**PRILOGA 1C**

# NASLOVNA STRAN NAČRTA

| | | |
|---|---|---|
| **PODATKI O GRADNJI** | | |
| naziv gradnje | | **SEVEROZAHODNA POKRITA TRIBUNA S POMOZNIMI PROSTORINA OBMOČJU STADIONA FAZANARIJA (FAZA 1- KONSTRUKCIJA NADSTREŠNICE IN OBJEKTA S POMOŽNIMI PROSTORI)** |
| kratek opis gradnje | | **Novogradnja severozahodne nadstrešnice s pomožnimi prostori (Objekt 1). PZI načrt obsega jekleno konstrukcijo nadstrešnice in pomožnega objekta s temelji in medetažo.** |
| VRSTE GRADNJE | ☑ | **NOVOGRADNJA - NOVOZGRAJEN OBJEKT** |
| *označiti vse ustrezne vrste gradnje* | ☐ | **NOVOGRADNJA - PRIZIDAVA** |
| | ☑ | **REKONSTRUKCIJA** |
| | ☐ | **SPREMEMBA NAMEMBNOSTI** |
| | ☐ | **ODSTRANITEV CELOTNEGA OBJEKTA** |
| | ☐ | **LEGALIZACIJA** |
| | ☐ | **MANJŠA REKONSTRUKCIJA** |
| **PODATKI O PROJEKTNI DOKUMENTACIJI** | | |
| vrsta dokumentacije | | **PZI - Projektna dokumentacija za izvedbo gradnje** |
| številka projekta | | **397/25** |
| **PODATKI O NAČRTU** | | |
| strokovno področje načrta | | |
| naziv načrta | | **2.1. Načrt s področja gradbeništva** |
| številka načrta | | **P02/2025** |
| datum izdelave | | **jun.25** |
| datum spremembe | | |
| **PODATKI O PROJEKTANTU NAČRTA** | | |
| projektant načrta (naziv družbe) | | **RAZPON d.o.o.** |
| naslov | | **Tehnološki park 20** |
| odgovorna oseba projektanta načrta | | **mag. Igor Gorup uni. dipl. ing. str.** |
| podpis odgovorne osebe projektanta načrta | | |
| **PODATKI O IZDELOVALCU NAČRTA** | | |
| ime in priimek pooblaščenega arhitekta, pooblaščenega inženirja | | **mag. Igor Gorup uni. dipl. ing. str.** |
| identifikacijska številka | | **G- 2458** |
| podpis pooblaščenega arhitekta, pooblaščenega inženirja | | mag. IGOR GORUP univ. dipl. inž. str. IZS G-2458 |

**PRILOGA 2C**

# IZJAVA PROJEKTANTA NAČRTA IN POOBLAŠČENEGA STOKOVNJAKA, KI JE IZDELAL NAČRT V PZI IN PID

| **PROJEKTANT NAČRTA** | |
|---|---|
| projektant načrta (naziv družbe) | **RAZPON d.o.o.** |
| naslov | **Tehnološki park 20, 1000 Ljubljana** |
| odgovorna oseba projektanta načrta | **mag. Igor Gorup dipl. ing. str.** |

| **IN POOBLAŠČENI STROKOVNJAK, KI JE IZDELAL NAČRT** | |
|---|---|
| pooblaščeni strokovnjak | **mag. Igor Gorup dipl. ing. str.** |

**IZJAVLJAVA:**

***da načrt***

| | |
|---|---|
| vrsta dokumentacije | **PZI- Projek za izvedbo** |
| strokovno področje načrta | **2.1 Načrt s področja gradbeništva** |
| naziv načrta | **Jeklena konstrukcija nadstrešnice s pomožnim objektom temelji** |
| številka načrta | **P02/2025** |
| datum izdelave | **jun.25** |

***upošteva relevantne predpise in druge normativne dokumente ter da so upoštevane ustrezne bistvene in druge zahteve.***

| | |
|---|---|
| pooblaščeni strokovnjak | **mag. Igor Gorup dipl. ing. str.** |
| identifikacijska številka | **G- 2458** |
| podpis pooblaščenega strokovnjaka | |
| odgovorna oseba projektanta načrta | **mag. Igor Gorup dipl. ing. str.** |
| podpis odgovorne osebe projektanta načrta | mag. IGOR GORUP univ. dipl. inž. str. IZS G-2458 |

# 2.2.1 KAZALO VSEBINE NAČRTA GRADBENIH KONSTRUKCIJ – JEKLENA IN SOVPREŽNA KONSTRUKCIJA, št. načrta P 02/2025

**2.2. 1 Kazalo vsebine načrta gradbenih konstrukcij**

**2.2. 2 Tehnično poročilo PZI**

**2.2. 3 PZI statični izračuni jeklenih in sovprežne konstrukcije, nadstrešnice tribun in objekta s pomožnimi prostori, ki sestoji :**

- **Statika profilov konstrukcije nadstrešnice in objekta**
- **Statika sovprežnega etažnega nosilca**
- **Statika sovprežnega stropa**
- **Statika strešne pločevine objekta**
- **Statika trapezne pločevine nadstrešnice**
- **Statika detajlov konstrukcij s prilogami**

**2.2. 4 Risbe jeklenih in sovprežne konstrukcije PZI**

# 2.2.2. TEHNIČNO POROČILO PZI

## 2.2.2.1 ZASNOVA JEKLENIH KONSTRUKCIJ IN SOVPREŽNE ETAŽNE KONSTRUKCIJE

Nove jeklene konstrukcije nadstrešnice tribun in pomožnih prostorov na severozahodnem delu štadiona, s sovprežno medetažno konstrukcijo, so predvidene v sklopu že obstoječe severne in zahodne nadstrešnice s tribunami nogometnega stadiona v Murski Soboti.
Nove konstrukcije so zasnovane tako, da predstavljajo dopolnitev k obstoječi AB konstrukciji tribun in obstoječi jekleni konstrukciji nadstrešnic severnega in zahodnega krila štadiona Fazanarija.
Nosilna konstrukcija nadstrešnic je prekrita z nosilno ločno trapezno pločevino, posebej izdelano v ta namen. Glavni nosilci nadstrešnice so zato zasnovani tako, da omogočajo tudi ustrezno odvodnjavanje iz strešne kritine in vzdrževanje odtočnega sistema, hkrati pa tudi arhitekturno in statično navezavo na konstrukcijo obeh obstoječih sosednjih nadstrešnic.
V nadaljevanju obstoječih AB tribun zahodnega krila je so predvideni dodatni pomožni prostori v pritličju in etaži z garderobami in ložami. Medetažna konstrukcija v tem delu je predvidena v enostavni lahki izvedbi kot sovprežni strop, ki sestoji iz trapezne pločevine in betonskega polnila v skupni debelini 12-13 cm. Po obodu tega dela objekta so predvidene zasteklitve in polne stene z izolacijskimi fasadnimi paneli z ustrezno jekleno podkonstrukcijo za odprtine oken in vrat.
Vse predvidene zunanje in notranje konstrukcije so zasnovane tako, da prenašajo zahtevane vertikalne stalne obtežbe, spremenljive snežne in koristne obtežbe, horizontalne vetrne in potresno obtežbo, ki pa zaradi lokacije objekta ni merodajna za dimenzioniranje. Statični račun prikazuje tudi te navedene trditve.
Fasadne konstrukcije so potrebne zato, da je mogoče ustrezno podpreti in vgraditi izolacijske fasadne panele ter vgraditi stavbno pohištvo(okna in vrata).
Vse jeklene konstrukcije se pri montaži sidra s pomočjo kemičnih oz. mehanskih sidr v nove AB temelje oziroma obstoječe betonske elemente tribun. Obstoječa sidranja in temelji se preverijo skladno z novimi zahtevami.
Gabariti posameznih konstrukcij so prilagojeni arhitekturno definiranim zahtevam dozidave objekta in izvedbi obstoječih tribun in so razvidni iz priloženih PZI načrtov .

## 2.2.2.2 JEKLENA IN SOVPREŽNA NOSILNA KONSTRUKCIJA – GARDEROBE VIP PROSTORI

Jeklena in sovprežna nosilna konstrukcija dela objekta za garderobe in odprti VIP prostori s sanitarijami od osi Gj-0 do Gj- 5 prenaša vse zunanje delujoče obtežbe, tako horizontalne sile, predvsem upoštevani potres, kot tudi vse vertikalne obtežbe (lastna + stalna in koristna obtežba medetaže) na nove in obstoječi AB temelje oz. stebre obstoječega dela zahodne nadstrešnice v osi Z0 . Konstrukcija je zasnovana kot sistem togo vpetih podpornih stebrov z vzdolžnimi primarnimi in sekundarnimi prečnimi etažnimi nosilci v ravnini etaže in enako tudi v ravnini ravne strehe z minimalnim naklonom objekta.

Notranji oz. tudi zunanji (pritličje) stebri so izdelani iz profilov HEA 200. V vzdolžni smeri stebre povezujejo primarni etažni nosilci, ki so med seboj in na stebre priključeni togo. Togo so priključeni tudi sredinski in notranji primarni etažni nosilci in sicer na zadnje oz. prednje stebre HEB 260 nosilnega okvirja nadstrešnice, ki predstavljajo tudi del nosilne konstrukcije opisanega objeta z garderobami in medetažo.
Med primarnimi nosilci etaže so členkasto vpeti sekundarni, sovprežno izvedeni etažni nosilci IPE 180, na katerih so varjeni sovprežni čepi 100 x 19 mm. Preko sovprežnih nosilcev je predviden sovprežni strop v skupni debelini 12,5 cm. Spodnja armatura stropne plošče je kar opažna sovprežna pločevina Cofrastra 60 (tudi z ustreznim $\tau$u,rd) , debeline 0,88 mm, v vsakem valu pločevine je dodatno predvidena armaturna palica fi 8 zgornja armatura preko vsega je armatura Q257, z zaščitnim slojem 25 mm, vse skladno s PZI načrtom.
Streha tega dela objekta je v srednjem delu zalomljena, ravna z minimalnim naklonom za odvodnjavanje in sestavi po arhitekturnem popisu. Sestoji iz primarnih vzdolžnih nosilcev
IPE 200 preko katerih je prečno položena nosilna strešna pločevina s trapezom 100/175/0,75 nanjo pa so položeni izolacijski sloji. Togost strešni konstrukciji z razliko od etažne konstrukcije, kjer je to sovprežni strop, dajejo horizontalna vzdolžna natezno tlačna povezja izdelana iz okroglih in kvadratnih cevi fi 76,1 x 3 oz. QR 80/4.
Za stabilizacijo konstrukcije v vzdolžni in prečni smeri je predvideno togo vpetje stebrov in hkrati še obe, etažna in strešna toga plošča.
Sidranje glavnih nosilnih stebrov HEB 260 je predvideno adhezivno kemično po izračunanih detajlih z 8 x navojnimi palicami M30, globine sidranja 600 mm in ustrezno predvideno dodatno strižno armaturo na mestih vpetja.
Sidranje glavnih nosilnih stebrov HEA 200 v AB temelje je izvedeno po sistemu adhezivnega montažnega sidranja s sidrno maso in navojnimi palicami M24 globine 480 mm.
Prenos vseh horizontalnih potresnih sil se v vzdolžni in prečni smeri vrši preko etažnih nosilcev in horizontalnih strešnih zavetrovanj na stebre in od tod na AB temeljno konstrukcijo objekta. Vertikalne sile se preko profilirane strešne pločevine oz sovprežne plošče prenašajo na primarne strešne oz. etažne nosilce, od tod pa preko stebrov HEB 260 oz. HEA 200 na temelje.
Za podkonstrukcije fasade in povezovalnega dela objekta z obstoječim so predvidene jeklene kvadratne cevi QR 80/ 4 oz. 120/5
Vsi elementi jeklene konstrukcije (stebri, nosilci in zavetrovanja) so izdelani tako, da jih je mogoče medsebojno stikovati preko vijačenih stikov in priključkov. Spojni vijaki, ki so predvideni za stikovanje nosilnih elementov so kvalitete 10.9 in 8.8. Pred napenjanje vijakov večjih dimenzij M16, M20 in M24 je navedeno v statičnem računu detajlov.

Glavni nosilni elementi jeklene nosilne konstrukcije objekta so izdelani iz materiala S355 JR (notranje konstrukcije), J0 ali J2. Vse kv. cevi pa so iz materiala S235 JR, J0 ali J2. Vsi materiali so skladni s standardom EN 10025.

Antikorozijska zaščita konstrukcije :

Atikorozijski razred zunanje konstrukcije C4 notranji vsaj C3. Predvideno je vroče cinkanje konstrukcije, skladno s standardom EN ISO 1461.

Deli zunanje konstrukcije pa se zaradi ujemanja z obstoječo jekleno konstrukcijo nadstrešnic lahko še dodatno barvajo z epoxi- primer in prekrivnim slojem v skupnem nanosu 40 mikronov.

### 2.2.2.3 JEKLENE NOSILNA KONSTRUKCIJA NADSTREŠNICE

Nosilna konstrukcije nadstrešnice je izdelana v obliki nosilnih okvirjev ki so v ravnem delu del objekta s pomožnimi in VIP prostori v krivinskem pa so razmeščeni v ustreznem radiusu, ki ga je podal arhitekt.

Statična zasnova je enaka kot že v obstoječem delu, torej so okvirji izdelani iz primarnih nosilnih stebrov HEB 260m na katerega se togo, na višini 7,65 m vpenjajo strešni nosilci.

Za povečano nosilnost so na zadnjem delu nosilcev predvideni še natezno, tlačni stebri, ki povečujejo stabilnost okvirja in horizontalnega strešnega nosilca. Nosilnost strešnega nosilca se dodatno povečuje še z dvema natezno tlačnima zategama izdelana iz okrogle cevi 168,3 x 6,3 , ki sta skupno vpeti na vrhu glavnega stebra HEB 260 in nato še posebej diagonalno na konec zadnjega dela nosilca in drugo tretjino konca prednjega dela strešnega nosilca .

Strešni nosilci so vijačeni na stebre togo, pod minimalnim naklonskim kotom zaradi ustreznega odvodnjavanja. Izdelani so iz profilov IPE 400 in s strani zaprti s pločevinami debelene 10 mm, kar povečuje njihovo stabilnost in nosilnost prereza, hkrati pa daje videz enotnosti z obstoječimi nosilci. Na vrhi sega pločevina preko zgornje pasnice IPE 400 tako, da je s tem oblikovana žlota in sidrišče za strešno trapezno pločevino, kot tudi za odvod meteorne vode s strehe nadstrešnice. Po dolžini se višina žlote spreminja in je rahlo konična zato, da je omogočeno ustrezno odvodnjavanje, ki je na sredini ob stebru največje. Tam je predvidena tudi meteorna vertikala.

Oblika in izvedba strešnega nosilca je natančno definirana v PZI načrtu.

Vsi glavni stebri okvirjev so togo vpeti v AB temelje in do nivoja zunanje ureditve tudi ob betonirani po ustreznem detajlu. Ta je pomembna vsled antikorozijske zaščite jeklenih stebrov, ki segajo pod nivo zunanje ureditve. Sekundarni ali natezni stebri okvirjev so sidrani v AB temelje členkasto. Stabilizacija okvirjev je zagotovljena s togim vpenjanjem v AB temelje, strešnih nosilcev pa z natezno tlačnimi palicami in zavetrovalnimi diagonalami, ki so izdelane iz okroglih cevi fi 101,6 x 4.

Preko strešnih nosilcev se na robove žlot ustrezno vijači visoko profilirana trapezna pločevina Legato 107 T= 1mm. Ta je oblikovana v strešnem loku, na ustrezen radius, tako da so ohranjene arhitekturne značilnosti obstoječe nadstrešnice.

Vsi elementi jeklene konstrukcije nadstrešnice (stebri, nosilci in zavetrovanja) so izdelani tako, da jih je mogoče medsebojno stikovati preko vijačenih stikov in priključkov. Spojni vijaki, ki so predvideni za stikovanje nosilnih elementov so kvalitete 8.8 oz. 10.9.

Prednapenjanje vijakov večjih dimenzij M16 in M20, M24 in M30 je navedeno v statičnem računu detajlov.
Glavni nosilni elementi jeklene nosilne konstrukcije nadstrešnice so izdelani iz materiala S355 J2. Vsi materiali so skladni s standardom EN 10025.
Antikorozijska zaščita konstrukcije :
Atikorozijski razred konstrukcije nadstrešnice je C4. Predvideno je vroče cinkanje konstrukcije, skladno s standardom EN ISO 1461.
Deli zunanje konstrukcije pa se zaradi ujemanja z obstoječo jekleno konstrukcijo nadstrešnic lahko še dodatno barvajo z epoxi- primer odsnovno barvo in prekrivnim slojem v skupnem nanosu 40 mikronov.

### 2.2.2.4 OBTEŽBE NA KONSTRUKCIJE

Pri projektiranju jeklenih konstrukcij fasade, strehe in nadstreška so bile privzete naslednje obtežbe:

1) **Stalne obtežbe**

- **Strop/streha (pomožni prostori)**
  Stalna obtežba je bila določena glede na podane arhitekturne sestave posameznih montažnih elementov in sicer :

| | |
|---|---|
| - Profilirana trapezna pločevina : | 0,13 kN/m2 |
| - Toplotna izolacija stropa : | 0,30 kN/m2 |
| - Ločilni sloj + hidroizol. Folija in PZ : | 0,05 kN/m2 |
| - Stropna obloga : | 0,25 kN/m2 |
| - Inštalacije : | 0,10 kN/m2 |
| - Predvidena fotovoltaika | 0,20 kN/m2 |
| **Streha + strop skupaj :** | **1.03 kN/m$^2$** |

- **Medetaža + strop skupaj :**
  Stalna obtežba je bila določena glede na podane arhitekturne sestave posameznih montažnih elementov in sicer :

| | |
|---|---|
| - Sovprežni strop s pločevino in čepi : | 2,40 kN/m2 |
| - Toplotna in hidroizolacija stropa : | 0,10 kN/m2 |
| - Estrih 6 cm | 1,50 kN/m2 |
| - Finalni tlaki – keramika + lepilo : | 0,20 kN/m2 |
| - Stropna obloga : | 0,30 kN/m2 |
| - Predelne stene : | 0,70 kN/m2 |
| - Inštalacije : | 0,10 kN/m2 |
| **Streha + strop skupaj :** | **5.30 kN/m$^2$** |

- **Streha nadstrešnica nad tribunami :**

- Profilirana trapezna pločevina : 0,15 kN/m2
- Inštalacije in osvetlitve : 0,10 kN/m2

Streha skupaj : 0.25 kN/m$^2$

- **Fasadne obloge :**
- Fasadne plošča TRIMO FTV 200 : 0,35 kN/m2
- Okna : 0,50 kN/m2
- Vrata : 0,30 kN/m2

**2) Koristna obtežba na medetažo (Prostor kjer se zadržujejo ljudje z mizami in stoli) :** 3,0 kN/m2

**3) Obtežba vetra**

- referenčna hitrost vetra na objekt: $v_b$ = 20.0 m/s
- kategorija terena: III. Kat.(industrijska c.)

**4) Obtežba Snega**

| | | | | |
|---|---|---|---|---|
| | $C_e$ = | 1,0 | | faktor izpostavljenosti (običajen teren) |
| | $C_t$ = | 1,0 | | toplotni koeficient |
| | $\mu_1$ = | 0,8 | | oblikovni koeficient obtežbe snega (odvisen od naklon in tipa strehe) |
| | A = | 190 | m | nadmorska višina |
| alpska cona A2 | $s_k$ = | 1,38 | kN/m$^2$ | karakteristična obtežba snega na tleh |
| | s = | $\mu_1 \cdot C_e \cdot C_t \cdot s_k$ | | |
| | **s =** | **1,10** | **kN/m$^2$** | karakteristična obtežba snega na strehi |

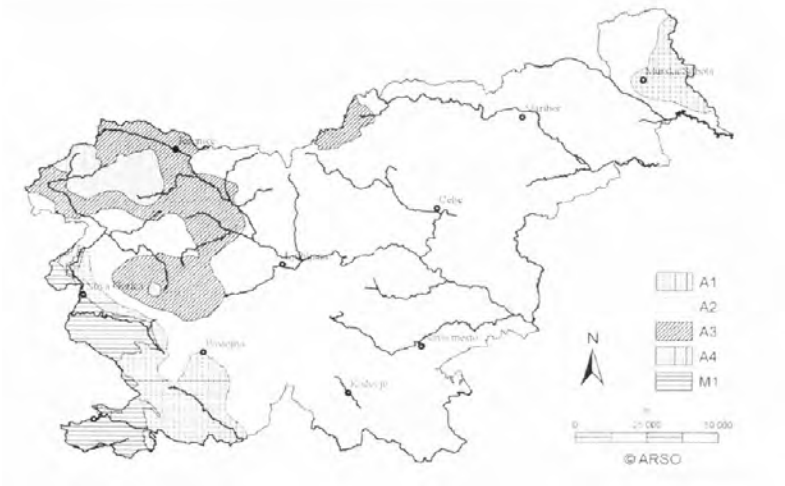

Glede na ločno obliko strešne kritine na nadstrešnici je privzeto kopičenje snega ob žlotah in v njih. Na večini strešine z minimalnim naklonom loka pa kopičenje ni predvideno. Kopičenje ob žlotah je predvideno s faktorjem $\mu 2$=1,2. V statičnem računu je za streho privzeta povprečna vrednost obtežbe kar pomeni 1,10 ($\mu$=0,8) + 1,66 ($\mu$=1,2)= 1,38 kN/m2 po celotni površini ločne strehe.

**5) Potresna obtežba**

| | |
|---|---|
| - projektni pospešek tal: | $a_g$ = 0.1 g |
| - vrsta tal po EC8 glede na preliminarno oceno: | C |
| - izbrani faktor obnašanja konstrukcije: | $q$ =1,5 |

## 2.2.2.5 STATIČNA ANALIZA KONSTRUKCIJ

Vsi nosilni elementi notranjih in zunanjih jeklenih in sovprežnih konstrukcije so izračunani skladno s standardom SIST EN 1993-1-1 po metodi mejnih stanj MSN (mejno stanje nosilnosti) in MSU (mejno stanje uporabnosti). Izdelana je globalna elastična analiza nosilnosti konstrukcije po teoriji II. reda GNIA z upoštevanjem globalnih nepopolnosti vseh primarnih stebrov in sistemskimi uklonskimi dolžinami. Za glavne nosilce nadstrešnice so upoštevane tudi izbočne sile.
Za vse glavne konstrukcijske elemente nadstrešnice in objekta so prikazani rezultati pomikov stebrov in nosilcev pri mejnem stanju uporabnosti MSU (karakteristična kombinacija vplivov) in potresni kombinaciji. Tabelarično so prikazane ovojnice notranjih statičnih količin v posameznih konstrukcijskih elementih pri trajnem oziroma potresnem projektnem stanju. Prikazana je izkoriščenost nosilnosti profilov celotne konstrukcije za mejno stanje nosilnosti MSN in pri potresnem projektnem stanju. Na vseh glavnih nosilnih elementih je narejena tudi ustrezna kontrola stabilnosti stebrov na uklon kot tudi kontrola bočne zvrnitve glavnih nosilcev. Izvedena je tudi kontrola upogibno torzijskega uklona stebrov. N akoncu je izvedena tudi stabilnostna kontrola celotne konstrukcije s podanimi kritičnimi faktorji

Pri modeliranju je bil uporabljen material jekla S235 JR, J0 ali J2, S 355 J0 skladno s standardom SIST EN 1993-1-1 : 2010-12.

## 2.2.2.6 DINAMIČNA ANALIZA KONSTRUKCIJ

Uporabljena metoda za določitev seizmičnih vplivov je metoda sil z uporabo projektnega spektra odziva ob upoštevanju razreda kvalitete zemljine C. Potresna analiza je narejena za smer X, Y in Z. za celotno konstrukcijo. V potresni analizi jeklene konstrukcije je bil upoštevan faktor pomembnosti objekta $\gamma_1$ = 1.0. Upoštevan faktor obnašanja konstrukcije

znaša q = 1.5 skladno s stopnjo duktilnosti DCL. Upoštevana je bila naključna ekscentričnost togosti in mase v obeh smereh (X in Y).

### 2.2.2.7 UPORABLJENA PROGRAMSKA OPREMA

Globalna statična in dinamična analiza konstrukcije sta bili izdelani s programskim paketom RSTAB in RFEM podjetja DLUBAL. Vsi spoji so bili izračunani s programom Idea Statica Steel Connection 24.0. Sidranje konstrukcij s sidrnimi ploščami in zvari je izračunano s programom HILTI – Profis.

### 2.2.2.8 UPORABLJENI STANDARDI IN LITERATURA

- SIST EN 1991-1-4 : 2005/oA101,oktober 2007
- SIST EN 1991-1-3 : 2004/oA101, oktober 2007
- SIST EN 1991-1-1 : 2004
- SIST EN 1993-1-1 : 2005
- SIST EN 1994-1-1 : 2005
- SIST EN 1998-1 : 2005
- SIST EN 1990 : 2004
- SIST EN 1993-1-8 : 2005
- -SIST EN 1090 1 in 2
- D. Beg, A. Pogačnik, Priročnik za projektiranje gradbenih konstrukcij po Evrokod standardih
- D. Beg, Projektiranje jeklenih konstrukcij po evropskem predstandardu ENV 1993-1-1
- Petersen ; »Stahlbau«

### 2.2.2.9 IZDELAVA IN MONTAŽA JEKLENIH KONSTRUKCIJ

Pri montaži vseh jeklenih konstrukcij objekta je potrebno upoštevati standard SIST EN 1090-1 in 2 za izdelavo in montažo nosilnih jeklenih konstrukcij. Elementi jeklene konstrukcije nadstrešnice sodijo v razred EXC 3, vse druge jeklene konstrukcije objekta sodijo v razred EXC2, kar je treba upoštevati pri kontroli kvalitete izdelave in montaže konstrukcij. Pri izdelavi je potrebno za konstrukcijo nadstrešnice upoštevati razred izdelave 2 za objekt pa razred izdelave 1 (SIST EN 1090-2, Anex B, tabela B.1)

Jeklene konstrukcije morajo biti izdelana skladno s projektno dokumentacijo, veljavnimi predpisi in standardi. Pri izdelavi posameznih elementov, je treba posebno pozornost posvetiti dimenzijski kontroli posameznih elementov in natančnosti izdelave detajlov, vse skladno s projektno dokumentacijo. Med izdelavo in montažo mora biti zagotovljena stalna merska kontrola elementov. Pred montažo jeklenih konstrukcij je treba zagotoviti potrebno

geodetsko vertikalnost vseh jeklenih stebrov nadstrešnice in objekta, vse vijake je treba med montažo jeklenih konstrukcij ustrezno pritegniti in zagotoviti zavarovanje proti odvitju. (glej statiko detajlov konstrukcije str.3) Med izdelavo in montažo mora biti zagotovljen tudi ustrezni strokovni nadzor, ki ga izvaja strokovnjak za jeklene konstrukcije, pooblaščen s strani pristojne inštitucije. Pred pričetkom montaže je treba ponovno preveriti geometrijsko natančnost izdelave AB temeljne in obstoječe AB konstrukcije objekta.

Pri montaži kemičnih sider je še posebej pomembna izvedba kemičnega adhezivnega sidranja stebrov jeklene konstrukcije na AB temelje objekta oziroma na AB elemente konstrukcije objekta, pri čemer je treba dosledno upoštevati vsa navodila proizvajalca sidrnih elementov, ki morajo izvesti tudi kontrolo pri montaži sidranja.

Ljubljana, junij 2025

Odgovorni projektant konstrukcije:

Mag. Igor Gorup dipl.ing. str.

mag. IGOR GORUP
univ. dipl. inž. str.
IZS G-2458

# 2.2.3 STATIČNI IZRAČUN JEKLENIH KONSTRUKCIJ IN SOVPREŽNE MEDETAŽNE KONSTRUKCIJE

- **Statika profilov konstrukcije nadstrešnice in objekta**
- **Statika sovprežnega etažnega nosilca**
- **Statika sovprežnega stropa**
- **Statika strešne pločevine objekta**
- **Statika trapezne pločevine nadstrešnice**
- **Statika detajlov konstrukcij s prilogami**

# 2.2.4. PZI RISBE JEKLENIH IN SOVPREŽNE KONSTRUKCIJE

# STRUCTURAL ANALYSIS

**PROJECT**

## SEVOROZAHODNA TRIBUNA S POMOŽNIMI PROSTORI NA OBMOCJU STADIONA FAZANARIJA

**CLIENT**

## MESTA OBCINA MURSKA SOBOTA
Kardoševa 2,
9000 MURSKA SOBOTA

**CREATED BY**

**RAZPON d.o.o.**
Tehnološki park 20, 1000 Ljubljana
mag. Igor Gorup dipl. ing. str. G-2458

Isometric

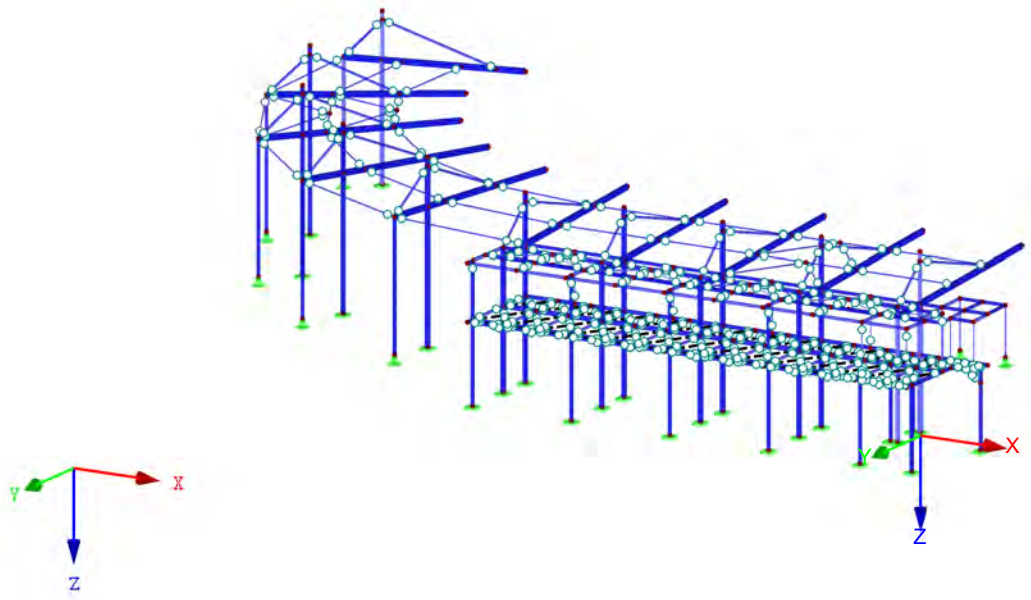

# CONTENTS


| | | |
|---|---|---|
| | Model - General Data | 2 |
| **1** | **Model** | |
| 1.2 | Materials | 3 |
| 1.3 | Cross-Sections | 3 |
| 1.4 | Member Hinges | 4 |
| 1.5/1 | Member Eccentricities - Absolute | 4 |
| 1.5/2 | Member Eccentricities - Relative | 4 |
| 1.8 | Nodal Supports | 4 |
| Graphic | Dispozicija podpor konstrukcije, Perspective | 5 |
| **2** | **Load Cases and Combinations** | |
| 2.1 | Load Cases | 6 |
| 2.1.4 | Load Cases - Parameters for CQC Rule | 6 |
| 2.5 | Load Combinations | 6 |
| 2.6 | Result Combinations | 15 |
| 2.6.2 | Result Combinations - Calculation Parameters | 16 |
| **3** | **Loads** | |
| | LC1 - stalna - 3.2 Member Loads | 16 |
| | LC1 - stalna - 3.5 Generated Loads | 16 |
| Graphic | Loads - Stalna G., LC1: stalna, Perspective | 20 |
| | LC2 - koristna etaža - 3.5 Generated Loads | 21 |
| Graphic | Loads - Koristna Q, LC2: koristna etaža, Perspective | 22 |
| | LC3 - sneg 1 - 3.2 Member Loads | 23 |
| | LC3 - sneg 1 - 3.5 Generated Loads | 23 |
| Graphic | LC3 - Sneg_1, LC3: sneg 1, Perspective | 26 |
| | LC4 - sneg 2 - 3.2 Member Loads | 27 |
| | LC4 - sneg 2 - 3.5 Generated Loads | 27 |
| Graphic | Loads - Sneg 2- kopicenje, LC4: sneg 2, Perspective | 29 |
| | LC5 - veter + - 3.2 Member Loads | 30 |
| | LC5 - veter + - 3.5 Generated Loads | 30 |
| Graphic | Loads - Veter +, LC5: veter +, Perspective | 33 |
| | LC6 - veter - - 3.2 Member Loads | 34 |
| | LC6 - veter - - 3.5 Generated Loads | 34 |
| Graphic | Loads - Veter -, LC6: veter -, Perspective | 37 |
| | LC7 - izboène sile + - 3.2 Member Loads | 38 |
| Graphic | Loads - Izbocne sile +, LC7: izboène sile +, Perspective | 39 |
| Graphic | Loads - Izbocne sile -, LC8: izboène sile -, Perspective | 40 |
| | LC8 - izboène sile - - 3.2 Member Loads | 41 |
| | LC9 - 3.1 Nodal Loads - By Components - Coordinate System | 41 |
| | LC10 - 3.1 Nodal Loads - By Components - Coordinate System | 43 |
| | LC11 - 3.1 Nodal Loads - By Components - Coordinate System | 45 |
| | LC12 - 3.1 Nodal Loads - By Components - Coordinate System | 48 |
| | LC13 - 3.1 Nodal Loads - By Components - Coordinate System | 50 |
| | LC14 - 3.1 Nodal Loads - By Components - Coordinate System | 53 |
| | LC15 - 3.1 Nodal Loads - By Components - Coordinate System | 55 |
| | LC16 - 3.1 Nodal Loads - By Components - Coordinate System | 57 |
| | LC17 - 3.1 Nodal Loads - By Components - Coordinate System | 60 |
| | LC18 - 3.1 Nodal Loads - By Components - Coordinate System | 62 |
| **4** | **Results - Load Cases, Load Combinations** | |
| 4.0 | Results - Summary | 65 |
| 4.3 | Cross-Sections - Internal Forces | 67 |
| | **Results - Result Combinations** | |
| 4.3 | Cross-Sections - Internal Forces | 71 |
| Graphic | Pomiki stebrov konsrukcije pri potresni kombinaciji, RC10: GZT (EQU) - Erdbeben, Perspective | 75 |
| Graphic | Pomiki stebrov konstrukcije pri MSU - karakteristicna kombinacija, RC12: GZG - Charakteristisch, Perspective | 76 |
| Graphic | Pomiki glavnih nosilcev nadstrešnice Uz pri MSU - karakt. kombinacija, RC12: GZG - Charakteristisch, Perspective | 77 |
| Graphic | Pomiki glavnih strešnih nosilcev Uz nadstrešnice pri potresni kombinaciji , RC10: GZT (EQU) - Erdbeben, Perspective | 78 |
| Graphic | Vertikalni pomiki strešnih in etažnih nosilcev objekta, RC12: GZG - Charakteristisch, Perspective | 79 |
| Graphic | Sekundarni fasadni stebri - Pomiki pri MSU, RC12: GZG - Charakteristisch, Perspective | 80 |
| Graphic | Sekundarni in fasadni stebri - Pomiki pri potresni kombinaciji, RC10: GZT (EQU) - Erdbeben, Perspective | 81 |
| | **STEEL EC3** | |
| | **CA1 - Bemessung nach Eurocode 3** | |
| 1.1 | General Data | 82 |
| 1.2 | Materials | 82 |
| 1.3 | Cross-Sections | 82 |
| 1.5 | Effective Lengths - Members | 82 |
| 2.2 | Design by Cross-Section | 87 |
| Graphic | STAHL EC3 FA1 - Glavni strešni nosilci- Dimenzioniranje na ovojnico MSN, Perspective | 96 |
| Graphic | STAHL EC3 FA1 - Glavni stebri konstrukcije - Dimenzioniranje na ovojnico MSN, Perspective | 97 |
| Graphic | STAHL EC3 FA1 - Strešni in etažni nosilci objeta - dimenzioniranje na ovonico MSN, Perspective | 98 |
| Graphic | STAHL EC3 FA1 - Glavne nosilne natezno tlacne diagonale- Dimenzioniranje na MSN , Perspective | 99 |
| Graphic | STAHL EC3 FA1 - Strešne vezi in tlacne povezave- Dimenzioniranje na MSN, Perspective | 100 |
| Graphic | STAHL EC3 FA1 - Sekundarni in fasadni stebri - Dimenzioniranje na ovojnico MSN, Perspective | 101 |
| | **CA2 - Bemessung nach Eurocode 3-Potres** | |
| 1.1 | General Data | 102 |
| 1.2 | Materials | 102 |
| 1.3 | Cross-Sections | 102 |
| 1.5 | Effective Lengths - Members | 102 |
| 2.2 | Design by Cross-Section | 107 |
| Graphic | STAHL EC3 FA2 - Glavni strešni nosilc Dimenzioniranje na potresno kombinacijo, Perspective | 114 |
| Graphic | STAHL EC3 FA2 - Glavni stebri konstrukcije - Dimenzioniranje na potresno kombinacijo, Perspective | 115 |
| Graphic | STAHL EC3 FA2 - Strešni in etažni nosilci objekta - Dimenzioniranje na potresno kombinacijo, Perspective | 116 |
| Graphic | STAHL EC3 FA2 - Glavne nosilne natezno tlacne diagonale nadstrešnice - Dimenzioniranje na pot. komb., Perspective | 117 |
| Graphic | STAHL EC3 FA2 - Strešne vezi in tlacne povezave - Dimenzioniranje na potresno kombinacijo, Perspective | 118 |
| Graphic | STAHL EC3 FA2 - Sekundarni in fasadni stebri- Dimenzioniranje na potresno kombinacijo, Perspective | 119 |
| | **RS-DYNAM** | |
| 1.1 | General Data | 120 |
| 1.2.2 | Additional Member Masses | 120 |
| 1.7 | Equivalent Lateral Forces | 121 |
| | Standard Parameters - EN 1998-1:2010 SIST - Slowenien (Design spectrum) | 121 |
| Graphic | Response spectrum in direction X | 121 |
| Graphic | Response spectrum in direction Y | 122 |
| Graphic | Response spectrum in direction Z | 122 |
| | Factors for spectrum | 122 |
| | Allocation of design spectrum | 122 |
| | **RSBUCK** | |
| 1.1 | General Data | 123 |
| 2.3 | Critical Load Factors | 123 |


# MODEL - GENERAL DATA

| | | | | |
|---|---|---|---|---|
| | General | Model name | : | Stadion_Fazanerija_JK-6_BR |
| | | Project name | : | Kalamar_Fazanarija |
| | | Type of model | : | 3D |
| | | Positive direction of global axis Z | : | Downward |
| | | Classification of load cases and combinations | : | According to Standard: EN 1990<br>National Annex: SIST - Slowenien |
| | | ☒Automatically create combinations | : | ☒Load Combinations |
| | Options | ☐ Use CQC Rule | | |
| | | ☐ Enable CAD/BIM model | | |
| | | Standard Gravity | | |
| | | g | : | 10.00 m/s² |

## 1.2 MATERIALS

| Matl. No. | Modulus E [kN/cm²] | Modulus G [kN/cm²] | Spec. Weight γ [kN/m³] | Coeff. of Th. Exp. α [1/°C] | Partial Factor $\gamma_M$ [-] | Material Model |
|---|---|---|---|---|---|---|
| 1 | Steel S 235 \| EN 1993-1-1:2005-05 | | | | | |
| | 21000.00 | 8076.92 | 78.50 | 1.20E-05 | 1.00 | Isotropic Linear Elastic |
| 2 | Steel S 355 \| EN 1993-1-1:2005-05 | | | | | |
| | 21000.00 | 8076.92 | 78.50 | 1.20E-05 | 1.00 | Isotropic Linear Elastic |

## 1.3 CROSS-SECTIONS

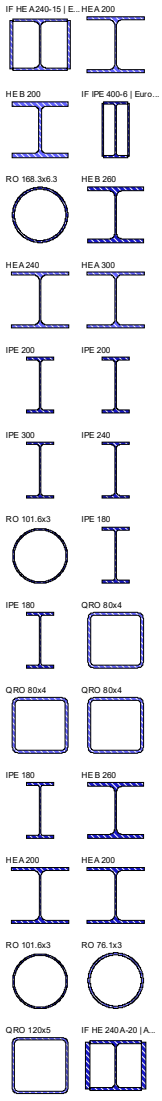


| Section No. | Matl. No. | J [cm⁴] / A [cm²] | $I_y$ [cm⁴] / $A_y$ [cm²] | $I_z$ [cm⁴] / $A_z$ [cm²] | Principal Axes α [°] | Rotation α' [°] | Overall Dimensions [mm] Width b | Height h |
|---|---|---|---|---|---|---|---|---|
| 1 | IF HE A 240-15 \| Euronorm 53-62 | | | | | | | |
| | 1 | 17348.53 | 10350.06 | 13413.85 | 0.00 | 0.00 | 270.0 | 230.0 |
| | | 142.20 | 53.07 | 70.30 | | | | |
| 2 | HE A 200 \| Euronorm 53-62 | | | | | | | |
| | 1 | 21.10 | 3690.00 | 1340.00 | 0.00 | 0.00 | 200.0 | 190.0 |
| | | 53.80 | 33.30 | 10.77 | | | | |
| 3 | HE B 200 \| Euronorm 53-62 | | | | | | | |
| | 1 | 59.50 | 5700.00 | 2000.00 | 0.00 | 0.00 | 200.0 | 200.0 |
| | | 78.10 | 50.04 | 15.35 | | | | |
| 4 | IF IPE 400-6 \| Euronorm 19-57 | | | | | | | |
| | 2 | 13166.58 | 28903.62 | 5332.80 | 0.00 | 0.00 | 192.0 | 400.0 |
| | | 130.88 | 26.17 | 77.34 | | | | |
| 5 | RO 168.3x6.3 \| EN 10219-2:2006 | | | | | | | |
| | 2 | 2107.00 | 1053.00 | 1053.00 | 0.00 | 0.00 | 168.3 | 168.3 |
| | | 32.10 | 15.99 | 15.99 | | | | |
| 6 | HE B 260 \| Euronorm 53-62 | | | | | | | |
| | 2 | 124.00 | 14920.00 | 5130.00 | 0.00 | 0.00 | 260.0 | 260.0 |
| | | 118.00 | 75.81 | 22.44 | | | | |
| 7 | HE A 240 \| Euronorm 53-62 | | | | | | | |
| | 1 | 41.70 | 7760.00 | 2770.00 | 0.00 | 0.00 | 240.0 | 230.0 |
| | | 76.80 | 47.96 | 15.10 | | | | |
| 8 | HE A 300 \| Euronorm 53-62 | | | | | | | |
| | 1 | 85.60 | 18260.00 | 6310.00 | 0.00 | 0.00 | 300.0 | 290.0 |
| | | 113.00 | 69.89 | 21.83 | | | | |
| 9 | IPE 200 \| Euronorm 19-57 | | | | | | | |
| | 2 | 7.02 | 1940.00 | 142.00 | 0.00 | 0.00 | 100.0 | 200.0 |
| | | 28.50 | 14.23 | 10.35 | | | | |
| 10 | IPE 200 \| Euronorm 19-57 | | | | | | | |
| | 2 | 7.02 | 1940.00 | 142.00 | 0.00 | 0.00 | 100.0 | 200.0 |
| | | 28.50 | 14.23 | 10.35 | | | | |
| 11 | IPE 300 \| Euronorm 19-57 | | | | | | | |
| | 2 | 20.20 | 8360.00 | 604.00 | 0.00 | 0.00 | 150.0 | 300.0 |
| | | 53.80 | 26.81 | 19.82 | | | | |
| 12 | IPE 240 \| Euronorm 19-57 | | | | | | | |
| | 2 | 12.90 | 3890.00 | 284.00 | 0.00 | 0.00 | 120.0 | 240.0 |
| | | 39.10 | 19.65 | 13.82 | | | | |
| 13 | RO 101.6x3 \| EN 10219-2:2006 | | | | | | | |
| | 2 | 226.00 | 113.00 | 113.00 | 0.00 | 0.00 | 101.6 | 101.6 |
| | | 9.29 | 4.63 | 4.63 | | | | |
| 14 | IPE 180 \| Euronorm 19-57 | | | | | | | |
| | 2 | 4.80 | 1320.00 | 101.00 | 0.00 | 0.00 | 91.0 | 180.0 |
| | | 23.90 | 12.19 | 8.76 | | | | |
| 15 | IPE 180 \| Euronorm 19-57 | | | | | | | |
| | 2 | 4.80 | 1320.00 | 101.00 | 0.00 | 0.00 | 91.0 | 180.0 |
| | | 23.90 | 12.19 | 8.76 | | | | |
| 16 | QRO 80x4 \| EN 10219-2:2006 | | | | | | | |
| | 1 | 180.00 | 111.00 | 111.00 | 0.00 | 0.00 | 80.0 | 80.0 |
| | | 11.70 | 5.13 | 5.13 | | | | |
| 18 | QRO 80x4 \| EN 10219-2:2006 | | | | | | | |
| | 1 | 180.00 | 111.00 | 111.00 | 0.00 | 0.00 | 80.0 | 80.0 |
| | | 11.70 | 5.13 | 5.13 | | | | |
| 19 | QRO 80x4 \| EN 10219-2:2006 | | | | | | | |
| | 1 | 180.00 | 111.00 | 111.00 | 0.00 | 0.00 | 80.0 | 80.0 |
| | | 11.70 | 5.13 | 5.13 | | | | |
| 20 | IPE 180 \| Euronorm 19-57 | | | | | | | |
| | 2 | 4.80 | 1320.00 | 101.00 | 0.00 | 0.00 | 91.0 | 180.0 |
| | | 23.90 | 12.19 | 8.76 | | | | |
| 21 | HE B 260 \| Euronorm 53-62 | | | | | | | |
| | 2 | 124.00 | 14920.00 | 5130.00 | 0.00 | 0.00 | 260.0 | 260.0 |
| | | 118.00 | 75.81 | 22.44 | | | | |
| 22 | HE A 200 \| Euronorm 53-62 | | | | | | | |
| | 2 | 21.10 | 3690.00 | 1340.00 | 0.00 | 0.00 | 200.0 | 190.0 |
| | | 53.80 | 33.30 | 10.77 | | | | |
| 23 | HE A 200 \| Euronorm 53-62 | | | | | | | |
| | 2 | 21.10 | 3690.00 | 1340.00 | 0.00 | 0.00 | 200.0 | 190.0 |
| | | 53.80 | 33.30 | 10.77 | | | | |
| 24 | RO 101.6x3 \| EN 10219-2:2006 | | | | | | | |
| | 2 | 226.00 | 113.00 | 113.00 | 0.00 | 0.00 | 101.6 | 101.6 |
| | | 9.29 | 4.61 | 4.61 | | | | |
| 25 | RO 76.1x3 \| EN 10219-2:2006 | | | | | | | |
| | 1 | 92.20 | 46.10 | 46.10 | 0.00 | 0.00 | 76.1 | 76.1 |
| | | 6.89 | 3.42 | 3.42 | | | | |
| 26 | QRO 120x5 \| EN 10219-2:2006 | | | | | | | |
| | 1 | 778.00 | 485.00 | 485.00 | 0.00 | 0.00 | 120.0 | 120.0 |
| | | 22.40 | 9.69 | 9.69 | | | | |
| 27 | IF HE 240 A-20 \| ArcelorMittal (EN 10365:2017) | | | | | | | |
| | 2 | 19868.67 | 11216.41 | 17534.87 | 0.00 | 0.00 | 280.0 | 230.0 |
| | | 164.00 | 55.58 | 85.33 | | | | |

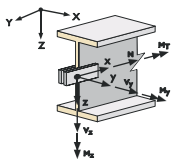

## 1.4 MEMBER HINGES

| Release No. | Reference System | Force Release or Spring [kN/m] $u_x$ | $u_y$ | $u_z$ | Moment Release or Spring [kNm/rad] $\varphi_x$ | $\varphi_y$ | $\varphi_z$ |
|---|---|---|---|---|---|---|---|
| 1 | Local x,y,z | ☐ | ☐ | ☐ | ☐ | ☒ | ☒ |
| | Nonlinearity | - | - | - | - | - | - |

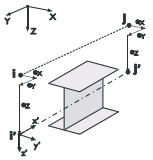

## 1.5/1 MEMBER ECCENTRICITIES - ABSOLUTE

| Ecc. No. | Reference System | Member Start - Eccentricity [mm] $e_{i,X}$ | $e_{i,Y}$ | $e_{i,Z}$ | Member End - Eccentricity $e_{j,X}$ | $e_{j,Y}$ | $e_{j,Z}$ | Comment |
|---|---|---|---|---|---|---|---|---|
| 1 | Global | 0.0 | 0.0 | 0.0 | 0.0 | 0.0 | 0.0 | |

## 1.5/2 MEMBER ECCENTRICITIES - RELATIVE

| Ecc. No. | Cross-Section Alignment y-Axis | z-Axis | Transverse offset from cross-section of another obj. Object Type | Object No. | y-Axis | z-Axis | Axial offset from adjacent Member Sta | Member End |
|---|---|---|---|---|---|---|---|---|
| 1 | Middle | Middle | None | 0 | Middle | Middle | ☐ | ☐ |

## 1.8 NODAL SUPPORTS

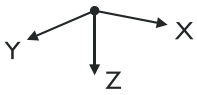


| Support No. | Nodes No. | Sequen. | Rotation [°] about X | about Y | about Z | Column in Z | Support Conditions $u_{X'}$ | $u_{Y'}$ | $u_{Z'}$ | $\varphi_{X'}$ | $\varphi_{Y'}$ | $\varphi_{Z'}$ |
|---|---|---|---|---|---|---|---|---|---|---|---|---|
| 1 | 2,4,6,8, 10-29 | XYZ | 0.00 | 0.00 | 0.00 | ☐ | ☒ | ☒ | ☒ | ☒ | ☒ | ☒ |
| 2 | 1,3,5,7,9, 1423,1429 | XYZ | 0.00 | 0.00 | 0.00 | ☐ | ☒ | ☒ | ☒ | ☐ | ☐ | ☒ |

# DISPOZICIJA PODPOR KONSTRUKCIJE

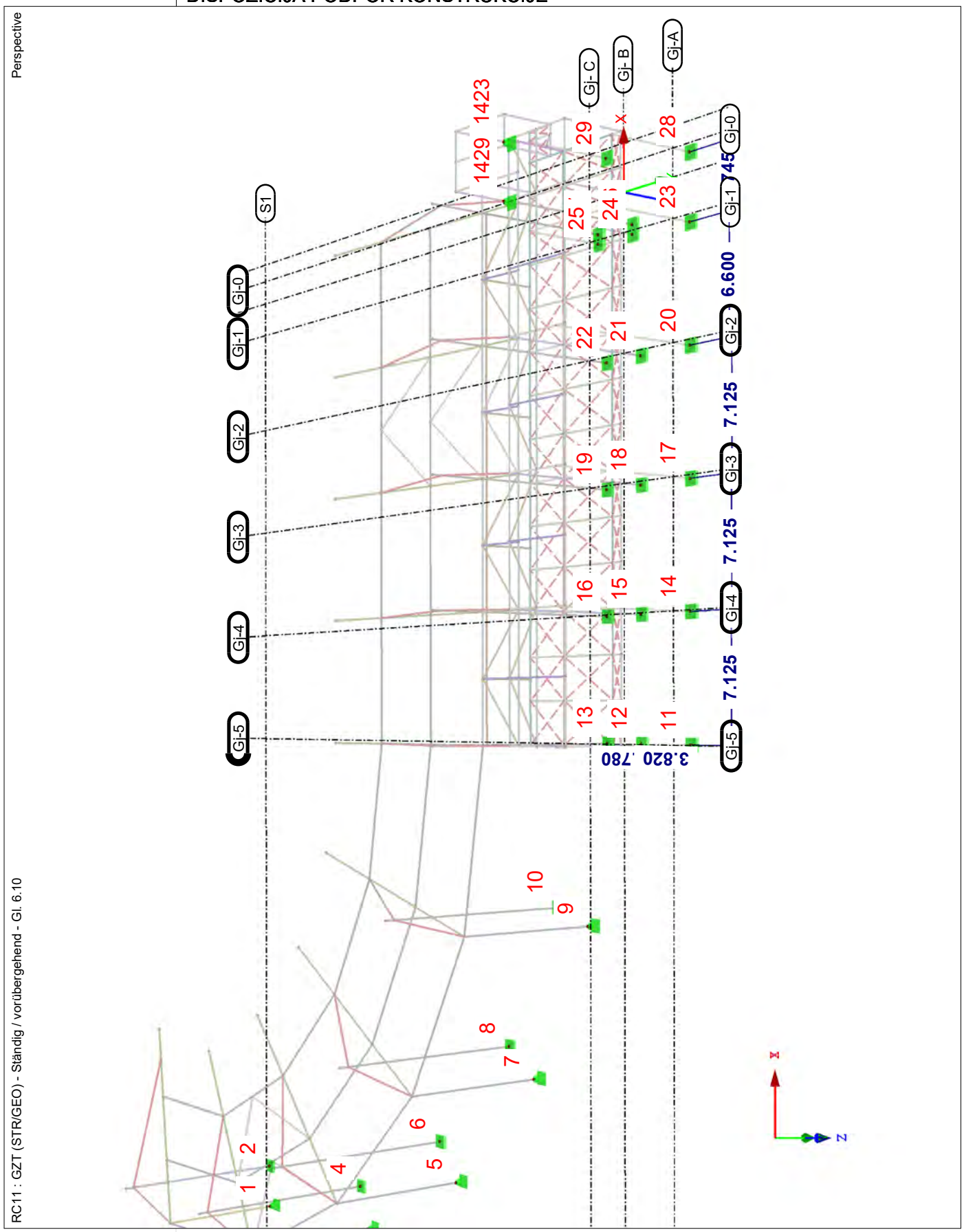

## 2.1 LOAD CASES

| Load Case | Load Case Description | EN 1990 \| SIST Action Category | Self-Weight - Factor in Direction Active | X | Y | Z |
|---|---|---|---|---|---|---|
| LC1 | stalna | Permanent | ☒ | 0.000 | 0.000 | 1.000 |
| LC2 | koristna etaža | Imposed - Category C: congregation areas | ☐ | | | |
| LC3 | sneg 1 | Snow (H ≤ 1000 m a.s.l.) | ☐ | | | |
| LC4 | sneg 2 | Snow (H ≤ 1000 m a.s.l.) | ☐ | | | |
| LC5 | veter + | Wind | ☐ | | | |
| LC6 | veter - | Wind | ☐ | | | |
| LC7 | izboène sile + | Imperfection | ☐ | | | |
| LC8 | izboène sile - | Imperfection | ☐ | | | |
| LC9 | Ersatzlasten aus Eigenform Nr. 1 - 0.85 Hz | Earthquake | ☐ | | | |
| LC10 | Ersatzlasten aus Eigenform Nr. 2 - 0.95 Hz | Earthquake | ☐ | | | |
| LC11 | Ersatzlasten aus Eigenform Nr. 3 - 1.02 Hz | Earthquake | ☐ | | | |
| LC12 | Ersatzlasten aus Eigenform Nr. 4 - 1.17 Hz | Earthquake | ☐ | | | |
| LC13 | Ersatzlasten aus Eigenform Nr. 5 - 1.40 Hz | Earthquake | ☐ | | | |
| LC14 | Ersatzlasten aus Eigenform Nr. 6 - 1.42 Hz | Earthquake | ☐ | | | |
| LC15 | Ersatzlasten aus Eigenform Nr. 7 - 1.49 Hz | Earthquake | ☐ | | | |
| LC16 | Ersatzlasten aus Eigenform Nr. 8 - 2.08 Hz | Earthquake | ☐ | | | |
| LC17 | Ersatzlasten aus Eigenform Nr. 9 - 2.08 Hz | Earthquake | ☐ | | | |
| LC18 | Ersatzlasten aus Eigenform Nr. 10 - 2.26 Hz | Earthquake | ☐ | | | |

## 2.1.4 LOAD CASES - PARAMETERS FOR CQC RULE

| Load Case | Load Case Description | Angular Frequency [rad/s] | Lehr's damping [-] |
|---|---|---|---|
| LC9 | Ersatzlasten aus Eigenform Nr. 1 - 0.85 Hz | 1.00 | 0.000 |
| LC10 | Ersatzlasten aus Eigenform Nr. 2 - 0.95 Hz | 1.00 | 0.000 |
| LC11 | Ersatzlasten aus Eigenform Nr. 3 - 1.02 Hz | 1.00 | 0.000 |
| LC12 | Ersatzlasten aus Eigenform Nr. 4 - 1.17 Hz | 1.00 | 0.000 |
| LC13 | Ersatzlasten aus Eigenform Nr. 5 - 1.40 Hz | 1.00 | 0.000 |
| LC14 | Ersatzlasten aus Eigenform Nr. 6 - 1.42 Hz | 1.00 | 0.000 |
| LC15 | Ersatzlasten aus Eigenform Nr. 7 - 1.49 Hz | 1.00 | 0.000 |
| LC16 | Ersatzlasten aus Eigenform Nr. 8 - 2.08 Hz | 1.00 | 0.000 |
| LC17 | Ersatzlasten aus Eigenform Nr. 9 - 2.08 Hz | 1.00 | 0.000 |
| LC18 | Ersatzlasten aus Eigenform Nr. 10 - 2.26 Hz | 1.00 | 0.000 |

## 2.5 LOAD COMBINATIONS

| Load Combin. | DS | Load Combination Description | No. | Factor | Load Case | |
|---|---|---|---|---|---|---|
| CO1 | STR | 1.35G + Imp1 | 1 | 1.35 | LC1 | stalna |
| | | | 2 | 1.00 | LC7 | izboène sile + |
| CO2 | STR | 1.35G + Imp2 | 1 | 1.35 | LC1 | stalna |
| | | | 2 | 1.00 | LC8 | izboène sile - |
| CO3 | STR | 1.35G + 1.5QiC + Imp1 | 1 | 1.35 | LC1 | stalna |
| | | | 2 | 1.50 | LC2 | koristna etaža |
| | | | 3 | 1.00 | LC7 | izboène sile + |
| CO4 | STR | 1.35G + 1.5QiC + Imp2 | 1 | 1.35 | LC1 | stalna |
| | | | 2 | 1.50 | LC2 | koristna etaža |
| | | | 3 | 1.00 | LC8 | izboène sile - |
| CO5 | STR | 1.35G + 1.5QiC + 0.75Qs1 + Imp1 | 1 | 1.35 | LC1 | stalna |
| | | | 2 | 1.50 | LC2 | koristna etaža |
| | | | 3 | 0.75 | LC3 | sneg 1 |
| | | | 4 | 1.00 | LC7 | izboène sile + |
| CO6 | STR | 1.35G + 1.5QiC + 0.75Qs1 + Imp2 | 1 | 1.35 | LC1 | stalna |
| | | | 2 | 1.50 | LC2 | koristna etaža |
| | | | 3 | 0.75 | LC3 | sneg 1 |
| | | | 4 | 1.00 | LC8 | izboène sile - |
| CO7 | STR | 1.35G + 1.5QiC + 0.75Qs2 + Imp1 | 1 | 1.35 | LC1 | stalna |
| | | | 2 | 1.50 | LC2 | koristna etaža |
| | | | 3 | 0.75 | LC4 | sneg 2 |
| | | | 4 | 1.00 | LC7 | izboène sile + |
| CO8 | STR | 1.35G + 1.5QiC + 0.75Qs2 + Imp2 | 1 | 1.35 | LC1 | stalna |
| | | | 2 | 1.50 | LC2 | koristna etaža |
| | | | 3 | 0.75 | LC4 | sneg 2 |
| | | | 4 | 1.00 | LC8 | izboène sile - |
| CO9 | STR | 1.35G + 1.5QiC + 0.75Qs1 + 0.9Qw1 + Imp1 | 1 | 1.35 | LC1 | stalna |
| | | | 2 | 1.50 | LC2 | koristna etaža |
| | | | 3 | 0.75 | LC3 | sneg 1 |
| | | | 4 | 0.90 | LC5 | veter + |
| | | | 5 | 1.00 | LC7 | izboène sile + |
| CO10 | STR | 1.35G + 1.5QiC + 0.75Qs1 + 0.9Qw1 + Imp2 | 1 | 1.35 | LC1 | stalna |
| | | | 2 | 1.50 | LC2 | koristna etaža |
| | | | 3 | 0.75 | LC3 | sneg 1 |
| | | | 4 | 0.90 | LC5 | veter + |
| | | | 5 | 1.00 | LC8 | izboène sile - |
| CO11 | STR | 1.35G + 1.5QiC + 0.75Qs1 + 0.9Qw2 + Imp1 | 1 | 1.35 | LC1 | stalna |
| | | | 2 | 1.50 | LC2 | koristna etaža |
| | | | 3 | 0.75 | LC3 | sneg 1 |
| | | | 4 | 0.90 | LC6 | veter - |
| | | | 5 | 1.00 | LC7 | izboène sile + |

## 2.5 LOAD COMBINATIONS

| Load Combin. | DS | Load Combination Description | No. | Factor | Load Case |
|---|---|---|---|---|---|
| CO12 | STR | 1.35G + 1.5QiC + 0.75Qs1 + 0.9Qw2 + Imp2 | 1 | 1.35 | LC1 stalna |
| | | | 2 | 1.50 | LC2 koristna etaža |
| | | | 3 | 0.75 | LC3 sneg 1 |
| | | | 4 | 0.90 | LC6 veter - |
| | | | 5 | 1.00 | LC8 izboène sile - |
| CO13 | STR | 1.35G + 1.5QiC + 0.75Qs2 + 0.9Qw1 + Imp1 | 1 | 1.35 | LC1 stalna |
| | | | 2 | 1.50 | LC2 koristna etaža |
| | | | 3 | 0.75 | LC4 sneg 2 |
| | | | 4 | 0.90 | LC5 veter + |
| | | | 5 | 1.00 | LC7 izboène sile + |
| CO14 | STR | 1.35G + 1.5QiC + 0.75Qs2 + 0.9Qw1 + Imp2 | 1 | 1.35 | LC1 stalna |
| | | | 2 | 1.50 | LC2 koristna etaža |
| | | | 3 | 0.75 | LC4 sneg 2 |
| | | | 4 | 0.90 | LC5 veter + |
| | | | 5 | 1.00 | LC8 izboène sile - |
| CO15 | STR | 1.35G + 1.5QiC + 0.75Qs2 + 0.9Qw2 + Imp1 | 1 | 1.35 | LC1 stalna |
| | | | 2 | 1.50 | LC2 koristna etaža |
| | | | 3 | 0.75 | LC4 sneg 2 |
| | | | 4 | 0.90 | LC6 veter - |
| | | | 5 | 1.00 | LC7 izboène sile + |
| CO16 | STR | 1.35G + 1.5QiC + 0.75Qs2 + 0.9Qw2 + Imp2 | 1 | 1.35 | LC1 stalna |
| | | | 2 | 1.50 | LC2 koristna etaža |
| | | | 3 | 0.75 | LC4 sneg 2 |
| | | | 4 | 0.90 | LC6 veter - |
| | | | 5 | 1.00 | LC8 izboène sile - |
| CO17 | STR | 1.35G + 1.5QiC + 0.9Qw1 + Imp1 | 1 | 1.35 | LC1 stalna |
| | | | 2 | 1.50 | LC2 koristna etaža |
| | | | 3 | 0.90 | LC5 veter + |
| | | | 4 | 1.00 | LC7 izboène sile + |
| CO18 | STR | 1.35G + 1.5QiC + 0.9Qw1 + Imp2 | 1 | 1.35 | LC1 stalna |
| | | | 2 | 1.50 | LC2 koristna etaža |
| | | | 3 | 0.90 | LC5 veter + |
| | | | 4 | 1.00 | LC8 izboène sile - |
| CO19 | STR | 1.35G + 1.5QiC + 0.9Qw2 + Imp1 | 1 | 1.35 | LC1 stalna |
| | | | 2 | 1.50 | LC2 koristna etaža |
| | | | 3 | 0.90 | LC6 veter - |
| | | | 4 | 1.00 | LC7 izboène sile + |
| CO20 | STR | 1.35G + 1.5QiC + 0.9Qw2 + Imp2 | 1 | 1.35 | LC1 stalna |
| | | | 2 | 1.50 | LC2 koristna etaža |
| | | | 3 | 0.90 | LC6 veter - |
| | | | 4 | 1.00 | LC8 izboène sile - |
| CO21 | STR | 1.35G + 1.5Qs1 + Imp1 | 1 | 1.35 | LC1 stalna |
| | | | 2 | 1.50 | LC3 sneg 1 |
| | | | 3 | 1.00 | LC7 izboène sile + |
| CO22 | STR | 1.35G + 1.5Qs1 + Imp2 | 1 | 1.35 | LC1 stalna |
| | | | 2 | 1.50 | LC3 sneg 1 |
| | | | 3 | 1.00 | LC8 izboène sile - |
| CO23 | STR | 1.35G + 1.5Qs2 + Imp1 | 1 | 1.35 | LC1 stalna |
| | | | 2 | 1.50 | LC4 sneg 2 |
| | | | 3 | 1.00 | LC7 izboène sile + |
| CO24 | STR | 1.35G + 1.5Qs2 + Imp2 | 1 | 1.35 | LC1 stalna |
| | | | 2 | 1.50 | LC4 sneg 2 |
| | | | 3 | 1.00 | LC8 izboène sile - |
| CO25 | STR | 1.35G + 1.05QiC + 1.5Qs1 + Imp1 | 1 | 1.35 | LC1 stalna |
| | | | 2 | 1.05 | LC2 koristna etaža |
| | | | 3 | 1.50 | LC3 sneg 1 |
| | | | 4 | 1.00 | LC7 izboène sile + |
| CO26 | STR | 1.35G + 1.05QiC + 1.5Qs1 + Imp2 | 1 | 1.35 | LC1 stalna |
| | | | 2 | 1.05 | LC2 koristna etaža |
| | | | 3 | 1.50 | LC3 sneg 1 |
| | | | 4 | 1.00 | LC8 izboène sile - |
| CO27 | STR | 1.35G + 1.05QiC + 1.5Qs2 + Imp1 | 1 | 1.35 | LC1 stalna |
| | | | 2 | 1.05 | LC2 koristna etaža |
| | | | 3 | 1.50 | LC4 sneg 2 |
| | | | 4 | 1.00 | LC7 izboène sile + |
| CO28 | STR | 1.35G + 1.05QiC + 1.5Qs2 + Imp2 | 1 | 1.35 | LC1 stalna |
| | | | 2 | 1.05 | LC2 koristna etaža |
| | | | 3 | 1.50 | LC4 sneg 2 |
| | | | 4 | 1.00 | LC8 izboène sile - |
| CO29 | STR | 1.35G + 1.05QiC + 1.5Qs1 + 0.9Qw1 + Imp1 | 1 | 1.35 | LC1 stalna |
| | | | 2 | 1.05 | LC2 koristna etaža |
| | | | 3 | 1.50 | LC3 sneg 1 |
| | | | 4 | 0.90 | LC5 veter + |
| | | | 5 | 1.00 | LC7 izboène sile + |
| CO30 | STR | 1.35G + 1.05QiC + 1.5Qs1 + 0.9Qw1 + Imp2 | 1 | 1.35 | LC1 stalna |
| | | | 2 | 1.05 | LC2 koristna etaža |
| | | | 3 | 1.50 | LC3 sneg 1 |
| | | | 4 | 0.90 | LC5 veter + |
| | | | 5 | 1.00 | LC8 izboène sile - |
| CO31 | STR | 1.35G + 1.05QiC + 1.5Qs1 + 0.9Qw2 + Imp1 | 1 | 1.35 | LC1 stalna |
| | | | 2 | 1.05 | LC2 koristna etaža |
| | | | 3 | 1.50 | LC3 sneg 1 |
| | | | 4 | 0.90 | LC6 veter - |
| | | | 5 | 1.00 | LC7 izboène sile + |
| CO32 | STR | 1.35G + 1.05QiC + 1.5Qs1 + 0.9Qw2 + Imp2 | 1 | 1.35 | LC1 stalna |
| | | | 2 | 1.05 | LC2 koristna etaža |
| | | | 3 | 1.50 | LC3 sneg 1 |
| | | | 4 | 0.90 | LC6 veter - |
| | | | 5 | 1.00 | LC8 izboène sile - |
| CO33 | STR | 1.35G + 1.05QiC + 1.5Qs2 + 0.9Qw1 + Imp1 | 1 | 1.35 | LC1 stalna |
| | | | 2 | 1.05 | LC2 koristna etaža |
| | | | 3 | 1.50 | LC4 sneg 2 |
| | | | 4 | 0.90 | LC5 veter + |
| | | | 5 | 1.00 | LC7 izboène sile + |

## 2.5 LOAD COMBINATIONS

| Load Combin. | DS | Load Combination Description | No. | Factor | Load Case |
|---|---|---|---|---|---|
| CO34 | STR | 1.35G + 1.05QiC + 1.5Qs2 + 0.9Qw1 + Imp2 | 1 | 1.35 | LC1 stalna |
| | | | 2 | 1.05 | LC2 koristna etaža |
| | | | 3 | 1.50 | LC4 sneg 2 |
| | | | 4 | 0.90 | LC5 veter + |
| | | | 5 | 1.00 | LC8 izboène sile - |
| CO35 | STR | 1.35G + 1.05QiC + 1.5Qs2 + 0.9Qw2 + Imp1 | 1 | 1.35 | LC1 stalna |
| | | | 2 | 1.05 | LC2 koristna etaža |
| | | | 3 | 1.50 | LC4 sneg 2 |
| | | | 4 | 0.90 | LC6 veter - |
| | | | 5 | 1.00 | LC7 izboène sile + |
| CO36 | STR | 1.35G + 1.05QiC + 1.5Qs2 + 0.9Qw2 + Imp2 | 1 | 1.35 | LC1 stalna |
| | | | 2 | 1.05 | LC2 koristna etaža |
| | | | 3 | 1.50 | LC4 sneg 2 |
| | | | 4 | 0.90 | LC6 veter - |
| | | | 5 | 1.00 | LC8 izboène sile - |
| CO37 | STR | 1.35G + 1.5Qs1 + 0.9Qw1 + Imp1 | 1 | 1.35 | LC1 stalna |
| | | | 2 | 1.50 | LC3 sneg 1 |
| | | | 3 | 0.90 | LC5 veter + |
| | | | 4 | 1.00 | LC7 izboène sile + |
| CO38 | STR | 1.35G + 1.5Qs1 + 0.9Qw1 + Imp2 | 1 | 1.35 | LC1 stalna |
| | | | 2 | 1.50 | LC3 sneg 1 |
| | | | 3 | 0.90 | LC5 veter + |
| | | | 4 | 1.00 | LC8 izboène sile - |
| CO39 | STR | 1.35G + 1.5Qs1 + 0.9Qw2 + Imp1 | 1 | 1.35 | LC1 stalna |
| | | | 2 | 1.50 | LC3 sneg 1 |
| | | | 3 | 0.90 | LC6 veter - |
| | | | 4 | 1.00 | LC7 izboène sile + |
| CO40 | STR | 1.35G + 1.5Qs1 + 0.9Qw2 + Imp2 | 1 | 1.35 | LC1 stalna |
| | | | 2 | 1.50 | LC3 sneg 1 |
| | | | 3 | 0.90 | LC6 veter - |
| | | | 4 | 1.00 | LC8 izboène sile - |
| CO41 | STR | 1.35G + 1.5Qs2 + 0.9Qw1 + Imp1 | 1 | 1.35 | LC1 stalna |
| | | | 2 | 1.50 | LC4 sneg 2 |
| | | | 3 | 0.90 | LC5 veter + |
| | | | 4 | 1.00 | LC7 izboène sile + |
| CO42 | STR | 1.35G + 1.5Qs2 + 0.9Qw1 + Imp2 | 1 | 1.35 | LC1 stalna |
| | | | 2 | 1.50 | LC4 sneg 2 |
| | | | 3 | 0.90 | LC5 veter + |
| | | | 4 | 1.00 | LC8 izboène sile - |
| CO43 | STR | 1.35G + 1.5Qs2 + 0.9Qw2 + Imp1 | 1 | 1.35 | LC1 stalna |
| | | | 2 | 1.50 | LC4 sneg 2 |
| | | | 3 | 0.90 | LC6 veter - |
| | | | 4 | 1.00 | LC7 izboène sile + |
| CO44 | STR | 1.35G + 1.5Qs2 + 0.9Qw2 + Imp2 | 1 | 1.35 | LC1 stalna |
| | | | 2 | 1.50 | LC4 sneg 2 |
| | | | 3 | 0.90 | LC6 veter - |
| | | | 4 | 1.00 | LC8 izboène sile - |
| CO45 | STR | 1.35G + 1.5Qw1 + Imp1 | 1 | 1.35 | LC1 stalna |
| | | | 2 | 1.50 | LC5 veter + |
| | | | 3 | 1.00 | LC7 izboène sile + |
| CO46 | STR | 1.35G + 1.5Qw1 + Imp2 | 1 | 1.35 | LC1 stalna |
| | | | 2 | 1.50 | LC5 veter + |
| | | | 3 | 1.00 | LC8 izboène sile - |
| CO47 | STR | 1.35G + 1.5Qw2 + Imp1 | 1 | 1.35 | LC1 stalna |
| | | | 2 | 1.50 | LC6 veter - |
| | | | 3 | 1.00 | LC7 izboène sile + |
| CO48 | STR | 1.35G + 1.5Qw2 + Imp2 | 1 | 1.35 | LC1 stalna |
| | | | 2 | 1.50 | LC6 veter - |
| | | | 3 | 1.00 | LC8 izboène sile - |
| CO49 | STR | 1.35G + 1.05QiC + 1.5Qw1 + Imp1 | 1 | 1.35 | LC1 stalna |
| | | | 2 | 1.05 | LC2 koristna etaža |
| | | | 3 | 1.50 | LC5 veter + |
| | | | 4 | 1.00 | LC7 izboène sile + |
| CO50 | STR | 1.35G + 1.05QiC + 1.5Qw1 + Imp2 | 1 | 1.35 | LC1 stalna |
| | | | 2 | 1.05 | LC2 koristna etaža |
| | | | 3 | 1.50 | LC5 veter + |
| | | | 4 | 1.00 | LC8 izboène sile - |
| CO51 | STR | 1.35G + 1.05QiC + 1.5Qw2 + Imp1 | 1 | 1.35 | LC1 stalna |
| | | | 2 | 1.05 | LC2 koristna etaža |
| | | | 3 | 1.50 | LC6 veter - |
| | | | 4 | 1.00 | LC7 izboène sile + |
| CO52 | STR | 1.35G + 1.05QiC + 1.5Qw2 + Imp2 | 1 | 1.35 | LC1 stalna |
| | | | 2 | 1.05 | LC2 koristna etaža |
| | | | 3 | 1.50 | LC6 veter - |
| | | | 4 | 1.00 | LC8 izboène sile - |
| CO53 | STR | 1.35G + 1.05QiC + 0.75Qs1 + 1.5Qw1 + Imp1 | 1 | 1.35 | LC1 stalna |
| | | | 2 | 1.05 | LC2 koristna etaža |
| | | | 3 | 0.75 | LC3 sneg 1 |
| | | | 4 | 1.50 | LC5 veter + |
| | | | 5 | 1.00 | LC7 izboène sile + |
| CO54 | STR | 1.35G + 1.05QiC + 0.75Qs1 + 1.5Qw1 + Imp2 | 1 | 1.35 | LC1 stalna |
| | | | 2 | 1.05 | LC2 koristna etaža |
| | | | 3 | 0.75 | LC3 sneg 1 |
| | | | 4 | 1.50 | LC5 veter + |
| | | | 5 | 1.00 | LC8 izboène sile - |
| CO55 | STR | 1.35G + 1.05QiC + 0.75Qs1 + 1.5Qw2 + Imp1 | 1 | 1.35 | LC1 stalna |
| | | | 2 | 1.05 | LC2 koristna etaža |
| | | | 3 | 0.75 | LC3 sneg 1 |
| | | | 4 | 1.50 | LC6 veter - |
| | | | 5 | 1.00 | LC7 izboène sile + |
| CO56 | STR | 1.35G + 1.05QiC + 0.75Qs1 + 1.5Qw2 + Imp2 | 1 | 1.35 | LC1 stalna |
| | | | 2 | 1.05 | LC2 koristna etaža |
| | | | 3 | 0.75 | LC3 sneg 1 |
| | | | 4 | 1.50 | LC6 veter - |

## 2.5 LOAD COMBINATIONS

| Load Combin. | DS | Load Combination Description | No. | Factor | Load Case |
|---|---|---|---|---|---|
| | | | 5 | 1.00 | LC8 izboène sile - |
| CO57 | STR | 1.35G + 1.05QiC + 0.75Qs2 + 1.5Qw1 + Imp1 | 1 | 1.35 | LC1 stalna |
| | | | 2 | 1.05 | LC2 koristna etaža |
| | | | 3 | 0.75 | LC4 sneg 2 |
| | | | 4 | 1.50 | LC5 veter + |
| | | | 5 | 1.00 | LC7 izboène sile + |
| CO58 | STR | 1.35G + 1.05QiC + 0.75Qs2 + 1.5Qw1 + Imp2 | 1 | 1.35 | LC1 stalna |
| | | | 2 | 1.05 | LC2 koristna etaža |
| | | | 3 | 0.75 | LC4 sneg 2 |
| | | | 4 | 1.50 | LC5 veter + |
| | | | 5 | 1.00 | LC8 izboène sile - |
| CO59 | STR | 1.35G + 1.05QiC + 0.75Qs2 + 1.5Qw2 + Imp1 | 1 | 1.35 | LC1 stalna |
| | | | 2 | 1.05 | LC2 koristna etaža |
| | | | 3 | 0.75 | LC4 sneg 2 |
| | | | 4 | 1.50 | LC6 veter - |
| | | | 5 | 1.00 | LC7 izboène sile + |
| CO60 | STR | 1.35G + 1.05QiC + 0.75Qs2 + 1.5Qw2 + Imp2 | 1 | 1.35 | LC1 stalna |
| | | | 2 | 1.05 | LC2 koristna etaža |
| | | | 3 | 0.75 | LC4 sneg 2 |
| | | | 4 | 1.50 | LC6 veter - |
| | | | 5 | 1.00 | LC8 izboène sile - |
| CO61 | STR | 1.35G + 0.75Qs1 + 1.5Qw1 + Imp1 | 1 | 1.35 | LC1 stalna |
| | | | 2 | 0.75 | LC3 sneg 1 |
| | | | 3 | 1.50 | LC5 veter + |
| | | | 4 | 1.00 | LC7 izboène sile + |
| CO62 | STR | 1.35G + 0.75Qs1 + 1.5Qw1 + Imp2 | 1 | 1.35 | LC1 stalna |
| | | | 2 | 0.75 | LC3 sneg 1 |
| | | | 3 | 1.50 | LC5 veter + |
| | | | 4 | 1.00 | LC8 izboène sile - |
| CO63 | STR | 1.35G + 0.75Qs1 + 1.5Qw2 + Imp1 | 1 | 1.35 | LC1 stalna |
| | | | 2 | 0.75 | LC3 sneg 1 |
| | | | 3 | 1.50 | LC6 veter - |
| | | | 4 | 1.00 | LC7 izboène sile + |
| CO64 | STR | 1.35G + 0.75Qs1 + 1.5Qw2 + Imp2 | 1 | 1.35 | LC1 stalna |
| | | | 2 | 0.75 | LC3 sneg 1 |
| | | | 3 | 1.50 | LC6 veter - |
| | | | 4 | 1.00 | LC8 izboène sile - |
| CO65 | STR | 1.35G + 0.75Qs2 + 1.5Qw1 + Imp1 | 1 | 1.35 | LC1 stalna |
| | | | 2 | 0.75 | LC4 sneg 2 |
| | | | 3 | 1.50 | LC5 veter + |
| | | | 4 | 1.00 | LC7 izboène sile + |
| CO66 | STR | 1.35G + 0.75Qs2 + 1.5Qw1 + Imp2 | 1 | 1.35 | LC1 stalna |
| | | | 2 | 0.75 | LC4 sneg 2 |
| | | | 3 | 1.50 | LC5 veter + |
| | | | 4 | 1.00 | LC8 izboène sile - |
| CO67 | STR | 1.35G + 0.75Qs2 + 1.5Qw2 + Imp1 | 1 | 1.35 | LC1 stalna |
| | | | 2 | 0.75 | LC4 sneg 2 |
| | | | 3 | 1.50 | LC6 veter - |
| | | | 4 | 1.00 | LC7 izboène sile + |
| CO68 | STR | 1.35G + 0.75Qs2 + 1.5Qw2 + Imp2 | 1 | 1.35 | LC1 stalna |
| | | | 2 | 0.75 | LC4 sneg 2 |
| | | | 3 | 1.50 | LC6 veter - |
| | | | 4 | 1.00 | LC8 izboène sile - |
| CO69 | STR | G + Imp1 | 1 | 1.00 | LC1 stalna |
| | | | 2 | 1.00 | LC7 izboène sile + |
| CO70 | STR | G + Imp2 | 1 | 1.00 | LC1 stalna |
| | | | 2 | 1.00 | LC8 izboène sile - |
| CO71 | STR | G + 1.5QiC + Imp1 | 1 | 1.00 | LC1 stalna |
| | | | 2 | 1.50 | LC2 koristna etaža |
| | | | 3 | 1.00 | LC7 izboène sile + |
| CO72 | STR | G + 1.5QiC + Imp2 | 1 | 1.00 | LC1 stalna |
| | | | 2 | 1.50 | LC2 koristna etaža |
| | | | 3 | 1.00 | LC8 izboène sile - |
| CO73 | STR | G + 1.5QiC + 0.75Qs1 + Imp1 | 1 | 1.00 | LC1 stalna |
| | | | 2 | 1.50 | LC2 koristna etaža |
| | | | 3 | 0.75 | LC3 sneg 1 |
| | | | 4 | 1.00 | LC7 izboène sile + |
| CO74 | STR | G + 1.5QiC + 0.75Qs1 + Imp2 | 1 | 1.00 | LC1 stalna |
| | | | 2 | 1.50 | LC2 koristna etaža |
| | | | 3 | 0.75 | LC3 sneg 1 |
| | | | 4 | 1.00 | LC8 izboène sile - |
| CO75 | STR | G + 1.5QiC + 0.75Qs2 + Imp1 | 1 | 1.00 | LC1 stalna |
| | | | 2 | 1.50 | LC2 koristna etaža |
| | | | 3 | 0.75 | LC4 sneg 2 |
| | | | 4 | 1.00 | LC7 izboène sile + |
| CO76 | STR | G + 1.5QiC + 0.75Qs2 + Imp2 | 1 | 1.00 | LC1 stalna |
| | | | 2 | 1.50 | LC2 koristna etaža |
| | | | 3 | 0.75 | LC4 sneg 2 |
| | | | 4 | 1.00 | LC8 izboène sile - |
| CO77 | STR | G + 1.5QiC + 0.75Qs1 + 0.9Qw1 + Imp1 | 1 | 1.00 | LC1 stalna |
| | | | 2 | 1.50 | LC2 koristna etaža |
| | | | 3 | 0.75 | LC3 sneg 1 |
| | | | 4 | 0.90 | LC5 veter + |
| | | | 5 | 1.00 | LC7 izboène sile + |
| CO78 | STR | G + 1.5QiC + 0.75Qs1 + 0.9Qw1 + Imp2 | 1 | 1.00 | LC1 stalna |
| | | | 2 | 1.50 | LC2 koristna etaža |
| | | | 3 | 0.75 | LC3 sneg 1 |
| | | | 4 | 0.90 | LC5 veter + |
| | | | 5 | 1.00 | LC8 izboène sile - |
| CO79 | STR | G + 1.5QiC + 0.75Qs1 + 0.9Qw2 + Imp1 | 1 | 1.00 | LC1 stalna |
| | | | 2 | 1.50 | LC2 koristna etaža |
| | | | 3 | 0.75 | LC3 sneg 1 |
| | | | 4 | 0.90 | LC6 veter - |
| | | | 5 | 1.00 | LC7 izboène sile + |

## 2.5 LOAD COMBINATIONS

| Load Combin. | DS | Load Combination Description | No. | Factor | Load Case |
|---|---|---|---|---|---|
| CO80 | STR | G + 1.5QiC + 0.75Qs1 + 0.9Qw2 + Imp2 | 1 | 1.00 | LC1 stalna |
| | | | 2 | 1.50 | LC2 koristna etaža |
| | | | 3 | 0.75 | LC3 sneg 1 |
| | | | 4 | 0.90 | LC6 veter - |
| | | | 5 | 1.00 | LC8 izboène sile - |
| CO81 | STR | G + 1.5QiC + 0.75Qs2 + 0.9Qw1 + Imp1 | 1 | 1.00 | LC1 stalna |
| | | | 2 | 1.50 | LC2 koristna etaža |
| | | | 3 | 0.75 | LC4 sneg 2 |
| | | | 4 | 0.90 | LC5 veter + |
| | | | 5 | 1.00 | LC7 izboène sile + |
| CO82 | STR | G + 1.5QiC + 0.75Qs2 + 0.9Qw1 + Imp2 | 1 | 1.00 | LC1 stalna |
| | | | 2 | 1.50 | LC2 koristna etaža |
| | | | 3 | 0.75 | LC4 sneg 2 |
| | | | 4 | 0.90 | LC5 veter + |
| | | | 5 | 1.00 | LC8 izboène sile - |
| CO83 | STR | G + 1.5QiC + 0.75Qs2 + 0.9Qw2 + Imp1 | 1 | 1.00 | LC1 stalna |
| | | | 2 | 1.50 | LC2 koristna etaža |
| | | | 3 | 0.75 | LC4 sneg 2 |
| | | | 4 | 0.90 | LC6 veter - |
| | | | 5 | 1.00 | LC7 izboène sile + |
| CO84 | STR | G + 1.5QiC + 0.75Qs2 + 0.9Qw2 + Imp2 | 1 | 1.00 | LC1 stalna |
| | | | 2 | 1.50 | LC2 koristna etaža |
| | | | 3 | 0.75 | LC4 sneg 2 |
| | | | 4 | 0.90 | LC6 veter - |
| | | | 5 | 1.00 | LC8 izboène sile - |
| CO85 | STR | G + 1.5QiC + 0.9Qw1 + Imp1 | 1 | 1.00 | LC1 stalna |
| | | | 2 | 1.50 | LC2 koristna etaža |
| | | | 3 | 0.90 | LC5 veter + |
| | | | 4 | 1.00 | LC7 izboène sile + |
| CO86 | STR | G + 1.5QiC + 0.9Qw1 + Imp2 | 1 | 1.00 | LC1 stalna |
| | | | 2 | 1.50 | LC2 koristna etaža |
| | | | 3 | 0.90 | LC5 veter + |
| | | | 4 | 1.00 | LC8 izboène sile - |
| CO87 | STR | G + 1.5QiC + 0.9Qw2 + Imp1 | 1 | 1.00 | LC1 stalna |
| | | | 2 | 1.50 | LC2 koristna etaža |
| | | | 3 | 0.90 | LC6 veter - |
| | | | 4 | 1.00 | LC7 izboène sile + |
| CO88 | STR | G + 1.5QiC + 0.9Qw2 + Imp2 | 1 | 1.00 | LC1 stalna |
| | | | 2 | 1.50 | LC2 koristna etaža |
| | | | 3 | 0.90 | LC6 veter - |
| | | | 4 | 1.00 | LC8 izboène sile - |
| CO89 | STR | G + 1.5Qs1 + Imp1 | 1 | 1.00 | LC1 stalna |
| | | | 2 | 1.50 | LC3 sneg 1 |
| | | | 3 | 1.00 | LC7 izboène sile + |
| CO90 | STR | G + 1.5Qs1 + Imp2 | 1 | 1.00 | LC1 stalna |
| | | | 2 | 1.50 | LC3 sneg 1 |
| | | | 3 | 1.00 | LC8 izboène sile - |
| CO91 | STR | G + 1.5Qs2 + Imp1 | 1 | 1.00 | LC1 stalna |
| | | | 2 | 1.50 | LC4 sneg 2 |
| | | | 3 | 1.00 | LC7 izboène sile + |
| CO92 | STR | G + 1.5Qs2 + Imp2 | 1 | 1.00 | LC1 stalna |
| | | | 2 | 1.50 | LC4 sneg 2 |
| | | | 3 | 1.00 | LC8 izboène sile - |
| CO93 | STR | G + 1.05QiC + 1.5Qs1 + Imp1 | 1 | 1.00 | LC1 stalna |
| | | | 2 | 1.05 | LC2 koristna etaža |
| | | | 3 | 1.50 | LC3 sneg 1 |
| | | | 4 | 1.00 | LC7 izboène sile + |
| CO94 | STR | G + 1.05QiC + 1.5Qs1 + Imp2 | 1 | 1.00 | LC1 stalna |
| | | | 2 | 1.05 | LC2 koristna etaža |
| | | | 3 | 1.50 | LC3 sneg 1 |
| | | | 4 | 1.00 | LC8 izboène sile - |
| CO95 | STR | G + 1.05QiC + 1.5Qs2 + Imp1 | 1 | 1.00 | LC1 stalna |
| | | | 2 | 1.05 | LC2 koristna etaža |
| | | | 3 | 1.50 | LC4 sneg 2 |
| | | | 4 | 1.00 | LC7 izboène sile + |
| CO96 | STR | G + 1.05QiC + 1.5Qs2 + Imp2 | 1 | 1.00 | LC1 stalna |
| | | | 2 | 1.05 | LC2 koristna etaža |
| | | | 3 | 1.50 | LC4 sneg 2 |
| | | | 4 | 1.00 | LC8 izboène sile - |
| CO97 | STR | G + 1.05QiC + 1.5Qs1 + 0.9Qw1 + Imp1 | 1 | 1.00 | LC1 stalna |
| | | | 2 | 1.05 | LC2 koristna etaža |
| | | | 3 | 1.50 | LC3 sneg 1 |
| | | | 4 | 0.90 | LC5 veter + |
| | | | 5 | 1.00 | LC7 izboène sile + |
| CO98 | STR | G + 1.05QiC + 1.5Qs1 + 0.9Qw1 + Imp2 | 1 | 1.00 | LC1 stalna |
| | | | 2 | 1.05 | LC2 koristna etaža |
| | | | 3 | 1.50 | LC3 sneg 1 |
| | | | 4 | 0.90 | LC5 veter + |
| | | | 5 | 1.00 | LC8 izboène sile - |
| CO99 | STR | G + 1.05QiC + 1.5Qs1 + 0.9Qw2 + Imp1 | 1 | 1.00 | LC1 stalna |
| | | | 2 | 1.05 | LC2 koristna etaža |
| | | | 3 | 1.50 | LC3 sneg 1 |
| | | | 4 | 0.90 | LC6 veter - |
| | | | 5 | 1.00 | LC7 izboène sile + |
| CO100 | STR | G + 1.05QiC + 1.5Qs1 + 0.9Qw2 + Imp2 | 1 | 1.00 | LC1 stalna |
| | | | 2 | 1.05 | LC2 koristna etaža |
| | | | 3 | 1.50 | LC3 sneg 1 |
| | | | 4 | 0.90 | LC6 veter - |
| | | | 5 | 1.00 | LC8 izboène sile - |
| CO101 | STR | G + 1.05QiC + 1.5Qs2 + 0.9Qw1 + Imp1 | 1 | 1.00 | LC1 stalna |
| | | | 2 | 1.05 | LC2 koristna etaža |
| | | | 3 | 1.50 | LC4 sneg 2 |
| | | | 4 | 0.90 | LC5 veter + |
| | | | 5 | 1.00 | LC7 izboène sile + |

## 2.5 LOAD COMBINATIONS

| Load Combin. | DS | Load Combination Description | No. | Factor | Load Case |
|---|---|---|---|---|---|
| CO102 | STR | G + 1.05QiC + 1.5Qs2 + 0.9Qw1 + Imp2 | 1 | 1.00 | LC1 stalna |
| | | | 2 | 1.05 | LC2 koristna etaža |
| | | | 3 | 1.50 | LC4 sneg 2 |
| | | | 4 | 0.90 | LC5 veter + |
| | | | 5 | 1.00 | LC8 izboène sile - |
| CO103 | STR | G + 1.05QiC + 1.5Qs2 + 0.9Qw2 + Imp1 | 1 | 1.00 | LC1 stalna |
| | | | 2 | 1.05 | LC2 koristna etaža |
| | | | 3 | 1.50 | LC4 sneg 2 |
| | | | 4 | 0.90 | LC6 veter - |
| | | | 5 | 1.00 | LC7 izboène sile + |
| CO104 | STR | G + 1.05QiC + 1.5Qs2 + 0.9Qw2 + Imp2 | 1 | 1.00 | LC1 stalna |
| | | | 2 | 1.05 | LC2 koristna etaža |
| | | | 3 | 1.50 | LC4 sneg 2 |
| | | | 4 | 0.90 | LC6 veter - |
| | | | 5 | 1.00 | LC8 izboène sile - |
| CO105 | STR | G + 1.5Qs1 + 0.9Qw1 + Imp1 | 1 | 1.00 | LC1 stalna |
| | | | 2 | 1.50 | LC3 sneg 1 |
| | | | 3 | 0.90 | LC5 veter + |
| | | | 4 | 1.00 | LC7 izboène sile + |
| CO106 | STR | G + 1.5Qs1 + 0.9Qw1 + Imp2 | 1 | 1.00 | LC1 stalna |
| | | | 2 | 1.50 | LC3 sneg 1 |
| | | | 3 | 0.90 | LC5 veter + |
| | | | 4 | 1.00 | LC8 izboène sile - |
| CO107 | STR | G + 1.5Qs1 + 0.9Qw2 + Imp1 | 1 | 1.00 | LC1 stalna |
| | | | 2 | 1.50 | LC3 sneg 1 |
| | | | 3 | 0.90 | LC6 veter - |
| | | | 4 | 1.00 | LC7 izboène sile + |
| CO108 | STR | G + 1.5Qs1 + 0.9Qw2 + Imp2 | 1 | 1.00 | LC1 stalna |
| | | | 2 | 1.50 | LC3 sneg 1 |
| | | | 3 | 0.90 | LC6 veter - |
| | | | 4 | 1.00 | LC8 izboène sile - |
| CO109 | STR | G + 1.5Qs2 + 0.9Qw1 + Imp1 | 1 | 1.00 | LC1 stalna |
| | | | 2 | 1.50 | LC4 sneg 2 |
| | | | 3 | 0.90 | LC5 veter + |
| | | | 4 | 1.00 | LC7 izboène sile + |
| CO110 | STR | G + 1.5Qs2 + 0.9Qw1 + Imp2 | 1 | 1.00 | LC1 stalna |
| | | | 2 | 1.50 | LC4 sneg 2 |
| | | | 3 | 0.90 | LC5 veter + |
| | | | 4 | 1.00 | LC8 izboène sile - |
| CO111 | STR | G + 1.5Qs2 + 0.9Qw2 + Imp1 | 1 | 1.00 | LC1 stalna |
| | | | 2 | 1.50 | LC4 sneg 2 |
| | | | 3 | 0.90 | LC6 veter - |
| | | | 4 | 1.00 | LC7 izboène sile + |
| CO112 | STR | G + 1.5Qs2 + 0.9Qw2 + Imp2 | 1 | 1.00 | LC1 stalna |
| | | | 2 | 1.50 | LC4 sneg 2 |
| | | | 3 | 0.90 | LC6 veter - |
| | | | 4 | 1.00 | LC8 izboène sile - |
| CO113 | STR | G + 1.5Qw1 + Imp1 | 1 | 1.00 | LC1 stalna |
| | | | 2 | 1.50 | LC5 veter + |
| | | | 3 | 1.00 | LC7 izboène sile + |
| CO114 | STR | G + 1.5Qw1 + Imp2 | 1 | 1.00 | LC1 stalna |
| | | | 2 | 1.50 | LC5 veter + |
| | | | 3 | 1.00 | LC8 izboène sile - |
| CO115 | STR | G + 1.5Qw2 + Imp1 | 1 | 1.00 | LC1 stalna |
| | | | 2 | 1.50 | LC6 veter - |
| | | | 3 | 1.00 | LC7 izboène sile + |
| CO116 | STR | G + 1.5Qw2 + Imp2 | 1 | 1.00 | LC1 stalna |
| | | | 2 | 1.50 | LC6 veter - |
| | | | 3 | 1.00 | LC8 izboène sile - |
| CO117 | STR | G + 1.05QiC + 1.5Qw1 + Imp1 | 1 | 1.00 | LC1 stalna |
| | | | 2 | 1.05 | LC2 koristna etaža |
| | | | 3 | 1.50 | LC5 veter + |
| | | | 4 | 1.00 | LC7 izboène sile + |
| CO118 | STR | G + 1.05QiC + 1.5Qw1 + Imp2 | 1 | 1.00 | LC1 stalna |
| | | | 2 | 1.05 | LC2 koristna etaža |
| | | | 3 | 1.50 | LC5 veter + |
| | | | 4 | 1.00 | LC8 izboène sile - |
| CO119 | STR | G + 1.05QiC + 1.5Qw2 + Imp1 | 1 | 1.00 | LC1 stalna |
| | | | 2 | 1.05 | LC2 koristna etaža |
| | | | 3 | 1.50 | LC6 veter - |
| | | | 4 | 1.00 | LC7 izboène sile + |
| CO120 | STR | G + 1.05QiC + 1.5Qw2 + Imp2 | 1 | 1.00 | LC1 stalna |
| | | | 2 | 1.05 | LC2 koristna etaža |
| | | | 3 | 1.50 | LC6 veter - |
| | | | 4 | 1.00 | LC8 izboène sile - |
| CO121 | STR | G + 1.05QiC + 0.75Qs1 + 1.5Qw1 + Imp1 | 1 | 1.00 | LC1 stalna |
| | | | 2 | 1.05 | LC2 koristna etaža |
| | | | 3 | 0.75 | LC3 sneg 1 |
| | | | 4 | 1.50 | LC5 veter + |
| | | | 5 | 1.00 | LC7 izboène sile + |
| CO122 | STR | G + 1.05QiC + 0.75Qs1 + 1.5Qw1 + Imp2 | 1 | 1.00 | LC1 stalna |
| | | | 2 | 1.05 | LC2 koristna etaža |
| | | | 3 | 0.75 | LC3 sneg 1 |
| | | | 4 | 1.50 | LC5 veter + |
| | | | 5 | 1.00 | LC8 izboène sile - |
| CO123 | STR | G + 1.05QiC + 0.75Qs1 + 1.5Qw2 + Imp1 | 1 | 1.00 | LC1 stalna |
| | | | 2 | 1.05 | LC2 koristna etaža |
| | | | 3 | 0.75 | LC3 sneg 1 |
| | | | 4 | 1.50 | LC6 veter - |
| | | | 5 | 1.00 | LC7 izboène sile + |
| CO124 | STR | G + 1.05QiC + 0.75Qs1 + 1.5Qw2 + Imp2 | 1 | 1.00 | LC1 stalna |
| | | | 2 | 1.05 | LC2 koristna etaža |
| | | | 3 | 0.75 | LC3 sneg 1 |
| | | | 4 | 1.50 | LC6 veter - |

## 2.5 LOAD COMBINATIONS

| Load Combin. | DS | Load Combination Description | No. | Factor | Load Case | |
|---|---|---|---|---|---|---|
| | | | 5 | 1.00 | LC8 | izboène sile - |
| CO125 | STR | G + 1.05QiC + 0.75Qs2 + 1.5Qw1 + Imp1 | 1 | 1.00 | LC1 | stalna |
| | | | 2 | 1.05 | LC2 | koristna etaža |
| | | | 3 | 0.75 | LC4 | sneg 2 |
| | | | 4 | 1.50 | LC5 | veter + |
| | | | 5 | 1.00 | LC7 | izboène sile + |
| CO126 | STR | G + 1.05QiC + 0.75Qs2 + 1.5Qw1 + Imp2 | 1 | 1.00 | LC1 | stalna |
| | | | 2 | 1.05 | LC2 | koristna etaža |
| | | | 3 | 0.75 | LC4 | sneg 2 |
| | | | 4 | 1.50 | LC5 | veter + |
| | | | 5 | 1.00 | LC8 | izboène sile - |
| CO127 | STR | G + 1.05QiC + 0.75Qs2 + 1.5Qw2 + Imp1 | 1 | 1.00 | LC1 | stalna |
| | | | 2 | 1.05 | LC2 | koristna etaža |
| | | | 3 | 0.75 | LC4 | sneg 2 |
| | | | 4 | 1.50 | LC6 | veter - |
| | | | 5 | 1.00 | LC7 | izboène sile + |
| CO128 | STR | G + 1.05QiC + 0.75Qs2 + 1.5Qw2 + Imp2 | 1 | 1.00 | LC1 | stalna |
| | | | 2 | 1.05 | LC2 | koristna etaža |
| | | | 3 | 0.75 | LC4 | sneg 2 |
| | | | 4 | 1.50 | LC6 | veter - |
| | | | 5 | 1.00 | LC8 | izboène sile - |
| CO129 | STR | G + 0.75Qs1 + 1.5Qw1 + Imp1 | 1 | 1.00 | LC1 | stalna |
| | | | 2 | 0.75 | LC3 | sneg 1 |
| | | | 3 | 1.50 | LC5 | veter + |
| | | | 4 | 1.00 | LC7 | izboène sile + |
| CO130 | STR | G + 0.75Qs1 + 1.5Qw1 + Imp2 | 1 | 1.00 | LC1 | stalna |
| | | | 2 | 0.75 | LC3 | sneg 1 |
| | | | 3 | 1.50 | LC5 | veter + |
| | | | 4 | 1.00 | LC8 | izboène sile - |
| CO131 | STR | G + 0.75Qs1 + 1.5Qw2 + Imp1 | 1 | 1.00 | LC1 | stalna |
| | | | 2 | 0.75 | LC3 | sneg 1 |
| | | | 3 | 1.50 | LC6 | veter - |
| | | | 4 | 1.00 | LC7 | izboène sile + |
| CO132 | STR | G + 0.75Qs1 + 1.5Qw2 + Imp2 | 1 | 1.00 | LC1 | stalna |
| | | | 2 | 0.75 | LC3 | sneg 1 |
| | | | 3 | 1.50 | LC6 | veter - |
| | | | 4 | 1.00 | LC8 | izboène sile - |
| CO133 | STR | G + 0.75Qs2 + 1.5Qw1 + Imp1 | 1 | 1.00 | LC1 | stalna |
| | | | 2 | 0.75 | LC4 | sneg 2 |
| | | | 3 | 1.50 | LC5 | veter + |
| | | | 4 | 1.00 | LC7 | izboène sile + |
| CO134 | STR | G + 0.75Qs2 + 1.5Qw1 + Imp2 | 1 | 1.00 | LC1 | stalna |
| | | | 2 | 0.75 | LC4 | sneg 2 |
| | | | 3 | 1.50 | LC5 | veter + |
| | | | 4 | 1.00 | LC8 | izboène sile - |
| CO135 | STR | G + 0.75Qs2 + 1.5Qw2 + Imp1 | 1 | 1.00 | LC1 | stalna |
| | | | 2 | 0.75 | LC4 | sneg 2 |
| | | | 3 | 1.50 | LC6 | veter - |
| | | | 4 | 1.00 | LC7 | izboène sile + |
| CO136 | STR | G + 0.75Qs2 + 1.5Qw2 + Imp2 | 1 | 1.00 | LC1 | stalna |
| | | | 2 | 0.75 | LC4 | sneg 2 |
| | | | 3 | 1.50 | LC6 | veter - |
| | | | 4 | 1.00 | LC8 | izboène sile - |
| CO137 | S Ch | G + Imp1 | 1 | 1.00 | LC1 | stalna |
| | | | 2 | 1.00 | LC7 | izboène sile + |
| CO138 | S Ch | G + Imp2 | 1 | 1.00 | LC1 | stalna |
| | | | 2 | 1.00 | LC8 | izboène sile - |
| CO139 | S Ch | G + QiC + Imp1 | 1 | 1.00 | LC1 | stalna |
| | | | 2 | 1.00 | LC2 | koristna etaža |
| | | | 3 | 1.00 | LC7 | izboène sile + |
| CO140 | S Ch | G + QiC + Imp2 | 1 | 1.00 | LC1 | stalna |
| | | | 2 | 1.00 | LC2 | koristna etaža |
| | | | 3 | 1.00 | LC8 | izboène sile - |
| CO141 | S Ch | G + QiC + 0.5Qs1 + Imp1 | 1 | 1.00 | LC1 | stalna |
| | | | 2 | 1.00 | LC2 | koristna etaža |
| | | | 3 | 0.50 | LC3 | sneg 1 |
| | | | 4 | 1.00 | LC7 | izboène sile + |
| CO142 | S Ch | G + QiC + 0.5Qs1 + Imp2 | 1 | 1.00 | LC1 | stalna |
| | | | 2 | 1.00 | LC2 | koristna etaža |
| | | | 3 | 0.50 | LC3 | sneg 1 |
| | | | 4 | 1.00 | LC8 | izboène sile - |
| CO143 | S Ch | G + QiC + 0.5Qs2 + Imp1 | 1 | 1.00 | LC1 | stalna |
| | | | 2 | 1.00 | LC2 | koristna etaža |
| | | | 3 | 0.50 | LC4 | sneg 2 |
| | | | 4 | 1.00 | LC7 | izboène sile + |
| CO144 | S Ch | G + QiC + 0.5Qs2 + Imp2 | 1 | 1.00 | LC1 | stalna |
| | | | 2 | 1.00 | LC2 | koristna etaža |
| | | | 3 | 0.50 | LC4 | sneg 2 |
| | | | 4 | 1.00 | LC8 | izboène sile - |
| CO145 | S Ch | G + QiC + 0.5Qs1 + 0.6Qw1 + Imp1 | 1 | 1.00 | LC1 | stalna |
| | | | 2 | 1.00 | LC2 | koristna etaža |
| | | | 3 | 0.50 | LC3 | sneg 1 |
| | | | 4 | 0.60 | LC5 | veter + |
| | | | 5 | 1.00 | LC7 | izboène sile + |
| CO146 | S Ch | G + QiC + 0.5Qs1 + 0.6Qw1 + Imp2 | 1 | 1.00 | LC1 | stalna |
| | | | 2 | 1.00 | LC2 | koristna etaža |
| | | | 3 | 0.50 | LC3 | sneg 1 |
| | | | 4 | 0.60 | LC5 | veter + |
| | | | 5 | 1.00 | LC8 | izboène sile - |
| CO147 | S Ch | G + QiC + 0.5Qs1 + 0.6Qw2 + Imp1 | 1 | 1.00 | LC1 | stalna |
| | | | 2 | 1.00 | LC2 | koristna etaža |
| | | | 3 | 0.50 | LC3 | sneg 1 |
| | | | 4 | 0.60 | LC6 | veter - |
| | | | 5 | 1.00 | LC7 | izboène sile + |

## 2.5 LOAD COMBINATIONS

| Load Combin. | DS | Load Combination Description | No. | Factor | Load Case |
|---|---|---|---|---|---|
| CO148 | S Ch | G + QiC + 0.5Qs1 + 0.6Qw2 + Imp2 | 1 | 1.00 | LC1 stalna |
| | | | 2 | 1.00 | LC2 koristna etaža |
| | | | 3 | 0.50 | LC3 sneg 1 |
| | | | 4 | 0.60 | LC6 veter - |
| | | | 5 | 1.00 | LC8 izboène sile - |
| CO149 | S Ch | G + QiC + 0.5Qs2 + 0.6Qw1 + Imp1 | 1 | 1.00 | LC1 stalna |
| | | | 2 | 1.00 | LC2 koristna etaža |
| | | | 3 | 0.50 | LC4 sneg 2 |
| | | | 4 | 0.60 | LC5 veter + |
| | | | 5 | 1.00 | LC7 izboène sile + |
| CO150 | S Ch | G + QiC + 0.5Qs2 + 0.6Qw1 + Imp2 | 1 | 1.00 | LC1 stalna |
| | | | 2 | 1.00 | LC2 koristna etaža |
| | | | 3 | 0.50 | LC4 sneg 2 |
| | | | 4 | 0.60 | LC5 veter + |
| | | | 5 | 1.00 | LC8 izboène sile - |
| CO151 | S Ch | G + QiC + 0.5Qs2 + 0.6Qw2 + Imp1 | 1 | 1.00 | LC1 stalna |
| | | | 2 | 1.00 | LC2 koristna etaža |
| | | | 3 | 0.50 | LC4 sneg 2 |
| | | | 4 | 0.60 | LC6 veter - |
| | | | 5 | 1.00 | LC7 izboène sile + |
| CO152 | S Ch | G + QiC + 0.5Qs2 + 0.6Qw2 + Imp2 | 1 | 1.00 | LC1 stalna |
| | | | 2 | 1.00 | LC2 koristna etaža |
| | | | 3 | 0.50 | LC4 sneg 2 |
| | | | 4 | 0.60 | LC6 veter - |
| | | | 5 | 1.00 | LC8 izboène sile - |
| CO153 | S Ch | G + QiC + 0.6Qw1 + Imp1 | 1 | 1.00 | LC1 stalna |
| | | | 2 | 1.00 | LC2 koristna etaža |
| | | | 3 | 0.60 | LC5 veter + |
| | | | 4 | 1.00 | LC7 izboène sile + |
| CO154 | S Ch | G + QiC + 0.6Qw1 + Imp2 | 1 | 1.00 | LC1 stalna |
| | | | 2 | 1.00 | LC2 koristna etaža |
| | | | 3 | 0.60 | LC5 veter + |
| | | | 4 | 1.00 | LC8 izboène sile - |
| CO155 | S Ch | G + QiC + 0.6Qw2 + Imp1 | 1 | 1.00 | LC1 stalna |
| | | | 2 | 1.00 | LC2 koristna etaža |
| | | | 3 | 0.60 | LC6 veter - |
| | | | 4 | 1.00 | LC7 izboène sile + |
| CO156 | S Ch | G + QiC + 0.6Qw2 + Imp2 | 1 | 1.00 | LC1 stalna |
| | | | 2 | 1.00 | LC2 koristna etaža |
| | | | 3 | 0.60 | LC6 veter - |
| | | | 4 | 1.00 | LC8 izboène sile - |
| CO157 | S Ch | G + Qs1 + Imp1 | 1 | 1.00 | LC1 stalna |
| | | | 2 | 1.00 | LC3 sneg 1 |
| | | | 3 | 1.00 | LC7 izboène sile + |
| CO158 | S Ch | G + Qs1 + Imp2 | 1 | 1.00 | LC1 stalna |
| | | | 2 | 1.00 | LC3 sneg 1 |
| | | | 3 | 1.00 | LC8 izboène sile - |
| CO159 | S Ch | G + Qs2 + Imp1 | 1 | 1.00 | LC1 stalna |
| | | | 2 | 1.00 | LC4 sneg 2 |
| | | | 3 | 1.00 | LC7 izboène sile + |
| CO160 | S Ch | G + Qs2 + Imp2 | 1 | 1.00 | LC1 stalna |
| | | | 2 | 1.00 | LC4 sneg 2 |
| | | | 3 | 1.00 | LC8 izboène sile - |
| CO161 | S Ch | G + 0.7QiC + Qs1 + Imp1 | 1 | 1.00 | LC1 stalna |
| | | | 2 | 0.70 | LC2 koristna etaža |
| | | | 3 | 1.00 | LC3 sneg 1 |
| | | | 4 | 1.00 | LC7 izboène sile + |
| CO162 | S Ch | G + 0.7QiC + Qs1 + Imp2 | 1 | 1.00 | LC1 stalna |
| | | | 2 | 0.70 | LC2 koristna etaža |
| | | | 3 | 1.00 | LC3 sneg 1 |
| | | | 4 | 1.00 | LC8 izboène sile - |
| CO163 | S Ch | G + 0.7QiC + Qs2 + Imp1 | 1 | 1.00 | LC1 stalna |
| | | | 2 | 0.70 | LC2 koristna etaža |
| | | | 3 | 1.00 | LC4 sneg 2 |
| | | | 4 | 1.00 | LC7 izboène sile + |
| CO164 | S Ch | G + 0.7QiC + Qs2 + Imp2 | 1 | 1.00 | LC1 stalna |
| | | | 2 | 0.70 | LC2 koristna etaža |
| | | | 3 | 1.00 | LC4 sneg 2 |
| | | | 4 | 1.00 | LC8 izboène sile - |
| CO165 | S Ch | G + 0.7QiC + Qs1 + 0.6Qw1 + Imp1 | 1 | 1.00 | LC1 stalna |
| | | | 2 | 0.70 | LC2 koristna etaža |
| | | | 3 | 1.00 | LC3 sneg 1 |
| | | | 4 | 0.60 | LC5 veter + |
| | | | 5 | 1.00 | LC7 izboène sile + |
| CO166 | S Ch | G + 0.7QiC + Qs1 + 0.6Qw1 + Imp2 | 1 | 1.00 | LC1 stalna |
| | | | 2 | 0.70 | LC2 koristna etaža |
| | | | 3 | 1.00 | LC3 sneg 1 |
| | | | 4 | 0.60 | LC5 veter + |
| | | | 5 | 1.00 | LC8 izboène sile - |
| CO167 | S Ch | G + 0.7QiC + Qs1 + 0.6Qw2 + Imp1 | 1 | 1.00 | LC1 stalna |
| | | | 2 | 0.70 | LC2 koristna etaža |
| | | | 3 | 1.00 | LC3 sneg 1 |
| | | | 4 | 0.60 | LC6 veter - |
| | | | 5 | 1.00 | LC7 izboène sile + |
| CO168 | S Ch | G + 0.7QiC + Qs1 + 0.6Qw2 + Imp2 | 1 | 1.00 | LC1 stalna |
| | | | 2 | 0.70 | LC2 koristna etaža |
| | | | 3 | 1.00 | LC3 sneg 1 |
| | | | 4 | 0.60 | LC6 veter - |
| | | | 5 | 1.00 | LC8 izboène sile - |
| CO169 | S Ch | G + 0.7QiC + Qs2 + 0.6Qw1 + Imp1 | 1 | 1.00 | LC1 stalna |
| | | | 2 | 0.70 | LC2 koristna etaža |
| | | | 3 | 1.00 | LC4 sneg 2 |
| | | | 4 | 0.60 | LC5 veter + |
| | | | 5 | 1.00 | LC7 izboène sile + |

## 2.5 LOAD COMBINATIONS

| Load Combin. | DS | Load Combination Description | No. | Factor | Load Case |
|---|---|---|---|---|---|
| CO170 | S Ch | G + 0.7QiC + Qs2 + 0.6Qw1 + Imp2 | 1 | 1.00 | LC1 stalna |
| | | | 2 | 0.70 | LC2 koristna etaža |
| | | | 3 | 1.00 | LC4 sneg 2 |
| | | | 4 | 0.60 | LC5 veter + |
| | | | 5 | 1.00 | LC8 izboène sile - |
| CO171 | S Ch | G + 0.7QiC + Qs2 + 0.6Qw2 + Imp1 | 1 | 1.00 | LC1 stalna |
| | | | 2 | 0.70 | LC2 koristna etaža |
| | | | 3 | 1.00 | LC4 sneg 2 |
| | | | 4 | 0.60 | LC6 veter - |
| | | | 5 | 1.00 | LC7 izboène sile + |
| CO172 | S Ch | G + 0.7QiC + Qs2 + 0.6Qw2 + Imp2 | 1 | 1.00 | LC1 stalna |
| | | | 2 | 0.70 | LC2 koristna etaža |
| | | | 3 | 1.00 | LC4 sneg 2 |
| | | | 4 | 0.60 | LC6 veter - |
| | | | 5 | 1.00 | LC8 izboène sile - |
| CO173 | S Ch | G + Qs1 + 0.6Qw1 + Imp1 | 1 | 1.00 | LC1 stalna |
| | | | 2 | 1.00 | LC3 sneg 1 |
| | | | 3 | 0.60 | LC5 veter + |
| | | | 4 | 1.00 | LC7 izboène sile + |
| CO174 | S Ch | G + Qs1 + 0.6Qw1 + Imp2 | 1 | 1.00 | LC1 stalna |
| | | | 2 | 1.00 | LC3 sneg 1 |
| | | | 3 | 0.60 | LC5 veter + |
| | | | 4 | 1.00 | LC8 izboène sile - |
| CO175 | S Ch | G + Qs1 + 0.6Qw2 + Imp1 | 1 | 1.00 | LC1 stalna |
| | | | 2 | 1.00 | LC3 sneg 1 |
| | | | 3 | 0.60 | LC6 veter - |
| | | | 4 | 1.00 | LC7 izboène sile + |
| CO176 | S Ch | G + Qs1 + 0.6Qw2 + Imp2 | 1 | 1.00 | LC1 stalna |
| | | | 2 | 1.00 | LC3 sneg 1 |
| | | | 3 | 0.60 | LC6 veter - |
| | | | 4 | 1.00 | LC8 izboène sile - |
| CO177 | S Ch | G + Qs2 + 0.6Qw1 + Imp1 | 1 | 1.00 | LC1 stalna |
| | | | 2 | 1.00 | LC4 sneg 2 |
| | | | 3 | 0.60 | LC5 veter + |
| | | | 4 | 1.00 | LC7 izboène sile + |
| CO178 | S Ch | G + Qs2 + 0.6Qw1 + Imp2 | 1 | 1.00 | LC1 stalna |
| | | | 2 | 1.00 | LC4 sneg 2 |
| | | | 3 | 0.60 | LC5 veter + |
| | | | 4 | 1.00 | LC8 izboène sile - |
| CO179 | S Ch | G + Qs2 + 0.6Qw2 + Imp1 | 1 | 1.00 | LC1 stalna |
| | | | 2 | 1.00 | LC4 sneg 2 |
| | | | 3 | 0.60 | LC6 veter - |
| | | | 4 | 1.00 | LC7 izboène sile + |
| CO180 | S Ch | G + Qs2 + 0.6Qw2 + Imp2 | 1 | 1.00 | LC1 stalna |
| | | | 2 | 1.00 | LC4 sneg 2 |
| | | | 3 | 0.60 | LC6 veter - |
| | | | 4 | 1.00 | LC8 izboène sile - |
| CO181 | S Ch | G + Qw1 + Imp1 | 1 | 1.00 | LC1 stalna |
| | | | 2 | 1.00 | LC5 veter + |
| | | | 3 | 1.00 | LC7 izboène sile + |
| CO182 | S Ch | G + Qw1 + Imp2 | 1 | 1.00 | LC1 stalna |
| | | | 2 | 1.00 | LC5 veter + |
| | | | 3 | 1.00 | LC8 izboène sile - |
| CO183 | S Ch | G + Qw2 + Imp1 | 1 | 1.00 | LC1 stalna |
| | | | 2 | 1.00 | LC6 veter - |
| | | | 3 | 1.00 | LC7 izboène sile + |
| CO184 | S Ch | G + Qw2 + Imp2 | 1 | 1.00 | LC1 stalna |
| | | | 2 | 1.00 | LC6 veter - |
| | | | 3 | 1.00 | LC8 izboène sile - |
| CO185 | S Ch | G + 0.7QiC + Qw1 + Imp1 | 1 | 1.00 | LC1 stalna |
| | | | 2 | 0.70 | LC2 koristna etaža |
| | | | 3 | 1.00 | LC5 veter + |
| | | | 4 | 1.00 | LC7 izboène sile + |
| CO186 | S Ch | G + 0.7QiC + Qw1 + Imp2 | 1 | 1.00 | LC1 stalna |
| | | | 2 | 0.70 | LC2 koristna etaža |
| | | | 3 | 1.00 | LC5 veter + |
| | | | 4 | 1.00 | LC8 izboène sile - |
| CO187 | S Ch | G + 0.7QiC + Qw2 + Imp1 | 1 | 1.00 | LC1 stalna |
| | | | 2 | 0.70 | LC2 koristna etaža |
| | | | 3 | 1.00 | LC6 veter - |
| | | | 4 | 1.00 | LC7 izboène sile + |
| CO188 | S Ch | G + 0.7QiC + Qw2 + Imp2 | 1 | 1.00 | LC1 stalna |
| | | | 2 | 0.70 | LC2 koristna etaža |
| | | | 3 | 1.00 | LC6 veter - |
| | | | 4 | 1.00 | LC8 izboène sile - |
| CO189 | S Ch | G + 0.7QiC + 0.5Qs1 + Qw1 + Imp1 | 1 | 1.00 | LC1 stalna |
| | | | 2 | 0.70 | LC2 koristna etaža |
| | | | 3 | 0.50 | LC3 sneg 1 |
| | | | 4 | 1.00 | LC5 veter + |
| | | | 5 | 1.00 | LC7 izboène sile + |
| CO190 | S Ch | G + 0.7QiC + 0.5Qs1 + Qw1 + Imp2 | 1 | 1.00 | LC1 stalna |
| | | | 2 | 0.70 | LC2 koristna etaža |
| | | | 3 | 0.50 | LC3 sneg 1 |
| | | | 4 | 1.00 | LC5 veter + |
| | | | 5 | 1.00 | LC8 izboène sile - |
| CO191 | S Ch | G + 0.7QiC + 0.5Qs1 + Qw2 + Imp1 | 1 | 1.00 | LC1 stalna |
| | | | 2 | 0.70 | LC2 koristna etaža |
| | | | 3 | 0.50 | LC3 sneg 1 |
| | | | 4 | 1.00 | LC6 veter - |
| | | | 5 | 1.00 | LC7 izboène sile + |
| CO192 | S Ch | G + 0.7QiC + 0.5Qs1 + Qw2 + Imp2 | 1 | 1.00 | LC1 stalna |
| | | | 2 | 0.70 | LC2 koristna etaža |
| | | | 3 | 0.50 | LC3 sneg 1 |
| | | | 4 | 1.00 | LC6 veter - |

## 2.5 LOAD COMBINATIONS

| Load Combin. | DS | Load Combination Description | No. | Factor | Load Case |
|---|---|---|---|---|---|
| | | | 5 | 1.00 | LC8 izboène sile - |
| CO193 | S Ch | G + 0.7QiC + 0.5Qs2 + Qw1 + Imp1 | 1 | 1.00 | LC1 stalna |
| | | | 2 | 0.70 | LC2 koristna etaža |
| | | | 3 | 0.50 | LC4 sneg 2 |
| | | | 4 | 1.00 | LC5 veter + |
| | | | 5 | 1.00 | LC7 izboène sile + |
| CO194 | S Ch | G + 0.7QiC + 0.5Qs2 + Qw1 + Imp2 | 1 | 1.00 | LC1 stalna |
| | | | 2 | 0.70 | LC2 koristna etaža |
| | | | 3 | 0.50 | LC4 sneg 2 |
| | | | 4 | 1.00 | LC5 veter + |
| | | | 5 | 1.00 | LC8 izboène sile - |
| CO195 | S Ch | G + 0.7QiC + 0.5Qs2 + Qw2 + Imp1 | 1 | 1.00 | LC1 stalna |
| | | | 2 | 0.70 | LC2 koristna etaža |
| | | | 3 | 0.50 | LC4 sneg 2 |
| | | | 4 | 1.00 | LC6 veter - |
| | | | 5 | 1.00 | LC7 izboène sile + |
| CO196 | S Ch | G + 0.7QiC + 0.5Qs2 + Qw2 + Imp2 | 1 | 1.00 | LC1 stalna |
| | | | 2 | 0.70 | LC2 koristna etaža |
| | | | 3 | 0.50 | LC4 sneg 2 |
| | | | 4 | 1.00 | LC6 veter - |
| | | | 5 | 1.00 | LC8 izboène sile - |
| CO197 | S Ch | G + 0.5Qs1 + Qw1 + Imp1 | 1 | 1.00 | LC1 stalna |
| | | | 2 | 0.50 | LC3 sneg 1 |
| | | | 3 | 1.00 | LC5 veter + |
| | | | 4 | 1.00 | LC7 izboène sile + |
| CO198 | S Ch | G + 0.5Qs1 + Qw1 + Imp2 | 1 | 1.00 | LC1 stalna |
| | | | 2 | 0.50 | LC3 sneg 1 |
| | | | 3 | 1.00 | LC5 veter + |
| | | | 4 | 1.00 | LC8 izboène sile - |
| CO199 | S Ch | G + 0.5Qs1 + Qw2 + Imp1 | 1 | 1.00 | LC1 stalna |
| | | | 2 | 0.50 | LC3 sneg 1 |
| | | | 3 | 1.00 | LC6 veter - |
| | | | 4 | 1.00 | LC7 izboène sile + |
| CO200 | S Ch | G + 0.5Qs1 + Qw2 + Imp2 | 1 | 1.00 | LC1 stalna |
| | | | 2 | 0.50 | LC3 sneg 1 |
| | | | 3 | 1.00 | LC6 veter - |
| | | | 4 | 1.00 | LC8 izboène sile - |
| CO201 | S Ch | G + 0.5Qs2 + Qw1 + Imp1 | 1 | 1.00 | LC1 stalna |
| | | | 2 | 0.50 | LC4 sneg 2 |
| | | | 3 | 1.00 | LC5 veter + |
| | | | 4 | 1.00 | LC7 izboène sile + |
| CO202 | S Ch | G + 0.5Qs2 + Qw1 + Imp2 | 1 | 1.00 | LC1 stalna |
| | | | 2 | 0.50 | LC4 sneg 2 |
| | | | 3 | 1.00 | LC5 veter + |
| | | | 4 | 1.00 | LC8 izboène sile - |
| CO203 | S Ch | G + 0.5Qs2 + Qw2 + Imp1 | 1 | 1.00 | LC1 stalna |
| | | | 2 | 0.50 | LC4 sneg 2 |
| | | | 3 | 1.00 | LC6 veter - |
| | | | 4 | 1.00 | LC7 izboène sile + |
| CO204 | S Ch | G + 0.5Qs2 + Qw2 + Imp2 | 1 | 1.00 | LC1 stalna |
| | | | 2 | 0.50 | LC4 sneg 2 |
| | | | 3 | 1.00 | LC6 veter - |
| | | | 4 | 1.00 | LC8 izboène sile - |

## 2.6 RESULT COMBINATIONS

| Result Combin | Description | Loading |
|---|---|---|
| RC9 | Auswirkung von Ersatzlasten aus DYNAM, Eigenform Nr. 1-10 | LC9/s + LC10/s + LC11/s + LC12/s + LC13/s + LC14/s + LC15/s + LC16/s + LC17/s + LC18/s |
| RC10 | GZT (EQU) - Erdbeben | LC1/s + 0.6*LC2/s + RC9 |
| RC11 | GZT (STR/GEO) - Ständig / vorübergehend - Gl. 6.10 | CO1/s or CO2/s or CO3/s or CO4/s or CO5/s or CO6/s or CO7/s or CO8/s or CO9/s or CO10/s or CO11/s or CO12/s or CO13/s or CO14/s or CO15/s or CO16/s or CO17/s or CO18/s or CO19/s or CO20/s or CO21/s or CO22/s or CO23/s or CO24/s or CO25/s or CO26/s or CO27/s or CO28/s or CO29/s or CO30/s or CO31/s or CO32/s or CO33/s or CO34/s or CO35/s or CO36/s or CO37/s or CO38/s or CO39/s or CO40/s or CO41/s or CO42/s or CO43/s or CO44/s or CO45/s or CO46/s or CO47/s or CO48/s or CO49/s or CO50/s or CO51/s or CO52/s or CO53/s or CO54/s or CO55/s or CO56/s or CO57/s or CO58/s or CO59/s or CO60/s or CO61/s or CO62/s or CO63/s or CO64/s or CO65/s or CO66/s or CO67/s or CO68/s or CO69/s or CO70/s or CO71/s or CO72/s or CO73/s or CO74/s or CO75/s or CO76/s or CO77/s or CO78/s or CO79/s or CO80/s or CO81/s or CO82/s or CO83/s or CO84/s or CO85/s or CO86/s or CO87/s or CO88/s or CO89/s or CO90/s or CO91/s or CO92/s or CO93/s or CO94/s or CO95/s or CO96/s or CO97/s or CO98/s or CO99/s or CO100/s or CO101/s or CO102/s or CO103/s or... |
| RC12 | GZG - Charakteristisch | CO137/s or CO138/s or CO139/s or CO140/s or CO141/s or CO142/s or CO143/s or CO144/s or CO145/s or CO146/s or CO147/s or CO148/s or CO149/s or CO150/s or CO151/s or CO152/s or CO153/s or CO154/s or CO155/s or CO156/s or CO157/s or CO158/s or CO159/s or CO160/s or CO161/s or CO162/s or CO163/s or CO164/s or CO165/s or CO166/s or CO167/s or CO168/s or CO169/s or CO170/s or CO171/s or CO172/s or CO173/s or CO174/s or CO175/s or CO176/s or CO177/s or CO178/s or CO179/s or CO180/s or CO181/s or CO182/s or CO183/s or CO184/s or CO185/s or CO186/s or CO187/s or CO188/s or CO189/s or CO190/s or CO191/s or CO192/s or CO193/s or CO194/s or CO195/s or CO196/s or CO197/s or CO198/s or CO199/s or CO200/s or CO201/s or CO202/s or CO203/s or CO204/s |

## 2.6.2 RESULT COMBINATIONS - CALCULATION PARAMETERS

| Result Combin. | Result Combination DS | Description | Calculation Parameters |
|---|---|---|---|
| RC9 | SEIS | Auswirkung von Ersatzlasten aus DYNAM, Eigenform Nr. 1-10 | Options : ☒ Quadratic combination: SRSS<br>☒ Use equivalent linear combination<br>◉ Positive (max) / negative (min) |

**LC1**
stalna

## 3.2 MEMBER LOADS

LC1: stalna

| No. | Reference to | On Members No. | Load Type | Load Distribution | Load Direction | Reference Length | Load Parameters Symbol | Value | Unit |
|---|---|---|---|---|---|---|---|---|---|
| 1 | Members | | Force | Uniform | Z | True Length | p | 0.650 | kN/m |
| | 37,38,43,44,49-52,72,73,76-78,88,97,99,101-104,107,109,113,117,124,134,138,142,145,148,151,158-160,177,199,204, 210-212,216,221-229,232,319,320,338,359,362,460,493,494 | | | | | | | | |
| 2 | Members | | Force | Uniform | Z | True Length | p | 0.790 | kN/m |
| | 35,36,41,42,47,48,141,144,147,150,155,156,214,315,316,336,460 | | | | | | | | |
| 3 | Members | 7,8,195, 196,252 | Force | Uniform | Z | True Length | p | 1.634 | kN/m |
| 4 | Members | 27,175,291, 292 | Force | Uniform | Z | True Length | p | 1.425 | kN/m |

## 3.5 GENERATED LOADS

LC1: stalna

| No. | Load Description | | | | |
|---|---|---|---|---|---|
| 1 | **From Area Loads via Plane** | | | | |
| | Area load direction | Global relative to the true area: | | : | ☒ZL |
| | Area of load application | ☒Fully closed plane | | | |
| | Load distribution type: | ☒Constant | | | |
| | Area load magnitude | ☒Constant | | : | 0.25 kN/m² |
| | Boundary of the area load plane | Corner nodes | | : | 342,1142,1315,93; 93,1315,1311,84; 84,1311,1305,82; 1305,1303,79,82; 79,1303,1320,80 |
| | | Note | | : | Each row in the drop down list box denotes one plane |
| | Remove influence from | Single members | | : | 206,207,296,297,298, 299,300,301,302,303, 304,306,310,311,312, 313,314 |
| | | Members parallel to member | | : | 513,514,515,516 |
| | Generating total loads in direction | $\Sigma P_{Areas}$ | X | : | 0.000 kN |
| | | | Y | : | 0.000 kN |
| | | | Z | : | 134.283 kN |
| | | $\Sigma P_{Members}$ | X | : | 0.000 kN |
| | | | Y | : | 0.000 kN |
| | | | Z | : | 134.283 kN |
| | Total moment to the origin | $\Sigma M_{Areas}$ | X | : | -2532.050 kNm |
| | | | Y | : | 6390.520 kNm |
| | | | Z | : | 0.000 kNm |
| | | $\Sigma M_{Members}$ | X | : | -2532.050 kNm |
| | | | Y | : | 6390.530 kNm |
| | | | Z | : | 0.000 kNm |
| | Cells selected for generating | Σ number of cells | | : | 5 |
| | | Σ cell area | | : | 537.132 m² |
| | Convert loads to members No. | | | : | 7,8,16,18,28,195,196, 234-238,244,245,248, 249,252,254,255,278, 305,307-309 |
| 2 | **From Area Loads via Plane** | | | | |
| | Area load direction | Global relative to the true area: | | : | ☒ZL |
| | Area of load application | ☒Fully closed plane | | | |
| | Load distribution type: | ☒Constant | | | |
| | Area load magnitude | ☒Constant | | : | 1.03 kN/m² |
| | Boundary of the area load plane | Corner nodes | | : | 106,94,80,104 |
| | | Note | | : | Each row in the drop down list box denotes one plane |
| | Remove influence from | Members parallel to member | | : | 197,521,522 |
| | Generating total loads in direction | $\Sigma P_{Areas}$ | X | : | 0.000 kN |
| | | | Y | : | 0.000 kN |
| | | | Z | : | 81.759 kN |
| | | $\Sigma P_{Members}$ | X | : | 0.000 kN |
| | | | Y | : | 0.000 kN |
| | | | Z | : | 81.759 kN |
| | Total moment to the origin | $\Sigma M_{Areas}$ | X | : | -115.281 kNm |
| | | | Y | : | 1302.330 kNm |
| | | | Z | : | 0.000 kNm |
| | | $\Sigma M_{Members}$ | X | : | -115.281 kNm |

## 3.5 GENERATED LOADS

LC1: stalna

| No. | Load Description | | | | |
|---|---|---|---|---|---|
| | | | Y | : 1302.340 | kNm |
| | | | Z | : 0.000 | kNm |
| | Cells selected for generating | Σ number of cells | | : 1 | |
| | | Σ cell area | | : 79.378 | m² |
| | Convert loads to members No. | | | : 80,90,91,106,110,121, 191,194,205,208,217, 220,350,495,499,500 | |
| 3 | **From Area Loads via Plane** | | | | |
| | Area load direction | Global relative to the true area: | | : ☒ZL | |
| | Area of load application | ☒Fully closed plane | | | |
| | Load distribution type: | ☒Constant | | | |
| | Area load magnitude | ☒Constant | | : 5.46 | kN/m² |
| | Boundary of the area load plane | Corner nodes | | : 275,52,1371,1017,45, 1008 | |
| | | Note | | : Each row in the drop down list box denotes one plane | |
| | Remove influence from | Members parallel to member | | : 147 | |
| | Generating total loads in direction | Σ P Areas | X | : 0.000 | kN |
| | | | Y | : 0.000 | kN |
| | | | Z | : 1268.430 | kN |
| | | ΣP Members | X | : 0.000 | kN |
| | | | Y | : 0.000 | kN |
| | | | Z | : 1268.430 | kN |
| | Total moment to the origin | Σ M Areas | X | : 1022.300 | kNm |
| | | | Y | : 17980.600 | kNm |
| | | | Z | : 0.000 | kNm |
| | | ΣM Members | X | : 1022.300 | kNm |
| | | | Y | : 17980.600 | kNm |
| | | | Z | : 0.000 | kNm |
| | Cells selected for generating | Σ number of cells | | : 15 | |
| | | Σ cell area | | : 232.314 | m² |
| | Convert loads to members No. | | | : 107,108,111,114,115, 118,119,124,126,128, 130,135-137,153,154, 156,157,202,317,318, 321-334,337,363-373, 460 | |
| 4 | **From Area Loads via Plane** | | | | |
| | Area load direction | Global relative to the true area: | | : ☒ZL | |
| | Area of load application | ☒Fully closed plane | | | |
| | Load distribution type: | ☒Combined | | | |
| | Area load magnitude | ☒Constant | | : 0.25 | kN/m² |
| | Boundary of the area load plane | Corner nodes | | : 94,1320,1332,106 | |
| | | Note | | : Each row in the drop down list box denotes one plane | |
| | Remove influence from | Single members | | : 80,91,106,121,132,191, 203,205,217,280,281, 283,284,286,287,289, 290,500 | |
| | | Members parallel to member | | : 507,508,511,512 | |
| | Generating total loads in direction | Σ P Areas | X | : 0.000 | kN |
| | | | Y | : 0.000 | kN |
| | | | Z | : 110.858 | kN |
| | | ΣP Members | X | : 0.000 | kN |
| | | | Y | : 0.000 | kN |
| | | | Z | : 110.858 | kN |
| | Total moment to the origin | Σ M Areas | X | : -863.030 | kNm |
| | | | Y | : 1765.840 | kNm |
| | | | Z | : 0.000 | kNm |
| | | ΣM Members | X | : -863.030 | kNm |
| | | | Y | : 1765.840 | kNm |
| | | | Z | : 0.000 | kNm |
| | Cells selected for generating | Σ number of cells | | : 20 | |
| | | Σ cell area | | : 443.432 | m² |
| | Convert loads to members No. | | | : 22,24,25,27,90,110, 175,189,192,194,197, 208,220,254-258,262, 266-268,272-274,278, 291,292,350,495,496, 499 | |
| 5 | **From Area Loads via Plane** | | | | |
| | Area load direction | Global relative to the true area: | | : ☒ZL | |
| | Area of load application | ☒Fully closed plane | | | |
| | Load distribution type: | ☒Combined | | | |
| | Area load magnitude | ☒Constant | | : 1.03 | kN/m² |
| | Boundary of the area load plane | Corner nodes | | : 273,1086,1144,1127 | |

## 3.5 GENERATED LOADS

LC1: stalna

| No. | Load Description | | | | |
|---|---|---|---|---|---|
| | Note | | : | Each row in the drop down list box denotes one plane | |
| | Remove influence from | Members parallel to member | : | 65,100,181,487,488, 490 | |
| | Generating total loads in direction | $\Sigma P_{Areas}$ | X | : 0.000 | kN |
| | | | Y | : 0.000 | kN |
| | | | Z | : 146.382 | kN |
| | | $\Sigma P_{Members}$ | X | : 0.000 | kN |
| | | | Y | : 0.000 | kN |
| | | | Z | : 146.382 | kN |
| | Total moment to the origin | $\Sigma M_{Areas}$ | X | : 324.969 | kNm |
| | | | Y | : 2096.030 | kNm |
| | | | Z | : 0.000 | kNm |
| | | $\Sigma M_{Members}$ | X | : 324.968 | kNm |
| | | | Y | : 2096.030 | kNm |
| | | | Z | : 0.000 | kNm |
| | Cells selected for generating | Σ number of cells | | : 2 | |
| | | Σ cell area | | : 142.119 | $m^2$ |
| | Convert loads to members No. | | | : 51,82,83,88,99, 101-103,105,138, 159-165,169-172,174, 184-187,339 | |
| 6 | **From Area Loads via Plane** | | | | |
| | Area load direction | Global relative to the true area: | | : ☒ZL | |
| | Area of load application | ☒Fully closed plane | | | |
| | Load distribution type: | ☒Combined | | | |
| | Area load magnitude | ☒Constant | | : 1.03 | $kN/m^2$ |
| | Boundary of the area load plane | Corner nodes | | : 106,37,1129,104 | |
| | | Note | | : Each row in the drop down list box denotes one plane | |
| | Remove influence from | Members parallel to member | | : 344 | |
| | Generating total loads in direction | $\Sigma P_{Areas}$ | X | : 0.000 | kN |
| | | | Y | : 0.000 | kN |
| | | | Z | : 9.238 | kN |
| | | $\Sigma P_{Members}$ | X | : 0.000 | kN |
| | | | Y | : 0.000 | kN |
| | | | Z | : 9.238 | kN |
| | Total moment to the origin | $\Sigma M_{Areas}$ | X | : -13.025 | kNm |
| | | | Y | : 0.636 | kNm |
| | | | Z | : 0.000 | kNm |
| | | $\Sigma M_{Members}$ | X | : -13.025 | kNm |
| | | | Y | : 0.636 | kNm |
| | | | Z | : 0.000 | kNm |
| | Cells selected for generating | Σ number of cells | | : 2 | |
| | | Σ cell area | | : 8.969 | $m^2$ |
| | Convert loads to members No. | | | : 175,219,279,285,353, 523,524 | |
| 7 | **From Area Loads via Plane** | | | | |
| | Area load direction | Global relative to the true area: | | : ☒ZL | |
| | Area of load application | ☒Fully closed plane | | | |
| | Load distribution type: | ☒Combined | | | |
| | Area load magnitude | ☒Constant | | : 1.03 | $kN/m^2$ |
| | Boundary of the area load plane | Corner nodes | | : 1130,1427,1428,1424 | |
| | | Note | | : Each row in the drop down list box denotes one plane | |
| | Remove influence from | Members parallel to member | | : 354 | |
| | Generating total loads in direction | $\Sigma P_{Areas}$ | X | : 0.000 | kN |
| | | | Y | : 0.000 | kN |
| | | | Z | : 7.516 | kN |
| | | $\Sigma P_{Members}$ | X | : 0.000 | kN |
| | | | Y | : 0.000 | kN |
| | | | Z | : 7.516 | kN |
| | Total moment to the origin | $\Sigma M_{Areas}$ | X | : -29.405 | kNm |
| | | | Y | : -11.809 | kNm |
| | | | Z | : 0.000 | kNm |
| | | $\Sigma M_{Members}$ | X | : -29.404 | kNm |
| | | | Y | : -11.808 | kNm |
| | | | Z | : 0.000 | kNm |
| | Cells selected for generating | Σ number of cells | | : 1 | |
| | | Σ cell area | | : 7.297 | $m^2$ |
| | Convert loads to members No. | | | : 29,348,523,525 | |
| 8 | **From Area Loads via Plane** | | | | |
| | Area load direction | Global relative to the true area: | | : ☒ZL | |

## 3.5 GENERATED LOADS

LC1: stalna

| No. | Load Description | | | | |
|---|---|---|---|---|---|
| | Area of load application | ☒Fully closed plane | | | |
| | Load distribution type: | ☒Combined | | | |
| | Area load magnitude | ☒Constant | : | 1.03 | kN/m² |
| | Boundary of the area load plane | Corner nodes | : | 64,40,1129,1130 | |
| | | Note | : | Each row in the drop down list box denotes one plane | |
| | Remove influence from | Members parallel to member | : | 355 | |
| | Generating total loads in direction | Σ P Areas | X | : 0.000 | kN |
| | | | Y | : 0.000 | kN |
| | | | Z | : 3.010 | kN |
| | | ΣP Members | X | : 0.000 | kN |
| | | | Y | : 0.000 | kN |
| | | | Z | : 3.010 | kN |
| | Total moment to the origin | Σ M Areas | X | : -5.799 | kNm |
| | | | Y | : -7.152 | kNm |
| | | | Z | : 0.000 | kNm |
| | | ΣM Members | X | : -5.799 | kNm |
| | | | Y | : -7.152 | kNm |
| | | | Z | : 0.000 | kNm |
| | Cells selected for generating | Σ number of cells | : | 1 | |
| | | Σ cell area | : | 2.922 | m² |
| | Convert loads to members No. | | : | 29,357 | |
| 9 | **From Area Loads via Plane** | | | | |
| | Area load direction | Global relative to the projected area: | : | ☒ZP | |
| | Area of load application | ☒Fully closed plane | | | |
| | Load distribution type: | ☒Combined | | | |
| | Area load magnitude | ☒Constant | : | 5.46 | kN/m² |
| | Boundary of the area load plane | Corner nodes | : | 1017,1422,1372,1371 | |
| | | Note | : | Each row in the drop down list box denotes one plane | |
| | Remove influence from | Members parallel to member | : | 360 | |
| | Generating total loads in direction | Σ P Areas | X | : 0.000 | kN |
| | | | Y | : 0.000 | kN |
| | | | Z | : 4.865 | kN |
| | | ΣP Members | X | : 0.000 | kN |
| | | | Y | : 0.000 | kN |
| | | | Z | : 4.865 | kN |
| | Total moment to the origin | Σ M Areas | X | : -9.372 | kNm |
| | | | Y | : -14.380 | kNm |
| | | | Z | : 0.000 | kNm |
| | | ΣM Members | X | : -9.372 | kNm |
| | | | Y | : -14.380 | kNm |
| | | | Z | : 0.000 | kNm |
| | Cells selected for generating | Σ number of cells | : | 1 | |
| | | Σ cell area | : | 0.891 | m² |
| | Convert loads to members No. | | : | 157,361 | |

## STALNA G.

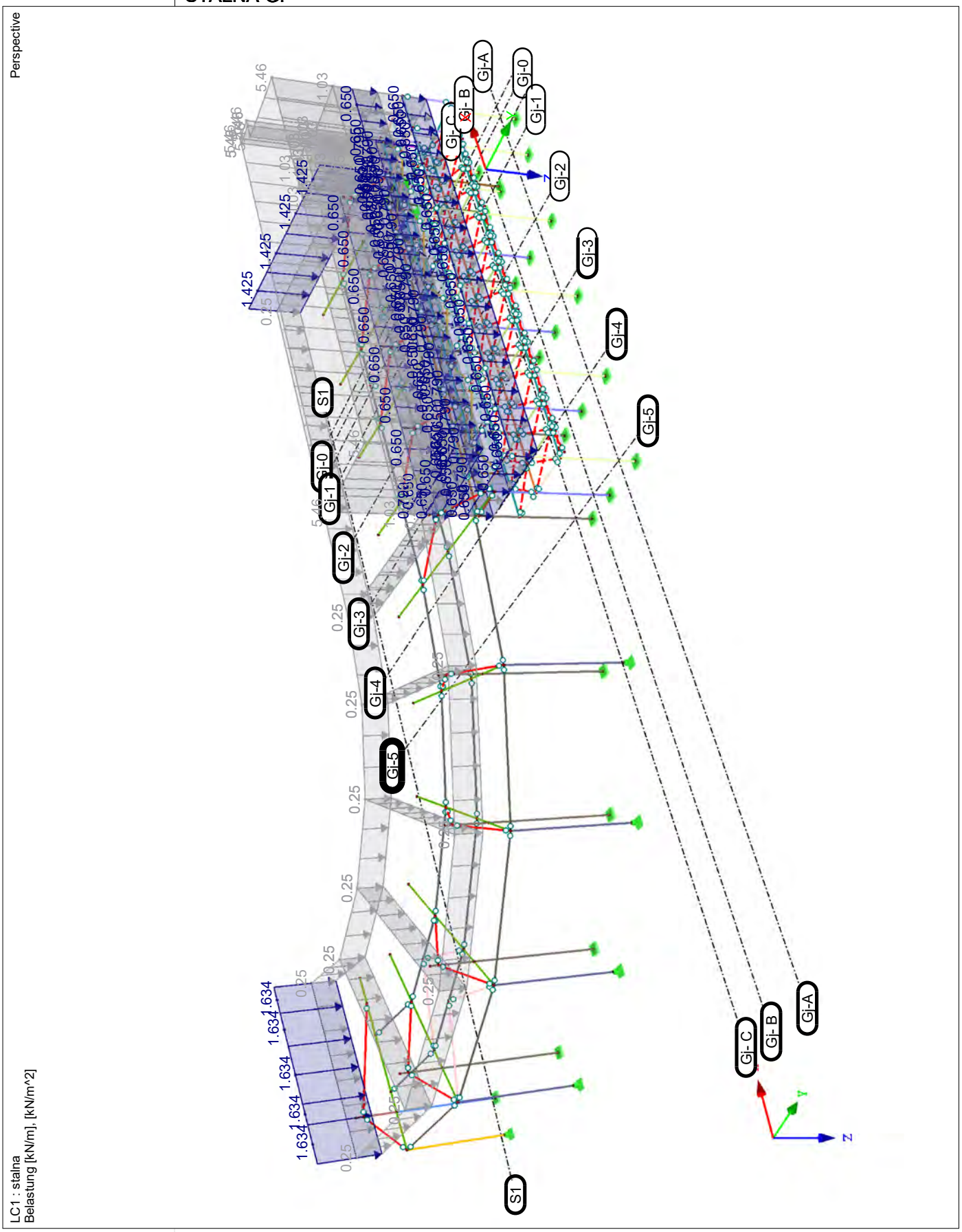
Perspective
LC1 : stalna
Belastung [kN/m], [kN/m^2]
Gi-A
Gi-0
Gi- B
Gi-1
Gi- C
Gi-2
Gi-3
Gi-4
Gi-5
S1
1.425
0.650
1.634
0.25

**LC2**
koristna etaža

## 3.5 GENERATED LOADS

LC2: koristna etaža

| No. | Load Description | | | | |
|---|---|---|---|---|---|
| 1 | **From Area Loads via Plane** | | | | |
| | Area load direction | Global relative to the true area: | : | ☒ZL | |
| | Area of load application | ☒Fully closed plane | | | |
| | Load distribution type: | ☒Constant | | | |
| | Area load magnitude | ☒Constant | : | 3.00 | kN/m² |
| | Boundary of the area load plane | Corner nodes | : | 275,52,1371,1017,45,1008 | |
| | | Note | : | Each row in the drop down list box denotes one plane | |
| | Remove influence from | Members parallel to member | : | 147 | |
| | Generating total loads in direction | Σ P Areas | X : | 0.000 | kN |
| | | | Y : | 0.000 | kN |
| | | | Z : | 696.941 | kN |
| | | ΣP Members | X : | 0.000 | kN |
| | | | Y : | 0.000 | kN |
| | | | Z : | 696.941 | kN |
| | Total moment to the origin | Σ M Areas | X : | 561.702 | kNm |
| | | | Y : | 9879.450 | kNm |
| | | | Z : | 0.000 | kNm |
| | | ΣM Members | X : | 561.702 | kNm |
| | | | Y : | 9879.450 | kNm |
| | | | Z : | 0.000 | kNm |
| | Cells selected for generating | Σ number of cells | : | 15 | |
| | | Σ cell area | : | 232.314 | m² |
| | Convert loads to members No. | | : | 107,108,111,114,115,118,119,124,126,128,130,135-137,153,154,156,157,202,317,318,321-334,337,363-373,460 | |
| 2 | **From Area Loads via Plane** | | | | |
| | Area load direction | Global relative to the projected area: | : | ☒ZP | |
| | Area of load application | ☒Fully closed plane | | | |
| | Load distribution type: | ☒Combined | | | |
| | Area load magnitude | ☒Constant | : | 3.00 | kN/m² |
| | Boundary of the area load plane | Corner nodes | : | 1017,1422,1372,1371 | |
| | | Note | : | Each row in the drop down list box denotes one plane | |
| | Remove influence from | Members parallel to member | : | 360 | |
| | Generating total loads in direction | Σ P Areas | X : | 0.000 | kN |
| | | | Y : | 0.000 | kN |
| | | | Z : | 2.673 | kN |
| | | ΣP Members | X : | 0.000 | kN |
| | | | Y : | 0.000 | kN |
| | | | Z : | 2.673 | kN |
| | Total moment to the origin | Σ M Areas | X : | -5.149 | kNm |
| | | | Y : | -7.901 | kNm |
| | | | Z : | 0.000 | kNm |
| | | ΣM Members | X : | -5.149 | kNm |
| | | | Y : | -7.901 | kNm |
| | | | Z : | 0.000 | kNm |
| | Cells selected for generating | Σ number of cells | : | 1 | |
| | | Σ cell area | : | 0.891 | m² |
| | Convert loads to members No. | | : | 157,361 | |

## KORISTNA Q

LC2 : koristna etaža
Belastung [kN/m^2]
Schnittgrößen M-z

Perspective

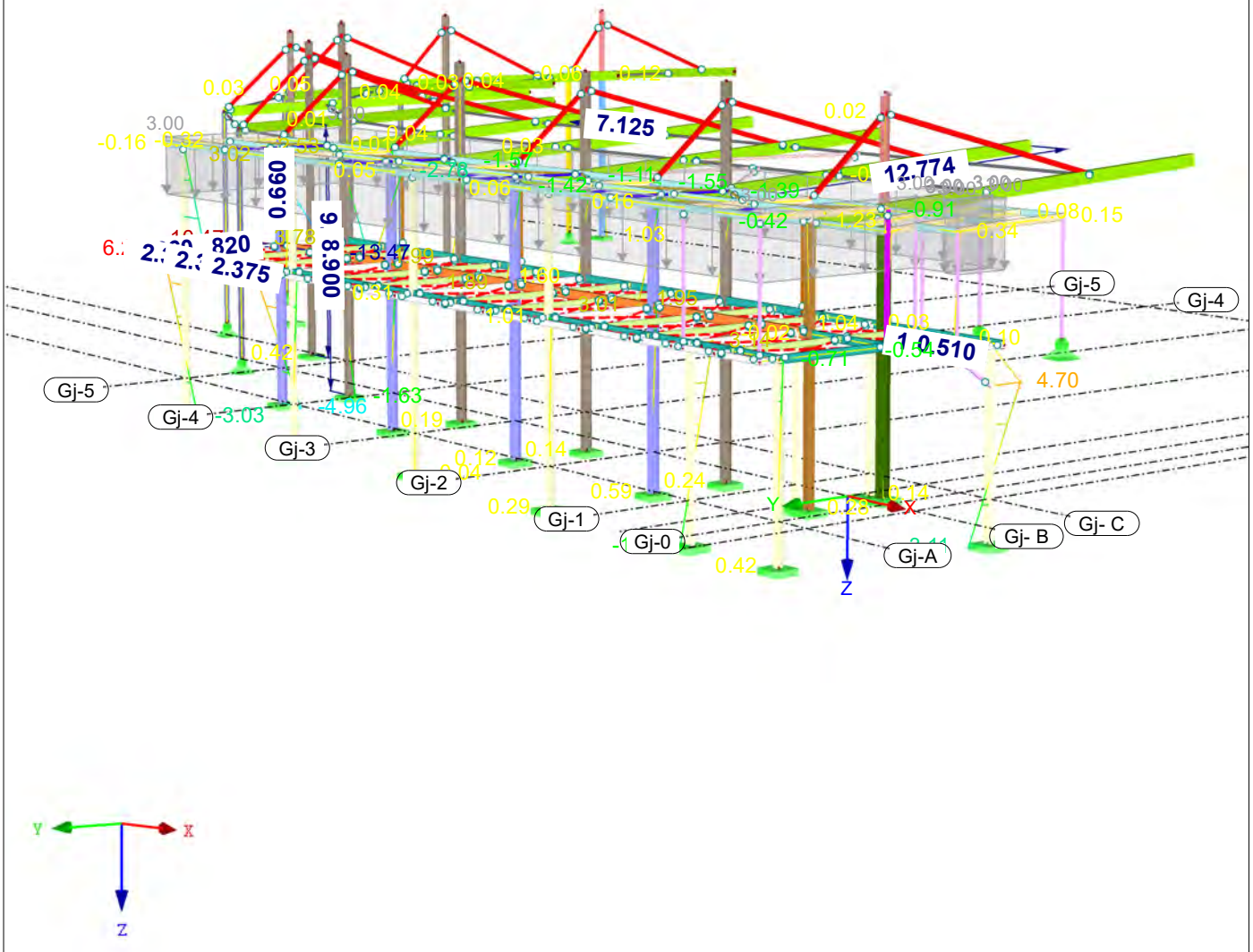


Max M-z: 10.47, Min M-z: -13.47 [kNm]

**LC3**
sneg 1

## 3.2 MEMBER LOADS

LC3: sneg 1

| No. | Reference to | On Members No. | Load Type | Load Distribution | Load Direction | Reference Length | Load Parameters Symbol | Value | Unit |
|---|---|---|---|---|---|---|---|---|---|
| 2 | Members | 7,8,195, 196,252 | Force | Uniform | Z | Projection Z | p | 3.920 | kN/m |
| 3 | Members | 27,175,291, 292 | Force | Uniform | Z | Projection Z | p | 3.420 | kN/m |

## 3.5 GENERATED LOADS

LC3: sneg 1

| No. | Load Description | | | | |
|---|---|---|---|---|---|
| 1 | **From Area Loads via Plane** | | | | |
| | Area load direction | Global relative to the projected area: | | : | ☒ZP |
| | Area of load application | ☒Fully closed plane | | | |
| | Load distribution type: | ☒Constant | | | |
| | Area load magnitude | ☒Constant | | : | 1.10 kN/m² |
| | Boundary of the area load plane | Corner nodes | | : | 342,1142,1315,93; 84,93,1315,1311; 82,84,1311,1305; 79,82,1305,1303; 79,1303,1320,80; 94,1320,1332,106 |
| | | Note | | : | Each row in the drop down list box denotes one plane |
| | Remove influence from | Single members | | : | 80,91,106,121,132,191, 203,205,206,207,217, 280,281,283,284,286, 287,289,290,296,297, 298,299,300,301,302, 303,304,306,310,311, 312,313,314,500 |
| | | Members parallel to member | | : | 507,508,511,512,513, 514,515,516 |
| | Generating total loads in direction | $\Sigma P_{Areas}$ | X | : | 0.000 kN |
| | | | Y | : | 0.000 kN |
| | | | Z | : | 1076.580 kN |
| | | $\Sigma P_{Members}$ | X | : | 0.000 kN |
| | | | Y | : | 0.000 kN |
| | | | Z | : | 1076.580 kN |
| | Total moment to the origin | $\Sigma M_{Areas}$ | X | : | -14910.000 kNm |
| | | | Y | : | 35819.800 kNm |
| | | | Z | : | 0.000 kNm |
| | | $\Sigma M_{Members}$ | X | : | -14910.000 kNm |
| | | | Y | : | 35819.800 kNm |
| | | | Z | : | 0.000 kNm |
| | Cells selected for generating | Σ number of cells | | : | 33 |
| | | Σ cell area | | : | 978.711 m² |
| | Convert loads to members No. | | | : | 7,8,16,18,22,24,25,27, 28,90,110,175,189,192, 194-197,208,220, 234-238,244,245,248, 249,252,254-258,262, 266-268,272-274,278, 291,292,305,307-309, 350,495,496,499 |
| 2 | **From Area Loads via Plane** | | | | |
| | Area load direction | Global relative to the projected area: | | : | ☒ZP |
| | Area of load application | ☒Fully closed plane | | | |
| | Load distribution type: | ☒Combined | | | |
| | Area load magnitude | ☒Constant | | : | 1.10 kN/m² |
| | Boundary of the area load plane | Corner nodes | | : | 1127,273,1086,1144 |
| | | Note | | : | Each row in the drop down list box denotes one plane |
| | Remove influence from | Members parallel to member | | : | 65,71,487,488,490 |
| | Generating total loads in direction | $\Sigma P_{Areas}$ | X | : | 0.000 kN |
| | | | Y | : | 0.000 kN |
| | | | Z | : | 156.316 kN |
| | | $\Sigma P_{Members}$ | X | : | 0.000 kN |
| | | | Y | : | 0.000 kN |
| | | | Z | : | 156.316 kN |
| | Total moment to the origin | $\Sigma M_{Areas}$ | X | : | 347.022 kNm |
| | | | Y | : | 2238.270 kNm |
| | | | Z | : | 0.000 kNm |
| | | $\Sigma M_{Members}$ | X | : | 347.022 kNm |
| | | | Y | : | 2238.270 kNm |
| | | | Z | : | 0.000 kNm |
| | Cells selected for generating | Σ number of cells | | : | 2 |
| | | Σ cell area | | : | 142.106 m² |
| | Convert loads to members No. | | | : | 51,82,83,88,99,1 |

## 3.5 GENERATED LOADS

LC3: sneg 1

| No. | Load Description | | | | |
|---|---|---|---|---|---|
| | | | | 101-103,105,138, 159-165,169-172,174, 177,181-187,339 | |
| 3 | **From Area Loads via Plane** | | | | |
| | Area load direction | Global relative to the projected area: | : | ☒ZP | |
| | Area of load application | ☒Fully closed plane | | | |
| | Load distribution type: | ☒Combined | | | |
| | Area load magnitude | ☒Constant | : | 1.10 | kN/m² |
| | Boundary of the area load plane | Corner nodes | : | 106,37,1129,104 | |
| | | Note | : | Each row in the drop down list box denotes one plane | |
| | Remove influence from | Members parallel to member | : | 279 | |
| | Generating total loads in direction | $\Sigma P_{Areas}$ | X | : 0.000 | kN |
| | | | Y | : 0.000 | kN |
| | | | Z | : 9.847 | kN |
| | | $\Sigma P_{Members}$ | X | : 0.000 | kN |
| | | | Y | : 0.000 | kN |
| | | | Z | : 9.847 | kN |
| | Total moment to the origin | $\Sigma M_{Areas}$ | X | : -13.884 | kNm |
| | | | Y | : 0.678 | kNm |
| | | | Z | : 0.000 | kNm |
| | | $\Sigma M_{Members}$ | X | : -13.884 | kNm |
| | | | Y | : 0.678 | kNm |
| | | | Z | : 0.000 | kNm |
| | Cells selected for generating | Σ number of cells | : | 2 | |
| | | Σ cell area | : | 8.952 | m² |
| | Convert loads to members No. | | : | 175,219,285,344,353, 523,524 | |
| 4 | **From Area Loads via Plane** | | | | |
| | Area load direction | Global relative to the projected area: | : | ☒ZP | |
| | Area of load application | ☒Fully closed plane | | | |
| | Load distribution type: | ☒Combined | | | |
| | Area load magnitude | ☒Constant | : | 1.10 | kN/m² |
| | Boundary of the area load plane | Corner nodes | : | 1424,1130,1427,1428 | |
| | | Note | : | Each row in the drop down list box denotes one plane | |
| | Remove influence from | Members parallel to member | : | 354 | |
| | Generating total loads in direction | $\Sigma P_{Areas}$ | X | : 0.000 | kN |
| | | | Y | : 0.000 | kN |
| | | | Z | : 8.025 | kN |
| | | $\Sigma P_{Members}$ | X | : 0.000 | kN |
| | | | Y | : 0.000 | kN |
| | | | Z | : 8.024 | kN |
| | Total moment to the origin | $\Sigma M_{Areas}$ | X | : -31.393 | kNm |
| | | | Y | : -12.607 | kNm |
| | | | Z | : 0.000 | kNm |
| | | $\Sigma M_{Members}$ | X | : -31.392 | kNm |
| | | | Y | : -12.607 | kNm |
| | | | Z | : 0.000 | kNm |
| | Cells selected for generating | Σ number of cells | : | 1 | |
| | | Σ cell area | : | 7.295 | m² |
| | Convert loads to members No. | | : | 29,348,523,525 | |
| 5 | **From Area Loads via Plane** | | | | |
| | Area load direction | Global relative to the projected area: | : | ☒ZP | |
| | Area of load application | ☒Fully closed plane | | | |
| | Load distribution type: | ☒Combined | | | |
| | Area load magnitude | ☒Constant | : | 1.10 | kN/m² |
| | Boundary of the area load plane | Corner nodes | : | 40,64,1130,1129 | |
| | | Note | : | Each row in the drop down list box denotes one plane | |
| | Remove influence from | Members parallel to member | : | 279,355 | |
| | Generating total loads in direction | $\Sigma P_{Areas}$ | X | : 0.000 | kN |
| | | | Y | : 0.000 | kN |
| | | | Z | : 3.209 | kN |
| | | $\Sigma P_{Members}$ | X | : 0.000 | kN |
| | | | Y | : 0.000 | kN |
| | | | Z | : 3.209 | kN |
| | Total moment to the origin | $\Sigma M_{Areas}$ | X | : -6.183 | kNm |
| | | | Y | : -7.626 | kNm |
| | | | Z | : 0.000 | kNm |
| | | $\Sigma M_{Members}$ | X | : -6.183 | kNm |
| | | | Y | : -7.626 | kNm |
| | | | Z | : 0.000 | kNm |

## 3.5 GENERATED LOADS

LC3: sneg 1

| No. | Load Description | | | | |
|---|---|---|---|---|---|
| | Cells selected for generating | Σ number of cells | : | 1 | |
| | | Σ cell area | : | 2.918 | $m^2$ |
| | Convert loads to members No. | | : | 29,357 | |

## SNEG_1

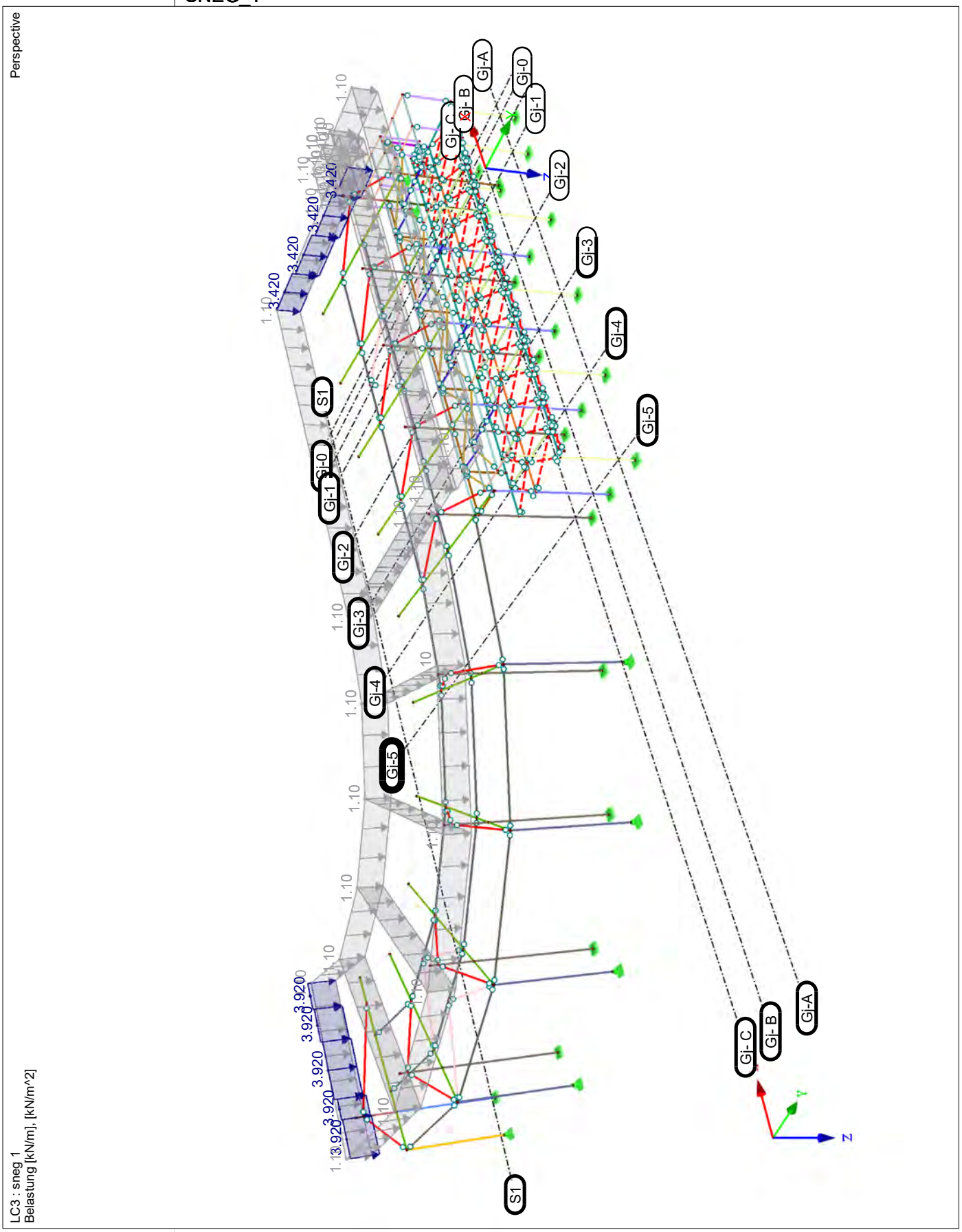
Perspective
Gi-A
Gi-0
Gi-1
Gi-2
Gi-3
Gi-4
Gi-5
Gi- B
Gi- C
S1
3.420
3.920
1.10
LC3 : sneg 1
Belastung [kN/m], [kN/m^2]

**LC4**
sneg 2

## 3.2 MEMBER LOADS

LC4: sneg 2

| No. | Reference to | On Members No. | Load Type | Load Distribution | Load Direction | Reference Length | Load Parameters Symbol | Value | Unit |
|---|---|---|---|---|---|---|---|---|---|
| 1 | Members | 90,110,194, 208,220, 350,495,499 | Force | Uniform | Z | True Length | p | 1.440 | kN/m |
| 2 | Members | 27,175,291 | Force | Uniform | Z | Projection Z | p | 4.275 | kN/m |
| 3 | Members | 7,8,195, 196,252 | Force | Uniform | Z | Projection Z | p | 4.900 | kN/m |
| 4 | Members | 292 | Force | Uniform | Z | Projection Z | p | 4.275 | kN/m |

## 3.5 GENERATED LOADS

LC4: sneg 2

| No. | Load Description | | | | |
|---|---|---|---|---|---|
| 1 | **From Area Loads via Plane** | | | | |
| | Area load direction | Global relative to the projected area: | | : | ☒ZP |
| | Area of load application | ☒Fully closed plane | | | |
| | Load distribution type: | ☒Constant | | | |
| | Area load magnitude | ☒Constant | | : | 1.38 kN/m² |
| | Boundary of the area load plane | Corner nodes | | : | 342,1142,1315,93; 84,93,1315,1311; 82,84,1311,1305; 79,82,1305,1303; 79,1303,1320,80; 94,1320,1332,106 |
| | | Note | | : | Each row in the drop down list box denotes one plane |
| | Remove influence from | Single members | | : | 80,91,106,121,132,191, 203,205,206,207,217, 280,281,283,284,286, 287,289,290,296,297, 298,299,300,301,302, 303,304,306,310,311, 312,313,314,500 |
| | | Members parallel to member | | : | 507,508,511,512,513, 514,515,516 |
| | Generating total loads in direction | $\Sigma P_{Areas}$ | X | : | 0.000 kN |
| | | | Y | : | 0.000 kN |
| | | | Z | : | 1350.620 kN |
| | | $\Sigma P_{Members}$ | X | : | 0.000 kN |
| | | | Y | : | 0.000 kN |
| | | | Z | : | 1350.620 kN |
| | Total moment to the origin | $\Sigma M_{Areas}$ | X | : | -18705.300 kNm |
| | | | Y | : | 44937.600 kNm |
| | | | Z | : | 0.000 kNm |
| | | $\Sigma M_{Members}$ | X | : | -18705.300 kNm |
| | | | Y | : | 44937.600 kNm |
| | | | Z | : | 0.000 kNm |
| | Cells selected for generating | Σ number of cells | | : | 33 |
| | | Σ cell area | | : | 978.711 m² |
| | Convert loads to members No. | | | : | 7,8,16,18,22,24,25,27, 28,90,110,175,189,192, 194-197,208,220, 234-238,244,245,248, 249,252,254-258,262, 266-268,272-274,278, 291,292,305,307-309, 350,495,496,499 |
| 2 | **From Area Loads via Plane** | | | | |
| | Area load direction | Global relative to the projected area: | | : | ☒ZP |
| | Area of load application | ☒Fully closed plane | | | |
| | Load distribution type: | ☒Combined | | | |
| | Area load magnitude | ☒Constant | | : | 1.10 kN/m² |
| | Boundary of the area load plane | Corner nodes | | : | 106,104,1129,37 |
| | | Note | | : | Each row in the drop down list box denotes one plane |
| | Remove influence from | Members parallel to member | | : | 279 |
| | Generating total loads in direction | $\Sigma P_{Areas}$ | X | : | 0.000 kN |
| | | | Y | : | 0.000 kN |
| | | | Z | : | 9.847 kN |
| | | $\Sigma P_{Members}$ | X | : | 0.000 kN |
| | | | Y | : | 0.000 kN |
| | | | Z | : | 9.847 kN |
| | Total moment to the origin | $\Sigma M_{Areas}$ | X | : | -13.884 kNm |
| | | | Y | : | 0.678 kNm |
| | | | Z | : | 0.000 kNm |
| | | $\Sigma M_{Members}$ | X | : | -13.884 kNm |
| | | | Y | : | 0.678 kNm |
| | | | Z | : | 0.000 kNm |
| | Cells selected for generating | Σ number of cells | | : | 2 |
| | | Σ cell area | | : | 8.952 m² |

## 3.5 GENERATED LOADS

LC4: sneg 2

| No. | Load Description | | | | |
|---|---|---|---|---|---|
| | Convert loads to members No. | | : | 175,219,285,344,353, 523,524 | |
| 3 | **From Area Loads via Plane** | | | | |
| | Area load direction | Global relative to the projected area: | : | ☒ZP | |
| | Area of load application | ☒Fully closed plane | | | |
| | Load distribution type: | ☒Combined | | | |
| | Area load magnitude | ☒Constant | : | 1.10 | kN/m² |
| | Boundary of the area load plane | Corner nodes | : | 1424,1130,1427,1428 | |
| | | Note | : | Each row in the drop down list box denotes one plane | |
| | Remove influence from | Members parallel to member | : | 354 | |
| | Generating total loads in direction | $\Sigma P_{Areas}$ | X | : 0.000 | kN |
| | | | Y | : 0.000 | kN |
| | | | Z | : 8.025 | kN |
| | | $\Sigma P_{Members}$ | X | : 0.000 | kN |
| | | | Y | : 0.000 | kN |
| | | | Z | : 8.024 | kN |
| | Total moment to the origin | $\Sigma M_{Areas}$ | X | : -31.393 | kNm |
| | | | Y | : -12.607 | kNm |
| | | | Z | : 0.000 | kNm |
| | | $\Sigma M_{Members}$ | X | : -31.392 | kNm |
| | | | Y | : -12.607 | kNm |
| | | | Z | : 0.000 | kNm |
| | Cells selected for generating | Σ number of cells | : | 1 | |
| | | Σ cell area | : | 7.295 | m² |
| | Convert loads to members No. | | : | 29,348,523,525 | |
| 4 | **From Area Loads via Plane** | | | | |
| | Area load direction | Global relative to the projected area: | : | ☒ZP | |
| | Area of load application | ☒Fully closed plane | | | |
| | Load distribution type: | ☒Combined | | | |
| | Area load magnitude | ☒Constant | : | 1.10 | kN/m² |
| | Boundary of the area load plane | Corner nodes | : | 40,64,1130,1129 | |
| | | Note | : | Each row in the drop down list box denotes one plane | |
| | Remove influence from | Single members | : | 279 | |
| | | Members parallel to member | : | 355 | |
| | Generating total loads in direction | $\Sigma P_{Areas}$ | X | : 0.000 | kN |
| | | | Y | : 0.000 | kN |
| | | | Z | : 3.209 | kN |
| | | $\Sigma P_{Members}$ | X | : 0.000 | kN |
| | | | Y | : 0.000 | kN |
| | | | Z | : 3.209 | kN |
| | Total moment to the origin | $\Sigma M_{Areas}$ | X | : -6.183 | kNm |
| | | | Y | : -7.626 | kNm |
| | | | Z | : 0.000 | kNm |
| | | $\Sigma M_{Members}$ | X | : -6.183 | kNm |
| | | | Y | : -7.626 | kNm |
| | | | Z | : 0.000 | kNm |
| | Cells selected for generating | Σ number of cells | : | 1 | |
| | | Σ cell area | : | 2.918 | m² |
| | Convert loads to members No. | | : | 29,357 | |

## SNEG 2- KOPICENJE

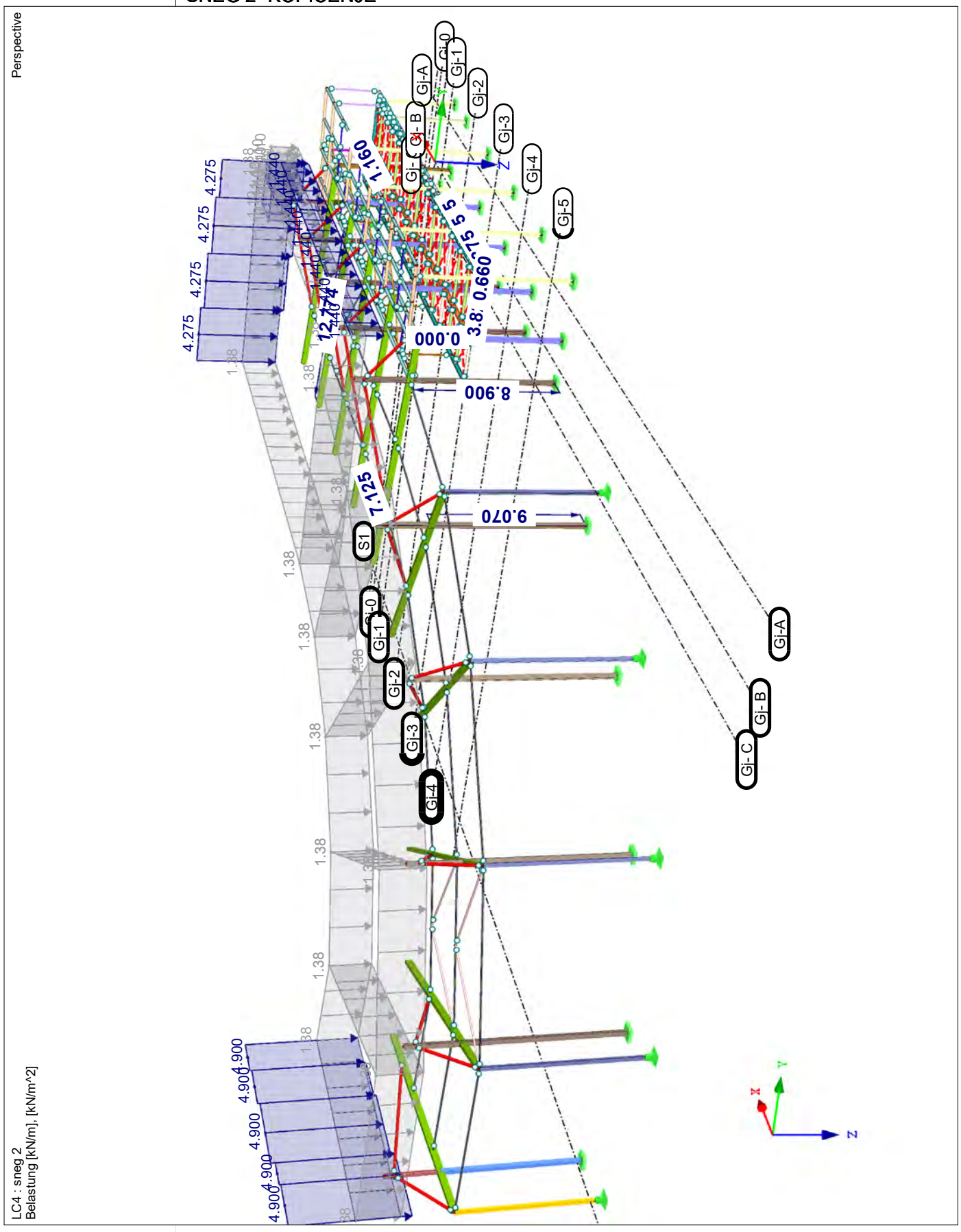

**LC5**
veter +

## 3.2 MEMBER LOADS

LC5: veter +

| No. | Reference to | On Members No. | Load Type | Load Distribution | Load Direction | Reference Length | Load Parameters Symbol | Value | Unit |
|---|---|---|---|---|---|---|---|---|---|
| 2 | Members | | Force | Uniform | Y | True Length | p | -1.160 | kN/m |
| | 51,73,76-78,88,99,101-103,134,138,159,160,199,211,223-228,359,362 | | | | | | | | |
| 3 | Members | | Force | Uniform | Y | True Length | p | -0.460 | kN/m |
| | 37,38,43,44,49,50,72,104,109,113,117,142,145,148,151,158,204,210,212,216,221,222,229,230,232,319,320,338,494 | | | | | | | | |
| 5 | Members | 52,97,107, 124,177, 460,493 | Force | Uniform | X | True Length | p | -1.280 | kN/m |
| 6 | Members | | Force | Uniform | Y | True Length | p | -1.420 | kN/m |
| | 35,36,41,42,47,48,141,144,147,150,155,156,214,315,316,336 | | | | | | | | |
| 8 | Members | 460 | Force | Uniform | X | True Length | p | -1.550 | kN/m |
| 9 | Members | 27,175,291, 292 | Force | Uniform | z | True Length | p | 1.425 | kN/m |
| 10 | Members | 7,8,195, 196,252 | Force | Uniform | z | True Length | p | 1.634 | kN/m |

## 3.5 GENERATED LOADS

LC5: veter +

| No. | Load Description | | | | |
|---|---|---|---|---|---|
| 1 | **From Wind Loads (Flat Roof)** | | | | |
| | 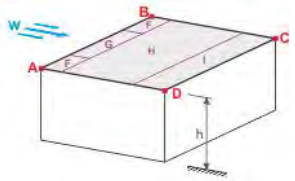  | | | | |
| | Velocity pressure | According to Standard | | : | EN 1991-1-4 |
| | | National Annex | | : | Slovenia |
| | | Wind zone | | : | 1 |
| | | Terrain category | | : | Category II |
| | | Altitude | $H_s$ | : | 300.000 m |
| | | Structure height | h | : | 9.000 m |
| | | Fundamental wind velocity | $v_{b,0}$ | : | 20.0 m/s |
| | Roof geometry | Node | A | : | 1086 |
| | | | B | : | 273 |
| | | | C | : | 1127 |
| | | | D | : | 1144 |
| | Eaves type | ☉ Sharp-edges eaves area | | | |
| | Generate LC | ☒ LC w+ | | : | LC5 |
| | Set wind on side | ☉ A - B | | | |
| | Internal pressure | ☒ Consider only increasing loads | | | |
| | | Internal pressure coefficient | $C_{pi}$ | : | -0.3 |
| | Load distribution type | ☉ Constant | | | |
| | Remove influence from | Members parallel to member | | : | 65,94,181,474,476,490 |
| | Generate wind loads on members No. | | | : | 51,82,83,88,99, 101-103,105,138, 159-165,169-172,174, 184-187,339 |
| | Flat Roof Dimensions | h | | : | 9.000 m |
| | | b | | : | 4.480 m |
| | | d | | : | 31.720 m |
| | | e | | : | 4.480 m |
| | | A | | : | 142.119 $m^2$ |
| | | $\alpha$ | | : | 0.8 ° |
| | | $b_F$ | | : | 1.120 m |
| | | $d_F$ | | : | 0.448 m |
| | | $d_H$ | | : | 1.792 m |
| | | $d_I$ | | : | 29.480 m |

| Zone | External pressure coefficient $c_{pe,10}$ | External + internal pressure $w_e + w_i$ [kN/m²] |
|---|---|---|
| F | -1.800 | -1.03 |
| G | -1.200 | -0.69 |
| H | -0.700 | -0.40 |
| I | 0.200 | 0.29 |

| | | | | |
|---|---|---|---|---|
| Generated total loads | $\Sigma P_{Areas}$ | : | 32.807 | kN |
| | $\Sigma P$ | : | 32.807 | kN |
| Total moment to the origin | $\Sigma M_{Areas}$ | : | 362.126 | kNm |
| | $\Sigma M$ | : | 362.126 | kNm |
| Cells selected for generating | $\Sigma$ number of cells | : | 12 | |
| | $\Sigma$ cell area | : | 229.236 | $m^2$ |
| 2 | **From Area Loads via Plane** | | | |
| | Area load direction | Perpendicular to the plane | : | ☒ z |
| | Member load direction | Direction of generated member loads: | : | ☒ Local in x, y, z |
| | Area of load application | ☒ Fully closed plane | | |
| | Load distribution type: | ☒ Constant | | |

## 3.5 GENERATED LOADS

LC5: veter +

| No. | Load Description | | | | |
|---|---|---|---|---|---|
| | Area load magnitude | ☒ Constant | : | 0.40 | kN/m² |
| | Boundary of the area load plane | Corner nodes | : | 93,342,1142,1315; 84,93,1315,1311; 82,84,1311,1305; 82,1305,1303,79; 79,1303,1320,80; 94,1320,1323,95; 95,1323,1326,97; 97,1326,1329,100; 100,1329,1332,106 | |
| | | Note | : | Each row in the drop down list box denotes one plane | |
| | Remove influence from | Single members | : | 80,91,106,121,132,191, 203,205,206,207,217, 280,281,283,284,286, 287,289,290,296,297, 298,299,300,301,302, 303,304,306,310,311, 312,313,314,500 | |
| | | Members parallel to member | : | 507,508,511,512,513, 514,515,516 | |
| | Generating total loads in direction | $\Sigma P_{Areas}$ X | : | 8.479 | kN |
| | | Y | : | -18.965 | kN |
| | | Z | : | 391.484 | kN |
| | | $\Sigma P_{Members}$ X | : | 8.217 | kN |
| | | Y | : | -19.168 | kN |
| | | Z | : | 391.484 | kN |
| | Total moment to the origin | $\Sigma M_{Areas}$ X | : | -5573.130 | kNm |
| | | Y | : | 12957.500 | kNm |
| | | Z | : | 717.041 | kNm |
| | | $\Sigma M_{Members}$ X | : | -5574.760 | kNm |
| | | Y | : | 12959.500 | kNm |
| | | Z | : | 724.871 | kNm |
| | Cells selected for generating | Σ number of cells | : | 33 | |
| | | Σ cell area | : | 980.564 | m² |
| | Convert loads to members No. | | : | 7,8,16,18,22,24,25,27, 28,90,110,175,189,192, 194-197,208,220, 234-238,244,245,248, 249,252,254-258,262, 266-268,272-274,278, 291,292,305,307-309, 350,495,496,499 | |
| 3 | **From Area Loads via Plane** | | | | |
| | Area load direction | Perpendicular to the plane | : | ☒ z | |
| | Member load direction | Direction of generated member loads: | : | ☒ Local in x, y, z | |
| | Area of load application | ☒ Fully closed plane | | | |
| | Load distribution type: | ☒ Constant | | | |
| | Area load magnitude | ☒ Constant | : | 0.29 | kN/m² |
| | Boundary of the area load plane | Corner nodes | : | 106,94,80,104 | |
| | | Note | : | Each row in the drop down list box denotes one plane | |
| | Remove influence from | Single members | : | 189,192,197,496 | |
| | | Members parallel to member | : | 521,522 | |
| | Generating total loads in direction | $\Sigma P_{Areas}$ X | : | 0.000 | kN |
| | | Y | : | -1.406 | kN |
| | | Z | : | 22.977 | kN |
| | | $\Sigma P_{Members}$ X | : | 0.000 | kN |
| | | Y | : | -1.406 | kN |
| | | Z | : | 22.977 | kN |
| | Total moment to the origin | $\Sigma M_{Areas}$ X | : | -43.031 | kNm |
| | | Y | : | 365.993 | kNm |
| | | Z | : | 22.390 | kNm |
| | | $\Sigma M_{Members}$ X | : | -43.031 | kNm |
| | | Y | : | 365.993 | kNm |
| | | Z | : | 22.390 | kNm |
| | Cells selected for generating | Σ number of cells | : | 4 | |
| | | Σ cell area | : | 79.378 | m² |
| | Convert loads to members No. | | : | 80,90,91,106,110,121, 175,191,194,205,208, 217,220,258,262,268, 274,350,495,499,500 | |
| 4 | **From Area Loads via Plane** | | | | |
| | Area load direction | Perpendicular to the plane | : | ☒ z | |
| | Member load direction | Direction of generated member loads: | : | ☒ Local in x, y, z | |
| | Area of load application | ☒ Fully closed plane | | | |
| | Load distribution type: | ☒ Constant | | | |
| | Area load magnitude | ☒ Constant | : | 0.29 | kN/m² |

## 3.5 GENERATED LOADS

LC5: veter +

| No. | Load Description | | | | |
|---|---|---|---|---|---|
| | Boundary of the area load plane | Corner nodes | : | 1127,106,214 | |
| | | Note | : | Each row in the drop down list box denotes one plane | |
| | Generating total loads in direction | $\Sigma P_{Areas}$ | X | : 0.000 | kN |
| | | | Y | : 0.287 | kN |
| | | | Z | : 0.000 | kN |
| | | $\Sigma P_{Members}$ | X | : 0.000 | kN |
| | | | Y | : 0.287 | kN |
| | | | Z | : 0.000 | kN |
| | Total moment to the origin | $\Sigma M_{Areas}$ | X | : 2.266 | kNm |
| | | | Y | : 0.000 | kNm |
| | | | Z | : -0.174 | kNm |
| | | $\Sigma M_{Members}$ | X | : 2.266 | kNm |
| | | | Y | : 0.000 | kNm |
| | | | Z | : -0.174 | kNm |
| | Cells selected for generating | $\Sigma$ number of cells | | : 1 | |
| | | $\Sigma$ cell area | | : 0.990 | $m^2$ |
| | Convert loads to members No. | | | : 339,342 | |

## VETER +

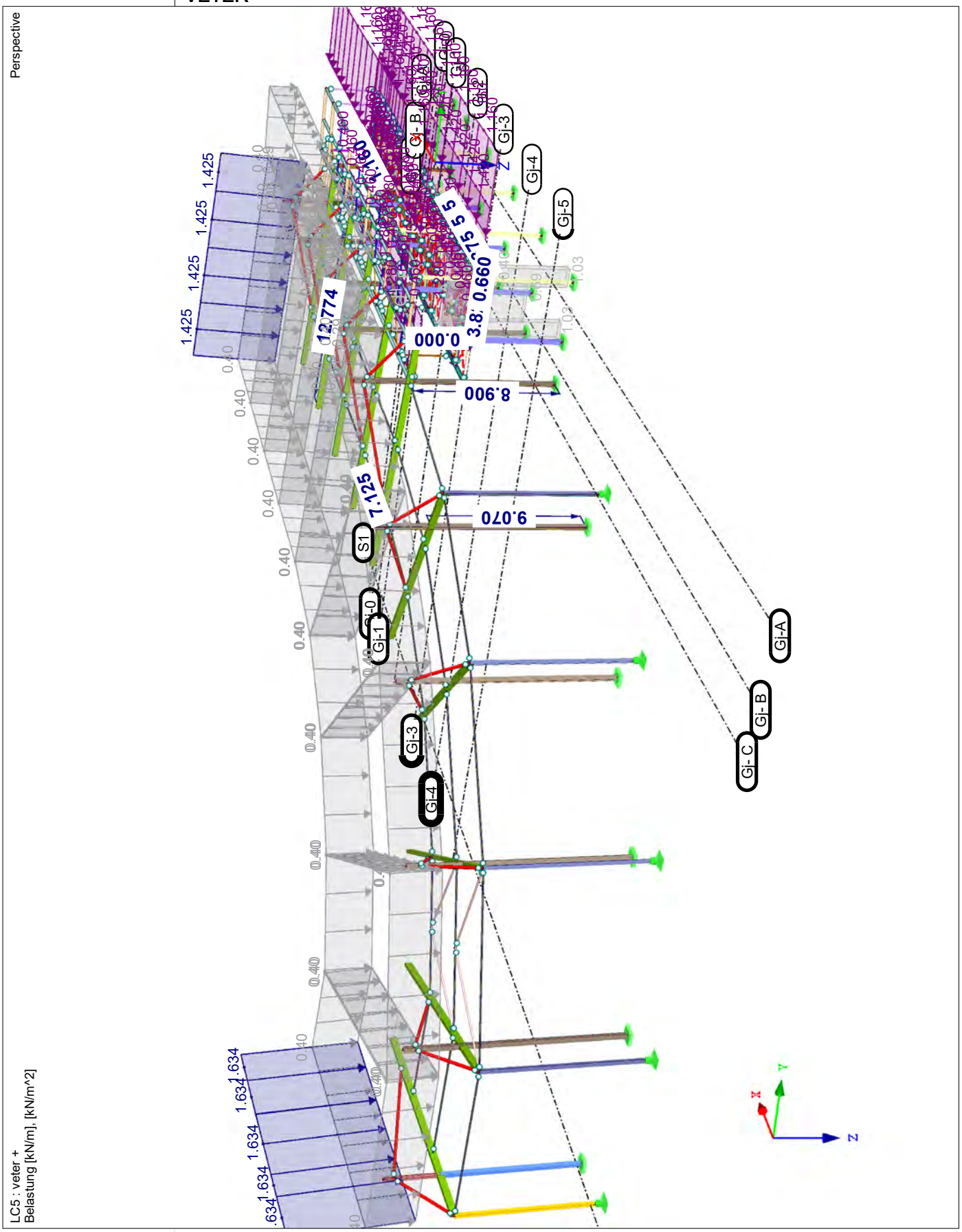
Perspective
LC5 : veter +
Belastung [kN/m], [kN/m^2]
1.425
1.634
0.40
12.774
7.125
9.070
8.900
0.000
3.8
0.660
S1
Gj-0
Gj-1
Gj-3
Gj-4
Gj-5
Gj-A
Gj- B
Gj- C
Z
Y
X

**LC6**
veter -

## 3.2 MEMBER LOADS

LC6: veter -

| No. | Reference to | On Members No. | Load Type | Load Distribution | Load Direction | Reference Length | Load Parameters Symbol | Value | Unit |
|---|---|---|---|---|---|---|---|---|---|
| 2 | Members | | Force | Uniform | Y | True Length | p | 1.160 | kN/m |
| | 37,38,43,44,49,50,72,104,109,113,117,142,145,148,151,158,204,210,212,216,221,222,229,230,232,319,320,338,494 | | | | | | | | |
| 3 | Members | | Force | Uniform | Y | True Length | p | 0.460 | kN/m |
| | 51,73,76-78,88,99,101-103,134,138,159,160,199,211,223-228,359,362 | | | | | | | | |
| 5 | Members | 52,97,107, 124,177, 460,493 | Force | Uniform | X | True Length | p | -1.280 | kN/m |
| 6 | Members | | Force | Uniform | Y | True Length | p | 1.420 | kN/m |
| | 35,36,41,42,47,48,141,144,147,150,155,156,214,315,316,336 | | | | | | | | |
| 7 | Members | 460 | Force | Uniform | X | True Length | p | -1.550 | kN/m |
| 8 | Members | 7,8,195, 196,252 | Force | Uniform | z | True Length | p | -1.634 | kN/m |
| 9 | Members | 27,175,291 | Force | Uniform | z | True Length | p | -3.135 | kN/m |
| 10 | Members | 292 | Force | Uniform | z | True Length | p | -3.135 | kN/m |

## 3.5 GENERATED LOADS

LC6: veter -

**No. 1 — From Wind Loads (Flat Roof)**

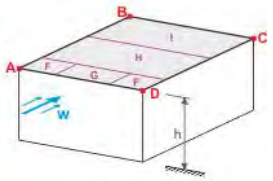


| | | | | | |
|---|---|---|---|---|---|
| Velocity pressure | According to Standard | | : | EN 1991-1-4 | |
| | National Annex | | : | Slovenia | |
| | Wind zone | | : | 1 | |
| | Terrain category | | : | Category II | |
| | Altitude | $H_s$ | : | 300.000 | m |
| | Structure height | h | : | 9.000 | m |
| | Fundamental wind velocity | $v_{b,0}$ | : | 20.0 | m/s |
| Roof geometry | Node | A | : | 1086 | |
| | | B | : | 273 | |
| | | C | : | 1127 | |
| | | D | : | 1144 | |
| Eaves type | ☉ Sharp-edges eaves area | | | | |
| Generate LC | ☒ LC w- | | : | LC6 | |
| Set wind on side | ☉ D - A | | | | |
| Internal pressure | ☒ Consider only increasing loads | | | | |
| | Internal pressure coefficient | $C_{pi}$ | : | 0.2 | |
| Load distribution type | ☉ Constant | | | | |
| Remove influence from | Members parallel to member | | : | 65,94,181,474,476,490 | |
| Generate wind loads on members No. | | | : | 51,82,83,88,99, 101-103,105,138, 159-165,169-172,174, 184-187,339 | |
| Flat Roof Dimensions | h | | : | 9.000 | m |
| | b | | : | 31.720 | m |
| | d | | : | 4.480 | m |
| | e | | : | 18.000 | m |
| | A | | : | 142.119 | $m^2$ |
| | $\alpha$ | | : | 0.8 | ° |
| | $b_F$ | | : | 4.500 | m |
| | $d_F$ | | : | 1.800 | m |
| | $d_H$ | | : | 7.200 | m |

| Zone | External pressure coefficient $c_{pe,10}$ | External + internal pressure $w_e + w_i$ [kN/m²] |
|---|---|---|
| F | -1.800 | -1.14 |
| G | -1.200 | -0.80 |
| H | -0.700 | -0.51 |
| I | -0.200 | -0.23 |

| | | | | | |
|---|---|---|---|---|---|
| Generated total loads | $\Sigma P_{Areas}$ | | : | 94.961 | kN |
| | $\Sigma P$ | | : | 94.961 | kN |
| Total moment to the origin | $\Sigma M_{Areas}$ | | : | 1382.640 | kNm |
| | $\Sigma M$ | | : | 1382.640 | kNm |
| Cells selected for generating | $\Sigma$ number of cells | | : | 14 | |
| | $\Sigma$ cell area | | : | 507.004 | $m^2$ |

**No. 2 — From Area Loads via Plane**

| | | | |
|---|---|---|---|
| Area load direction | Perpendicular to the plane | : | ☒ z |
| Member load direction | Direction of generated member loads: | : | ☒ Local in x, y, z |
| Area of load application | ☒ Fully closed plane | | |
| Load distribution type: | ☒ Constant | | |

## 3.5 GENERATED LOADS

LC6: veter -

| No. | Load Description | | | | |
|---|---|---|---|---|---|
| | Area load magnitude | ☒Constant | | : | -0.40 kN/m² |
| | Boundary of the area load plane | Corner nodes | | : | 93,342,1142,1315; 84,93,1315,1311; 82,84,1311,1305; 82,1305,1303,79; 79,1303,1320,80 |
| | | Note | | : | Each row in the drop down list box denotes one plane |
| | Remove influence from | Single members | | : | 206,207,296,297,298, 299,300,301,302,303, 304,306,310,311,312, 313,314 |
| | | Members parallel to member | | : | 513,514,515,516 |
| | Generating total loads in direction | $\Sigma P_{Areas}$ | X | : | -8.479 kN |
| | | | Y | : | 8.134 kN |
| | | | Z | : | -214.442 kN |
| | | $\Sigma P_{Members}$ | X | : | -8.217 kN |
| | | | Y | : | 8.337 kN |
| | | | Z | : | -214.442 kN |
| | Total moment to the origin | $\Sigma M_{Areas}$ | X | : | 4108.700 kNm |
| | | | Y | : | -10137.400 kNm |
| | | | Z | : | -544.518 kNm |
| | | $\Sigma M_{Members}$ | X | : | 4110.330 kNm |
| | | | Y | : | -10139.500 kNm |
| | | | Z | : | -552.354 kNm |
| | Cells selected for generating | Σ number of cells | | : | 5 |
| | | Σ cell area | | : | 537.132 m² |
| | Convert loads to members No. | | | : | 7,8,16,18,28,195,196, 234-238,244,245,248, 249,252,254,255,278, 305,307-309 |
| 3 | **From Area Loads via Plane** | | | | |
| | Area load direction | Perpendicular to the plane | | : | ☒z |
| | Member load direction | Direction of generated member loads: | | : | ☒Local in x, y, z |
| | Area of load application | ☒Fully closed plane | | | |
| | Load distribution type: | ☒Constant | | | |
| | Area load magnitude | ☒Constant | | : | -0.88 kN/m² |
| | Boundary of the area load plane | Corner nodes | | : | 94,1320,1323,95; 95,1323,1326,97; 97,1326,1329,100; 100,1329,1332,106 |
| | | Note | | : | Each row in the drop down list box denotes one plane |
| | Remove influence from | Single members | | : | 80,91,106,121,132,191, 203,205,217,280,281, 283,284,286,287,289, 290,500 |
| | | Members parallel to member | | : | 507,508,511,512 |
| | Generating total loads in direction | $\Sigma P_{Areas}$ | X | : | 0.000 kN |
| | | | Y | : | 23.828 kN |
| | | | Z | : | -389.492 kN |
| | | $\Sigma P_{Members}$ | X | : | 0.000 kN |
| | | | Y | : | 23.827 kN |
| | | | Z | : | -389.492 kN |
| | Total moment to the origin | $\Sigma M_{Areas}$ | X | : | 3221.750 kNm |
| | | | Y | : | -6204.170 kNm |
| | | | Z | : | -379.549 kNm |
| | | $\Sigma M_{Members}$ | X | : | 3221.740 kNm |
| | | | Y | : | -6204.170 kNm |
| | | | Z | : | -379.538 kNm |
| | Cells selected for generating | Σ number of cells | | : | 20 |
| | | Σ cell area | | : | 443.432 m² |
| | Convert loads to members No. | | | : | 22,24,25,27,90,110, 175,189,192,194,197, 208,220,254-258,262, 266-268,272-274,278, 291,292,350,495,496, 499 |
| 4 | **From Area Loads via Plane** | | | | |
| | Area load direction | Perpendicular to the plane | | : | ☒z |
| | Member load direction | Direction of generated member loads: | | : | ☒Local in x, y, z |
| | Area of load application | ☒Fully closed plane | | | |
| | Load distribution type: | ☒Constant | | | |
| | Area load magnitude | ☒Constant | | : | -0.51 kN/m² |
| | Boundary of the area load plane | Corner nodes | | : | 106,94,80,104 |
| | | Note | | : | Each row in the drop down list box denotes one plane |

## 3.5 GENERATED LOADS

LC6: veter -

| No. | Load Description | | | | |
|---|---|---|---|---|---|
| | Remove influence from | Single members | : | 189,192,197,496 | |
| | | Members parallel to member | : | 521,522 | |
| | Generating total loads in direction | $\Sigma$ P Areas | X | : 0.000 | kN |
| | | | Y | : 2.472 | kN |
| | | | Z | : -40.407 | kN |
| | | $\Sigma$P Members | X | : 0.000 | kN |
| | | | Y | : 2.472 | kN |
| | | | Z | : -40.407 | kN |
| | Total moment to the origin | $\Sigma$ M Areas | X | : 75.675 | kNm |
| | | | Y | : -643.642 | kNm |
| | | | Z | : -39.376 | kNm |
| | | $\Sigma$M Members | X | : 75.675 | kNm |
| | | | Y | : -643.643 | kNm |
| | | | Z | : -39.376 | kNm |
| | Cells selected for generating | $\Sigma$ number of cells | : | 4 | |
| | | $\Sigma$ cell area | : | 79.378 | m² |
| | Convert loads to members No. | | : | 80,90,91,106,110,121, 175,191,194,205,208, 217,220,258,262,268, 274,350,495,499,500 | |
| 5 | **From Area Loads via Plane** | | | | |
| | Area load direction | Perpendicular to the plane | : | ☒z | |
| | Member load direction | Direction of generated member loads: | : | ☒Local in x, y, z | |
| | Area of load application | ☒Fully closed plane | | | |
| | Load distribution type: | ☒Constant | | | |
| | Area load magnitude | ☒Constant | : | -0.51 | kN/m² |
| | Boundary of the area load plane | Corner nodes | : | 106,214,1127 | |
| | | Note | : | Each row in the drop down list box denotes one plane | |
| | Generating total loads in direction | $\Sigma$ P Areas | X | : 0.000 | kN |
| | | | Y | : -0.505 | kN |
| | | | Z | : 0.000 | kN |
| | | $\Sigma$P Members | X | : 0.000 | kN |
| | | | Y | : -0.505 | kN |
| | | | Z | : 0.000 | kN |
| | Total moment to the origin | $\Sigma$ M Areas | X | : -3.985 | kNm |
| | | | Y | : 0.000 | kNm |
| | | | Z | : 0.306 | kNm |
| | | $\Sigma$M Members | X | : -3.985 | kNm |
| | | | Y | : 0.000 | kNm |
| | | | Z | : 0.306 | kNm |
| | Cells selected for generating | $\Sigma$ number of cells | : | 1 | |
| | | $\Sigma$ cell area | : | 0.990 | m² |
| | Convert loads to members No. | | : | 339,342 | |

## VETER -

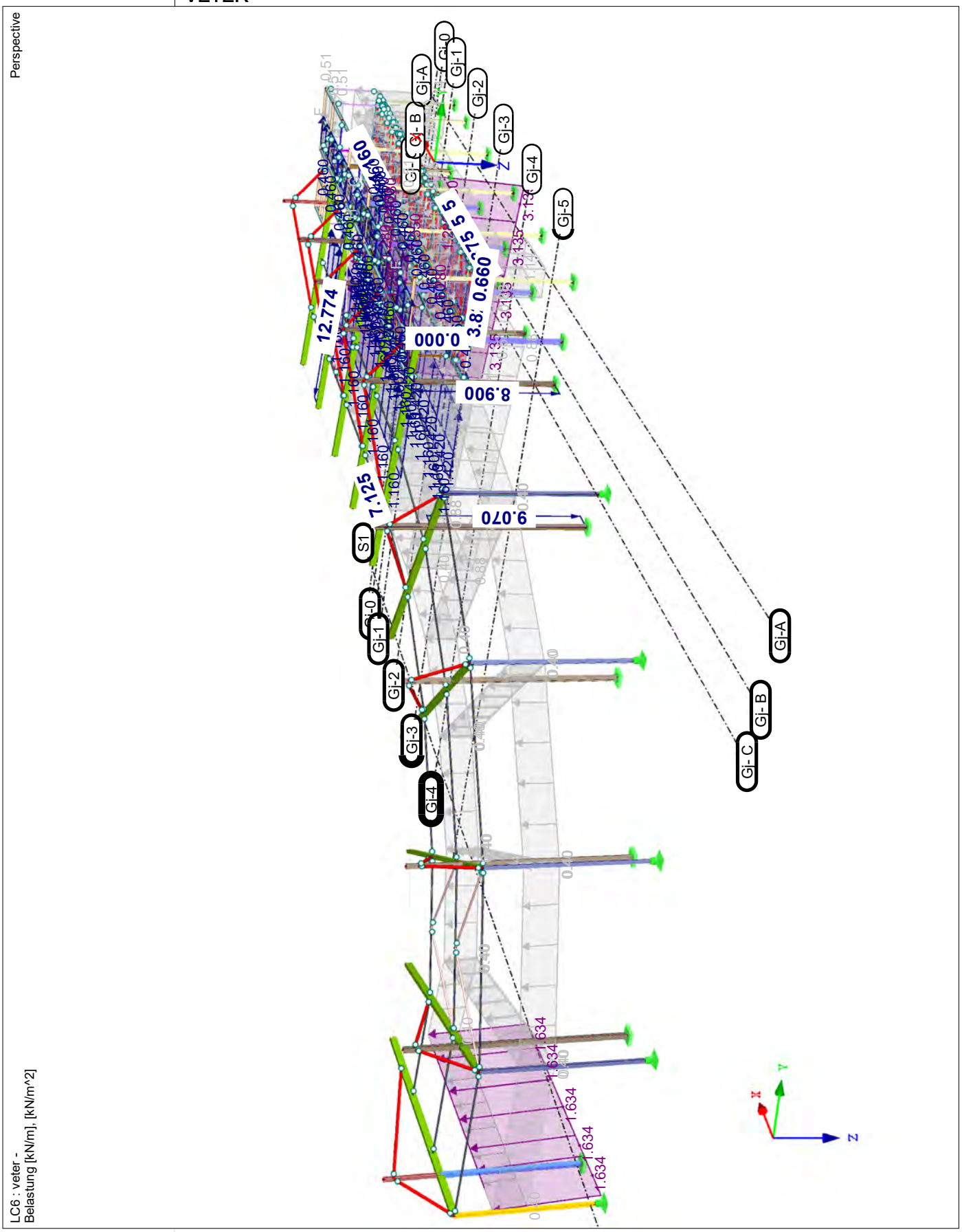
Perspective
LC6 : veter -
Belastung [kN/m], [kN/m^2]
12.774
0.000
8.900
9.070
7.125
S1
Gj-0
Gj-1
Gj-2
Gj-3
Gj-4
Gj-5
Gj-A
Gj-B
Gj-C
1.634

LC7
izboène sile +

## 3.2 MEMBER LOADS

LC7: izboène sile +

| No. | Reference to | On Members No. | Load Type | Load Distribution | Load Direction | Reference Length | Load Parameters Symbol | Value | Unit |
|---|---|---|---|---|---|---|---|---|---|
| 1 | Members | | Force | Uniform | y | True Length | p | 0.330 | kN/m |
| | 22,24,25,27,175,254-258,262,266-268,272-274,278,291,292 | | | | | | | | |
| 2 | Members | | Force | Uniform | y | True Length | p | 0.230 | kN/m |
| | 7,8,16,18,28,195,196,234-238,244,245,248,249,252,305,307-309 | | | | | | | | |

## IZBOCNE SILE +

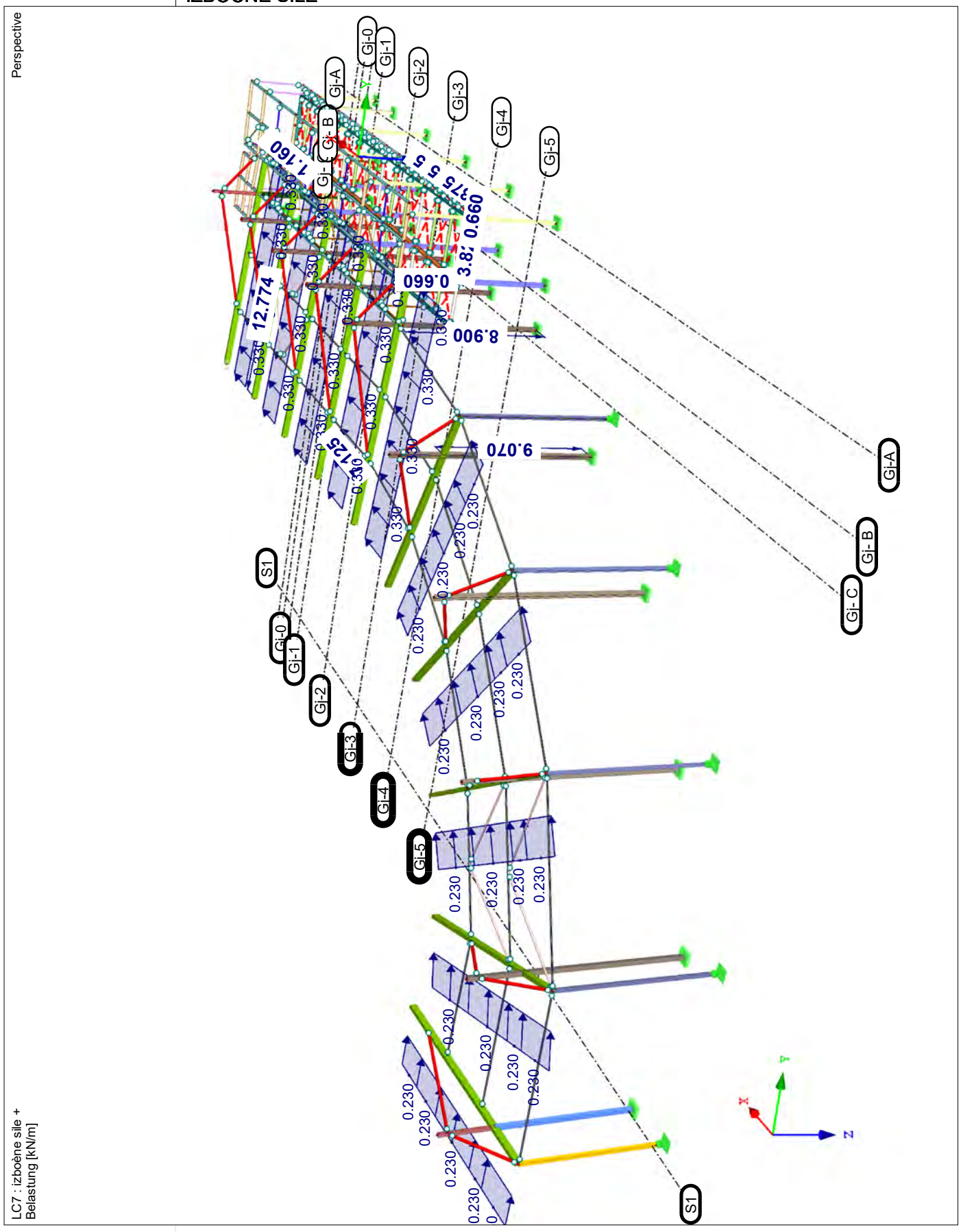

## IZBOCNE SILE -

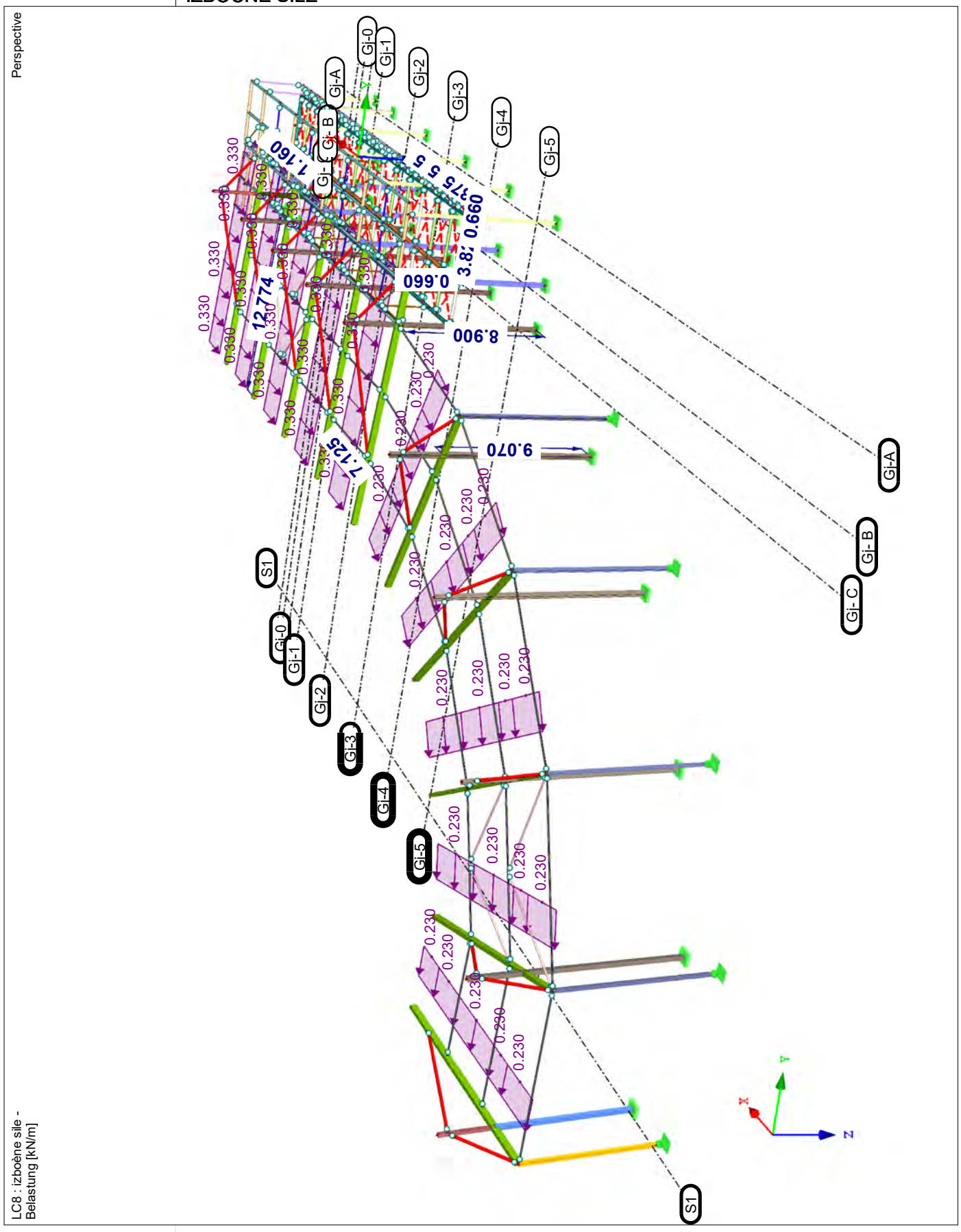

**LC8**
izboène sile -

## 3.2 MEMBER LOADS

LC8: izboène sile -

| No. | Reference to | On Members No. | Load Type | Load Distribution | Load Direction | Reference Length | Load Parameters Symbol | Value | Unit |
|---|---|---|---|---|---|---|---|---|---|
| 1 | Members | | Force | Uniform | y | True Length | p | -0.330 | kN/m |
| | 22,24,25,27,175,254-258,262,266-268,272-274,278,291,292 | | | | | | | | |
| 2 | Members | | Force | Uniform | y | True Length | p | -0.230 | kN/m |
| | 7,8,16,18,28,195,196,234-238,244,245,248,249,252,305,307-309 | | | | | | | | |

**LC9**
Ersatzlasten aus
Eigenform Nr. 1 - 0.85 Hz

## 3.1 NODAL LOADS - BY COMPONENTS - COORDINATE SYSTEM

LC9

| No. | On Nodes No. | Coordinate System | Force [kN] $P_X$ / $P_U$ | $P_Y$ / $P_V$ | $P_Z$ / $P_W$ | Moment [kNm] $M_X$ / $M_U$ | $M_Y$ / $M_V$ | $M_Z$ / $M_W$ |
|---|---|---|---|---|---|---|---|---|
| 1 | 30 | 0 \| Global XYZ | 0.339 | 0.265 | 0.002 | 0.000 | 0.000 | 0.000 |
| 2 | 31 | 0 \| Global XYZ | 0.529 | 0.467 | 0.016 | 0.000 | 0.000 | 0.000 |
| 3 | 32 | 0 \| Global XYZ | 0.063 | 0.003 | 0.000 | 0.000 | 0.000 | 0.000 |
| 4 | 33 | 0 \| Global XYZ | 0.714 | 0.761 | 0.080 | 0.000 | 0.000 | 0.000 |
| 5 | 34 | 0 \| Global XYZ | 0.197 | 0.001 | 0.000 | 0.000 | 0.000 | 0.000 |
| 6 | 35 | 0 \| Global XYZ | 0.197 | 0.067 | 0.000 | 0.000 | 0.000 | 0.000 |
| 7 | 36 | 0 \| Global XYZ | 0.197 | 0.137 | 0.001 | 0.000 | 0.000 | 0.000 |
| 8 | 37 | 0 \| Global XYZ | 0.075 | 0.086 | 0.006 | 0.000 | 0.000 | 0.000 |
| 9 | 38 | 0 \| Global XYZ | 0.047 | 0.130 | -0.001 | 0.000 | 0.000 | 0.000 |
| 10 | 39 | 0 \| Global XYZ | 0.042 | 0.126 | -0.001 | 0.000 | 0.000 | 0.000 |
| 11 | 40 | 0 \| Global XYZ | 0.131 | 0.140 | 0.009 | 0.000 | 0.000 | 0.000 |
| 12 | 41 | 0 \| Global XYZ | 0.295 | 0.161 | -0.001 | 0.000 | 0.000 | 0.000 |
| 13 | 42 | 0 \| Global XYZ | 0.294 | 0.043 | 0.000 | 0.000 | 0.000 | 0.000 |
| 14 | 43 | 0 \| Global XYZ | 0.293 | -0.039 | 0.000 | 0.000 | 0.000 | 0.000 |
| 15 | 44 | 0 \| Global XYZ | 0.152 | 0.139 | 0.003 | 0.000 | 0.000 | 0.000 |
| 16 | 45 | 0 \| Global XYZ | 0.608 | 0.605 | 0.062 | 0.000 | 0.000 | 0.000 |
| 17 | 46 | 0 \| Global XYZ | 0.025 | 1.518 | 0.001 | 0.000 | 0.000 | 0.000 |
| 18 | 47 | 0 \| Global XYZ | 0.820 | 1.473 | 0.001 | 0.000 | 0.000 | 0.000 |
| 19 | 48 | 0 \| Global XYZ | 0.240 | 1.783 | -0.003 | 0.000 | 0.000 | 0.000 |
| 20 | 49 | 0 \| Global XYZ | 0.792 | 1.217 | -0.002 | 0.000 | 0.000 | 0.000 |
| 21 | 50 | 0 \| Global XYZ | 0.887 | 1.014 | -0.002 | 0.000 | 0.000 | 0.000 |
| 22 | 51 | 0 \| Global XYZ | 0.101 | -0.054 | 0.000 | 0.000 | 0.000 | 0.000 |
| 23 | 52 | 0 \| Global XYZ | 0.886 | -0.371 | 0.001 | 0.000 | 0.000 | 0.000 |
| 24 | 53 | 0 \| Global XYZ | 0.414 | -0.147 | 0.001 | 0.000 | 0.000 | 0.000 |
| 25 | 54 | 0 \| Global XYZ | 0.533 | -0.185 | -0.005 | 0.000 | 0.000 | 0.000 |
| 26 | 55 | 0 \| Global XYZ | 0.338 | -0.105 | 0.002 | 0.000 | 0.000 | 0.000 |
| 27 | 56 | 0 \| Global XYZ | 0.059 | -0.010 | 0.000 | 0.000 | 0.000 | 0.000 |
| 28 | 57 | 0 \| Global XYZ | 0.558 | -0.093 | -0.003 | 0.000 | 0.000 | 0.000 |
| 29 | 58 | 0 \| Global XYZ | 1.365 | -0.154 | 0.001 | 0.000 | 0.000 | 0.000 |
| 30 | 59 | 0 \| Global XYZ | 0.414 | 0.002 | 0.002 | 0.000 | 0.000 | 0.000 |
| 31 | 60 | 0 \| Global XYZ | 0.531 | 0.003 | 0.000 | 0.000 | 0.000 | 0.000 |
| 32 | 61 | 0 \| Global XYZ | 0.338 | 0.002 | -0.003 | 0.000 | 0.000 | 0.000 |
| 33 | 63 | 0 \| Global XYZ | 0.059 | 0.011 | 0.000 | 0.000 | 0.000 | 0.000 |
| 34 | 64 | 0 \| Global XYZ | 0.086 | 0.096 | 0.028 | 0.000 | 0.000 | 0.000 |
| 35 | 65 | 0 \| Global XYZ | 0.555 | 0.104 | 0.002 | 0.000 | 0.000 | 0.000 |
| 36 | 66 | 0 \| Global XYZ | 1.365 | 0.264 | 0.000 | 0.000 | 0.000 | 0.000 |
| 37 | 68 | 0 \| Global XYZ | 0.414 | 0.183 | -0.008 | 0.000 | 0.000 | 0.000 |
| 38 | 74 | 0 \| Global XYZ | 0.031 | 0.025 | 0.000 | 0.000 | 0.000 | 0.000 |
| 39 | 78 | 0 \| Global XYZ | 0.927 | 0.726 | -0.017 | 0.000 | 0.000 | 0.000 |
| 40 | 79 | 0 \| Global XYZ | 0.460 | 0.620 | 0.003 | 0.000 | 0.000 | 0.000 |
| 41 | 80 | 0 \| Global XYZ | 0.962 | -0.401 | 0.001 | 0.000 | 0.000 | 0.000 |
| 42 | 81 | 0 \| Global XYZ | 0.029 | 0.034 | 0.000 | 0.000 | 0.000 | 0.000 |
| 43 | 82 | 0 \| Global XYZ | 0.415 | 0.717 | 0.002 | 0.000 | 0.000 | 0.000 |
| 44 | 83 | 0 \| Global XYZ | 0.015 | 0.052 | 0.000 | 0.000 | 0.000 | 0.000 |
| 45 | 84 | 0 \| Global XYZ | 0.085 | 1.087 | 0.004 | 0.000 | 0.000 | 0.000 |
| 46 | 85 | 0 \| Global XYZ | 0.535 | 0.571 | 0.027 | 0.000 | 0.000 | 0.000 |
| 47 | 86 | 0 \| Global XYZ | 1.120 | -0.147 | 0.001 | 0.000 | 0.000 | 0.000 |
| 48 | 87 | 0 \| Global XYZ | 0.414 | 0.372 | 0.028 | 0.000 | 0.000 | 0.000 |
| 49 | 89 | 0 \| Global XYZ | 1.359 | 0.679 | -0.004 | 0.000 | 0.000 | 0.000 |
| 50 | 92 | 0 \| Global XYZ | 0.023 | 0.048 | 0.000 | 0.000 | 0.000 | 0.000 |
| 51 | 93 | 0 \| Global XYZ | 0.507 | 0.863 | -0.001 | 0.000 | 0.000 | 0.000 |
| 52 | 94 | 0 \| Global XYZ | 0.350 | -0.167 | -0.001 | 0.000 | 0.000 | 0.000 |
| 53 | 95 | 0 \| Global XYZ | 0.678 | -0.102 | -0.001 | 0.000 | 0.000 | 0.000 |
| 54 | 96 | 0 \| Global XYZ | 1.142 | 0.163 | 0.000 | 0.000 | 0.000 | 0.000 |
| 55 | 97 | 0 \| Global XYZ | 0.679 | 0.113 | 0.000 | 0.000 | 0.000 | 0.000 |
| 56 | 98 | 0 \| Global XYZ | 1.180 | -0.119 | 0.010 | 0.000 | 0.000 | 0.000 |
| 57 | 99 | 0 \| Global XYZ | 1.144 | 0.619 | -0.004 | 0.000 | 0.000 | 0.000 |
| 58 | 100 | 0 \| Global XYZ | 0.677 | 0.424 | 0.003 | 0.000 | 0.000 | 0.000 |
| 59 | 101 | 0 \| Global XYZ | 1.292 | -0.413 | 0.020 | 0.000 | 0.000 | 0.000 |
| 60 | 102 | 0 \| Global XYZ | 1.180 | 0.130 | -0.004 | 0.000 | 0.000 | 0.000 |
| 61 | 103 | 0 \| Global XYZ | 0.069 | 0.019 | -0.001 | 0.000 | 0.000 | 0.000 |
| 62 | 104 | 0 \| Global XYZ | 1.168 | 0.993 | 0.002 | 0.000 | 0.000 | 0.000 |
| 63 | 105 | 0 \| Global XYZ | 1.178 | 0.498 | -0.028 | 0.000 | 0.000 | 0.000 |
| 64 | 106 | 0 \| Global XYZ | 0.617 | 0.607 | 0.009 | 0.000 | 0.000 | 0.000 |
| 65 | 107 | 0 \| Global XYZ | 1.354 | 0.895 | -0.055 | 0.000 | 0.000 | 0.000 |
| 66 | 108 | 0 \| Global XYZ | 0.085 | 0.019 | -0.002 | 0.000 | 0.000 | 0.000 |
| 67 | 109 | 0 \| Global XYZ | 0.059 | 0.041 | 0.000 | 0.000 | 0.000 | 0.000 |
| 68 | 110 | 0 \| Global XYZ | 0.554 | 0.380 | 0.006 | 0.000 | 0.000 | 0.000 |
| 69 | 111 | 0 \| Global XYZ | 0.063 | 0.022 | 0.000 | 0.000 | 0.000 | 0.000 |
| 70 | 112 | 0 \| Global XYZ | 0.063 | 0.041 | 0.000 | 0.000 | 0.000 | 0.000 |
| 71 | 113 | 0 \| Global XYZ | 0.340 | 0.131 | -0.001 | 0.000 | 0.000 | 0.000 |
| 72 | 114 | 0 \| Global XYZ | 0.529 | 0.231 | 0.003 | 0.000 | 0.000 | 0.000 |
| 73 | 214 | 0 \| Global XYZ | 0.374 | 0.354 | 0.005 | 0.000 | 0.000 | 0.000 |
| 74 | 270 | 0 \| Global XYZ | 0.382 | 0.232 | 0.001 | 0.000 | 0.000 | 0.000 |
| 75 | 271 | 0 \| Global XYZ | 0.381 | 0.063 | 0.000 | 0.000 | 0.000 | 0.000 |
| 76 | 272 | 0 \| Global XYZ | 0.380 | -0.057 | 0.000 | 0.000 | 0.000 | 0.000 |
| 77 | 273 | 0 \| Global XYZ | 0.269 | -0.126 | -0.001 | 0.000 | 0.000 | 0.000 |
| 78 | 274 | 0 \| Global XYZ | 1.494 | -0.711 | -0.005 | 0.000 | 0.000 | 0.000 |
| 79 | 275 | 0 \| Global XYZ | 0.128 | -0.078 | -0.010 | 0.000 | 0.000 | 0.000 |
| 80 | 276 | 0 \| Global XYZ | 2.507 | -0.322 | -0.002 | 0.000 | 0.000 | 0.000 |
| 81 | 277 | 0 \| Global XYZ | 0.240 | -0.039 | -0.006 | 0.000 | 0.000 | 0.000 |

## 3.1 NODAL LOADS - BY COMPONENTS - COORDINATE SYSTEM

LC9

| No. | On Nodes No. | Coordinate System | Force [kN] $P_X$ / $P_U$ | $P_Y$ / $P_V$ | $P_Z$ / $P_W$ | Moment [kNm] $M_X$ / $M_U$ | $M_Y$ / $M_V$ | $M_Z$ / $M_W$ |
|---|---|---|---|---|---|---|---|---|
| 82 | 278 | 0 \| Global XYZ | 2.506 | 0.552 | 0.000 | 0.000 | 0.000 | 0.000 |
| 83 | 279 | 0 \| Global XYZ | 0.016 | 0.011 | 0.000 | 0.000 | 0.000 | 0.000 |
| 84 | 281 | 0 \| Global XYZ | 0.240 | 0.068 | 0.006 | 0.000 | 0.000 | 0.000 |
| 85 | 282 | 0 \| Global XYZ | 2.499 | 1.420 | 0.009 | 0.000 | 0.000 | 0.000 |
| 86 | 283 | 0 \| Global XYZ | 0.240 | 0.174 | 0.024 | 0.000 | 0.000 | 0.000 |
| 87 | 284 | 0 \| Global XYZ | 0.751 | -0.439 | -0.001 | 0.000 | 0.000 | 0.000 |
| 88 | 285 | 0 \| Global XYZ | 1.313 | -0.207 | 0.000 | 0.000 | 0.000 | 0.000 |
| 89 | 286 | 0 \| Global XYZ | 1.313 | 0.356 | 0.000 | 0.000 | 0.000 | 0.000 |
| 90 | 287 | 0 \| Global XYZ | 1.312 | 0.915 | 0.000 | 0.000 | 0.000 | 0.000 |
| 91 | 289 | 0 \| Global XYZ | 0.169 | 0.191 | 0.031 | 0.000 | 0.000 | 0.000 |
| 92 | 290 | 0 \| Global XYZ | 1.011 | 1.096 | -0.001 | 0.000 | 0.000 | 0.000 |
| 93 | 291 | 0 \| Global XYZ | 0.010 | 0.011 | 0.000 | 0.000 | 0.000 | 0.000 |
| 94 | 292 | 0 \| Global XYZ | 0.033 | 0.038 | 0.006 | 0.000 | 0.000 | 0.000 |
| 95 | 302 | 0 \| Global XYZ | 0.024 | -0.008 | 0.000 | 0.000 | 0.000 | 0.000 |
| 96 | 303 | 0 \| Global XYZ | 0.023 | -0.003 | 0.000 | 0.000 | 0.000 | 0.000 |
| 97 | 304 | 0 \| Global XYZ | 0.024 | 0.003 | 0.000 | 0.000 | 0.000 | 0.000 |
| 98 | 305 | 0 \| Global XYZ | 0.024 | 0.011 | 0.000 | 0.000 | 0.000 | 0.000 |
| 99 | 342 | 0 \| Global XYZ | 0.018 | 0.842 | 0.000 | 0.000 | 0.000 | 0.000 |
| 100 | 974 | 0 \| Global XYZ | 0.548 | 0.713 | 0.002 | 0.000 | 0.000 | 0.000 |
| 101 | 975 | 0 \| Global XYZ | 1.827 | 1.623 | -0.032 | 0.000 | 0.000 | 0.000 |
| 102 | 1008 | 0 \| Global XYZ | 0.102 | 0.138 | 0.009 | 0.000 | 0.000 | 0.000 |
| 103 | 1011 | 0 \| Global XYZ | 0.218 | 0.172 | 0.001 | 0.000 | 0.000 | 0.000 |
| 104 | 1017 | 0 \| Global XYZ | 0.277 | 0.286 | 0.101 | 0.000 | 0.000 | 0.000 |
| 105 | 1082 | 0 \| Global XYZ | 0.412 | 0.449 | 0.043 | 0.000 | 0.000 | 0.000 |
| 106 | 1083 | 0 \| Global XYZ | 0.412 | 0.287 | -0.002 | 0.000 | 0.000 | 0.000 |
| 107 | 1084 | 0 \| Global XYZ | 0.412 | 0.079 | -0.001 | 0.000 | 0.000 | 0.000 |
| 108 | 1085 | 0 \| Global XYZ | 0.412 | -0.070 | 0.001 | 0.000 | 0.000 | 0.000 |
| 109 | 1086 | 0 \| Global XYZ | 0.220 | -0.118 | 0.001 | 0.000 | 0.000 | 0.000 |
| 110 | 1087 | 0 \| Global XYZ | 0.007 | 0.440 | 0.000 | 0.000 | 0.000 | 0.000 |
| 111 | 1125 | 0 \| Global XYZ | 0.032 | 1.575 | 0.000 | 0.000 | 0.000 | 0.000 |
| 112 | 1126 | 0 \| Global XYZ | 0.263 | 0.329 | 0.018 | 0.000 | 0.000 | 0.000 |
| 113 | 1127 | 0 \| Global XYZ | 0.170 | 0.189 | 0.013 | 0.000 | 0.000 | 0.000 |
| 114 | 1129 | 0 \| Global XYZ | 0.314 | 0.311 | 0.024 | 0.000 | 0.000 | 0.000 |
| 115 | 1130 | 0 \| Global XYZ | 0.168 | 0.177 | 0.027 | 0.000 | 0.000 | 0.000 |
| 116 | 1139 | 0 \| Global XYZ | 0.000 | 0.032 | 0.000 | 0.000 | 0.000 | 0.000 |
| 117 | 1142 | 0 \| Global XYZ | 0.010 | 0.656 | 0.000 | 0.000 | 0.000 | 0.000 |
| 118 | 1144 | 0 \| Global XYZ | 0.208 | 0.265 | 0.011 | 0.000 | 0.000 | 0.000 |
| 119 | 1290 | 0 \| Global XYZ | 0.027 | 1.387 | 0.000 | 0.000 | 0.000 | 0.000 |
| 120 | 1291 | 0 \| Global XYZ | 0.033 | 1.862 | 0.001 | 0.000 | 0.000 | 0.000 |
| 121 | 1303 | 0 \| Global XYZ | 0.791 | 0.595 | -0.014 | 0.000 | 0.000 | 0.000 |
| 122 | 1305 | 0 \| Global XYZ | 0.698 | 0.805 | -0.010 | 0.000 | 0.000 | 0.000 |
| 123 | 1306 | 0 \| Global XYZ | 1.405 | 1.262 | -0.031 | 0.000 | 0.000 | 0.000 |
| 124 | 1307 | 0 \| Global XYZ | 0.290 | 0.252 | -0.001 | 0.000 | 0.000 | 0.000 |
| 125 | 1308 | 0 \| Global XYZ | 1.240 | 1.611 | -0.023 | 0.000 | 0.000 | 0.000 |
| 126 | 1309 | 0 \| Global XYZ | 0.269 | 0.335 | 0.000 | 0.000 | 0.000 | 0.000 |
| 127 | 1311 | 0 \| Global XYZ | 0.354 | 1.163 | -0.016 | 0.000 | 0.000 | 0.000 |
| 128 | 1312 | 0 \| Global XYZ | 0.520 | 2.305 | -0.036 | 0.000 | 0.000 | 0.000 |
| 129 | 1313 | 0 \| Global XYZ | 0.134 | 0.500 | -0.001 | 0.000 | 0.000 | 0.000 |
| 130 | 1315 | 0 \| Global XYZ | 0.511 | 1.079 | 0.005 | 0.000 | 0.000 | 0.000 |
| 131 | 1316 | 0 \| Global XYZ | 1.033 | 2.024 | 0.012 | 0.000 | 0.000 | 0.000 |
| 132 | 1317 | 0 \| Global XYZ | 0.225 | 0.462 | 0.000 | 0.000 | 0.000 | 0.000 |
| 133 | 1320 | 0 \| Global XYZ | 0.896 | -0.179 | 0.020 | 0.000 | 0.000 | 0.000 |
| 134 | 1321 | 0 \| Global XYZ | 1.650 | -0.423 | 0.035 | 0.000 | 0.000 | 0.000 |
| 135 | 1322 | 0 \| Global XYZ | 0.268 | -0.095 | 0.000 | 0.000 | 0.000 | 0.000 |
| 136 | 1323 | 0 \| Global XYZ | 0.881 | -0.056 | 0.011 | 0.000 | 0.000 | 0.000 |
| 137 | 1324 | 0 \| Global XYZ | 1.588 | -0.130 | 0.018 | 0.000 | 0.000 | 0.000 |
| 138 | 1325 | 0 \| Global XYZ | 0.262 | -0.030 | 0.000 | 0.000 | 0.000 | 0.000 |
| 139 | 1326 | 0 \| Global XYZ | 0.863 | 0.062 | -0.013 | 0.000 | 0.000 | 0.000 |
| 140 | 1327 | 0 \| Global XYZ | 1.547 | 0.140 | -0.017 | 0.000 | 0.000 | 0.000 |
| 141 | 1328 | 0 \| Global XYZ | 0.268 | 0.033 | 0.000 | 0.000 | 0.000 | 0.000 |
| 142 | 1329 | 0 \| Global XYZ | 0.857 | 0.234 | -0.021 | 0.000 | 0.000 | 0.000 |
| 143 | 1330 | 0 \| Global XYZ | 1.539 | 0.532 | -0.040 | 0.000 | 0.000 | 0.000 |
| 144 | 1331 | 0 \| Global XYZ | 0.270 | 0.124 | -0.001 | 0.000 | 0.000 | 0.000 |
| 145 | 1332 | 0 \| Global XYZ | 1.042 | 0.434 | -0.025 | 0.000 | 0.000 | 0.000 |
| 146 | 1333 | 0 \| Global XYZ | 1.783 | 0.960 | -0.061 | 0.000 | 0.000 | 0.000 |
| 147 | 1335 | 0 \| Global XYZ | 0.225 | 0.161 | 0.000 | 0.000 | 0.000 | 0.000 |
| 148 | 1336 | 0 \| Global XYZ | 0.770 | 0.822 | -0.013 | 0.000 | 0.000 | 0.000 |
| 149 | 1337 | 0 \| Global XYZ | 0.685 | 1.003 | -0.010 | 0.000 | 0.000 | 0.000 |
| 150 | 1338 | 0 \| Global XYZ | 0.233 | 1.467 | -0.017 | 0.000 | 0.000 | 0.000 |
| 151 | 1339 | 0 \| Global XYZ | 0.667 | 1.227 | 0.006 | 0.000 | 0.000 | 0.000 |
| 152 | 1340 | 0 \| Global XYZ | 2.329 | -0.839 | 0.199 | 0.000 | 0.000 | 0.000 |
| 153 | 1341 | 0 \| Global XYZ | 2.329 | -0.569 | -0.043 | 0.000 | 0.000 | 0.000 |
| 154 | 1342 | 0 \| Global XYZ | 1.243 | -0.373 | 0.007 | 0.000 | 0.000 | 0.000 |
| 155 | 1343 | 0 \| Global XYZ | 2.330 | -0.028 | 0.089 | 0.000 | 0.000 | 0.000 |
| 156 | 1344 | 0 \| Global XYZ | 1.243 | -0.550 | 0.092 | 0.000 | 0.000 | 0.000 |
| 157 | 1345 | 0 \| Global XYZ | 1.138 | -0.361 | 0.103 | 0.000 | 0.000 | 0.000 |
| 158 | 1346 | 0 \| Global XYZ | 1.139 | -0.245 | -0.054 | 0.000 | 0.000 | 0.000 |
| 159 | 1347 | 0 \| Global XYZ | 2.330 | 0.242 | -0.107 | 0.000 | 0.000 | 0.000 |
| 160 | 1348 | 0 \| Global XYZ | 1.243 | 0.159 | -0.041 | 0.000 | 0.000 | 0.000 |
| 161 | 1349 | 0 \| Global XYZ | 1.243 | -0.019 | 0.020 | 0.000 | 0.000 | 0.000 |
| 162 | 1350 | 0 \| Global XYZ | 1.139 | -0.012 | 0.068 | 0.000 | 0.000 | 0.000 |
| 163 | 1351 | 0 \| Global XYZ | 1.139 | 0.104 | -0.073 | 0.000 | 0.000 | 0.000 |
| 164 | 1352 | 0 \| Global XYZ | 2.328 | 0.783 | 0.111 | 0.000 | 0.000 | 0.000 |
| 165 | 1353 | 0 \| Global XYZ | 2.326 | 1.052 | -0.080 | 0.000 | 0.000 | 0.000 |
| 166 | 1354 | 0 \| Global XYZ | 1.242 | 0.690 | -0.023 | 0.000 | 0.000 | 0.000 |
| 167 | 1355 | 0 \| Global XYZ | 1.242 | 0.514 | 0.039 | 0.000 | 0.000 | 0.000 |
| 168 | 1356 | 0 \| Global XYZ | 1.138 | 0.336 | 0.068 | 0.000 | 0.000 | 0.000 |
| 169 | 1357 | 0 \| Global XYZ | 1.136 | 0.452 | -0.075 | 0.000 | 0.000 | 0.000 |
| 170 | 1358 | 0 \| Global XYZ | 2.319 | 1.585 | 0.064 | 0.000 | 0.000 | 0.000 |
| 171 | 1359 | 0 \| Global XYZ | 2.062 | 1.647 | -0.127 | 0.000 | 0.000 | 0.000 |
| 172 | 1360 | 0 \| Global XYZ | 1.106 | 1.081 | -0.053 | 0.000 | 0.000 | 0.000 |
| 173 | 1361 | 0 \| Global XYZ | 1.242 | 1.041 | 0.007 | 0.000 | 0.000 | 0.000 |

## 3.1 NODAL LOADS - BY COMPONENTS - COORDINATE SYSTEM

LC9

| No. | On Nodes No. | Coordinate System | Force [kN] $P_X$ / $P_U$ | $P_Y$ / $P_V$ | $P_Z$ / $P_W$ | Moment [kNm] $M_X$ / $M_U$ | $M_Y$ / $M_V$ | $M_Z$ / $M_W$ |
|---|---|---|---|---|---|---|---|---|
| 174 | 1362 | 0 \| Global XYZ | 1.131 | 0.680 | 0.072 | 0.000 | 0.000 | 0.000 |
| 175 | 1363 | 0 \| Global XYZ | 1.002 | 0.705 | -0.048 | 0.000 | 0.000 | 0.000 |
| 176 | 1364 | 0 \| Global XYZ | 0.979 | 1.168 | 0.019 | 0.000 | 0.000 | 0.000 |
| 177 | 1365 | 0 \| Global XYZ | 1.804 | 1.764 | 0.200 | 0.000 | 0.000 | 0.000 |
| 178 | 1366 | 0 \| Global XYZ | 0.240 | -0.111 | -0.015 | 0.000 | 0.000 | 0.000 |
| 179 | 1367 | 0 \| Global XYZ | 0.862 | 0.744 | 0.061 | 0.000 | 0.000 | 0.000 |
| 180 | 1371 | 0 \| Global XYZ | 0.237 | 0.232 | 0.001 | 0.000 | 0.000 | 0.000 |
| 181 | 1372 | 0 \| Global XYZ | 0.081 | 0.081 | 0.003 | 0.000 | 0.000 | 0.000 |
| 182 | 1379 | 0 \| Global XYZ | 0.515 | -0.142 | 0.008 | 0.000 | 0.000 | 0.000 |
| 183 | 1396 | 0 \| Global XYZ | 0.240 | -0.075 | -0.011 | 0.000 | 0.000 | 0.000 |
| 184 | 1397 | 0 \| Global XYZ | 0.450 | 0.424 | 0.001 | 0.000 | 0.000 | 0.000 |
| 185 | 1398 | 0 \| Global XYZ | 0.240 | -0.004 | -0.001 | 0.000 | 0.000 | 0.000 |
| 186 | 1399 | 0 \| Global XYZ | 0.240 | 0.032 | 0.003 | 0.000 | 0.000 | 0.000 |
| 187 | 1400 | 0 \| Global XYZ | 0.240 | 0.103 | 0.010 | 0.000 | 0.000 | 0.000 |
| 188 | 1401 | 0 \| Global XYZ | 0.240 | 0.139 | 0.015 | 0.000 | 0.000 | 0.000 |
| 189 | 1402 | 0 \| Global XYZ | 0.240 | 0.209 | 0.038 | 0.000 | 0.000 | 0.000 |
| 190 | 1403 | 0 \| Global XYZ | 0.214 | 0.217 | 0.042 | 0.000 | 0.000 | 0.000 |
| 191 | 1404 | 0 \| Global XYZ | 0.182 | 0.226 | 0.026 | 0.000 | 0.000 | 0.000 |
| 192 | 1405 | 0 \| Global XYZ | 0.364 | -0.191 | -0.004 | 0.000 | 0.000 | 0.000 |
| 193 | 1410 | 0 \| Global XYZ | 0.154 | -0.074 | 0.000 | 0.000 | 0.000 | 0.000 |
| 194 | 1411 | 0 \| Global XYZ | 0.272 | -0.115 | 0.000 | 0.000 | 0.000 | 0.000 |
| 195 | 1412 | 0 \| Global XYZ | 0.196 | 0.168 | 0.000 | 0.000 | 0.000 | 0.000 |
| 196 | 1413 | 0 \| Global XYZ | 0.196 | -0.054 | 0.003 | 0.000 | 0.000 | 0.000 |
| 197 | 1414 | 0 \| Global XYZ | 0.063 | -0.017 | 0.001 | 0.000 | 0.000 | 0.000 |
| 198 | 1415 | 0 \| Global XYZ | 0.473 | -0.148 | 0.000 | 0.000 | 0.000 | 0.000 |
| 199 | 1416 | 0 \| Global XYZ | 0.472 | 0.003 | -0.003 | 0.000 | 0.000 | 0.000 |
| 200 | 1417 | 0 \| Global XYZ | 0.517 | 0.003 | -0.001 | 0.000 | 0.000 | 0.000 |
| 201 | 1418 | 0 \| Global XYZ | 0.471 | 0.186 | -0.002 | 0.000 | 0.000 | 0.000 |
| 202 | 1419 | 0 \| Global XYZ | 0.528 | 0.180 | -0.001 | 0.000 | 0.000 | 0.000 |
| 203 | 1420 | 0 \| Global XYZ | 0.471 | 0.376 | 0.051 | 0.000 | 0.000 | 0.000 |
| 204 | 1421 | 0 \| Global XYZ | 0.519 | 0.362 | 0.002 | 0.000 | 0.000 | 0.000 |
| 205 | 1422 | 0 \| Global XYZ | 0.082 | 0.086 | 0.039 | 0.000 | 0.000 | 0.000 |
| 206 | 1424 | 0 \| Global XYZ | 0.310 | 0.288 | 0.015 | 0.000 | 0.000 | 0.000 |
| 207 | 1425 | 0 \| Global XYZ | 0.189 | 0.178 | 0.002 | 0.000 | 0.000 | 0.000 |
| 208 | 1426 | 0 \| Global XYZ | 0.199 | 0.214 | 0.006 | 0.000 | 0.000 | 0.000 |
| 209 | 1427 | 0 \| Global XYZ | 0.117 | 0.117 | 0.000 | 0.000 | 0.000 | 0.000 |
| 210 | 1428 | 0 \| Global XYZ | 0.114 | 0.100 | 0.000 | 0.000 | 0.000 | 0.000 |
| 211 | 1431 | 0 \| Global XYZ | 0.051 | 0.045 | 0.003 | 0.000 | 0.000 | 0.000 |
| 212 | 1432 | 0 \| Global XYZ | 0.052 | 0.046 | 0.000 | 0.000 | 0.000 | 0.000 |

## 3.1 NODAL LOADS - BY COMPONENTS - COORDINATE SYSTEM

LC10

**LC10**
Ersatzlasten aus
Eigenform Nr. 2 - 0.95 Hz

| No. | On Nodes No. | Coordinate System | Force [kN] $P_X$ / $P_U$ | $P_Y$ / $P_V$ | $P_Z$ / $P_W$ | Moment [kNm] $M_X$ / $M_U$ | $M_Y$ / $M_V$ | $M_Z$ / $M_W$ |
|---|---|---|---|---|---|---|---|---|
| 1 | 30 | 0 \| Global XYZ | 0.285 | -0.655 | -0.004 | 0.000 | 0.000 | 0.000 |
| 2 | 31 | 0 \| Global XYZ | 0.626 | -1.155 | -0.044 | 0.000 | 0.000 | 0.000 |
| 3 | 32 | 0 \| Global XYZ | 0.037 | -0.035 | 0.000 | 0.000 | 0.000 | 0.000 |
| 4 | 33 | 0 \| Global XYZ | 0.662 | -1.891 | 0.100 | 0.000 | 0.000 | 0.000 |
| 5 | 34 | 0 \| Global XYZ | 0.100 | -0.107 | 0.000 | 0.000 | 0.000 | 0.000 |
| 6 | 35 | 0 \| Global XYZ | 0.100 | -0.223 | 0.001 | 0.000 | 0.000 | 0.000 |
| 7 | 36 | 0 \| Global XYZ | 0.100 | -0.340 | 0.000 | 0.000 | 0.000 | 0.000 |
| 8 | 37 | 0 \| Global XYZ | 0.063 | -0.200 | 0.007 | 0.000 | 0.000 | 0.000 |
| 9 | 38 | 0 \| Global XYZ | -0.006 | -0.012 | 0.000 | 0.000 | 0.000 | 0.000 |
| 10 | 39 | 0 \| Global XYZ | 0.004 | 0.007 | 0.000 | 0.000 | 0.000 | 0.000 |
| 11 | 40 | 0 \| Global XYZ | 0.085 | -0.327 | 0.004 | 0.000 | 0.000 | 0.000 |
| 12 | 41 | 0 \| Global XYZ | 0.149 | -0.424 | 0.002 | 0.000 | 0.000 | 0.000 |
| 13 | 42 | 0 \| Global XYZ | 0.150 | -0.248 | 0.001 | 0.000 | 0.000 | 0.000 |
| 14 | 43 | 0 \| Global XYZ | 0.150 | -0.075 | 0.000 | 0.000 | 0.000 | 0.000 |
| 15 | 44 | 0 \| Global XYZ | 0.140 | -0.353 | 0.000 | 0.000 | 0.000 | 0.000 |
| 16 | 45 | 0 \| Global XYZ | 0.469 | -1.502 | 0.027 | 0.000 | 0.000 | 0.000 |
| 17 | 46 | 0 \| Global XYZ | -0.001 | -0.182 | 0.000 | 0.000 | 0.000 | 0.000 |
| 18 | 47 | 0 \| Global XYZ | -0.216 | 0.358 | -0.001 | 0.000 | 0.000 | 0.000 |
| 19 | 48 | 0 \| Global XYZ | 0.430 | 0.028 | 0.001 | 0.000 | 0.000 | 0.000 |
| 20 | 49 | 0 \| Global XYZ | 0.243 | 0.218 | 0.000 | 0.000 | 0.000 | 0.000 |
| 21 | 50 | 0 \| Global XYZ | 0.281 | 0.143 | 0.000 | 0.000 | 0.000 | 0.000 |
| 22 | 51 | 0 \| Global XYZ | 0.158 | 0.043 | 0.000 | 0.000 | 0.000 | 0.000 |
| 23 | 52 | 0 \| Global XYZ | 0.514 | 0.295 | -0.002 | 0.000 | 0.000 | 0.000 |
| 24 | 53 | 0 \| Global XYZ | 0.721 | 0.020 | 0.001 | 0.000 | 0.000 | 0.000 |
| 25 | 54 | 0 \| Global XYZ | 0.625 | 0.025 | 0.001 | 0.000 | 0.000 | 0.000 |
| 26 | 55 | 0 \| Global XYZ | 0.284 | 0.014 | 0.001 | 0.000 | 0.000 | 0.000 |
| 27 | 56 | 0 \| Global XYZ | 0.094 | -0.019 | 0.000 | 0.000 | 0.000 | 0.000 |
| 28 | 57 | 0 \| Global XYZ | 0.655 | -0.178 | -0.003 | 0.000 | 0.000 | 0.000 |
| 29 | 58 | 0 \| Global XYZ | 0.792 | -0.355 | 0.001 | 0.000 | 0.000 | 0.000 |
| 30 | 59 | 0 \| Global XYZ | 0.721 | -0.291 | -0.002 | 0.000 | 0.000 | 0.000 |
| 31 | 60 | 0 \| Global XYZ | 0.625 | -0.367 | -0.008 | 0.000 | 0.000 | 0.000 |
| 32 | 61 | 0 \| Global XYZ | 0.284 | -0.208 | -0.001 | 0.000 | 0.000 | 0.000 |
| 33 | 63 | 0 \| Global XYZ | 0.094 | -0.064 | 0.000 | 0.000 | 0.000 | 0.000 |
| 34 | 64 | 0 \| Global XYZ | 0.056 | -0.224 | -0.052 | 0.000 | 0.000 | 0.000 |
| 35 | 65 | 0 \| Global XYZ | 0.656 | -0.588 | -0.011 | 0.000 | 0.000 | 0.000 |
| 36 | 66 | 0 \| Global XYZ | 0.791 | -1.164 | 0.005 | 0.000 | 0.000 | 0.000 |
| 37 | 68 | 0 \| Global XYZ | 0.721 | -0.605 | 0.021 | 0.000 | 0.000 | 0.000 |
| 38 | 74 | 0 \| Global XYZ | 0.009 | 0.004 | 0.000 | 0.000 | 0.000 | 0.000 |
| 39 | 78 | 0 \| Global XYZ | 0.540 | -1.872 | -0.007 | 0.000 | 0.000 | 0.000 |
| 40 | 79 | 0 \| Global XYZ | 0.312 | 0.135 | 0.000 | 0.000 | 0.000 | 0.000 |
| 41 | 80 | 0 \| Global XYZ | 0.491 | 0.316 | -0.002 | 0.000 | 0.000 | 0.000 |
| 42 | 81 | 0 \| Global XYZ | 0.008 | 0.007 | 0.000 | 0.000 | 0.000 | 0.000 |
| 43 | 82 | 0 \| Global XYZ | 0.268 | 0.221 | 0.000 | 0.000 | 0.000 | 0.000 |
| 44 | 83 | 0 \| Global XYZ | 0.011 | 0.003 | 0.000 | 0.000 | 0.000 | 0.000 |

## 3.1 NODAL LOADS - BY COMPONENTS - COORDINATE SYSTEM

LC10

| No. | On Nodes No. | Coordinate System | Force [kN] $P_X$ / $P_U$ | $P_Y$ / $P_V$ | $P_Z$ / $P_W$ | Moment [kNm] $M_X$ / $M_U$ | $M_Y$ / $M_V$ | $M_Z$ / $M_W$ |
|---|---|---|---|---|---|---|---|---|
| 45 | 84 | 0 \| Global XYZ | 0.370 | 0.132 | -0.001 | 0.000 | 0.000 | 0.000 |
| 46 | 85 | 0 \| Global XYZ | 0.632 | -1.354 | -0.052 | 0.000 | 0.000 | 0.000 |
| 47 | 86 | 0 \| Global XYZ | 0.571 | -0.285 | 0.001 | 0.000 | 0.000 | 0.000 |
| 48 | 87 | 0 \| Global XYZ | 0.721 | -0.918 | -0.070 | 0.000 | 0.000 | 0.000 |
| 49 | 89 | 0 \| Global XYZ | 0.789 | -1.974 | 0.008 | 0.000 | 0.000 | 0.000 |
| 50 | 92 | 0 \| Global XYZ | -0.004 | 0.011 | 0.000 | 0.000 | 0.000 | 0.000 |
| 51 | 93 | 0 \| Global XYZ | -0.100 | 0.371 | 0.001 | 0.000 | 0.000 | 0.000 |
| 52 | 94 | 0 \| Global XYZ | 0.296 | 0.132 | 0.000 | 0.000 | 0.000 | 0.000 |
| 53 | 95 | 0 \| Global XYZ | 0.573 | -0.197 | -0.001 | 0.000 | 0.000 | 0.000 |
| 54 | 96 | 0 \| Global XYZ | 0.577 | -0.950 | 0.004 | 0.000 | 0.000 | 0.000 |
| 55 | 97 | 0 \| Global XYZ | 0.575 | -0.652 | -0.003 | 0.000 | 0.000 | 0.000 |
| 56 | 98 | 0 \| Global XYZ | 0.140 | -0.231 | 0.011 | 0.000 | 0.000 | 0.000 |
| 57 | 99 | 0 \| Global XYZ | 0.575 | -1.623 | 0.008 | 0.000 | 0.000 | 0.000 |
| 58 | 100 | 0 \| Global XYZ | 0.575 | -1.115 | -0.005 | 0.000 | 0.000 | 0.000 |
| 59 | 101 | 0 \| Global XYZ | 0.154 | 0.325 | -0.016 | 0.000 | 0.000 | 0.000 |
| 60 | 102 | 0 \| Global XYZ | 0.139 | -0.762 | 0.038 | 0.000 | 0.000 | 0.000 |
| 61 | 103 | 0 \| Global XYZ | 0.008 | -0.061 | 0.004 | 0.000 | 0.000 | 0.000 |
| 62 | 104 | 0 \| Global XYZ | 0.589 | -2.357 | 0.011 | 0.000 | 0.000 | 0.000 |
| 63 | 105 | 0 \| Global XYZ | 0.138 | -1.302 | 0.066 | 0.000 | 0.000 | 0.000 |
| 64 | 106 | 0 \| Global XYZ | 0.522 | -1.440 | -0.002 | 0.000 | 0.000 | 0.000 |
| 65 | 107 | 0 \| Global XYZ | 0.160 | -2.123 | 0.115 | 0.000 | 0.000 | 0.000 |
| 66 | 108 | 0 \| Global XYZ | -0.011 | -0.061 | 0.006 | 0.000 | 0.000 | 0.000 |
| 67 | 109 | 0 \| Global XYZ | 0.094 | -0.110 | 0.000 | 0.000 | 0.000 | 0.000 |
| 68 | 110 | 0 \| Global XYZ | 0.656 | -1.004 | -0.017 | 0.000 | 0.000 | 0.000 |
| 69 | 111 | 0 \| Global XYZ | 0.037 | -0.073 | 0.000 | 0.000 | 0.000 | 0.000 |
| 70 | 112 | 0 \| Global XYZ | 0.036 | -0.109 | 0.000 | 0.000 | 0.000 | 0.000 |
| 71 | 113 | 0 \| Global XYZ | 0.284 | -0.433 | -0.003 | 0.000 | 0.000 | 0.000 |
| 72 | 114 | 0 \| Global XYZ | 0.625 | -0.762 | -0.008 | 0.000 | 0.000 | 0.000 |
| 73 | 214 | 0 \| Global XYZ | 0.313 | -0.840 | -0.001 | 0.000 | 0.000 | 0.000 |
| 74 | 270 | 0 \| Global XYZ | 0.320 | -0.612 | -0.003 | 0.000 | 0.000 | 0.000 |
| 75 | 271 | 0 \| Global XYZ | 0.320 | -0.358 | -0.002 | 0.000 | 0.000 | 0.000 |
| 76 | 272 | 0 \| Global XYZ | 0.320 | -0.109 | 0.000 | 0.000 | 0.000 | 0.000 |
| 77 | 273 | 0 \| Global XYZ | 0.226 | 0.100 | 0.000 | 0.000 | 0.000 | 0.000 |
| 78 | 274 | 0 \| Global XYZ | 1.376 | 0.563 | 0.001 | 0.000 | 0.000 | 0.000 |
| 79 | 275 | 0 \| Global XYZ | 0.221 | 0.062 | 0.008 | 0.000 | 0.000 | 0.000 |
| 80 | 276 | 0 \| Global XYZ | 2.309 | -0.741 | -0.003 | 0.000 | 0.000 | 0.000 |
| 81 | 277 | 0 \| Global XYZ | 0.413 | -0.091 | -0.011 | 0.000 | 0.000 | 0.000 |
| 82 | 278 | 0 \| Global XYZ | 2.308 | -2.426 | -0.010 | 0.000 | 0.000 | 0.000 |
| 83 | 279 | 0 \| Global XYZ | 0.008 | -0.026 | 0.000 | 0.000 | 0.000 | 0.000 |
| 84 | 281 | 0 \| Global XYZ | 0.413 | -0.297 | -0.037 | 0.000 | 0.000 | 0.000 |
| 85 | 282 | 0 \| Global XYZ | 2.305 | -4.114 | -0.017 | 0.000 | 0.000 | 0.000 |
| 86 | 283 | 0 \| Global XYZ | 0.413 | -0.504 | -0.064 | 0.000 | 0.000 | 0.000 |
| 87 | 284 | 0 \| Global XYZ | 1.183 | 0.348 | -0.001 | 0.000 | 0.000 | 0.000 |
| 88 | 285 | 0 \| Global XYZ | 2.069 | -0.477 | 0.000 | 0.000 | 0.000 | 0.000 |
| 89 | 286 | 0 \| Global XYZ | 2.069 | -1.563 | 0.000 | 0.000 | 0.000 | 0.000 |
| 90 | 287 | 0 \| Global XYZ | 2.069 | -2.650 | -0.002 | 0.000 | 0.000 | 0.000 |
| 91 | 289 | 0 \| Global XYZ | 0.291 | -0.492 | -0.081 | 0.000 | 0.000 | 0.000 |
| 92 | 290 | 0 \| Global XYZ | 1.593 | -2.821 | -0.001 | 0.000 | 0.000 | 0.000 |
| 93 | 291 | 0 \| Global XYZ | 0.016 | -0.029 | 0.000 | 0.000 | 0.000 | 0.000 |
| 94 | 292 | 0 \| Global XYZ | 0.056 | -0.097 | -0.015 | 0.000 | 0.000 | 0.000 |
| 95 | 302 | 0 \| Global XYZ | 0.012 | 0.006 | 0.000 | 0.000 | 0.000 | 0.000 |
| 96 | 303 | 0 \| Global XYZ | 0.011 | -0.005 | 0.000 | 0.000 | 0.000 | 0.000 |
| 97 | 304 | 0 \| Global XYZ | 0.011 | -0.017 | 0.000 | 0.000 | 0.000 | 0.000 |
| 98 | 305 | 0 \| Global XYZ | 0.011 | -0.028 | 0.000 | 0.000 | 0.000 | 0.000 |
| 99 | 342 | 0 \| Global XYZ | 0.003 | 0.349 | 0.000 | 0.000 | 0.000 | 0.000 |
| 100 | 974 | 0 \| Global XYZ | 0.865 | -1.771 | -0.001 | 0.000 | 0.000 | 0.000 |
| 101 | 975 | 0 \| Global XYZ | 1.689 | -4.178 | -0.035 | 0.000 | 0.000 | 0.000 |
| 102 | 1008 | 0 \| Global XYZ | 0.175 | -0.342 | -0.030 | 0.000 | 0.000 | 0.000 |
| 103 | 1011 | 0 \| Global XYZ | 0.127 | -0.426 | 0.002 | 0.000 | 0.000 | 0.000 |
| 104 | 1017 | 0 \| Global XYZ | 0.214 | -0.713 | -0.173 | 0.000 | 0.000 | 0.000 |
| 105 | 1082 | 0 \| Global XYZ | 0.718 | -1.064 | -0.114 | 0.000 | 0.000 | 0.000 |
| 106 | 1083 | 0 \| Global XYZ | 0.718 | -0.758 | 0.004 | 0.000 | 0.000 | 0.000 |
| 107 | 1084 | 0 \| Global XYZ | 0.718 | -0.444 | 0.005 | 0.000 | 0.000 | 0.000 |
| 108 | 1085 | 0 \| Global XYZ | 0.718 | -0.135 | 0.001 | 0.000 | 0.000 | 0.000 |
| 109 | 1086 | 0 \| Global XYZ | 0.384 | 0.093 | -0.001 | 0.000 | 0.000 | 0.000 |
| 110 | 1087 | 0 \| Global XYZ | 0.001 | 0.105 | 0.000 | 0.000 | 0.000 | 0.000 |
| 111 | 1125 | 0 \| Global XYZ | 0.004 | 0.370 | 0.000 | 0.000 | 0.000 | 0.000 |
| 112 | 1126 | 0 \| Global XYZ | 0.311 | -0.759 | -0.011 | 0.000 | 0.000 | 0.000 |
| 113 | 1127 | 0 \| Global XYZ | 0.142 | -0.436 | 0.016 | 0.000 | 0.000 | 0.000 |
| 114 | 1129 | 0 \| Global XYZ | 0.158 | -0.727 | -0.020 | 0.000 | 0.000 | 0.000 |
| 115 | 1130 | 0 \| Global XYZ | 0.085 | -0.411 | -0.048 | 0.000 | 0.000 | 0.000 |
| 116 | 1139 | 0 \| Global XYZ | 0.000 | 0.008 | 0.000 | 0.000 | 0.000 | 0.000 |
| 117 | 1142 | 0 \| Global XYZ | -0.001 | -0.117 | 0.000 | 0.000 | 0.000 | 0.000 |
| 118 | 1144 | 0 \| Global XYZ | 0.363 | -0.613 | -0.037 | 0.000 | 0.000 | 0.000 |
| 119 | 1290 | 0 \| Global XYZ | 0.002 | 0.219 | 0.000 | 0.000 | 0.000 | 0.000 |
| 120 | 1291 | 0 \| Global XYZ | 0.000 | -0.053 | 0.000 | 0.000 | 0.000 | 0.000 |
| 121 | 1303 | 0 \| Global XYZ | -0.235 | -0.052 | -0.001 | 0.000 | 0.000 | 0.000 |
| 122 | 1305 | 0 \| Global XYZ | -0.197 | -0.122 | -0.001 | 0.000 | 0.000 | 0.000 |
| 123 | 1306 | 0 \| Global XYZ | -0.160 | 0.006 | -0.002 | 0.000 | 0.000 | 0.000 |
| 124 | 1307 | 0 \| Global XYZ | 0.090 | 0.040 | 0.000 | 0.000 | 0.000 | 0.000 |
| 125 | 1308 | 0 \| Global XYZ | -0.131 | -0.046 | -0.002 | 0.000 | 0.000 | 0.000 |
| 126 | 1309 | 0 \| Global XYZ | 0.078 | 0.066 | 0.000 | 0.000 | 0.000 | 0.000 |
| 127 | 1311 | 0 \| Global XYZ | -0.024 | -0.293 | 0.006 | 0.000 | 0.000 | 0.000 |
| 128 | 1312 | 0 \| Global XYZ | 0.186 | -0.359 | 0.014 | 0.000 | 0.000 | 0.000 |
| 129 | 1313 | 0 \| Global XYZ | 0.109 | 0.028 | 0.000 | 0.000 | 0.000 | 0.000 |
| 130 | 1315 | 0 \| Global XYZ | -0.218 | -0.189 | -0.006 | 0.000 | 0.000 | 0.000 |
| 131 | 1316 | 0 \| Global XYZ | -0.385 | -0.060 | -0.013 | 0.000 | 0.000 | 0.000 |
| 132 | 1317 | 0 \| Global XYZ | -0.039 | 0.104 | 0.000 | 0.000 | 0.000 | 0.000 |
| 133 | 1320 | 0 \| Global XYZ | -0.269 | 0.141 | -0.016 | 0.000 | 0.000 | 0.000 |
| 134 | 1321 | 0 \| Global XYZ | -0.212 | 0.333 | -0.028 | 0.000 | 0.000 | 0.000 |
| 135 | 1322 | 0 \| Global XYZ | 0.130 | 0.075 | 0.000 | 0.000 | 0.000 | 0.000 |
| 136 | 1323 | 0 \| Global XYZ | -0.268 | -0.109 | 0.012 | 0.000 | 0.000 | 0.000 |

## 3.1 NODAL LOADS - BY COMPONENTS - COORDINATE SYSTEM

LC10

| No. | On Nodes No. | Coordinate System | Force [kN] $P_X$ / $P_U$ | $P_Y$ / $P_V$ | $P_Z$ / $P_W$ | Moment [kNm] $M_X$ / $M_U$ | $M_Y$ / $M_V$ | $M_Z$ / $M_W$ |
|---|---|---|---|---|---|---|---|---|
| 137 | 1324 | 0 \| Global XYZ | -0.206 | -0.251 | 0.020 | 0.000 | 0.000 | 0.000 |
| 138 | 1325 | 0 \| Global XYZ | 0.129 | -0.058 | 0.000 | 0.000 | 0.000 | 0.000 |
| 139 | 1326 | 0 \| Global XYZ | -0.266 | -0.359 | 0.042 | 0.000 | 0.000 | 0.000 |
| 140 | 1327 | 0 \| Global XYZ | -0.202 | -0.816 | 0.068 | 0.000 | 0.000 | 0.000 |
| 141 | 1328 | 0 \| Global XYZ | 0.128 | -0.191 | 0.001 | 0.000 | 0.000 | 0.000 |
| 142 | 1329 | 0 \| Global XYZ | -0.266 | -0.613 | 0.069 | 0.000 | 0.000 | 0.000 |
| 143 | 1330 | 0 \| Global XYZ | -0.202 | -1.394 | 0.114 | 0.000 | 0.000 | 0.000 |
| 144 | 1331 | 0 \| Global XYZ | 0.128 | -0.326 | 0.002 | 0.000 | 0.000 | 0.000 |
| 145 | 1332 | 0 \| Global XYZ | -0.325 | -1.028 | 0.035 | 0.000 | 0.000 | 0.000 |
| 146 | 1333 | 0 \| Global XYZ | -0.235 | -2.276 | 0.109 | 0.000 | 0.000 | 0.000 |
| 147 | 1335 | 0 \| Global XYZ | 0.108 | -0.380 | 0.002 | 0.000 | 0.000 | 0.000 |
| 148 | 1336 | 0 \| Global XYZ | 0.137 | 0.085 | -0.001 | 0.000 | 0.000 | 0.000 |
| 149 | 1337 | 0 \| Global XYZ | 0.119 | 0.120 | -0.001 | 0.000 | 0.000 | 0.000 |
| 150 | 1338 | 0 \| Global XYZ | 0.287 | -0.050 | 0.006 | 0.000 | 0.000 | 0.000 |
| 151 | 1339 | 0 \| Global XYZ | -0.197 | 0.198 | -0.006 | 0.000 | 0.000 | 0.000 |
| 152 | 1340 | 0 \| Global XYZ | 2.146 | 0.355 | 0.167 | 0.000 | 0.000 | 0.000 |
| 153 | 1341 | 0 \| Global XYZ | 2.146 | -0.166 | -0.030 | 0.000 | 0.000 | 0.000 |
| 154 | 1342 | 0 \| Global XYZ | 1.958 | -0.109 | 0.011 | 0.000 | 0.000 | 0.000 |
| 155 | 1343 | 0 \| Global XYZ | 2.146 | -1.211 | 0.064 | 0.000 | 0.000 | 0.000 |
| 156 | 1344 | 0 \| Global XYZ | 1.958 | 0.233 | 0.146 | 0.000 | 0.000 | 0.000 |
| 157 | 1345 | 0 \| Global XYZ | 0.660 | 0.153 | 0.046 | 0.000 | 0.000 | 0.000 |
| 158 | 1346 | 0 \| Global XYZ | 0.661 | -0.072 | -0.026 | 0.000 | 0.000 | 0.000 |
| 159 | 1347 | 0 \| Global XYZ | 2.145 | -1.733 | -0.096 | 0.000 | 0.000 | 0.000 |
| 160 | 1348 | 0 \| Global XYZ | 1.958 | -1.136 | -0.065 | 0.000 | 0.000 | 0.000 |
| 161 | 1349 | 0 \| Global XYZ | 1.958 | -0.794 | 0.031 | 0.000 | 0.000 | 0.000 |
| 162 | 1350 | 0 \| Global XYZ | 0.661 | -0.521 | 0.035 | 0.000 | 0.000 | 0.000 |
| 163 | 1351 | 0 \| Global XYZ | 0.660 | -0.746 | -0.029 | 0.000 | 0.000 | 0.000 |
| 164 | 1352 | 0 \| Global XYZ | 2.144 | -2.778 | 0.075 | 0.000 | 0.000 | 0.000 |
| 165 | 1353 | 0 \| Global XYZ | 2.143 | -3.301 | -0.087 | 0.000 | 0.000 | 0.000 |
| 166 | 1354 | 0 \| Global XYZ | 1.957 | -2.165 | -0.038 | 0.000 | 0.000 | 0.000 |
| 167 | 1355 | 0 \| Global XYZ | 1.958 | -1.821 | 0.062 | 0.000 | 0.000 | 0.000 |
| 168 | 1356 | 0 \| Global XYZ | 0.659 | -1.196 | 0.039 | 0.000 | 0.000 | 0.000 |
| 169 | 1357 | 0 \| Global XYZ | 0.659 | -1.421 | -0.024 | 0.000 | 0.000 | 0.000 |
| 170 | 1358 | 0 \| Global XYZ | 2.141 | -4.349 | 0.039 | 0.000 | 0.000 | 0.000 |
| 171 | 1359 | 0 \| Global XYZ | 1.904 | -4.342 | -0.107 | 0.000 | 0.000 | 0.000 |
| 172 | 1360 | 0 \| Global XYZ | 1.743 | -2.847 | -0.083 | 0.000 | 0.000 | 0.000 |
| 173 | 1361 | 0 \| Global XYZ | 1.957 | -2.851 | 0.010 | 0.000 | 0.000 | 0.000 |
| 174 | 1362 | 0 \| Global XYZ | 0.657 | -1.873 | 0.037 | 0.000 | 0.000 | 0.000 |
| 175 | 1363 | 0 \| Global XYZ | 0.582 | -1.864 | -0.027 | 0.000 | 0.000 | 0.000 |
| 176 | 1364 | 0 \| Global XYZ | 1.544 | -2.948 | 0.028 | 0.000 | 0.000 | 0.000 |
| 177 | 1365 | 0 \| Global XYZ | 1.671 | -4.453 | 0.164 | 0.000 | 0.000 | 0.000 |
| 178 | 1366 | 0 \| Global XYZ | 0.413 | 0.047 | 0.007 | 0.000 | 0.000 | 0.000 |
| 179 | 1367 | 0 \| Global XYZ | 0.502 | -1.878 | 0.023 | 0.000 | 0.000 | 0.000 |
| 180 | 1371 | 0 \| Global XYZ | 0.138 | -0.580 | 0.001 | 0.000 | 0.000 | 0.000 |
| 181 | 1372 | 0 \| Global XYZ | 0.047 | -0.202 | 0.003 | 0.000 | 0.000 | 0.000 |
| 182 | 1379 | 0 \| Global XYZ | 0.264 | 0.019 | 0.003 | 0.000 | 0.000 | 0.000 |
| 183 | 1396 | 0 \| Global XYZ | 0.413 | -0.022 | -0.001 | 0.000 | 0.000 | 0.000 |
| 184 | 1397 | 0 \| Global XYZ | 0.262 | -1.052 | -0.009 | 0.000 | 0.000 | 0.000 |
| 185 | 1398 | 0 \| Global XYZ | 0.413 | -0.160 | -0.022 | 0.000 | 0.000 | 0.000 |
| 186 | 1399 | 0 \| Global XYZ | 0.413 | -0.228 | -0.031 | 0.000 | 0.000 | 0.000 |
| 187 | 1400 | 0 \| Global XYZ | 0.413 | -0.366 | -0.041 | 0.000 | 0.000 | 0.000 |
| 188 | 1401 | 0 \| Global XYZ | 0.413 | -0.435 | -0.047 | 0.000 | 0.000 | 0.000 |
| 189 | 1402 | 0 \| Global XYZ | 0.413 | -0.573 | -0.096 | 0.000 | 0.000 | 0.000 |
| 190 | 1403 | 0 \| Global XYZ | 0.368 | -0.572 | -0.106 | 0.000 | 0.000 | 0.000 |
| 191 | 1404 | 0 \| Global XYZ | 0.313 | -0.571 | -0.072 | 0.000 | 0.000 | 0.000 |
| 192 | 1405 | 0 \| Global XYZ | 0.426 | 0.150 | 0.002 | 0.000 | 0.000 | 0.000 |
| 193 | 1410 | 0 \| Global XYZ | 0.130 | 0.058 | 0.000 | 0.000 | 0.000 | 0.000 |
| 194 | 1411 | 0 \| Global XYZ | 0.140 | 0.091 | -0.001 | 0.000 | 0.000 | 0.000 |
| 195 | 1412 | 0 \| Global XYZ | 0.100 | -0.401 | 0.002 | 0.000 | 0.000 | 0.000 |
| 196 | 1413 | 0 \| Global XYZ | 0.101 | 0.007 | 0.001 | 0.000 | 0.000 | 0.000 |
| 197 | 1414 | 0 \| Global XYZ | 0.037 | 0.002 | 0.001 | 0.000 | 0.000 | 0.000 |
| 198 | 1415 | 0 \| Global XYZ | 0.400 | 0.020 | 0.000 | 0.000 | 0.000 | 0.000 |
| 199 | 1416 | 0 \| Global XYZ | 0.400 | -0.296 | -0.001 | 0.000 | 0.000 | 0.000 |
| 200 | 1417 | 0 \| Global XYZ | 0.263 | -0.282 | 0.001 | 0.000 | 0.000 | 0.000 |
| 201 | 1418 | 0 \| Global XYZ | 0.400 | -0.615 | -0.004 | 0.000 | 0.000 | 0.000 |
| 202 | 1419 | 0 \| Global XYZ | 0.265 | -0.594 | 0.003 | 0.000 | 0.000 | 0.000 |
| 203 | 1420 | 0 \| Global XYZ | 0.399 | -0.941 | 0.027 | 0.000 | 0.000 | 0.000 |
| 204 | 1421 | 0 \| Global XYZ | 0.262 | -0.896 | 0.001 | 0.000 | 0.000 | 0.000 |
| 205 | 1422 | 0 \| Global XYZ | 0.064 | -0.216 | -0.072 | 0.000 | 0.000 | 0.000 |
| 206 | 1424 | 0 \| Global XYZ | 0.156 | -0.676 | 0.004 | 0.000 | 0.000 | 0.000 |
| 207 | 1425 | 0 \| Global XYZ | 0.057 | -0.415 | -0.003 | 0.000 | 0.000 | 0.000 |
| 208 | 1426 | 0 \| Global XYZ | 0.168 | -0.502 | 0.008 | 0.000 | 0.000 | 0.000 |
| 209 | 1427 | 0 \| Global XYZ | 0.035 | -0.273 | 0.000 | 0.000 | 0.000 | 0.000 |
| 210 | 1428 | 0 \| Global XYZ | 0.034 | -0.236 | 0.000 | 0.000 | 0.000 | 0.000 |
| 211 | 1431 | 0 \| Global XYZ | 0.030 | -0.114 | 0.001 | 0.000 | 0.000 | 0.000 |
| 212 | 1432 | 0 \| Global XYZ | 0.030 | -0.126 | 0.000 | 0.000 | 0.000 | 0.000 |

## 3.1 NODAL LOADS - BY COMPONENTS - COORDINATE SYSTEM

LC11

**LC11**
Ersatzlasten aus
Eigenform Nr. 3 - 1.02 Hz

| No. | On Nodes No. | Coordinate System | Force [kN] $P_X$ / $P_U$ | $P_Y$ / $P_V$ | $P_Z$ / $P_W$ | Moment [kNm] $M_X$ / $M_U$ | $M_Y$ / $M_V$ | $M_Z$ / $M_W$ |
|---|---|---|---|---|---|---|---|---|
| 1 | 30 | 0 \| Global XYZ | -0.139 | -0.128 | 0.000 | 0.000 | 0.000 | 0.000 |
| 2 | 31 | 0 \| Global XYZ | -0.374 | -0.226 | -0.005 | 0.000 | 0.000 | 0.000 |
| 3 | 32 | 0 \| Global XYZ | -0.012 | -0.099 | 0.001 | 0.000 | 0.000 | 0.000 |
| 4 | 33 | 0 \| Global XYZ | -0.343 | 0.169 | -0.024 | 0.000 | 0.000 | 0.000 |
| 5 | 34 | 0 \| Global XYZ | -0.026 | -0.309 | 0.001 | 0.000 | 0.000 | 0.000 |
| 6 | 35 | 0 \| Global XYZ | -0.025 | -0.189 | 0.001 | 0.000 | 0.000 | 0.000 |
| 7 | 36 | 0 \| Global XYZ | -0.025 | -0.066 | 0.001 | 0.000 | 0.000 | 0.000 |

## 3.1 NODAL LOADS - BY COMPONENTS - COORDINATE SYSTEM

LC11

| No. | On Nodes No. | Coordinate System | Force [kN] $P_X$ / $P_U$ | $P_Y$ / $P_V$ | $P_Z$ / $P_W$ | Moment [kNm] $M_X$ / $M_U$ | $M_Y$ / $M_V$ | $M_Z$ / $M_W$ |
|---|---|---|---|---|---|---|---|---|
| 8 | 37 | 0 \| Global XYZ | -0.031 | 0.022 | -0.002 | 0.000 | 0.000 | 0.000 |
| 9 | 38 | 0 \| Global XYZ | 0.010 | 0.041 | -0.001 | 0.000 | 0.000 | 0.000 |
| 10 | 39 | 0 \| Global XYZ | -0.002 | 0.021 | -0.001 | 0.000 | 0.000 | 0.000 |
| 11 | 40 | 0 \| Global XYZ | -0.038 | 0.036 | -0.002 | 0.000 | 0.000 | 0.000 |
| 12 | 41 | 0 \| Global XYZ | -0.037 | -0.189 | 0.001 | 0.000 | 0.000 | 0.000 |
| 13 | 42 | 0 \| Global XYZ | -0.037 | -0.381 | 0.002 | 0.000 | 0.000 | 0.000 |
| 14 | 43 | 0 \| Global XYZ | -0.039 | -0.551 | 0.003 | 0.000 | 0.000 | 0.000 |
| 15 | 44 | 0 \| Global XYZ | -0.073 | -0.011 | -0.001 | 0.000 | 0.000 | 0.000 |
| 16 | 45 | 0 \| Global XYZ | -0.220 | 0.134 | -0.010 | 0.000 | 0.000 | 0.000 |
| 17 | 46 | 0 \| Global XYZ | 0.009 | 0.538 | 0.000 | 0.000 | 0.000 | 0.000 |
| 18 | 47 | 0 \| Global XYZ | 0.304 | -0.036 | 0.001 | 0.000 | 0.000 | 0.000 |
| 19 | 48 | 0 \| Global XYZ | -0.481 | 0.368 | -0.002 | 0.000 | 0.000 | 0.000 |
| 20 | 49 | 0 \| Global XYZ | -0.208 | 0.087 | -0.001 | 0.000 | 0.000 | 0.000 |
| 21 | 50 | 0 \| Global XYZ | -0.245 | 0.153 | -0.001 | 0.000 | 0.000 | 0.000 |
| 22 | 51 | 0 \| Global XYZ | -0.107 | -0.314 | 0.000 | 0.000 | 0.000 | 0.000 |
| 23 | 52 | 0 \| Global XYZ | -0.179 | -2.177 | 0.009 | 0.000 | 0.000 | 0.000 |
| 24 | 53 | 0 \| Global XYZ | -0.505 | -1.146 | 0.010 | 0.000 | 0.000 | 0.000 |
| 25 | 54 | 0 \| Global XYZ | -0.367 | -1.442 | -0.028 | 0.000 | 0.000 | 0.000 |
| 26 | 55 | 0 \| Global XYZ | -0.139 | -0.819 | -0.004 | 0.000 | 0.000 | 0.000 |
| 27 | 56 | 0 \| Global XYZ | -0.063 | -0.142 | 0.000 | 0.000 | 0.000 | 0.000 |
| 28 | 57 | 0 \| Global XYZ | -0.386 | -1.305 | -0.025 | 0.000 | 0.000 | 0.000 |
| 29 | 58 | 0 \| Global XYZ | -0.270 | -2.546 | 0.011 | 0.000 | 0.000 | 0.000 |
| 30 | 59 | 0 \| Global XYZ | -0.505 | -0.842 | 0.007 | 0.000 | 0.000 | 0.000 |
| 31 | 60 | 0 \| Global XYZ | -0.370 | -1.060 | -0.020 | 0.000 | 0.000 | 0.000 |
| 32 | 61 | 0 \| Global XYZ | -0.139 | -0.602 | -0.005 | 0.000 | 0.000 | 0.000 |
| 33 | 63 | 0 \| Global XYZ | -0.063 | -0.098 | 0.000 | 0.000 | 0.000 | 0.000 |
| 34 | 64 | 0 \| Global XYZ | -0.025 | 0.036 | 0.007 | 0.000 | 0.000 | 0.000 |
| 35 | 65 | 0 \| Global XYZ | -0.390 | -0.900 | -0.017 | 0.000 | 0.000 | 0.000 |
| 36 | 66 | 0 \| Global XYZ | -0.262 | -1.736 | 0.008 | 0.000 | 0.000 | 0.000 |
| 37 | 68 | 0 \| Global XYZ | -0.505 | -0.515 | 0.006 | 0.000 | 0.000 | 0.000 |
| 38 | 74 | 0 \| Global XYZ | -0.007 | 0.003 | 0.000 | 0.000 | 0.000 | 0.000 |
| 39 | 78 | 0 \| Global XYZ | -0.171 | -0.105 | 0.002 | 0.000 | 0.000 | 0.000 |
| 40 | 79 | 0 \| Global XYZ | -0.313 | 0.049 | 0.001 | 0.000 | 0.000 | 0.000 |
| 41 | 80 | 0 \| Global XYZ | -0.127 | -2.330 | 0.011 | 0.000 | 0.000 | 0.000 |
| 42 | 81 | 0 \| Global XYZ | -0.006 | 0.001 | 0.000 | 0.000 | 0.000 | 0.000 |
| 43 | 82 | 0 \| Global XYZ | -0.267 | -0.039 | 0.001 | 0.000 | 0.000 | 0.000 |
| 44 | 83 | 0 \| Global XYZ | -0.010 | 0.008 | 0.000 | 0.000 | 0.000 | 0.000 |
| 45 | 84 | 0 \| Global XYZ | -0.422 | 0.108 | 0.003 | 0.000 | 0.000 | 0.000 |
| 46 | 85 | 0 \| Global XYZ | -0.378 | -0.022 | -0.003 | 0.000 | 0.000 | 0.000 |
| 47 | 86 | 0 \| Global XYZ | -0.146 | -2.080 | 0.010 | 0.000 | 0.000 | 0.000 |
| 48 | 87 | 0 \| Global XYZ | -0.505 | -0.180 | -0.004 | 0.000 | 0.000 | 0.000 |
| 49 | 89 | 0 \| Global XYZ | -0.254 | -0.917 | 0.003 | 0.000 | 0.000 | 0.000 |
| 50 | 92 | 0 \| Global XYZ | 0.007 | 0.000 | 0.000 | 0.000 | 0.000 | 0.000 |
| 51 | 93 | 0 \| Global XYZ | 0.149 | -0.185 | -0.001 | 0.000 | 0.000 | 0.000 |
| 52 | 94 | 0 \| Global XYZ | -0.145 | -0.971 | -0.004 | 0.000 | 0.000 | 0.000 |
| 53 | 95 | 0 \| Global XYZ | -0.281 | -1.442 | -0.007 | 0.000 | 0.000 | 0.000 |
| 54 | 96 | 0 \| Global XYZ | -0.141 | -1.456 | 0.007 | 0.000 | 0.000 | 0.000 |
| 55 | 97 | 0 \| Global XYZ | -0.283 | -1.000 | -0.005 | 0.000 | 0.000 | 0.000 |
| 56 | 98 | 0 \| Global XYZ | 0.258 | -1.687 | 0.089 | 0.000 | 0.000 | 0.000 |
| 57 | 99 | 0 \| Global XYZ | -0.138 | -0.721 | 0.003 | 0.000 | 0.000 | 0.000 |
| 58 | 100 | 0 \| Global XYZ | -0.284 | -0.496 | -0.002 | 0.000 | 0.000 | 0.000 |
| 59 | 101 | 0 \| Global XYZ | 0.282 | -2.400 | 0.120 | 0.000 | 0.000 | 0.000 |
| 60 | 102 | 0 \| Global XYZ | 0.260 | -1.169 | 0.062 | 0.000 | 0.000 | 0.000 |
| 61 | 103 | 0 \| Global XYZ | 0.015 | -0.052 | 0.003 | 0.000 | 0.000 | 0.000 |
| 62 | 104 | 0 \| Global XYZ | -0.143 | -0.039 | -0.001 | 0.000 | 0.000 | 0.000 |
| 63 | 105 | 0 \| Global XYZ | 0.260 | -0.578 | 0.028 | 0.000 | 0.000 | 0.000 |
| 64 | 106 | 0 \| Global XYZ | -0.258 | -0.024 | -0.002 | 0.000 | 0.000 | 0.000 |
| 65 | 107 | 0 \| Global XYZ | 0.298 | -0.035 | 0.001 | 0.000 | 0.000 | 0.000 |
| 66 | 108 | 0 \| Global XYZ | 0.037 | -0.052 | 0.005 | 0.000 | 0.000 | 0.000 |
| 67 | 109 | 0 \| Global XYZ | -0.063 | -0.049 | 0.000 | 0.000 | 0.000 | 0.000 |
| 68 | 110 | 0 \| Global XYZ | -0.392 | -0.448 | -0.008 | 0.000 | 0.000 | 0.000 |
| 69 | 111 | 0 \| Global XYZ | -0.012 | -0.062 | 0.000 | 0.000 | 0.000 | 0.000 |
| 70 | 112 | 0 \| Global XYZ | -0.012 | -0.023 | 0.000 | 0.000 | 0.000 | 0.000 |
| 71 | 113 | 0 \| Global XYZ | -0.138 | -0.368 | -0.002 | 0.000 | 0.000 | 0.000 |
| 72 | 114 | 0 \| Global XYZ | -0.373 | -0.648 | -0.012 | 0.000 | 0.000 | 0.000 |
| 73 | 214 | 0 \| Global XYZ | -0.153 | -0.014 | -0.001 | 0.000 | 0.000 | 0.000 |
| 74 | 270 | 0 \| Global XYZ | -0.156 | -0.273 | -0.001 | 0.000 | 0.000 | 0.000 |
| 75 | 271 | 0 \| Global XYZ | -0.156 | -0.549 | -0.003 | 0.000 | 0.000 | 0.000 |
| 76 | 272 | 0 \| Global XYZ | -0.156 | -0.796 | -0.004 | 0.000 | 0.000 | 0.000 |
| 77 | 273 | 0 \| Global XYZ | -0.110 | -0.734 | -0.003 | 0.000 | 0.000 | 0.000 |
| 78 | 274 | 0 \| Global XYZ | -0.730 | -4.166 | -0.017 | 0.000 | 0.000 | 0.000 |
| 79 | 275 | 0 \| Global XYZ | -0.149 | -0.458 | -0.057 | 0.000 | 0.000 | 0.000 |
| 80 | 276 | 0 \| Global XYZ | -1.219 | -5.312 | -0.023 | 0.000 | 0.000 | 0.000 |
| 81 | 277 | 0 \| Global XYZ | -0.279 | -0.651 | -0.082 | 0.000 | 0.000 | 0.000 |
| 82 | 278 | 0 \| Global XYZ | -1.208 | -3.623 | -0.017 | 0.000 | 0.000 | 0.000 |
| 83 | 279 | 0 \| Global XYZ | -0.002 | 0.000 | 0.000 | 0.000 | 0.000 | 0.000 |
| 84 | 281 | 0 \| Global XYZ | -0.279 | -0.444 | -0.057 | 0.000 | 0.000 | 0.000 |
| 85 | 282 | 0 \| Global XYZ | -1.199 | -1.915 | -0.006 | 0.000 | 0.000 | 0.000 |
| 86 | 283 | 0 \| Global XYZ | -0.279 | -0.235 | -0.028 | 0.000 | 0.000 | 0.000 |
| 87 | 284 | 0 \| Global XYZ | -0.781 | -2.574 | 0.000 | 0.000 | 0.000 | 0.000 |
| 88 | 285 | 0 \| Global XYZ | -1.365 | -3.422 | -0.001 | 0.000 | 0.000 | 0.000 |
| 89 | 286 | 0 \| Global XYZ | -1.365 | -2.335 | 0.000 | 0.000 | 0.000 | 0.000 |
| 90 | 287 | 0 \| Global XYZ | -1.365 | -1.235 | 0.000 | 0.000 | 0.000 | 0.000 |
| 91 | 289 | 0 \| Global XYZ | -0.197 | -0.028 | -0.004 | 0.000 | 0.000 | 0.000 |
| 92 | 290 | 0 \| Global XYZ | -1.051 | -0.159 | 0.001 | 0.000 | 0.000 | 0.000 |
| 93 | 291 | 0 \| Global XYZ | -0.011 | -0.001 | 0.000 | 0.000 | 0.000 | 0.000 |
| 94 | 292 | 0 \| Global XYZ | -0.038 | -0.003 | -0.001 | 0.000 | 0.000 | 0.000 |
| 95 | 302 | 0 \| Global XYZ | -0.002 | -0.048 | 0.000 | 0.000 | 0.000 | 0.000 |
| 96 | 303 | 0 \| Global XYZ | -0.002 | -0.037 | 0.000 | 0.000 | 0.000 | 0.000 |
| 97 | 304 | 0 \| Global XYZ | -0.002 | -0.025 | 0.000 | 0.000 | 0.000 | 0.000 |
| 98 | 305 | 0 \| Global XYZ | -0.002 | -0.013 | 0.000 | 0.000 | 0.000 | 0.000 |
| 99 | 342 | 0 \| Global XYZ | 0.003 | -0.170 | 0.000 | 0.000 | 0.000 | 0.000 |

## 3.1 NODAL LOADS - BY COMPONENTS - COORDINATE SYSTEM

LC11

| No. | On Nodes No. | Coordinate System | Force [kN] $P_X$ / $P_U$ | $P_Y$ / $P_V$ | $P_Z$ / $P_W$ | Moment [kNm] $M_X$ / $M_U$ | $M_Y$ / $M_V$ | $M_Z$ / $M_W$ |
|---|---|---|---|---|---|---|---|---|
| 100 | 974 | 0 \| Global XYZ | -0.570 | 0.158 | -0.001 | 0.000 | 0.000 | 0.000 |
| 101 | 975 | 0 \| Global XYZ | -0.876 | -0.235 | 0.014 | 0.000 | 0.000 | 0.000 |
| 102 | 1008 | 0 \| Global XYZ | -0.119 | 0.031 | 0.003 | 0.000 | 0.000 | 0.000 |
| 103 | 1011 | 0 \| Global XYZ | -0.040 | -0.011 | 0.000 | 0.000 | 0.000 | 0.000 |
| 104 | 1017 | 0 \| Global XYZ | -0.100 | 0.092 | 0.021 | 0.000 | 0.000 | 0.000 |
| 105 | 1082 | 0 \| Global XYZ | -0.503 | -0.017 | -0.004 | 0.000 | 0.000 | 0.000 |
| 106 | 1083 | 0 \| Global XYZ | -0.503 | -0.338 | 0.003 | 0.000 | 0.000 | 0.000 |
| 107 | 1084 | 0 \| Global XYZ | -0.503 | -0.679 | 0.006 | 0.000 | 0.000 | 0.000 |
| 108 | 1085 | 0 \| Global XYZ | -0.502 | -0.985 | 0.009 | 0.000 | 0.000 | 0.000 |
| 109 | 1086 | 0 \| Global XYZ | -0.269 | -0.686 | 0.006 | 0.000 | 0.000 | 0.000 |
| 110 | 1087 | 0 \| Global XYZ | 0.001 | -0.009 | 0.000 | 0.000 | 0.000 | 0.000 |
| 111 | 1125 | 0 \| Global XYZ | 0.007 | -0.029 | 0.000 | 0.000 | 0.000 | 0.000 |
| 112 | 1126 | 0 \| Global XYZ | -0.186 | 0.083 | -0.001 | 0.000 | 0.000 | 0.000 |
| 113 | 1127 | 0 \| Global XYZ | -0.070 | 0.048 | -0.004 | 0.000 | 0.000 | 0.000 |
| 114 | 1129 | 0 \| Global XYZ | -0.039 | 0.080 | 0.002 | 0.000 | 0.000 | 0.000 |
| 115 | 1130 | 0 \| Global XYZ | -0.021 | 0.066 | 0.006 | 0.000 | 0.000 | 0.000 |
| 116 | 1139 | 0 \| Global XYZ | 0.000 | -0.001 | 0.000 | 0.000 | 0.000 | 0.000 |
| 117 | 1142 | 0 \| Global XYZ | 0.004 | 0.276 | 0.000 | 0.000 | 0.000 | 0.000 |
| 118 | 1144 | 0 \| Global XYZ | -0.254 | 0.067 | 0.004 | 0.000 | 0.000 | 0.000 |
| 119 | 1290 | 0 \| Global XYZ | 0.007 | 0.083 | 0.000 | 0.000 | 0.000 | 0.000 |
| 120 | 1291 | 0 \| Global XYZ | 0.010 | 0.469 | 0.000 | 0.000 | 0.000 | 0.000 |
| 121 | 1303 | 0 \| Global XYZ | 0.342 | 0.219 | -0.004 | 0.000 | 0.000 | 0.000 |
| 122 | 1305 | 0 \| Global XYZ | 0.294 | 0.323 | -0.004 | 0.000 | 0.000 | 0.000 |
| 123 | 1306 | 0 \| Global XYZ | 0.295 | 0.354 | -0.010 | 0.000 | 0.000 | 0.000 |
| 124 | 1307 | 0 \| Global XYZ | -0.071 | 0.027 | 0.000 | 0.000 | 0.000 | 0.000 |
| 125 | 1308 | 0 \| Global XYZ | 0.251 | 0.446 | -0.009 | 0.000 | 0.000 | 0.000 |
| 126 | 1309 | 0 \| Global XYZ | -0.056 | 0.011 | 0.000 | 0.000 | 0.000 | 0.000 |
| 127 | 1311 | 0 \| Global XYZ | 0.062 | 0.563 | -0.012 | 0.000 | 0.000 | 0.000 |
| 128 | 1312 | 0 \| Global XYZ | -0.183 | 0.874 | -0.026 | 0.000 | 0.000 | 0.000 |
| 129 | 1313 | 0 \| Global XYZ | -0.105 | 0.079 | 0.000 | 0.000 | 0.000 | 0.000 |
| 130 | 1315 | 0 \| Global XYZ | 0.293 | 0.443 | 0.005 | 0.000 | 0.000 | 0.000 |
| 131 | 1316 | 0 \| Global XYZ | 0.514 | 0.510 | 0.012 | 0.000 | 0.000 | 0.000 |
| 132 | 1317 | 0 \| Global XYZ | 0.068 | -0.005 | 0.000 | 0.000 | 0.000 | 0.000 |
| 133 | 1320 | 0 \| Global XYZ | 0.552 | -1.038 | 0.121 | 0.000 | 0.000 | 0.000 |
| 134 | 1321 | 0 \| Global XYZ | 0.732 | -2.458 | 0.204 | 0.000 | 0.000 | 0.000 |
| 135 | 1322 | 0 \| Global XYZ | -0.029 | -0.553 | 0.003 | 0.000 | 0.000 | 0.000 |
| 136 | 1323 | 0 \| Global XYZ | 0.544 | -0.796 | 0.098 | 0.000 | 0.000 | 0.000 |
| 137 | 1324 | 0 \| Global XYZ | 0.704 | -1.833 | 0.160 | 0.000 | 0.000 | 0.000 |
| 138 | 1325 | 0 \| Global XYZ | -0.029 | -0.424 | 0.002 | 0.000 | 0.000 | 0.000 |
| 139 | 1326 | 0 \| Global XYZ | 0.533 | -0.550 | 0.063 | 0.000 | 0.000 | 0.000 |
| 140 | 1327 | 0 \| Global XYZ | 0.685 | -1.252 | 0.104 | 0.000 | 0.000 | 0.000 |
| 141 | 1328 | 0 \| Global XYZ | -0.026 | -0.293 | 0.001 | 0.000 | 0.000 | 0.000 |
| 142 | 1329 | 0 \| Global XYZ | 0.530 | -0.272 | 0.035 | 0.000 | 0.000 | 0.000 |
| 143 | 1330 | 0 \| Global XYZ | 0.682 | -0.619 | 0.054 | 0.000 | 0.000 | 0.000 |
| 144 | 1331 | 0 \| Global XYZ | -0.026 | -0.145 | 0.001 | 0.000 | 0.000 | 0.000 |
| 145 | 1332 | 0 \| Global XYZ | 0.651 | -0.017 | 0.004 | 0.000 | 0.000 | 0.000 |
| 146 | 1333 | 0 \| Global XYZ | 0.792 | -0.038 | 0.005 | 0.000 | 0.000 | 0.000 |
| 147 | 1335 | 0 \| Global XYZ | -0.023 | -0.007 | 0.000 | 0.000 | 0.000 | 0.000 |
| 148 | 1336 | 0 \| Global XYZ | -0.093 | 0.153 | -0.004 | 0.000 | 0.000 | 0.000 |
| 149 | 1337 | 0 \| Global XYZ | -0.079 | 0.130 | -0.004 | 0.000 | 0.000 | 0.000 |
| 150 | 1338 | 0 \| Global XYZ | -0.317 | 0.375 | -0.012 | 0.000 | 0.000 | 0.000 |
| 151 | 1339 | 0 \| Global XYZ | 0.271 | 0.070 | 0.006 | 0.000 | 0.000 | 0.000 |
| 152 | 1340 | 0 \| Global XYZ | -1.136 | -5.975 | -0.102 | 0.000 | 0.000 | 0.000 |
| 153 | 1341 | 0 \| Global XYZ | -1.136 | -5.457 | -0.012 | 0.000 | 0.000 | 0.000 |
| 154 | 1342 | 0 \| Global XYZ | -1.292 | -3.579 | -0.009 | 0.000 | 0.000 | 0.000 |
| 155 | 1343 | 0 \| Global XYZ | -1.130 | -4.416 | -0.049 | 0.000 | 0.000 | 0.000 |
| 156 | 1344 | 0 \| Global XYZ | -1.291 | -3.919 | -0.100 | 0.000 | 0.000 | 0.000 |
| 157 | 1345 | 0 \| Global XYZ | -0.228 | -2.571 | 0.006 | 0.000 | 0.000 | 0.000 |
| 158 | 1346 | 0 \| Global XYZ | -0.227 | -2.348 | 0.019 | 0.000 | 0.000 | 0.000 |
| 159 | 1347 | 0 \| Global XYZ | -1.126 | -3.893 | 0.027 | 0.000 | 0.000 | 0.000 |
| 160 | 1348 | 0 \| Global XYZ | -1.292 | -2.554 | 0.044 | 0.000 | 0.000 | 0.000 |
| 161 | 1349 | 0 \| Global XYZ | -1.292 | -2.897 | -0.022 | 0.000 | 0.000 | 0.000 |
| 162 | 1350 | 0 \| Global XYZ | -0.223 | -1.899 | 0.004 | 0.000 | 0.000 | 0.000 |
| 163 | 1351 | 0 \| Global XYZ | -0.221 | -1.674 | 0.015 | 0.000 | 0.000 | 0.000 |
| 164 | 1352 | 0 \| Global XYZ | -1.120 | -2.840 | -0.055 | 0.000 | 0.000 | 0.000 |
| 165 | 1353 | 0 \| Global XYZ | -1.117 | -2.311 | 0.025 | 0.000 | 0.000 | 0.000 |
| 166 | 1354 | 0 \| Global XYZ | -1.292 | -1.516 | 0.025 | 0.000 | 0.000 | 0.000 |
| 167 | 1355 | 0 \| Global XYZ | -1.292 | -1.863 | -0.042 | 0.000 | 0.000 | 0.000 |
| 168 | 1356 | 0 \| Global XYZ | -0.216 | -1.221 | 0.001 | 0.000 | 0.000 | 0.000 |
| 169 | 1357 | 0 \| Global XYZ | -0.214 | -0.993 | 0.011 | 0.000 | 0.000 | 0.000 |
| 170 | 1358 | 0 \| Global XYZ | -1.112 | -1.248 | -0.023 | 0.000 | 0.000 | 0.000 |
| 171 | 1359 | 0 \| Global XYZ | -0.988 | -0.636 | 0.056 | 0.000 | 0.000 | 0.000 |
| 172 | 1360 | 0 \| Global XYZ | -1.150 | -0.418 | 0.054 | 0.000 | 0.000 | 0.000 |
| 173 | 1361 | 0 \| Global XYZ | -1.291 | -0.819 | -0.009 | 0.000 | 0.000 | 0.000 |
| 174 | 1362 | 0 \| Global XYZ | -0.210 | -0.536 | -0.001 | 0.000 | 0.000 | 0.000 |
| 175 | 1363 | 0 \| Global XYZ | -0.185 | -0.272 | 0.011 | 0.000 | 0.000 | 0.000 |
| 176 | 1364 | 0 \| Global XYZ | -1.018 | 0.064 | -0.019 | 0.000 | 0.000 | 0.000 |
| 177 | 1365 | 0 \| Global XYZ | -0.865 | 0.097 | -0.072 | 0.000 | 0.000 | 0.000 |
| 178 | 1366 | 0 \| Global XYZ | -0.279 | -0.788 | -0.106 | 0.000 | 0.000 | 0.000 |
| 179 | 1367 | 0 \| Global XYZ | -0.159 | 0.041 | -0.003 | 0.000 | 0.000 | 0.000 |
| 180 | 1371 | 0 \| Global XYZ | -0.044 | 0.075 | 0.000 | 0.000 | 0.000 | 0.000 |
| 181 | 1372 | 0 \| Global XYZ | -0.015 | 0.029 | -0.001 | 0.000 | 0.000 | 0.000 |
| 182 | 1379 | 0 \| Global XYZ | -0.068 | -1.108 | 0.004 | 0.000 | 0.000 | 0.000 |
| 183 | 1396 | 0 \| Global XYZ | -0.279 | -0.720 | -0.096 | 0.000 | 0.000 | 0.000 |
| 184 | 1397 | 0 \| Global XYZ | -0.083 | 0.094 | 0.003 | 0.000 | 0.000 | 0.000 |
| 185 | 1398 | 0 \| Global XYZ | -0.279 | -0.583 | -0.074 | 0.000 | 0.000 | 0.000 |
| 186 | 1399 | 0 \| Global XYZ | -0.279 | -0.513 | -0.067 | 0.000 | 0.000 | 0.000 |
| 187 | 1400 | 0 \| Global XYZ | -0.279 | -0.375 | -0.048 | 0.000 | 0.000 | 0.000 |
| 188 | 1401 | 0 \| Global XYZ | -0.279 | -0.305 | -0.039 | 0.000 | 0.000 | 0.000 |
| 189 | 1402 | 0 \| Global XYZ | -0.279 | -0.165 | -0.020 | 0.000 | 0.000 | 0.000 |
| 190 | 1403 | 0 \| Global XYZ | -0.249 | -0.084 | -0.011 | 0.000 | 0.000 | 0.000 |
| 191 | 1404 | 0 \| Global XYZ | -0.212 | 0.012 | 0.000 | 0.000 | 0.000 | 0.000 |

## 3.1 NODAL LOADS - BY COMPONENTS - COORDINATE SYSTEM

LC11

| No. | On Nodes No. | Coordinate System | Force [kN] $P_X$ / $P_U$ | $P_Y$ / $P_V$ | $P_Z$ / $P_W$ | Moment [kNm] $M_X$ / $M_U$ | $M_Y$ / $M_V$ | $M_Z$ / $M_W$ |
|---|---|---|---|---|---|---|---|---|
| 192 | 1405 | 0 \| Global XYZ | -0.250 | -1.107 | -0.020 | 0.000 | 0.000 | 0.000 |
| 193 | 1410 | 0 \| Global XYZ | -0.064 | -0.429 | -0.002 | 0.000 | 0.000 | 0.000 |
| 194 | 1411 | 0 \| Global XYZ | -0.037 | -0.669 | 0.003 | 0.000 | 0.000 | 0.000 |
| 195 | 1412 | 0 \| Global XYZ | -0.025 | -0.007 | 0.000 | 0.000 | 0.000 | 0.000 |
| 196 | 1413 | 0 \| Global XYZ | -0.026 | -0.421 | 0.002 | 0.000 | 0.000 | 0.000 |
| 197 | 1414 | 0 \| Global XYZ | -0.013 | -0.137 | 0.001 | 0.000 | 0.000 | 0.000 |
| 198 | 1415 | 0 \| Global XYZ | -0.196 | -1.163 | -0.004 | 0.000 | 0.000 | 0.000 |
| 199 | 1416 | 0 \| Global XYZ | -0.196 | -0.854 | -0.005 | 0.000 | 0.000 | 0.000 |
| 200 | 1417 | 0 \| Global XYZ | -0.066 | -0.814 | 0.003 | 0.000 | 0.000 | 0.000 |
| 201 | 1418 | 0 \| Global XYZ | -0.197 | -0.521 | -0.002 | 0.000 | 0.000 | 0.000 |
| 202 | 1419 | 0 \| Global XYZ | -0.064 | -0.503 | 0.002 | 0.000 | 0.000 | 0.000 |
| 203 | 1420 | 0 \| Global XYZ | -0.197 | -0.181 | -0.010 | 0.000 | 0.000 | 0.000 |
| 204 | 1421 | 0 \| Global XYZ | -0.064 | -0.173 | 0.002 | 0.000 | 0.000 | 0.000 |
| 205 | 1422 | 0 \| Global XYZ | -0.030 | 0.031 | 0.009 | 0.000 | 0.000 | 0.000 |
| 206 | 1424 | 0 \| Global XYZ | -0.038 | 0.036 | 0.000 | 0.000 | 0.000 | 0.000 |
| 207 | 1425 | 0 \| Global XYZ | 0.011 | 0.045 | 0.001 | 0.000 | 0.000 | 0.000 |
| 208 | 1426 | 0 \| Global XYZ | -0.083 | 0.027 | -0.002 | 0.000 | 0.000 | 0.000 |
| 209 | 1427 | 0 \| Global XYZ | 0.007 | 0.044 | 0.000 | 0.000 | 0.000 | 0.000 |
| 210 | 1428 | 0 \| Global XYZ | 0.007 | 0.012 | 0.000 | 0.000 | 0.000 | 0.000 |
| 211 | 1431 | 0 \| Global XYZ | -0.009 | 0.003 | 0.000 | 0.000 | 0.000 | 0.000 |
| 212 | 1432 | 0 \| Global XYZ | -0.009 | 0.016 | 0.000 | 0.000 | 0.000 | 0.000 |

## 3.1 NODAL LOADS - BY COMPONENTS - COORDINATE SYSTEM

LC12

**LC12**
Ersatzlasten aus
Eigenform Nr. 4 - 1.17 Hz

| No. | On Nodes No. | Coordinate System | Force [kN] $P_X$ / $P_U$ | $P_Y$ / $P_V$ | $P_Z$ / $P_W$ | Moment [kNm] $M_X$ / $M_U$ | $M_Y$ / $M_V$ | $M_Z$ / $M_W$ |
|---|---|---|---|---|---|---|---|---|
| 1 | 30 | 0 \| Global XYZ | 0.176 | 0.130 | 0.000 | 0.000 | 0.000 | 0.000 |
| 2 | 31 | 0 \| Global XYZ | 0.258 | 0.229 | 0.009 | 0.000 | 0.000 | 0.000 |
| 3 | 32 | 0 \| Global XYZ | 0.040 | -0.010 | 0.000 | 0.000 | 0.000 | 0.000 |
| 4 | 33 | 0 \| Global XYZ | 0.435 | 0.482 | 0.032 | 0.000 | 0.000 | 0.000 |
| 5 | 34 | 0 \| Global XYZ | 0.110 | -0.031 | 0.000 | 0.000 | 0.000 | 0.000 |
| 6 | 35 | 0 \| Global XYZ | 0.110 | 0.018 | 0.000 | 0.000 | 0.000 | 0.000 |
| 7 | 36 | 0 \| Global XYZ | 0.110 | 0.067 | 0.000 | 0.000 | 0.000 | 0.000 |
| 8 | 37 | 0 \| Global XYZ | 0.039 | 0.051 | 0.002 | 0.000 | 0.000 | 0.000 |
| 9 | 38 | 0 \| Global XYZ | 0.055 | -0.139 | 0.007 | 0.000 | 0.000 | 0.000 |
| 10 | 39 | 0 \| Global XYZ | 0.060 | -0.159 | 0.007 | 0.000 | 0.000 | 0.000 |
| 11 | 40 | 0 \| Global XYZ | 0.071 | 0.084 | 0.004 | 0.000 | 0.000 | 0.000 |
| 12 | 41 | 0 \| Global XYZ | 0.164 | 0.062 | 0.000 | 0.000 | 0.000 | 0.000 |
| 13 | 42 | 0 \| Global XYZ | 0.164 | -0.007 | 0.000 | 0.000 | 0.000 | 0.000 |
| 14 | 43 | 0 \| Global XYZ | 0.164 | -0.087 | 0.000 | 0.000 | 0.000 | 0.000 |
| 15 | 44 | 0 \| Global XYZ | 0.092 | 0.082 | 0.001 | 0.000 | 0.000 | 0.000 |
| 16 | 45 | 0 \| Global XYZ | 0.379 | 0.383 | 0.027 | 0.000 | 0.000 | 0.000 |
| 17 | 46 | 0 \| Global XYZ | -0.052 | -1.734 | -0.002 | 0.000 | 0.000 | 0.000 |
| 18 | 47 | 0 \| Global XYZ | 0.856 | -2.227 | 0.005 | 0.000 | 0.000 | 0.000 |
| 19 | 48 | 0 \| Global XYZ | 0.740 | -2.170 | 0.006 | 0.000 | 0.000 | 0.000 |
| 20 | 49 | 0 \| Global XYZ | 0.800 | -2.208 | 0.007 | 0.000 | 0.000 | 0.000 |
| 21 | 50 | 0 \| Global XYZ | 0.822 | -2.213 | 0.008 | 0.000 | 0.000 | 0.000 |
| 22 | 51 | 0 \| Global XYZ | 0.055 | -0.072 | 0.000 | 0.000 | 0.000 | 0.000 |
| 23 | 52 | 0 \| Global XYZ | 0.565 | -0.488 | 0.002 | 0.000 | 0.000 | 0.000 |
| 24 | 53 | 0 \| Global XYZ | 0.238 | -0.228 | 0.002 | 0.000 | 0.000 | 0.000 |
| 25 | 54 | 0 \| Global XYZ | 0.256 | -0.287 | -0.006 | 0.000 | 0.000 | 0.000 |
| 26 | 55 | 0 \| Global XYZ | 0.176 | -0.163 | -0.001 | 0.000 | 0.000 | 0.000 |
| 27 | 56 | 0 \| Global XYZ | 0.033 | -0.022 | 0.000 | 0.000 | 0.000 | 0.000 |
| 28 | 57 | 0 \| Global XYZ | 0.268 | -0.205 | -0.004 | 0.000 | 0.000 | 0.000 |
| 29 | 58 | 0 \| Global XYZ | 0.871 | -0.399 | 0.002 | 0.000 | 0.000 | 0.000 |
| 30 | 59 | 0 \| Global XYZ | 0.238 | -0.084 | 0.002 | 0.000 | 0.000 | 0.000 |
| 31 | 60 | 0 \| Global XYZ | 0.256 | -0.106 | -0.002 | 0.000 | 0.000 | 0.000 |
| 32 | 61 | 0 \| Global XYZ | 0.176 | -0.060 | 0.000 | 0.000 | 0.000 | 0.000 |
| 33 | 63 | 0 \| Global XYZ | 0.033 | -0.002 | 0.000 | 0.000 | 0.000 | 0.000 |
| 34 | 64 | 0 \| Global XYZ | 0.046 | 0.060 | 0.017 | 0.000 | 0.000 | 0.000 |
| 35 | 65 | 0 \| Global XYZ | 0.269 | -0.017 | 0.000 | 0.000 | 0.000 | 0.000 |
| 36 | 66 | 0 \| Global XYZ | 0.870 | -0.046 | 0.000 | 0.000 | 0.000 | 0.000 |
| 37 | 68 | 0 \| Global XYZ | 0.238 | 0.050 | -0.004 | 0.000 | 0.000 | 0.000 |
| 38 | 74 | 0 \| Global XYZ | 0.019 | -0.047 | 0.000 | 0.000 | 0.000 | 0.000 |
| 39 | 78 | 0 \| Global XYZ | 0.590 | 0.428 | -0.010 | 0.000 | 0.000 | 0.000 |
| 40 | 79 | 0 \| Global XYZ | 0.500 | -1.445 | -0.011 | 0.000 | 0.000 | 0.000 |
| 41 | 80 | 0 \| Global XYZ | 0.536 | -0.537 | 0.003 | 0.000 | 0.000 | 0.000 |
| 42 | 81 | 0 \| Global XYZ | 0.011 | -0.051 | 0.000 | 0.000 | 0.000 | 0.000 |
| 43 | 82 | 0 \| Global XYZ | 0.495 | -1.448 | -0.010 | 0.000 | 0.000 | 0.000 |
| 44 | 83 | 0 \| Global XYZ | 0.007 | -0.058 | 0.000 | 0.000 | 0.000 | 0.000 |
| 45 | 84 | 0 \| Global XYZ | 0.480 | -1.467 | -0.009 | 0.000 | 0.000 | 0.000 |
| 46 | 85 | 0 \| Global XYZ | 0.260 | 0.317 | 0.016 | 0.000 | 0.000 | 0.000 |
| 47 | 86 | 0 \| Global XYZ | 0.624 | -0.327 | 0.002 | 0.000 | 0.000 | 0.000 |
| 48 | 87 | 0 \| Global XYZ | 0.238 | 0.182 | 0.017 | 0.000 | 0.000 | 0.000 |
| 49 | 89 | 0 \| Global XYZ | 0.866 | 0.303 | -0.001 | 0.000 | 0.000 | 0.000 |
| 50 | 92 | 0 \| Global XYZ | 0.012 | -0.068 | 0.000 | 0.000 | 0.000 | 0.000 |
| 51 | 93 | 0 \| Global XYZ | 0.564 | -1.505 | -0.007 | 0.000 | 0.000 | 0.000 |
| 52 | 94 | 0 \| Global XYZ | 0.184 | -0.224 | -0.001 | 0.000 | 0.000 | 0.000 |
| 53 | 95 | 0 \| Global XYZ | 0.356 | -0.227 | -0.001 | 0.000 | 0.000 | 0.000 |
| 54 | 96 | 0 \| Global XYZ | 0.630 | -0.026 | 0.000 | 0.000 | 0.000 | 0.000 |
| 55 | 97 | 0 \| Global XYZ | 0.358 | -0.018 | 0.000 | 0.000 | 0.000 | 0.000 |
| 56 | 98 | 0 \| Global XYZ | 0.598 | -0.265 | 0.014 | 0.000 | 0.000 | 0.000 |
| 57 | 99 | 0 \| Global XYZ | 0.630 | 0.238 | -0.001 | 0.000 | 0.000 | 0.000 |
| 58 | 100 | 0 \| Global XYZ | 0.358 | 0.164 | 0.001 | 0.000 | 0.000 | 0.000 |
| 59 | 101 | 0 \| Global XYZ | 0.643 | -0.554 | 0.032 | 0.000 | 0.000 | 0.000 |
| 60 | 102 | 0 \| Global XYZ | 0.609 | -0.021 | 0.001 | 0.000 | 0.000 | 0.000 |
| 61 | 103 | 0 \| Global XYZ | 0.036 | 0.005 | 0.000 | 0.000 | 0.000 | 0.000 |
| 62 | 104 | 0 \| Global XYZ | 0.647 | 0.551 | 0.001 | 0.000 | 0.000 | 0.000 |

## 3.1 NODAL LOADS - BY COMPONENTS - COORDINATE SYSTEM

LC12

| No. | On Nodes No. | Coordinate System | Force [kN] $P_X$ / $P_U$ | $P_Y$ / $P_V$ | $P_Z$ / $P_W$ | Moment [kNm] $M_X$ / $M_U$ | $M_Y$ / $M_V$ | $M_Z$ / $M_W$ |
|---|---|---|---|---|---|---|---|---|
| 63 | 105 | 0 \| Global XYZ | 0.613 | 0.191 | -0.010 | 0.000 | 0.000 | 0.000 |
| 64 | 106 | 0 \| Global XYZ | 0.326 | 0.336 | 0.005 | 0.000 | 0.000 | 0.000 |
| 65 | 107 | 0 \| Global XYZ | 0.706 | 0.497 | -0.027 | 0.000 | 0.000 | 0.000 |
| 66 | 108 | 0 \| Global XYZ | 0.043 | 0.005 | -0.001 | 0.000 | 0.000 | 0.000 |
| 67 | 109 | 0 \| Global XYZ | 0.033 | 0.016 | 0.000 | 0.000 | 0.000 | 0.000 |
| 68 | 110 | 0 \| Global XYZ | 0.270 | 0.148 | 0.003 | 0.000 | 0.000 | 0.000 |
| 69 | 111 | 0 \| Global XYZ | 0.040 | 0.006 | 0.000 | 0.000 | 0.000 | 0.000 |
| 70 | 112 | 0 \| Global XYZ | 0.040 | 0.022 | 0.000 | 0.000 | 0.000 | 0.000 |
| 71 | 113 | 0 \| Global XYZ | 0.176 | 0.036 | 0.000 | 0.000 | 0.000 | 0.000 |
| 72 | 114 | 0 \| Global XYZ | 0.257 | 0.063 | 0.000 | 0.000 | 0.000 | 0.000 |
| 73 | 214 | 0 \| Global XYZ | 0.194 | 0.196 | 0.003 | 0.000 | 0.000 | 0.000 |
| 74 | 270 | 0 \| Global XYZ | 0.198 | 0.090 | 0.000 | 0.000 | 0.000 | 0.000 |
| 75 | 271 | 0 \| Global XYZ | 0.198 | -0.010 | 0.000 | 0.000 | 0.000 | 0.000 |
| 76 | 272 | 0 \| Global XYZ | 0.198 | -0.125 | -0.001 | 0.000 | 0.000 | 0.000 |
| 77 | 273 | 0 \| Global XYZ | 0.140 | -0.169 | -0.001 | 0.000 | 0.000 | 0.000 |
| 78 | 274 | 0 \| Global XYZ | 0.911 | -0.935 | -0.005 | 0.000 | 0.000 | 0.000 |
| 79 | 275 | 0 \| Global XYZ | 0.070 | -0.103 | -0.013 | 0.000 | 0.000 | 0.000 |
| 80 | 276 | 0 \| Global XYZ | 1.529 | -0.832 | -0.003 | 0.000 | 0.000 | 0.000 |
| 81 | 277 | 0 \| Global XYZ | 0.131 | -0.102 | -0.013 | 0.000 | 0.000 | 0.000 |
| 82 | 278 | 0 \| Global XYZ | 1.528 | -0.096 | 0.000 | 0.000 | 0.000 | 0.000 |
| 83 | 279 | 0 \| Global XYZ | 0.008 | 0.006 | 0.000 | 0.000 | 0.000 | 0.000 |
| 84 | 281 | 0 \| Global XYZ | 0.131 | -0.012 | -0.001 | 0.000 | 0.000 | 0.000 |
| 85 | 282 | 0 \| Global XYZ | 1.523 | 0.636 | 0.002 | 0.000 | 0.000 | 0.000 |
| 86 | 283 | 0 \| Global XYZ | 0.131 | 0.078 | 0.009 | 0.000 | 0.000 | 0.000 |
| 87 | 284 | 0 \| Global XYZ | 0.418 | -0.578 | 0.000 | 0.000 | 0.000 | 0.000 |
| 88 | 285 | 0 \| Global XYZ | 0.731 | -0.536 | 0.000 | 0.000 | 0.000 | 0.000 |
| 89 | 286 | 0 \| Global XYZ | 0.730 | -0.061 | 0.000 | 0.000 | 0.000 | 0.000 |
| 90 | 287 | 0 \| Global XYZ | 0.730 | 0.410 | 0.000 | 0.000 | 0.000 | 0.000 |
| 91 | 289 | 0 \| Global XYZ | 0.092 | 0.113 | 0.019 | 0.000 | 0.000 | 0.000 |
| 92 | 290 | 0 \| Global XYZ | 0.562 | 0.646 | -0.001 | 0.000 | 0.000 | 0.000 |
| 93 | 291 | 0 \| Global XYZ | 0.006 | 0.007 | 0.000 | 0.000 | 0.000 | 0.000 |
| 94 | 292 | 0 \| Global XYZ | 0.018 | 0.023 | 0.003 | 0.000 | 0.000 | 0.000 |
| 95 | 302 | 0 \| Global XYZ | 0.012 | -0.011 | 0.000 | 0.000 | 0.000 | 0.000 |
| 96 | 303 | 0 \| Global XYZ | 0.012 | -0.006 | 0.000 | 0.000 | 0.000 | 0.000 |
| 97 | 304 | 0 \| Global XYZ | 0.012 | 0.000 | 0.000 | 0.000 | 0.000 | 0.000 |
| 98 | 305 | 0 \| Global XYZ | 0.012 | 0.004 | 0.000 | 0.000 | 0.000 | 0.000 |
| 99 | 342 | 0 \| Global XYZ | -0.045 | -1.414 | 0.000 | 0.000 | 0.000 | 0.000 |
| 100 | 974 | 0 \| Global XYZ | 0.305 | 0.451 | 0.001 | 0.000 | 0.000 | 0.000 |
| 101 | 975 | 0 \| Global XYZ | 1.113 | 0.957 | -0.017 | 0.000 | 0.000 | 0.000 |
| 102 | 1008 | 0 \| Global XYZ | 0.056 | 0.087 | 0.006 | 0.000 | 0.000 | 0.000 |
| 103 | 1011 | 0 \| Global XYZ | 0.139 | 0.099 | 0.001 | 0.000 | 0.000 | 0.000 |
| 104 | 1017 | 0 \| Global XYZ | 0.173 | 0.183 | 0.059 | 0.000 | 0.000 | 0.000 |
| 105 | 1082 | 0 \| Global XYZ | 0.237 | 0.249 | 0.026 | 0.000 | 0.000 | 0.000 |
| 106 | 1083 | 0 \| Global XYZ | 0.237 | 0.112 | 0.000 | 0.000 | 0.000 | 0.000 |
| 107 | 1084 | 0 \| Global XYZ | 0.237 | -0.013 | 0.000 | 0.000 | 0.000 | 0.000 |
| 108 | 1085 | 0 \| Global XYZ | 0.237 | -0.155 | 0.001 | 0.000 | 0.000 | 0.000 |
| 109 | 1086 | 0 \| Global XYZ | 0.127 | -0.158 | 0.001 | 0.000 | 0.000 | 0.000 |
| 110 | 1087 | 0 \| Global XYZ | -0.016 | -0.661 | 0.000 | 0.000 | 0.000 | 0.000 |
| 111 | 1125 | 0 \| Global XYZ | -0.075 | -2.329 | 0.000 | 0.000 | 0.000 | 0.000 |
| 112 | 1126 | 0 \| Global XYZ | 0.128 | 0.195 | 0.009 | 0.000 | 0.000 | 0.000 |
| 113 | 1127 | 0 \| Global XYZ | 0.089 | 0.112 | 0.005 | 0.000 | 0.000 | 0.000 |
| 114 | 1129 | 0 \| Global XYZ | 0.174 | 0.186 | 0.012 | 0.000 | 0.000 | 0.000 |
| 115 | 1130 | 0 \| Global XYZ | 0.093 | 0.109 | 0.016 | 0.000 | 0.000 | 0.000 |
| 116 | 1139 | 0 \| Global XYZ | -0.001 | -0.048 | 0.000 | 0.000 | 0.000 | 0.000 |
| 117 | 1142 | 0 \| Global XYZ | -0.021 | -0.745 | -0.001 | 0.000 | 0.000 | 0.000 |
| 118 | 1144 | 0 \| Global XYZ | 0.120 | 0.157 | 0.008 | 0.000 | 0.000 | 0.000 |
| 119 | 1290 | 0 \| Global XYZ | -0.062 | -1.913 | -0.001 | 0.000 | 0.000 | 0.000 |
| 120 | 1291 | 0 \| Global XYZ | -0.071 | -2.182 | -0.003 | 0.000 | 0.000 | 0.000 |
| 121 | 1303 | 0 \| Global XYZ | 0.497 | -0.996 | 0.050 | 0.000 | 0.000 | 0.000 |
| 122 | 1305 | 0 \| Global XYZ | 0.412 | -1.002 | 0.048 | 0.000 | 0.000 | 0.000 |
| 123 | 1306 | 0 \| Global XYZ | 1.035 | -2.420 | 0.107 | 0.000 | 0.000 | 0.000 |
| 124 | 1307 | 0 \| Global XYZ | 0.187 | -0.479 | 0.002 | 0.000 | 0.000 | 0.000 |
| 125 | 1308 | 0 \| Global XYZ | 0.985 | -2.384 | 0.103 | 0.000 | 0.000 | 0.000 |
| 126 | 1309 | 0 \| Global XYZ | 0.124 | -0.516 | 0.002 | 0.000 | 0.000 | 0.000 |
| 127 | 1311 | 0 \| Global XYZ | 0.336 | -1.025 | 0.040 | 0.000 | 0.000 | 0.000 |
| 128 | 1312 | 0 \| Global XYZ | 0.875 | -2.291 | 0.084 | 0.000 | 0.000 | 0.000 |
| 129 | 1313 | 0 \| Global XYZ | 0.088 | -0.571 | 0.001 | 0.000 | 0.000 | 0.000 |
| 130 | 1315 | 0 \| Global XYZ | 0.375 | -1.107 | 0.033 | 0.000 | 0.000 | 0.000 |
| 131 | 1316 | 0 \| Global XYZ | 0.965 | -2.345 | 0.069 | 0.000 | 0.000 | 0.000 |
| 132 | 1317 | 0 \| Global XYZ | 0.133 | -0.653 | 0.001 | 0.000 | 0.000 | 0.000 |
| 133 | 1320 | 0 \| Global XYZ | 0.435 | -0.240 | 0.032 | 0.000 | 0.000 | 0.000 |
| 134 | 1321 | 0 \| Global XYZ | 0.768 | -0.568 | 0.053 | 0.000 | 0.000 | 0.000 |
| 135 | 1322 | 0 \| Global XYZ | 0.139 | -0.128 | 0.001 | 0.000 | 0.000 | 0.000 |
| 136 | 1323 | 0 \| Global XYZ | 0.449 | -0.125 | 0.016 | 0.000 | 0.000 | 0.000 |
| 137 | 1324 | 0 \| Global XYZ | 0.768 | -0.288 | 0.026 | 0.000 | 0.000 | 0.000 |
| 138 | 1325 | 0 \| Global XYZ | 0.139 | -0.067 | 0.000 | 0.000 | 0.000 | 0.000 |
| 139 | 1326 | 0 \| Global XYZ | 0.460 | -0.010 | 0.003 | 0.000 | 0.000 | 0.000 |
| 140 | 1327 | 0 \| Global XYZ | 0.774 | -0.022 | 0.004 | 0.000 | 0.000 | 0.000 |
| 141 | 1328 | 0 \| Global XYZ | 0.138 | -0.005 | 0.000 | 0.000 | 0.000 | 0.000 |
| 142 | 1329 | 0 \| Global XYZ | 0.468 | 0.090 | -0.013 | 0.000 | 0.000 | 0.000 |
| 143 | 1330 | 0 \| Global XYZ | 0.785 | 0.204 | -0.019 | 0.000 | 0.000 | 0.000 |
| 144 | 1331 | 0 \| Global XYZ | 0.138 | 0.048 | 0.000 | 0.000 | 0.000 | 0.000 |
| 145 | 1332 | 0 \| Global XYZ | 0.582 | 0.241 | -0.014 | 0.000 | 0.000 | 0.000 |
| 146 | 1333 | 0 \| Global XYZ | 0.912 | 0.533 | -0.031 | 0.000 | 0.000 | 0.000 |
| 147 | 1335 | 0 \| Global XYZ | 0.118 | 0.089 | 0.000 | 0.000 | 0.000 | 0.000 |
| 148 | 1336 | 0 \| Global XYZ | 0.668 | -1.738 | 0.046 | 0.000 | 0.000 | 0.000 |
| 149 | 1337 | 0 \| Global XYZ | 0.650 | -1.726 | 0.044 | 0.000 | 0.000 | 0.000 |
| 150 | 1338 | 0 \| Global XYZ | 0.599 | -1.689 | 0.037 | 0.000 | 0.000 | 0.000 |
| 151 | 1339 | 0 \| Global XYZ | 0.682 | -1.720 | 0.030 | 0.000 | 0.000 | 0.000 |
| 152 | 1340 | 0 \| Global XYZ | 1.421 | -1.230 | 0.092 | 0.000 | 0.000 | 0.000 |
| 153 | 1341 | 0 \| Global XYZ | 1.421 | -1.002 | -0.020 | 0.000 | 0.000 | 0.000 |
| 154 | 1342 | 0 \| Global XYZ | 0.691 | -0.657 | 0.005 | 0.000 | 0.000 | 0.000 |

## 3.1 NODAL LOADS - BY COMPONENTS - COORDINATE SYSTEM

LC12

| No. | On Nodes No. | Coordinate System | Force [kN] $P_X$ / $P_U$ | $P_Y$ / $P_V$ | $P_Z$ / $P_W$ | Moment [kNm] $M_X$ / $M_U$ | $M_Y$ / $M_V$ | $M_Z$ / $M_W$ |
|---|---|---|---|---|---|---|---|---|
| 155 | 1343 | 0 \| Global XYZ | 1.422 | -0.545 | 0.036 | 0.000 | 0.000 | 0.000 |
| 156 | 1344 | 0 \| Global XYZ | 0.691 | -0.807 | 0.052 | 0.000 | 0.000 | 0.000 |
| 157 | 1345 | 0 \| Global XYZ | 0.726 | -0.529 | 0.055 | 0.000 | 0.000 | 0.000 |
| 158 | 1346 | 0 \| Global XYZ | 0.727 | -0.431 | -0.027 | 0.000 | 0.000 | 0.000 |
| 159 | 1347 | 0 \| Global XYZ | 1.421 | -0.317 | -0.055 | 0.000 | 0.000 | 0.000 |
| 160 | 1348 | 0 \| Global XYZ | 0.691 | -0.208 | -0.023 | 0.000 | 0.000 | 0.000 |
| 161 | 1349 | 0 \| Global XYZ | 0.691 | -0.357 | 0.010 | 0.000 | 0.000 | 0.000 |
| 162 | 1350 | 0 \| Global XYZ | 0.727 | -0.235 | 0.037 | 0.000 | 0.000 | 0.000 |
| 163 | 1351 | 0 \| Global XYZ | 0.727 | -0.137 | -0.035 | 0.000 | 0.000 | 0.000 |
| 164 | 1352 | 0 \| Global XYZ | 1.419 | 0.139 | 0.054 | 0.000 | 0.000 | 0.000 |
| 165 | 1353 | 0 \| Global XYZ | 1.418 | 0.365 | -0.038 | 0.000 | 0.000 | 0.000 |
| 166 | 1354 | 0 \| Global XYZ | 0.691 | 0.240 | -0.012 | 0.000 | 0.000 | 0.000 |
| 167 | 1355 | 0 \| Global XYZ | 0.691 | 0.091 | 0.022 | 0.000 | 0.000 | 0.000 |
| 168 | 1356 | 0 \| Global XYZ | 0.725 | 0.059 | 0.036 | 0.000 | 0.000 | 0.000 |
| 169 | 1357 | 0 \| Global XYZ | 0.724 | 0.156 | -0.037 | 0.000 | 0.000 | 0.000 |
| 170 | 1358 | 0 \| Global XYZ | 1.413 | 0.815 | 0.019 | 0.000 | 0.000 | 0.000 |
| 171 | 1359 | 0 \| Global XYZ | 1.256 | 0.924 | -0.076 | 0.000 | 0.000 | 0.000 |
| 172 | 1360 | 0 \| Global XYZ | 0.615 | 0.607 | -0.030 | 0.000 | 0.000 | 0.000 |
| 173 | 1361 | 0 \| Global XYZ | 0.691 | 0.535 | 0.003 | 0.000 | 0.000 | 0.000 |
| 174 | 1362 | 0 \| Global XYZ | 0.721 | 0.349 | 0.032 | 0.000 | 0.000 | 0.000 |
| 175 | 1363 | 0 \| Global XYZ | 0.638 | 0.396 | -0.032 | 0.000 | 0.000 | 0.000 |
| 176 | 1364 | 0 \| Global XYZ | 0.545 | 0.716 | 0.011 | 0.000 | 0.000 | 0.000 |
| 177 | 1365 | 0 \| Global XYZ | 1.099 | 1.081 | 0.097 | 0.000 | 0.000 | 0.000 |
| 178 | 1366 | 0 \| Global XYZ | 0.131 | -0.162 | -0.023 | 0.000 | 0.000 | 0.000 |
| 179 | 1367 | 0 \| Global XYZ | 0.549 | 0.456 | 0.027 | 0.000 | 0.000 | 0.000 |
| 180 | 1371 | 0 \| Global XYZ | 0.151 | 0.149 | 0.000 | 0.000 | 0.000 | 0.000 |
| 181 | 1372 | 0 \| Global XYZ | 0.052 | 0.052 | 0.002 | 0.000 | 0.000 | 0.000 |
| 182 | 1379 | 0 \| Global XYZ | 0.288 | -0.221 | 0.005 | 0.000 | 0.000 | 0.000 |
| 183 | 1396 | 0 \| Global XYZ | 0.131 | -0.132 | -0.019 | 0.000 | 0.000 | 0.000 |
| 184 | 1397 | 0 \| Global XYZ | 0.286 | 0.268 | -0.004 | 0.000 | 0.000 | 0.000 |
| 185 | 1398 | 0 \| Global XYZ | 0.131 | -0.072 | -0.008 | 0.000 | 0.000 | 0.000 |
| 186 | 1399 | 0 \| Global XYZ | 0.131 | -0.042 | -0.004 | 0.000 | 0.000 | 0.000 |
| 187 | 1400 | 0 \| Global XYZ | 0.131 | 0.018 | 0.001 | 0.000 | 0.000 | 0.000 |
| 188 | 1401 | 0 \| Global XYZ | 0.131 | 0.048 | 0.004 | 0.000 | 0.000 | 0.000 |
| 189 | 1402 | 0 \| Global XYZ | 0.131 | 0.108 | 0.020 | 0.000 | 0.000 | 0.000 |
| 190 | 1403 | 0 \| Global XYZ | 0.116 | 0.122 | 0.024 | 0.000 | 0.000 | 0.000 |
| 191 | 1404 | 0 \| Global XYZ | 0.099 | 0.139 | 0.016 | 0.000 | 0.000 | 0.000 |
| 192 | 1405 | 0 \| Global XYZ | 0.175 | -0.255 | -0.005 | 0.000 | 0.000 | 0.000 |
| 193 | 1410 | 0 \| Global XYZ | 0.081 | -0.099 | -0.001 | 0.000 | 0.000 | 0.000 |
| 194 | 1411 | 0 \| Global XYZ | 0.153 | -0.154 | 0.001 | 0.000 | 0.000 | 0.000 |
| 195 | 1412 | 0 \| Global XYZ | 0.110 | 0.094 | 0.000 | 0.000 | 0.000 | 0.000 |
| 196 | 1413 | 0 \| Global XYZ | 0.110 | -0.084 | 0.002 | 0.000 | 0.000 | 0.000 |
| 197 | 1414 | 0 \| Global XYZ | 0.040 | -0.027 | 0.001 | 0.000 | 0.000 | 0.000 |
| 198 | 1415 | 0 \| Global XYZ | 0.249 | -0.231 | -0.001 | 0.000 | 0.000 | 0.000 |
| 199 | 1416 | 0 \| Global XYZ | 0.249 | -0.085 | 0.001 | 0.000 | 0.000 | 0.000 |
| 200 | 1417 | 0 \| Global XYZ | 0.288 | -0.081 | 0.000 | 0.000 | 0.000 | 0.000 |
| 201 | 1418 | 0 \| Global XYZ | 0.249 | 0.051 | 0.000 | 0.000 | 0.000 | 0.000 |
| 202 | 1419 | 0 \| Global XYZ | 0.290 | 0.049 | 0.000 | 0.000 | 0.000 | 0.000 |
| 203 | 1420 | 0 \| Global XYZ | 0.249 | 0.185 | 0.016 | 0.000 | 0.000 | 0.000 |
| 204 | 1421 | 0 \| Global XYZ | 0.287 | 0.177 | -0.001 | 0.000 | 0.000 | 0.000 |
| 205 | 1422 | 0 \| Global XYZ | 0.051 | 0.056 | 0.023 | 0.000 | 0.000 | 0.000 |
| 206 | 1424 | 0 \| Global XYZ | 0.172 | 0.167 | 0.006 | 0.000 | 0.000 | 0.000 |
| 207 | 1425 | 0 \| Global XYZ | 0.112 | 0.106 | 0.001 | 0.000 | 0.000 | 0.000 |
| 208 | 1426 | 0 \| Global XYZ | 0.105 | 0.124 | 0.003 | 0.000 | 0.000 | 0.000 |
| 209 | 1427 | 0 \| Global XYZ | 0.069 | 0.073 | 0.000 | 0.000 | 0.000 | 0.000 |
| 210 | 1428 | 0 \| Global XYZ | 0.068 | 0.058 | 0.000 | 0.000 | 0.000 | 0.000 |
| 211 | 1431 | 0 \| Global XYZ | 0.033 | 0.028 | 0.001 | 0.000 | 0.000 | 0.000 |
| 212 | 1432 | 0 \| Global XYZ | 0.033 | 0.030 | 0.000 | 0.000 | 0.000 | 0.000 |

## 3.1 NODAL LOADS - BY COMPONENTS - COORDINATE SYSTEM

LC13

**LC13**
Ersatzlasten aus
Eigenform Nr. 5 - 1.40 Hz

| No. | On Nodes No. | Coordinate System | Force [kN] $P_X$ / $P_U$ | $P_Y$ / $P_V$ | $P_Z$ / $P_W$ | Moment [kNm] $M_X$ / $M_U$ | $M_Y$ / $M_V$ | $M_Z$ / $M_W$ |
|---|---|---|---|---|---|---|---|---|
| 1 | 30 | 0 \| Global XYZ | 0.001 | 0.000 | 0.000 | 0.000 | 0.000 | 0.000 |
| 2 | 31 | 0 \| Global XYZ | 0.002 | 0.001 | 0.000 | 0.000 | 0.000 | 0.000 |
| 3 | 32 | 0 \| Global XYZ | 0.000 | 0.000 | 0.000 | 0.000 | 0.000 | 0.000 |
| 4 | 33 | 0 \| Global XYZ | 0.003 | 0.001 | 0.000 | 0.000 | 0.000 | 0.000 |
| 5 | 34 | 0 \| Global XYZ | 0.001 | 0.000 | 0.000 | 0.000 | 0.000 | 0.000 |
| 6 | 35 | 0 \| Global XYZ | 0.001 | 0.000 | 0.000 | 0.000 | 0.000 | 0.000 |
| 7 | 36 | 0 \| Global XYZ | 0.001 | 0.000 | 0.000 | 0.000 | 0.000 | 0.000 |
| 8 | 37 | 0 \| Global XYZ | 0.000 | 0.000 | 0.000 | 0.000 | 0.000 | 0.000 |
| 9 | 38 | 0 \| Global XYZ | -0.005 | 0.001 | 0.000 | 0.000 | 0.000 | 0.000 |
| 10 | 39 | 0 \| Global XYZ | -0.005 | 0.001 | 0.000 | 0.000 | 0.000 | 0.000 |
| 11 | 40 | 0 \| Global XYZ | 0.000 | 0.000 | 0.000 | 0.000 | 0.000 | 0.000 |
| 12 | 41 | 0 \| Global XYZ | 0.001 | 0.000 | 0.000 | 0.000 | 0.000 | 0.000 |
| 13 | 42 | 0 \| Global XYZ | 0.001 | 0.000 | 0.000 | 0.000 | 0.000 | 0.000 |
| 14 | 43 | 0 \| Global XYZ | 0.001 | 0.000 | 0.000 | 0.000 | 0.000 | 0.000 |
| 15 | 44 | 0 \| Global XYZ | 0.001 | 0.000 | 0.000 | 0.000 | 0.000 | 0.000 |
| 16 | 45 | 0 \| Global XYZ | 0.003 | 0.001 | 0.000 | 0.000 | 0.000 | 0.000 |
| 17 | 46 | 0 \| Global XYZ | 1.428 | 0.068 | 0.066 | 0.000 | 0.000 | 0.000 |
| 18 | 47 | 0 \| Global XYZ | -0.071 | 0.016 | 0.000 | 0.000 | 0.000 | 0.000 |
| 19 | 48 | 0 \| Global XYZ | -0.073 | 0.017 | 0.000 | 0.000 | 0.000 | 0.000 |
| 20 | 49 | 0 \| Global XYZ | -0.002 | -0.054 | 0.000 | 0.000 | 0.000 | 0.000 |
| 21 | 50 | 0 \| Global XYZ | 0.016 | -0.089 | 0.000 | 0.000 | 0.000 | 0.000 |
| 22 | 51 | 0 \| Global XYZ | 0.001 | 0.000 | 0.000 | 0.000 | 0.000 | 0.000 |
| 23 | 52 | 0 \| Global XYZ | 0.004 | 0.000 | 0.000 | 0.000 | 0.000 | 0.000 |
| 24 | 53 | 0 \| Global XYZ | 0.002 | 0.000 | 0.000 | 0.000 | 0.000 | 0.000 |
| 25 | 54 | 0 \| Global XYZ | 0.002 | 0.000 | 0.000 | 0.000 | 0.000 | 0.000 |

## 3.1 NODAL LOADS - BY COMPONENTS - COORDINATE SYSTEM

LC13

| No. | On Nodes No. | Coordinate System | Force [kN] $P_X$ / $P_U$ | $P_Y$ / $P_V$ | $P_Z$ / $P_W$ | Moment [kNm] $M_X$ / $M_U$ | $M_Y$ / $M_V$ | $M_Z$ / $M_W$ |
|---|---|---|---|---|---|---|---|---|
| 26 | 55 | 0 \| Global XYZ | 0.001 | 0.000 | 0.000 | 0.000 | 0.000 | 0.000 |
| 27 | 56 | 0 \| Global XYZ | 0.000 | 0.000 | 0.000 | 0.000 | 0.000 | 0.000 |
| 28 | 57 | 0 \| Global XYZ | 0.002 | 0.000 | 0.000 | 0.000 | 0.000 | 0.000 |
| 29 | 58 | 0 \| Global XYZ | 0.005 | 0.000 | 0.000 | 0.000 | 0.000 | 0.000 |
| 30 | 59 | 0 \| Global XYZ | 0.002 | 0.000 | 0.000 | 0.000 | 0.000 | 0.000 |
| 31 | 60 | 0 \| Global XYZ | 0.002 | 0.000 | 0.000 | 0.000 | 0.000 | 0.000 |
| 32 | 61 | 0 \| Global XYZ | 0.001 | 0.000 | 0.000 | 0.000 | 0.000 | 0.000 |
| 33 | 63 | 0 \| Global XYZ | 0.000 | 0.000 | 0.000 | 0.000 | 0.000 | 0.000 |
| 34 | 64 | 0 \| Global XYZ | 0.000 | 0.000 | 0.000 | 0.000 | 0.000 | 0.000 |
| 35 | 65 | 0 \| Global XYZ | 0.002 | 0.000 | 0.000 | 0.000 | 0.000 | 0.000 |
| 36 | 66 | 0 \| Global XYZ | 0.005 | 0.001 | 0.000 | 0.000 | 0.000 | 0.000 |
| 37 | 68 | 0 \| Global XYZ | 0.002 | 0.000 | 0.000 | 0.000 | 0.000 | 0.000 |
| 38 | 74 | 0 \| Global XYZ | 0.000 | -0.002 | 0.000 | 0.000 | 0.000 | 0.000 |
| 39 | 78 | 0 \| Global XYZ | 0.004 | 0.001 | 0.000 | 0.000 | 0.000 | 0.000 |
| 40 | 79 | 0 \| Global XYZ | 0.010 | -0.058 | 0.000 | 0.000 | 0.000 | 0.000 |
| 41 | 80 | 0 \| Global XYZ | 0.003 | -0.001 | 0.000 | 0.000 | 0.000 | 0.000 |
| 42 | 81 | 0 \| Global XYZ | 0.000 | -0.001 | 0.000 | 0.000 | 0.000 | 0.000 |
| 43 | 82 | 0 \| Global XYZ | -0.001 | -0.035 | 0.000 | 0.000 | 0.000 | 0.000 |
| 44 | 83 | 0 \| Global XYZ | -0.002 | 0.000 | 0.000 | 0.000 | 0.000 | 0.000 |
| 45 | 84 | 0 \| Global XYZ | -0.049 | 0.011 | 0.000 | 0.000 | 0.000 | 0.000 |
| 46 | 85 | 0 \| Global XYZ | 0.002 | 0.001 | 0.000 | 0.000 | 0.000 | 0.000 |
| 47 | 86 | 0 \| Global XYZ | 0.003 | 0.000 | 0.000 | 0.000 | 0.000 | 0.000 |
| 48 | 87 | 0 \| Global XYZ | 0.002 | 0.001 | 0.000 | 0.000 | 0.000 | 0.000 |
| 49 | 89 | 0 \| Global XYZ | 0.005 | 0.001 | 0.000 | 0.000 | 0.000 | 0.000 |
| 50 | 92 | 0 \| Global XYZ | -0.002 | 0.000 | 0.000 | 0.000 | 0.000 | 0.000 |
| 51 | 93 | 0 \| Global XYZ | -0.047 | 0.010 | 0.000 | 0.000 | 0.000 | 0.000 |
| 52 | 94 | 0 \| Global XYZ | 0.001 | 0.000 | 0.000 | 0.000 | 0.000 | 0.000 |
| 53 | 95 | 0 \| Global XYZ | 0.002 | 0.000 | 0.000 | 0.000 | 0.000 | 0.000 |
| 54 | 96 | 0 \| Global XYZ | 0.003 | 0.001 | 0.000 | 0.000 | 0.000 | 0.000 |
| 55 | 97 | 0 \| Global XYZ | 0.002 | 0.000 | 0.000 | 0.000 | 0.000 | 0.000 |
| 56 | 98 | 0 \| Global XYZ | 0.003 | 0.000 | 0.000 | 0.000 | 0.000 | 0.000 |
| 57 | 99 | 0 \| Global XYZ | 0.003 | 0.001 | 0.000 | 0.000 | 0.000 | 0.000 |
| 58 | 100 | 0 \| Global XYZ | 0.002 | 0.001 | 0.000 | 0.000 | 0.000 | 0.000 |
| 59 | 101 | 0 \| Global XYZ | 0.003 | -0.001 | 0.000 | 0.000 | 0.000 | 0.000 |
| 60 | 102 | 0 \| Global XYZ | 0.003 | 0.000 | 0.000 | 0.000 | 0.000 | 0.000 |
| 61 | 103 | 0 \| Global XYZ | 0.000 | 0.000 | 0.000 | 0.000 | 0.000 | 0.000 |
| 62 | 104 | 0 \| Global XYZ | 0.003 | 0.002 | 0.000 | 0.000 | 0.000 | 0.000 |
| 63 | 105 | 0 \| Global XYZ | 0.003 | 0.001 | 0.000 | 0.000 | 0.000 | 0.000 |
| 64 | 106 | 0 \| Global XYZ | 0.002 | 0.001 | 0.000 | 0.000 | 0.000 | 0.000 |
| 65 | 107 | 0 \| Global XYZ | 0.003 | 0.001 | 0.000 | 0.000 | 0.000 | 0.000 |
| 66 | 108 | 0 \| Global XYZ | 0.000 | 0.000 | 0.000 | 0.000 | 0.000 | 0.000 |
| 67 | 109 | 0 \| Global XYZ | 0.000 | 0.000 | 0.000 | 0.000 | 0.000 | 0.000 |
| 68 | 110 | 0 \| Global XYZ | 0.002 | 0.001 | 0.000 | 0.000 | 0.000 | 0.000 |
| 69 | 111 | 0 \| Global XYZ | 0.000 | 0.000 | 0.000 | 0.000 | 0.000 | 0.000 |
| 70 | 112 | 0 \| Global XYZ | 0.000 | 0.000 | 0.000 | 0.000 | 0.000 | 0.000 |
| 71 | 113 | 0 \| Global XYZ | 0.001 | 0.000 | 0.000 | 0.000 | 0.000 | 0.000 |
| 72 | 114 | 0 \| Global XYZ | 0.002 | 0.000 | 0.000 | 0.000 | 0.000 | 0.000 |
| 73 | 214 | 0 \| Global XYZ | 0.001 | 0.001 | 0.000 | 0.000 | 0.000 | 0.000 |
| 74 | 270 | 0 \| Global XYZ | 0.001 | 0.000 | 0.000 | 0.000 | 0.000 | 0.000 |
| 75 | 271 | 0 \| Global XYZ | 0.001 | 0.000 | 0.000 | 0.000 | 0.000 | 0.000 |
| 76 | 272 | 0 \| Global XYZ | 0.001 | 0.000 | 0.000 | 0.000 | 0.000 | 0.000 |
| 77 | 273 | 0 \| Global XYZ | 0.001 | 0.000 | 0.000 | 0.000 | 0.000 | 0.000 |
| 78 | 274 | 0 \| Global XYZ | 0.006 | -0.001 | 0.000 | 0.000 | 0.000 | 0.000 |
| 79 | 275 | 0 \| Global XYZ | 0.001 | 0.000 | 0.000 | 0.000 | 0.000 | 0.000 |
| 80 | 276 | 0 \| Global XYZ | 0.011 | 0.000 | 0.000 | 0.000 | 0.000 | 0.000 |
| 81 | 277 | 0 \| Global XYZ | 0.001 | 0.000 | 0.000 | 0.000 | 0.000 | 0.000 |
| 82 | 278 | 0 \| Global XYZ | 0.011 | 0.001 | 0.000 | 0.000 | 0.000 | 0.000 |
| 83 | 279 | 0 \| Global XYZ | 0.000 | 0.000 | 0.000 | 0.000 | 0.000 | 0.000 |
| 84 | 281 | 0 \| Global XYZ | 0.001 | 0.000 | 0.000 | 0.000 | 0.000 | 0.000 |
| 85 | 282 | 0 \| Global XYZ | 0.011 | 0.003 | 0.000 | 0.000 | 0.000 | 0.000 |
| 86 | 283 | 0 \| Global XYZ | 0.001 | 0.000 | 0.000 | 0.000 | 0.000 | 0.000 |
| 87 | 284 | 0 \| Global XYZ | 0.004 | -0.001 | 0.000 | 0.000 | 0.000 | 0.000 |
| 88 | 285 | 0 \| Global XYZ | 0.006 | 0.000 | 0.000 | 0.000 | 0.000 | 0.000 |
| 89 | 286 | 0 \| Global XYZ | 0.006 | 0.001 | 0.000 | 0.000 | 0.000 | 0.000 |
| 90 | 287 | 0 \| Global XYZ | 0.006 | 0.002 | 0.000 | 0.000 | 0.000 | 0.000 |
| 91 | 289 | 0 \| Global XYZ | 0.001 | 0.000 | 0.000 | 0.000 | 0.000 | 0.000 |
| 92 | 290 | 0 \| Global XYZ | 0.005 | 0.002 | 0.000 | 0.000 | 0.000 | 0.000 |
| 93 | 291 | 0 \| Global XYZ | 0.000 | 0.000 | 0.000 | 0.000 | 0.000 | 0.000 |
| 94 | 292 | 0 \| Global XYZ | 0.000 | 0.000 | 0.000 | 0.000 | 0.000 | 0.000 |
| 95 | 302 | 0 \| Global XYZ | 0.000 | 0.000 | 0.000 | 0.000 | 0.000 | 0.000 |
| 96 | 303 | 0 \| Global XYZ | 0.000 | 0.000 | 0.000 | 0.000 | 0.000 | 0.000 |
| 97 | 304 | 0 \| Global XYZ | 0.000 | 0.000 | 0.000 | 0.000 | 0.000 | 0.000 |
| 98 | 305 | 0 \| Global XYZ | 0.000 | 0.000 | 0.000 | 0.000 | 0.000 | 0.000 |
| 99 | 342 | 0 \| Global XYZ | 1.271 | -0.043 | -0.007 | 0.000 | 0.000 | 0.000 |
| 100 | 974 | 0 \| Global XYZ | 0.003 | 0.001 | 0.000 | 0.000 | 0.000 | 0.000 |
| 101 | 975 | 0 \| Global XYZ | 0.008 | 0.003 | 0.000 | 0.000 | 0.000 | 0.000 |
| 102 | 1008 | 0 \| Global XYZ | 0.001 | 0.000 | 0.000 | 0.000 | 0.000 | 0.000 |
| 103 | 1011 | 0 \| Global XYZ | 0.001 | 0.000 | 0.000 | 0.000 | 0.000 | 0.000 |
| 104 | 1017 | 0 \| Global XYZ | 0.001 | 0.000 | 0.000 | 0.000 | 0.000 | 0.000 |
| 105 | 1082 | 0 \| Global XYZ | 0.002 | 0.001 | 0.000 | 0.000 | 0.000 | 0.000 |
| 106 | 1083 | 0 \| Global XYZ | 0.002 | 0.000 | 0.000 | 0.000 | 0.000 | 0.000 |
| 107 | 1084 | 0 \| Global XYZ | 0.002 | 0.000 | 0.000 | 0.000 | 0.000 | 0.000 |
| 108 | 1085 | 0 \| Global XYZ | 0.002 | 0.000 | 0.000 | 0.000 | 0.000 | 0.000 |
| 109 | 1086 | 0 \| Global XYZ | 0.001 | 0.000 | 0.000 | 0.000 | 0.000 | 0.000 |
| 110 | 1087 | 0 \| Global XYZ | 0.406 | -0.010 | 0.001 | 0.000 | 0.000 | 0.000 |
| 111 | 1125 | 0 \| Global XYZ | 2.136 | -0.041 | 0.004 | 0.000 | 0.000 | 0.000 |
| 112 | 1126 | 0 \| Global XYZ | 0.001 | 0.001 | 0.000 | 0.000 | 0.000 | 0.000 |
| 113 | 1127 | 0 \| Global XYZ | 0.001 | 0.000 | 0.000 | 0.000 | 0.000 | 0.000 |
| 114 | 1129 | 0 \| Global XYZ | 0.001 | 0.001 | 0.000 | 0.000 | 0.000 | 0.000 |
| 115 | 1130 | 0 \| Global XYZ | 0.000 | 0.000 | 0.000 | 0.000 | 0.000 | 0.000 |
| 116 | 1139 | 0 \| Global XYZ | 0.027 | -0.001 | 0.000 | 0.000 | 0.000 | 0.000 |
| 117 | 1142 | 0 \| Global XYZ | 0.551 | 0.040 | 0.022 | 0.000 | 0.000 | 0.000 |

## 3.1 NODAL LOADS - BY COMPONENTS - COORDINATE SYSTEM

LC13

| No. | On Nodes No. | Coordinate System | Force [kN] $P_X$ / $P_U$ | $P_Y$ / $P_V$ | $P_Z$ / $P_W$ | Moment [kNm] $M_X$ / $M_U$ | $M_Y$ / $M_V$ | $M_Z$ / $M_W$ |
|---|---|---|---|---|---|---|---|---|
| 118 | 1144 | 0 \| Global XYZ | 0.001 | 0.000 | 0.000 | 0.000 | 0.000 | 0.000 |
| 119 | 1290 | 0 \| Global XYZ | 1.766 | -0.020 | 0.049 | 0.000 | 0.000 | 0.000 |
| 120 | 1291 | 0 \| Global XYZ | 2.015 | 0.038 | 0.103 | 0.000 | 0.000 | 0.000 |
| 121 | 1303 | 0 \| Global XYZ | 0.007 | -0.042 | 0.002 | 0.000 | 0.000 | 0.000 |
| 122 | 1305 | 0 \| Global XYZ | -0.003 | -0.027 | 0.001 | 0.000 | 0.000 | 0.000 |
| 123 | 1306 | 0 \| Global XYZ | 0.019 | -0.098 | 0.004 | 0.000 | 0.000 | 0.000 |
| 124 | 1307 | 0 \| Global XYZ | 0.002 | -0.020 | 0.000 | 0.000 | 0.000 | 0.000 |
| 125 | 1308 | 0 \| Global XYZ | -0.001 | -0.059 | 0.002 | 0.000 | 0.000 | 0.000 |
| 126 | 1309 | 0 \| Global XYZ | -0.003 | -0.014 | 0.000 | 0.000 | 0.000 | 0.000 |
| 127 | 1311 | 0 \| Global XYZ | -0.035 | 0.006 | -0.002 | 0.000 | 0.000 | 0.000 |
| 128 | 1312 | 0 \| Global XYZ | -0.079 | 0.020 | -0.003 | 0.000 | 0.000 | 0.000 |
| 129 | 1313 | 0 \| Global XYZ | -0.018 | 0.001 | 0.000 | 0.000 | 0.000 | 0.000 |
| 130 | 1315 | 0 \| Global XYZ | -0.032 | 0.009 | -0.002 | 0.000 | 0.000 | 0.000 |
| 131 | 1316 | 0 \| Global XYZ | -0.076 | 0.020 | -0.003 | 0.000 | 0.000 | 0.000 |
| 132 | 1317 | 0 \| Global XYZ | -0.016 | 0.003 | 0.000 | 0.000 | 0.000 | 0.000 |
| 133 | 1320 | 0 \| Global XYZ | 0.002 | 0.000 | 0.000 | 0.000 | 0.000 | 0.000 |
| 134 | 1321 | 0 \| Global XYZ | 0.003 | -0.001 | 0.000 | 0.000 | 0.000 | 0.000 |
| 135 | 1322 | 0 \| Global XYZ | 0.001 | 0.000 | 0.000 | 0.000 | 0.000 | 0.000 |
| 136 | 1323 | 0 \| Global XYZ | 0.002 | 0.000 | 0.000 | 0.000 | 0.000 | 0.000 |
| 137 | 1324 | 0 \| Global XYZ | 0.003 | 0.000 | 0.000 | 0.000 | 0.000 | 0.000 |
| 138 | 1325 | 0 \| Global XYZ | 0.001 | 0.000 | 0.000 | 0.000 | 0.000 | 0.000 |
| 139 | 1326 | 0 \| Global XYZ | 0.002 | 0.000 | 0.000 | 0.000 | 0.000 | 0.000 |
| 140 | 1327 | 0 \| Global XYZ | 0.003 | 0.000 | 0.000 | 0.000 | 0.000 | 0.000 |
| 141 | 1328 | 0 \| Global XYZ | 0.001 | 0.000 | 0.000 | 0.000 | 0.000 | 0.000 |
| 142 | 1329 | 0 \| Global XYZ | 0.002 | 0.000 | 0.000 | 0.000 | 0.000 | 0.000 |
| 143 | 1330 | 0 \| Global XYZ | 0.003 | 0.001 | 0.000 | 0.000 | 0.000 | 0.000 |
| 144 | 1331 | 0 \| Global XYZ | 0.001 | 0.000 | 0.000 | 0.000 | 0.000 | 0.000 |
| 145 | 1332 | 0 \| Global XYZ | 0.002 | 0.001 | 0.000 | 0.000 | 0.000 | 0.000 |
| 146 | 1333 | 0 \| Global XYZ | 0.004 | 0.002 | 0.000 | 0.000 | 0.000 | 0.000 |
| 147 | 1335 | 0 \| Global XYZ | 0.001 | 0.000 | 0.000 | 0.000 | 0.000 | 0.000 |
| 148 | 1336 | 0 \| Global XYZ | 0.013 | -0.070 | 0.002 | 0.000 | 0.000 | 0.000 |
| 149 | 1337 | 0 \| Global XYZ | -0.001 | -0.043 | 0.001 | 0.000 | 0.000 | 0.000 |
| 150 | 1338 | 0 \| Global XYZ | -0.057 | 0.014 | -0.001 | 0.000 | 0.000 | 0.000 |
| 151 | 1339 | 0 \| Global XYZ | -0.055 | 0.013 | -0.001 | 0.000 | 0.000 | 0.000 |
| 152 | 1340 | 0 \| Global XYZ | 0.010 | -0.001 | 0.000 | 0.000 | 0.000 | 0.000 |
| 153 | 1341 | 0 \| Global XYZ | 0.010 | -0.001 | 0.000 | 0.000 | 0.000 | 0.000 |
| 154 | 1342 | 0 \| Global XYZ | 0.006 | 0.000 | 0.000 | 0.000 | 0.000 | 0.000 |
| 155 | 1343 | 0 \| Global XYZ | 0.010 | 0.000 | 0.000 | 0.000 | 0.000 | 0.000 |
| 156 | 1344 | 0 \| Global XYZ | 0.006 | -0.001 | 0.001 | 0.000 | 0.000 | 0.000 |
| 157 | 1345 | 0 \| Global XYZ | 0.005 | 0.000 | 0.000 | 0.000 | 0.000 | 0.000 |
| 158 | 1346 | 0 \| Global XYZ | 0.005 | 0.000 | 0.000 | 0.000 | 0.000 | 0.000 |
| 159 | 1347 | 0 \| Global XYZ | 0.010 | 0.001 | 0.000 | 0.000 | 0.000 | 0.000 |
| 160 | 1348 | 0 \| Global XYZ | 0.006 | 0.001 | 0.000 | 0.000 | 0.000 | 0.000 |
| 161 | 1349 | 0 \| Global XYZ | 0.006 | 0.000 | 0.000 | 0.000 | 0.000 | 0.000 |
| 162 | 1350 | 0 \| Global XYZ | 0.005 | 0.000 | 0.000 | 0.000 | 0.000 | 0.000 |
| 163 | 1351 | 0 \| Global XYZ | 0.005 | 0.000 | 0.000 | 0.000 | 0.000 | 0.000 |
| 164 | 1352 | 0 \| Global XYZ | 0.010 | 0.002 | 0.000 | 0.000 | 0.000 | 0.000 |
| 165 | 1353 | 0 \| Global XYZ | 0.010 | 0.002 | 0.000 | 0.000 | 0.000 | 0.000 |
| 166 | 1354 | 0 \| Global XYZ | 0.006 | 0.001 | 0.000 | 0.000 | 0.000 | 0.000 |
| 167 | 1355 | 0 \| Global XYZ | 0.006 | 0.001 | 0.000 | 0.000 | 0.000 | 0.000 |
| 168 | 1356 | 0 \| Global XYZ | 0.005 | 0.001 | 0.000 | 0.000 | 0.000 | 0.000 |
| 169 | 1357 | 0 \| Global XYZ | 0.005 | 0.001 | 0.000 | 0.000 | 0.000 | 0.000 |
| 170 | 1358 | 0 \| Global XYZ | 0.010 | 0.003 | 0.000 | 0.000 | 0.000 | 0.000 |
| 171 | 1359 | 0 \| Global XYZ | 0.009 | 0.003 | -0.001 | 0.000 | 0.000 | 0.000 |
| 172 | 1360 | 0 \| Global XYZ | 0.005 | 0.002 | 0.000 | 0.000 | 0.000 | 0.000 |
| 173 | 1361 | 0 \| Global XYZ | 0.006 | 0.002 | 0.000 | 0.000 | 0.000 | 0.000 |
| 174 | 1362 | 0 \| Global XYZ | 0.004 | 0.001 | 0.000 | 0.000 | 0.000 | 0.000 |
| 175 | 1363 | 0 \| Global XYZ | 0.004 | 0.001 | 0.000 | 0.000 | 0.000 | 0.000 |
| 176 | 1364 | 0 \| Global XYZ | 0.005 | 0.002 | 0.000 | 0.000 | 0.000 | 0.000 |
| 177 | 1365 | 0 \| Global XYZ | 0.008 | 0.003 | 0.000 | 0.000 | 0.000 | 0.000 |
| 178 | 1366 | 0 \| Global XYZ | 0.001 | 0.000 | 0.000 | 0.000 | 0.000 | 0.000 |
| 179 | 1367 | 0 \| Global XYZ | 0.003 | 0.001 | 0.000 | 0.000 | 0.000 | 0.000 |
| 180 | 1371 | 0 \| Global XYZ | 0.001 | 0.000 | 0.000 | 0.000 | 0.000 | 0.000 |
| 181 | 1372 | 0 \| Global XYZ | 0.000 | 0.000 | 0.000 | 0.000 | 0.000 | 0.000 |
| 182 | 1379 | 0 \| Global XYZ | 0.001 | 0.000 | 0.000 | 0.000 | 0.000 | 0.000 |
| 183 | 1396 | 0 \| Global XYZ | 0.001 | 0.000 | 0.000 | 0.000 | 0.000 | 0.000 |
| 184 | 1397 | 0 \| Global XYZ | 0.002 | 0.001 | 0.000 | 0.000 | 0.000 | 0.000 |
| 185 | 1398 | 0 \| Global XYZ | 0.001 | 0.000 | 0.000 | 0.000 | 0.000 | 0.000 |
| 186 | 1399 | 0 \| Global XYZ | 0.001 | 0.000 | 0.000 | 0.000 | 0.000 | 0.000 |
| 187 | 1400 | 0 \| Global XYZ | 0.001 | 0.000 | 0.000 | 0.000 | 0.000 | 0.000 |
| 188 | 1401 | 0 \| Global XYZ | 0.001 | 0.000 | 0.000 | 0.000 | 0.000 | 0.000 |
| 189 | 1402 | 0 \| Global XYZ | 0.001 | 0.000 | 0.000 | 0.000 | 0.000 | 0.000 |
| 190 | 1403 | 0 \| Global XYZ | 0.001 | 0.000 | 0.000 | 0.000 | 0.000 | 0.000 |
| 191 | 1404 | 0 \| Global XYZ | 0.001 | 0.000 | 0.000 | 0.000 | 0.000 | 0.000 |
| 192 | 1405 | 0 \| Global XYZ | 0.001 | 0.000 | 0.000 | 0.000 | 0.000 | 0.000 |
| 193 | 1410 | 0 \| Global XYZ | 0.000 | 0.000 | 0.000 | 0.000 | 0.000 | 0.000 |
| 194 | 1411 | 0 \| Global XYZ | 0.001 | 0.000 | 0.000 | 0.000 | 0.000 | 0.000 |
| 195 | 1412 | 0 \| Global XYZ | 0.001 | 0.000 | 0.000 | 0.000 | 0.000 | 0.000 |
| 196 | 1413 | 0 \| Global XYZ | 0.001 | 0.000 | 0.000 | 0.000 | 0.000 | 0.000 |
| 197 | 1414 | 0 \| Global XYZ | 0.000 | 0.000 | 0.000 | 0.000 | 0.000 | 0.000 |
| 198 | 1415 | 0 \| Global XYZ | 0.001 | 0.000 | 0.000 | 0.000 | 0.000 | 0.000 |
| 199 | 1416 | 0 \| Global XYZ | 0.001 | 0.000 | 0.000 | 0.000 | 0.000 | 0.000 |
| 200 | 1417 | 0 \| Global XYZ | 0.001 | 0.000 | 0.000 | 0.000 | 0.000 | 0.000 |
| 201 | 1418 | 0 \| Global XYZ | 0.001 | 0.000 | 0.000 | 0.000 | 0.000 | 0.000 |
| 202 | 1419 | 0 \| Global XYZ | 0.001 | 0.000 | 0.000 | 0.000 | 0.000 | 0.000 |
| 203 | 1420 | 0 \| Global XYZ | 0.001 | 0.001 | 0.000 | 0.000 | 0.000 | 0.000 |
| 204 | 1421 | 0 \| Global XYZ | 0.001 | 0.001 | 0.000 | 0.000 | 0.000 | 0.000 |
| 205 | 1422 | 0 \| Global XYZ | 0.000 | 0.000 | 0.000 | 0.000 | 0.000 | 0.000 |
| 206 | 1424 | 0 \| Global XYZ | 0.001 | 0.000 | 0.000 | 0.000 | 0.000 | 0.000 |
| 207 | 1425 | 0 \| Global XYZ | 0.001 | 0.000 | 0.000 | 0.000 | 0.000 | 0.000 |
| 208 | 1426 | 0 \| Global XYZ | 0.001 | 0.000 | 0.000 | 0.000 | 0.000 | 0.000 |
| 209 | 1427 | 0 \| Global XYZ | 0.000 | 0.000 | 0.000 | 0.000 | 0.000 | 0.000 |

## 3.1 NODAL LOADS - BY COMPONENTS - COORDINATE SYSTEM

LC13

| No. | On Nodes No. | Coordinate System | Force [kN] $P_X$ / $P_U$ | $P_Y$ / $P_V$ | $P_Z$ / $P_W$ | Moment [kNm] $M_X$ / $M_U$ | $M_Y$ / $M_V$ | $M_Z$ / $M_W$ |
|---|---|---|---|---|---|---|---|---|
| 210 | 1428 | 0 \| Global XYZ | 0.000 | 0.000 | 0.000 | 0.000 | 0.000 | 0.000 |
| 211 | 1431 | 0 \| Global XYZ | 0.000 | 0.000 | 0.000 | 0.000 | 0.000 | 0.000 |
| 212 | 1432 | 0 \| Global XYZ | 0.000 | 0.000 | 0.000 | 0.000 | 0.000 | 0.000 |

## 3.1 NODAL LOADS - BY COMPONENTS - COORDINATE SYSTEM

LC14

**LC14**
Ersatzlasten aus
Eigenform Nr. 6 - 1.42 Hz

| No. | On Nodes No. | Coordinate System | Force [kN] $P_X$ / $P_U$ | $P_Y$ / $P_V$ | $P_Z$ / $P_W$ | Moment [kNm] $M_X$ / $M_U$ | $M_Y$ / $M_V$ | $M_Z$ / $M_W$ |
|---|---|---|---|---|---|---|---|---|
| 1 | 30 | 0 \| Global XYZ | -0.006 | -0.004 | 0.000 | 0.000 | 0.000 | 0.000 |
| 2 | 31 | 0 \| Global XYZ | -0.009 | -0.008 | 0.000 | 0.000 | 0.000 | 0.000 |
| 3 | 32 | 0 \| Global XYZ | -0.002 | 0.000 | 0.000 | 0.000 | 0.000 | 0.000 |
| 4 | 33 | 0 \| Global XYZ | -0.017 | -0.017 | 0.000 | 0.000 | 0.000 | 0.000 |
| 5 | 34 | 0 \| Global XYZ | -0.004 | 0.000 | 0.000 | 0.000 | 0.000 | 0.000 |
| 6 | 35 | 0 \| Global XYZ | -0.004 | -0.001 | 0.000 | 0.000 | 0.000 | 0.000 |
| 7 | 36 | 0 \| Global XYZ | -0.004 | -0.002 | 0.000 | 0.000 | 0.000 | 0.000 |
| 8 | 37 | 0 \| Global XYZ | -0.001 | -0.002 | 0.000 | 0.000 | 0.000 | 0.000 |
| 9 | 38 | 0 \| Global XYZ | 0.035 | -0.013 | 0.003 | 0.000 | 0.000 | 0.000 |
| 10 | 39 | 0 \| Global XYZ | 0.039 | -0.015 | 0.003 | 0.000 | 0.000 | 0.000 |
| 11 | 40 | 0 \| Global XYZ | -0.002 | -0.003 | 0.000 | 0.000 | 0.000 | 0.000 |
| 12 | 41 | 0 \| Global XYZ | -0.005 | -0.002 | 0.000 | 0.000 | 0.000 | 0.000 |
| 13 | 42 | 0 \| Global XYZ | -0.005 | -0.001 | 0.000 | 0.000 | 0.000 | 0.000 |
| 14 | 43 | 0 \| Global XYZ | -0.005 | 0.002 | 0.000 | 0.000 | 0.000 | 0.000 |
| 15 | 44 | 0 \| Global XYZ | -0.004 | -0.003 | 0.000 | 0.000 | 0.000 | 0.000 |
| 16 | 45 | 0 \| Global XYZ | -0.015 | -0.013 | -0.001 | 0.000 | 0.000 | 0.000 |
| 17 | 46 | 0 \| Global XYZ | 0.050 | -0.183 | 0.002 | 0.000 | 0.000 | 0.000 |
| 18 | 47 | 0 \| Global XYZ | 0.527 | -0.197 | 0.002 | 0.000 | 0.000 | 0.000 |
| 19 | 48 | 0 \| Global XYZ | 0.529 | -0.196 | 0.002 | 0.000 | 0.000 | 0.000 |
| 20 | 49 | 0 \| Global XYZ | 0.049 | 0.289 | -0.001 | 0.000 | 0.000 | 0.000 |
| 21 | 50 | 0 \| Global XYZ | -0.103 | 0.582 | -0.002 | 0.000 | 0.000 | 0.000 |
| 22 | 51 | 0 \| Global XYZ | -0.002 | 0.002 | 0.000 | 0.000 | 0.000 | 0.000 |
| 23 | 52 | 0 \| Global XYZ | -0.022 | 0.014 | 0.000 | 0.000 | 0.000 | 0.000 |
| 24 | 53 | 0 \| Global XYZ | -0.011 | 0.006 | 0.000 | 0.000 | 0.000 | 0.000 |
| 25 | 54 | 0 \| Global XYZ | -0.008 | 0.008 | 0.000 | 0.000 | 0.000 | 0.000 |
| 26 | 55 | 0 \| Global XYZ | -0.006 | 0.005 | 0.000 | 0.000 | 0.000 | 0.000 |
| 27 | 56 | 0 \| Global XYZ | -0.001 | 0.001 | 0.000 | 0.000 | 0.000 | 0.000 |
| 28 | 57 | 0 \| Global XYZ | -0.009 | 0.005 | 0.000 | 0.000 | 0.000 | 0.000 |
| 29 | 58 | 0 \| Global XYZ | -0.034 | 0.010 | 0.000 | 0.000 | 0.000 | 0.000 |
| 30 | 59 | 0 \| Global XYZ | -0.011 | 0.001 | 0.000 | 0.000 | 0.000 | 0.000 |
| 31 | 60 | 0 \| Global XYZ | -0.008 | 0.002 | 0.000 | 0.000 | 0.000 | 0.000 |
| 32 | 61 | 0 \| Global XYZ | -0.006 | 0.001 | 0.000 | 0.000 | 0.000 | 0.000 |
| 33 | 63 | 0 \| Global XYZ | -0.001 | 0.000 | 0.000 | 0.000 | 0.000 | 0.000 |
| 34 | 64 | 0 \| Global XYZ | -0.002 | -0.002 | -0.001 | 0.000 | 0.000 | 0.000 |
| 35 | 65 | 0 \| Global XYZ | -0.009 | -0.002 | 0.000 | 0.000 | 0.000 | 0.000 |
| 36 | 66 | 0 \| Global XYZ | -0.033 | -0.001 | 0.000 | 0.000 | 0.000 | 0.000 |
| 37 | 68 | 0 \| Global XYZ | -0.011 | -0.003 | 0.000 | 0.000 | 0.000 | 0.000 |
| 38 | 74 | 0 \| Global XYZ | -0.001 | 0.013 | 0.000 | 0.000 | 0.000 | 0.000 |
| 39 | 78 | 0 \| Global XYZ | -0.023 | -0.015 | 0.000 | 0.000 | 0.000 | 0.000 |
| 40 | 79 | 0 \| Global XYZ | -0.068 | 0.377 | 0.003 | 0.000 | 0.000 | 0.000 |
| 41 | 80 | 0 \| Global XYZ | -0.017 | 0.016 | 0.000 | 0.000 | 0.000 | 0.000 |
| 42 | 81 | 0 \| Global XYZ | 0.003 | 0.008 | 0.000 | 0.000 | 0.000 | 0.000 |
| 43 | 82 | 0 \| Global XYZ | 0.030 | 0.186 | 0.001 | 0.000 | 0.000 | 0.000 |
| 44 | 83 | 0 \| Global XYZ | 0.012 | -0.003 | 0.000 | 0.000 | 0.000 | 0.000 |
| 45 | 84 | 0 \| Global XYZ | 0.352 | -0.132 | -0.003 | 0.000 | 0.000 | 0.000 |
| 46 | 85 | 0 \| Global XYZ | -0.009 | -0.010 | -0.001 | 0.000 | 0.000 | 0.000 |
| 47 | 86 | 0 \| Global XYZ | -0.020 | 0.008 | 0.000 | 0.000 | 0.000 | 0.000 |
| 48 | 87 | 0 \| Global XYZ | -0.011 | -0.006 | -0.001 | 0.000 | 0.000 | 0.000 |
| 49 | 89 | 0 \| Global XYZ | -0.033 | -0.012 | 0.000 | 0.000 | 0.000 | 0.000 |
| 50 | 92 | 0 \| Global XYZ | 0.011 | -0.004 | 0.000 | 0.000 | 0.000 | 0.000 |
| 51 | 93 | 0 \| Global XYZ | 0.351 | -0.132 | -0.003 | 0.000 | 0.000 | 0.000 |
| 52 | 94 | 0 \| Global XYZ | -0.006 | 0.007 | 0.000 | 0.000 | 0.000 | 0.000 |
| 53 | 95 | 0 \| Global XYZ | -0.012 | 0.006 | 0.000 | 0.000 | 0.000 | 0.000 |
| 54 | 96 | 0 \| Global XYZ | -0.020 | -0.003 | 0.000 | 0.000 | 0.000 | 0.000 |
| 55 | 97 | 0 \| Global XYZ | -0.012 | -0.002 | 0.000 | 0.000 | 0.000 | 0.000 |
| 56 | 98 | 0 \| Global XYZ | -0.016 | 0.007 | 0.000 | 0.000 | 0.000 | 0.000 |
| 57 | 99 | 0 \| Global XYZ | -0.020 | -0.008 | 0.000 | 0.000 | 0.000 | 0.000 |
| 58 | 100 | 0 \| Global XYZ | -0.012 | -0.005 | 0.000 | 0.000 | 0.000 | 0.000 |
| 59 | 101 | 0 \| Global XYZ | -0.017 | 0.016 | -0.001 | 0.000 | 0.000 | 0.000 |
| 60 | 102 | 0 \| Global XYZ | -0.016 | -0.002 | 0.000 | 0.000 | 0.000 | 0.000 |
| 61 | 103 | 0 \| Global XYZ | -0.001 | 0.000 | 0.000 | 0.000 | 0.000 | 0.000 |
| 62 | 104 | 0 \| Global XYZ | -0.021 | -0.018 | 0.000 | 0.000 | 0.000 | 0.000 |
| 63 | 105 | 0 \| Global XYZ | -0.017 | -0.006 | 0.000 | 0.000 | 0.000 | 0.000 |
| 64 | 106 | 0 \| Global XYZ | -0.011 | -0.011 | 0.000 | 0.000 | 0.000 | 0.000 |
| 65 | 107 | 0 \| Global XYZ | -0.019 | -0.016 | 0.001 | 0.000 | 0.000 | 0.000 |
| 66 | 108 | 0 \| Global XYZ | -0.001 | 0.000 | 0.000 | 0.000 | 0.000 | 0.000 |
| 67 | 109 | 0 \| Global XYZ | -0.001 | -0.001 | 0.000 | 0.000 | 0.000 | 0.000 |
| 68 | 110 | 0 \| Global XYZ | -0.009 | -0.005 | 0.000 | 0.000 | 0.000 | 0.000 |
| 69 | 111 | 0 \| Global XYZ | -0.002 | 0.000 | 0.000 | 0.000 | 0.000 | 0.000 |
| 70 | 112 | 0 \| Global XYZ | -0.002 | -0.001 | 0.000 | 0.000 | 0.000 | 0.000 |
| 71 | 113 | 0 \| Global XYZ | -0.006 | -0.002 | 0.000 | 0.000 | 0.000 | 0.000 |
| 72 | 114 | 0 \| Global XYZ | -0.009 | -0.003 | 0.000 | 0.000 | 0.000 | 0.000 |
| 73 | 214 | 0 \| Global XYZ | -0.006 | -0.006 | 0.000 | 0.000 | 0.000 | 0.000 |
| 74 | 270 | 0 \| Global XYZ | -0.006 | -0.003 | 0.000 | 0.000 | 0.000 | 0.000 |
| 75 | 271 | 0 \| Global XYZ | -0.006 | -0.001 | 0.000 | 0.000 | 0.000 | 0.000 |
| 76 | 272 | 0 \| Global XYZ | -0.006 | 0.003 | 0.000 | 0.000 | 0.000 | 0.000 |
| 77 | 273 | 0 \| Global XYZ | -0.005 | 0.005 | 0.000 | 0.000 | 0.000 | 0.000 |
| 78 | 274 | 0 \| Global XYZ | -0.036 | 0.027 | 0.000 | 0.000 | 0.000 | 0.000 |
| 79 | 275 | 0 \| Global XYZ | -0.003 | 0.003 | 0.000 | 0.000 | 0.000 | 0.000 |
| 80 | 276 | 0 \| Global XYZ | -0.061 | 0.021 | 0.000 | 0.000 | 0.000 | 0.000 |

## 3.1 NODAL LOADS - BY COMPONENTS - COORDINATE SYSTEM

LC14

| No. | On Nodes No. | Coordinate System | Force [kN] $P_X$ / $P_U$ | $P_Y$ / $P_V$ | $P_Z$ / $P_W$ | Moment [kNm] $M_X$ / $M_U$ | $M_Y$ / $M_V$ | $M_Z$ / $M_W$ |
|---|---|---|---|---|---|---|---|---|
| 81 | 277 | 0 \| Global XYZ | -0.006 | 0.003 | 0.000 | 0.000 | 0.000 | 0.000 |
| 82 | 278 | 0 \| Global XYZ | -0.061 | -0.002 | 0.000 | 0.000 | 0.000 | 0.000 |
| 83 | 279 | 0 \| Global XYZ | 0.000 | 0.000 | 0.000 | 0.000 | 0.000 | 0.000 |
| 84 | 281 | 0 \| Global XYZ | -0.006 | 0.000 | 0.000 | 0.000 | 0.000 | 0.000 |
| 85 | 282 | 0 \| Global XYZ | -0.060 | -0.025 | 0.000 | 0.000 | 0.000 | 0.000 |
| 86 | 283 | 0 \| Global XYZ | -0.006 | -0.003 | 0.000 | 0.000 | 0.000 | 0.000 |
| 87 | 284 | 0 \| Global XYZ | -0.018 | 0.016 | 0.000 | 0.000 | 0.000 | 0.000 |
| 88 | 285 | 0 \| Global XYZ | -0.031 | 0.014 | 0.000 | 0.000 | 0.000 | 0.000 |
| 89 | 286 | 0 \| Global XYZ | -0.031 | -0.001 | 0.000 | 0.000 | 0.000 | 0.000 |
| 90 | 287 | 0 \| Global XYZ | -0.031 | -0.016 | 0.000 | 0.000 | 0.000 | 0.000 |
| 91 | 289 | 0 \| Global XYZ | -0.004 | -0.004 | -0.001 | 0.000 | 0.000 | 0.000 |
| 92 | 290 | 0 \| Global XYZ | -0.024 | -0.023 | 0.000 | 0.000 | 0.000 | 0.000 |
| 93 | 291 | 0 \| Global XYZ | 0.000 | 0.000 | 0.000 | 0.000 | 0.000 | 0.000 |
| 94 | 292 | 0 \| Global XYZ | -0.001 | -0.001 | 0.000 | 0.000 | 0.000 | 0.000 |
| 95 | 302 | 0 \| Global XYZ | 0.000 | 0.000 | 0.000 | 0.000 | 0.000 | 0.000 |
| 96 | 303 | 0 \| Global XYZ | 0.000 | 0.000 | 0.000 | 0.000 | 0.000 | 0.000 |
| 97 | 304 | 0 \| Global XYZ | 0.000 | 0.000 | 0.000 | 0.000 | 0.000 | 0.000 |
| 98 | 305 | 0 \| Global XYZ | 0.000 | 0.000 | 0.000 | 0.000 | 0.000 | 0.000 |
| 99 | 342 | 0 \| Global XYZ | 0.045 | -0.115 | 0.000 | 0.000 | 0.000 | 0.000 |
| 100 | 974 | 0 \| Global XYZ | -0.013 | -0.016 | 0.000 | 0.000 | 0.000 | 0.000 |
| 101 | 975 | 0 \| Global XYZ | -0.044 | -0.034 | 0.001 | 0.000 | 0.000 | 0.000 |
| 102 | 1008 | 0 \| Global XYZ | -0.002 | -0.003 | 0.000 | 0.000 | 0.000 | 0.000 |
| 103 | 1011 | 0 \| Global XYZ | -0.005 | -0.003 | 0.000 | 0.000 | 0.000 | 0.000 |
| 104 | 1017 | 0 \| Global XYZ | -0.007 | -0.006 | -0.002 | 0.000 | 0.000 | 0.000 |
| 105 | 1082 | 0 \| Global XYZ | -0.011 | -0.008 | -0.001 | 0.000 | 0.000 | 0.000 |
| 106 | 1083 | 0 \| Global XYZ | -0.011 | -0.004 | 0.000 | 0.000 | 0.000 | 0.000 |
| 107 | 1084 | 0 \| Global XYZ | -0.011 | -0.001 | 0.000 | 0.000 | 0.000 | 0.000 |
| 108 | 1085 | 0 \| Global XYZ | -0.011 | 0.004 | 0.000 | 0.000 | 0.000 | 0.000 |
| 109 | 1086 | 0 \| Global XYZ | -0.006 | 0.005 | 0.000 | 0.000 | 0.000 | 0.000 |
| 110 | 1087 | 0 \| Global XYZ | 0.014 | -0.057 | 0.000 | 0.000 | 0.000 | 0.000 |
| 111 | 1125 | 0 \| Global XYZ | 0.075 | -0.199 | 0.000 | 0.000 | 0.000 | 0.000 |
| 112 | 1126 | 0 \| Global XYZ | -0.004 | -0.006 | 0.000 | 0.000 | 0.000 | 0.000 |
| 113 | 1127 | 0 \| Global XYZ | -0.003 | -0.004 | 0.000 | 0.000 | 0.000 | 0.000 |
| 114 | 1129 | 0 \| Global XYZ | -0.006 | -0.006 | 0.000 | 0.000 | 0.000 | 0.000 |
| 115 | 1130 | 0 \| Global XYZ | -0.003 | -0.004 | 0.000 | 0.000 | 0.000 | 0.000 |
| 116 | 1139 | 0 \| Global XYZ | 0.001 | -0.004 | 0.000 | 0.000 | 0.000 | 0.000 |
| 117 | 1142 | 0 \| Global XYZ | 0.019 | -0.085 | 0.001 | 0.000 | 0.000 | 0.000 |
| 118 | 1144 | 0 \| Global XYZ | -0.006 | -0.005 | 0.000 | 0.000 | 0.000 | 0.000 |
| 119 | 1290 | 0 \| Global XYZ | 0.062 | -0.166 | 0.002 | 0.000 | 0.000 | 0.000 |
| 120 | 1291 | 0 \| Global XYZ | 0.071 | -0.205 | 0.004 | 0.000 | 0.000 | 0.000 |
| 121 | 1303 | 0 \| Global XYZ | -0.037 | 0.275 | -0.013 | 0.000 | 0.000 | 0.000 |
| 122 | 1305 | 0 \| Global XYZ | 0.044 | 0.151 | -0.005 | 0.000 | 0.000 | 0.000 |
| 123 | 1306 | 0 \| Global XYZ | -0.114 | 0.647 | -0.027 | 0.000 | 0.000 | 0.000 |
| 124 | 1307 | 0 \| Global XYZ | -0.015 | 0.129 | 0.000 | 0.000 | 0.000 | 0.000 |
| 125 | 1308 | 0 \| Global XYZ | 0.053 | 0.321 | -0.010 | 0.000 | 0.000 | 0.000 |
| 126 | 1309 | 0 \| Global XYZ | 0.027 | 0.075 | 0.000 | 0.000 | 0.000 | 0.000 |
| 127 | 1311 | 0 \| Global XYZ | 0.259 | -0.075 | 0.012 | 0.000 | 0.000 | 0.000 |
| 128 | 1312 | 0 \| Global XYZ | 0.580 | -0.215 | 0.025 | 0.000 | 0.000 | 0.000 |
| 129 | 1313 | 0 \| Global XYZ | 0.124 | -0.030 | 0.000 | 0.000 | 0.000 | 0.000 |
| 130 | 1315 | 0 \| Global XYZ | 0.244 | -0.095 | 0.013 | 0.000 | 0.000 | 0.000 |
| 131 | 1316 | 0 \| Global XYZ | 0.575 | -0.216 | 0.026 | 0.000 | 0.000 | 0.000 |
| 132 | 1317 | 0 \| Global XYZ | 0.115 | -0.045 | 0.000 | 0.000 | 0.000 | 0.000 |
| 133 | 1320 | 0 \| Global XYZ | -0.008 | 0.007 | -0.001 | 0.000 | 0.000 | 0.000 |
| 134 | 1321 | 0 \| Global XYZ | -0.016 | 0.017 | -0.002 | 0.000 | 0.000 | 0.000 |
| 135 | 1322 | 0 \| Global XYZ | -0.004 | 0.004 | 0.000 | 0.000 | 0.000 | 0.000 |
| 136 | 1323 | 0 \| Global XYZ | -0.010 | 0.003 | 0.000 | 0.000 | 0.000 | 0.000 |
| 137 | 1324 | 0 \| Global XYZ | -0.017 | 0.007 | -0.001 | 0.000 | 0.000 | 0.000 |
| 138 | 1325 | 0 \| Global XYZ | -0.004 | 0.002 | 0.000 | 0.000 | 0.000 | 0.000 |
| 139 | 1326 | 0 \| Global XYZ | -0.011 | -0.001 | 0.000 | 0.000 | 0.000 | 0.000 |
| 140 | 1327 | 0 \| Global XYZ | -0.018 | -0.002 | 0.000 | 0.000 | 0.000 | 0.000 |
| 141 | 1328 | 0 \| Global XYZ | -0.004 | -0.001 | 0.000 | 0.000 | 0.000 | 0.000 |
| 142 | 1329 | 0 \| Global XYZ | -0.012 | -0.003 | 0.001 | 0.000 | 0.000 | 0.000 |
| 143 | 1330 | 0 \| Global XYZ | -0.019 | -0.007 | 0.001 | 0.000 | 0.000 | 0.000 |
| 144 | 1331 | 0 \| Global XYZ | -0.004 | -0.002 | 0.000 | 0.000 | 0.000 | 0.000 |
| 145 | 1332 | 0 \| Global XYZ | -0.015 | -0.008 | 0.000 | 0.000 | 0.000 | 0.000 |
| 146 | 1333 | 0 \| Global XYZ | -0.022 | -0.017 | 0.001 | 0.000 | 0.000 | 0.000 |
| 147 | 1335 | 0 \| Global XYZ | -0.003 | -0.003 | 0.000 | 0.000 | 0.000 | 0.000 |
| 148 | 1336 | 0 \| Global XYZ | -0.082 | 0.458 | -0.012 | 0.000 | 0.000 | 0.000 |
| 149 | 1337 | 0 \| Global XYZ | 0.036 | 0.227 | -0.004 | 0.000 | 0.000 | 0.000 |
| 150 | 1338 | 0 \| Global XYZ | 0.416 | -0.156 | 0.011 | 0.000 | 0.000 | 0.000 |
| 151 | 1339 | 0 \| Global XYZ | 0.414 | -0.155 | 0.011 | 0.000 | 0.000 | 0.000 |
| 152 | 1340 | 0 \| Global XYZ | -0.057 | 0.034 | -0.003 | 0.000 | 0.000 | 0.000 |
| 153 | 1341 | 0 \| Global XYZ | -0.057 | 0.027 | 0.000 | 0.000 | 0.000 | 0.000 |
| 154 | 1342 | 0 \| Global XYZ | -0.029 | 0.018 | 0.000 | 0.000 | 0.000 | 0.000 |
| 155 | 1343 | 0 \| Global XYZ | -0.057 | 0.012 | -0.001 | 0.000 | 0.000 | 0.000 |
| 156 | 1344 | 0 \| Global XYZ | -0.029 | 0.022 | -0.002 | 0.000 | 0.000 | 0.000 |
| 157 | 1345 | 0 \| Global XYZ | -0.028 | 0.015 | -0.002 | 0.000 | 0.000 | 0.000 |
| 158 | 1346 | 0 \| Global XYZ | -0.028 | 0.012 | 0.001 | 0.000 | 0.000 | 0.000 |
| 159 | 1347 | 0 \| Global XYZ | -0.057 | 0.005 | 0.002 | 0.000 | 0.000 | 0.000 |
| 160 | 1348 | 0 \| Global XYZ | -0.029 | 0.003 | 0.001 | 0.000 | 0.000 | 0.000 |
| 161 | 1349 | 0 \| Global XYZ | -0.029 | 0.008 | 0.000 | 0.000 | 0.000 | 0.000 |
| 162 | 1350 | 0 \| Global XYZ | -0.028 | 0.005 | -0.001 | 0.000 | 0.000 | 0.000 |
| 163 | 1351 | 0 \| Global XYZ | -0.028 | 0.002 | 0.001 | 0.000 | 0.000 | 0.000 |
| 164 | 1352 | 0 \| Global XYZ | -0.056 | -0.009 | -0.002 | 0.000 | 0.000 | 0.000 |
| 165 | 1353 | 0 \| Global XYZ | -0.056 | -0.016 | 0.001 | 0.000 | 0.000 | 0.000 |
| 166 | 1354 | 0 \| Global XYZ | -0.029 | -0.011 | 0.001 | 0.000 | 0.000 | 0.000 |
| 167 | 1355 | 0 \| Global XYZ | -0.029 | -0.006 | -0.001 | 0.000 | 0.000 | 0.000 |
| 168 | 1356 | 0 \| Global XYZ | -0.028 | -0.004 | -0.001 | 0.000 | 0.000 | 0.000 |
| 169 | 1357 | 0 \| Global XYZ | -0.028 | -0.007 | 0.001 | 0.000 | 0.000 | 0.000 |
| 170 | 1358 | 0 \| Global XYZ | -0.056 | -0.031 | 0.000 | 0.000 | 0.000 | 0.000 |
| 171 | 1359 | 0 \| Global XYZ | -0.050 | -0.033 | 0.003 | 0.000 | 0.000 | 0.000 |
| 172 | 1360 | 0 \| Global XYZ | -0.026 | -0.022 | 0.001 | 0.000 | 0.000 | 0.000 |

## 3.1 NODAL LOADS - BY COMPONENTS - COORDINATE SYSTEM

LC14

| No. | On Nodes No. | Coordinate System | Force [kN] $P_X$ / $P_U$ | $P_Y$ / $P_V$ | $P_Z$ / $P_W$ | Moment [kNm] $M_X$ / $M_U$ | $M_Y$ / $M_V$ | $M_Z$ / $M_W$ |
|---|---|---|---|---|---|---|---|---|
| 173 | 1361 | 0 \| Global XYZ | -0.029 | -0.020 | 0.000 | 0.000 | 0.000 | 0.000 |
| 174 | 1362 | 0 \| Global XYZ | -0.028 | -0.013 | -0.001 | 0.000 | 0.000 | 0.000 |
| 175 | 1363 | 0 \| Global XYZ | -0.025 | -0.014 | 0.001 | 0.000 | 0.000 | 0.000 |
| 176 | 1364 | 0 \| Global XYZ | -0.023 | -0.025 | 0.000 | 0.000 | 0.000 | 0.000 |
| 177 | 1365 | 0 \| Global XYZ | -0.044 | -0.038 | -0.003 | 0.000 | 0.000 | 0.000 |
| 178 | 1366 | 0 \| Global XYZ | -0.006 | 0.005 | 0.001 | 0.000 | 0.000 | 0.000 |
| 179 | 1367 | 0 \| Global XYZ | -0.021 | -0.016 | -0.001 | 0.000 | 0.000 | 0.000 |
| 180 | 1371 | 0 \| Global XYZ | -0.006 | -0.005 | 0.000 | 0.000 | 0.000 | 0.000 |
| 181 | 1372 | 0 \| Global XYZ | -0.002 | -0.002 | 0.000 | 0.000 | 0.000 | 0.000 |
| 182 | 1379 | 0 \| Global XYZ | -0.009 | 0.006 | 0.000 | 0.000 | 0.000 | 0.000 |
| 183 | 1396 | 0 \| Global XYZ | -0.006 | 0.004 | 0.001 | 0.000 | 0.000 | 0.000 |
| 184 | 1397 | 0 \| Global XYZ | -0.011 | -0.009 | 0.000 | 0.000 | 0.000 | 0.000 |
| 185 | 1398 | 0 \| Global XYZ | -0.006 | 0.002 | 0.000 | 0.000 | 0.000 | 0.000 |
| 186 | 1399 | 0 \| Global XYZ | -0.006 | 0.001 | 0.000 | 0.000 | 0.000 | 0.000 |
| 187 | 1400 | 0 \| Global XYZ | -0.006 | -0.001 | 0.000 | 0.000 | 0.000 | 0.000 |
| 188 | 1401 | 0 \| Global XYZ | -0.006 | -0.002 | 0.000 | 0.000 | 0.000 | 0.000 |
| 189 | 1402 | 0 \| Global XYZ | -0.006 | -0.004 | -0.001 | 0.000 | 0.000 | 0.000 |
| 190 | 1403 | 0 \| Global XYZ | -0.005 | -0.004 | -0.001 | 0.000 | 0.000 | 0.000 |
| 191 | 1404 | 0 \| Global XYZ | -0.004 | -0.005 | -0.001 | 0.000 | 0.000 | 0.000 |
| 192 | 1405 | 0 \| Global XYZ | -0.006 | 0.007 | 0.000 | 0.000 | 0.000 | 0.000 |
| 193 | 1410 | 0 \| Global XYZ | -0.003 | 0.003 | 0.000 | 0.000 | 0.000 | 0.000 |
| 194 | 1411 | 0 \| Global XYZ | -0.005 | 0.005 | 0.000 | 0.000 | 0.000 | 0.000 |
| 195 | 1412 | 0 \| Global XYZ | -0.004 | -0.003 | 0.000 | 0.000 | 0.000 | 0.000 |
| 196 | 1413 | 0 \| Global XYZ | -0.004 | 0.002 | 0.000 | 0.000 | 0.000 | 0.000 |
| 197 | 1414 | 0 \| Global XYZ | -0.002 | 0.001 | 0.000 | 0.000 | 0.000 | 0.000 |
| 198 | 1415 | 0 \| Global XYZ | -0.008 | 0.006 | 0.000 | 0.000 | 0.000 | 0.000 |
| 199 | 1416 | 0 \| Global XYZ | -0.008 | 0.001 | 0.000 | 0.000 | 0.000 | 0.000 |
| 200 | 1417 | 0 \| Global XYZ | -0.009 | 0.001 | 0.000 | 0.000 | 0.000 | 0.000 |
| 201 | 1418 | 0 \| Global XYZ | -0.008 | -0.003 | 0.000 | 0.000 | 0.000 | 0.000 |
| 202 | 1419 | 0 \| Global XYZ | -0.009 | -0.002 | 0.000 | 0.000 | 0.000 | 0.000 |
| 203 | 1420 | 0 \| Global XYZ | -0.008 | -0.006 | 0.000 | 0.000 | 0.000 | 0.000 |
| 204 | 1421 | 0 \| Global XYZ | -0.009 | -0.006 | 0.000 | 0.000 | 0.000 | 0.000 |
| 205 | 1422 | 0 \| Global XYZ | -0.002 | -0.002 | -0.001 | 0.000 | 0.000 | 0.000 |
| 206 | 1424 | 0 \| Global XYZ | -0.006 | -0.005 | 0.000 | 0.000 | 0.000 | 0.000 |
| 207 | 1425 | 0 \| Global XYZ | -0.004 | -0.003 | 0.000 | 0.000 | 0.000 | 0.000 |
| 208 | 1426 | 0 \| Global XYZ | -0.004 | -0.004 | 0.000 | 0.000 | 0.000 | 0.000 |
| 209 | 1427 | 0 \| Global XYZ | -0.002 | -0.002 | 0.000 | 0.000 | 0.000 | 0.000 |
| 210 | 1428 | 0 \| Global XYZ | -0.002 | -0.002 | 0.000 | 0.000 | 0.000 | 0.000 |
| 211 | 1431 | 0 \| Global XYZ | -0.001 | -0.001 | 0.000 | 0.000 | 0.000 | 0.000 |
| 212 | 1432 | 0 \| Global XYZ | -0.001 | -0.001 | 0.000 | 0.000 | 0.000 | 0.000 |

**LC15**
Ersatzlasten aus
Eigenform Nr. 7 - 1.49 Hz

## 3.1 NODAL LOADS - BY COMPONENTS - COORDINATE SYSTEM

LC15

| No. | On Nodes No. | Coordinate System | Force [kN] $P_X$ / $P_U$ | $P_Y$ / $P_V$ | $P_Z$ / $P_W$ | Moment [kNm] $M_X$ / $M_U$ | $M_Y$ / $M_V$ | $M_Z$ / $M_W$ |
|---|---|---|---|---|---|---|---|---|
| 1 | 30 | 0 \| Global XYZ | 0.000 | 0.000 | 0.000 | 0.000 | 0.000 | 0.000 |
| 2 | 31 | 0 \| Global XYZ | 0.000 | 0.000 | 0.000 | 0.000 | 0.000 | 0.000 |
| 3 | 32 | 0 \| Global XYZ | 0.000 | 0.000 | 0.000 | 0.000 | 0.000 | 0.000 |
| 4 | 33 | 0 \| Global XYZ | 0.000 | 0.000 | 0.000 | 0.000 | 0.000 | 0.000 |
| 5 | 34 | 0 \| Global XYZ | 0.000 | 0.000 | 0.000 | 0.000 | 0.000 | 0.000 |
| 6 | 35 | 0 \| Global XYZ | 0.000 | 0.000 | 0.000 | 0.000 | 0.000 | 0.000 |
| 7 | 36 | 0 \| Global XYZ | 0.000 | 0.000 | 0.000 | 0.000 | 0.000 | 0.000 |
| 8 | 37 | 0 \| Global XYZ | 0.000 | 0.000 | 0.000 | 0.000 | 0.000 | 0.000 |
| 9 | 38 | 0 \| Global XYZ | 0.000 | 0.000 | 0.000 | 0.000 | 0.000 | 0.000 |
| 10 | 39 | 0 \| Global XYZ | 0.000 | 0.000 | 0.000 | 0.000 | 0.000 | 0.000 |
| 11 | 40 | 0 \| Global XYZ | 0.000 | 0.000 | 0.000 | 0.000 | 0.000 | 0.000 |
| 12 | 41 | 0 \| Global XYZ | 0.000 | 0.000 | 0.000 | 0.000 | 0.000 | 0.000 |
| 13 | 42 | 0 \| Global XYZ | 0.000 | 0.000 | 0.000 | 0.000 | 0.000 | 0.000 |
| 14 | 43 | 0 \| Global XYZ | 0.000 | 0.000 | 0.000 | 0.000 | 0.000 | 0.000 |
| 15 | 44 | 0 \| Global XYZ | 0.000 | 0.000 | 0.000 | 0.000 | 0.000 | 0.000 |
| 16 | 45 | 0 \| Global XYZ | 0.000 | 0.000 | 0.000 | 0.000 | 0.000 | 0.000 |
| 17 | 46 | 0 \| Global XYZ | 0.000 | 0.001 | 0.000 | 0.000 | 0.000 | 0.000 |
| 18 | 47 | 0 \| Global XYZ | -0.006 | 0.001 | 0.000 | 0.000 | 0.000 | 0.000 |
| 19 | 48 | 0 \| Global XYZ | -0.006 | 0.001 | 0.000 | 0.000 | 0.000 | 0.000 |
| 20 | 49 | 0 \| Global XYZ | 0.021 | -0.026 | 0.000 | 0.000 | 0.000 | 0.000 |
| 21 | 50 | 0 \| Global XYZ | -0.004 | 0.023 | 0.000 | 0.000 | 0.000 | 0.000 |
| 22 | 51 | 0 \| Global XYZ | 0.000 | 0.000 | 0.000 | 0.000 | 0.000 | 0.000 |
| 23 | 52 | 0 \| Global XYZ | 0.000 | 0.000 | 0.000 | 0.000 | 0.000 | 0.000 |
| 24 | 53 | 0 \| Global XYZ | 0.000 | 0.000 | 0.000 | 0.000 | 0.000 | 0.000 |
| 25 | 54 | 0 \| Global XYZ | 0.000 | 0.000 | 0.000 | 0.000 | 0.000 | 0.000 |
| 26 | 55 | 0 \| Global XYZ | 0.000 | 0.000 | 0.000 | 0.000 | 0.000 | 0.000 |
| 27 | 56 | 0 \| Global XYZ | 0.000 | 0.000 | 0.000 | 0.000 | 0.000 | 0.000 |
| 28 | 57 | 0 \| Global XYZ | 0.000 | 0.000 | 0.000 | 0.000 | 0.000 | 0.000 |
| 29 | 58 | 0 \| Global XYZ | 0.000 | 0.000 | 0.000 | 0.000 | 0.000 | 0.000 |
| 30 | 59 | 0 \| Global XYZ | 0.000 | 0.000 | 0.000 | 0.000 | 0.000 | 0.000 |
| 31 | 60 | 0 \| Global XYZ | 0.000 | 0.000 | 0.000 | 0.000 | 0.000 | 0.000 |
| 32 | 61 | 0 \| Global XYZ | 0.000 | 0.000 | 0.000 | 0.000 | 0.000 | 0.000 |
| 33 | 63 | 0 \| Global XYZ | 0.000 | 0.000 | 0.000 | 0.000 | 0.000 | 0.000 |
| 34 | 64 | 0 \| Global XYZ | 0.000 | 0.000 | 0.000 | 0.000 | 0.000 | 0.000 |
| 35 | 65 | 0 \| Global XYZ | 0.000 | 0.000 | 0.000 | 0.000 | 0.000 | 0.000 |
| 36 | 66 | 0 \| Global XYZ | 0.000 | 0.000 | 0.000 | 0.000 | 0.000 | 0.000 |
| 37 | 68 | 0 \| Global XYZ | 0.000 | 0.000 | 0.000 | 0.000 | 0.000 | 0.000 |
| 38 | 74 | 0 \| Global XYZ | 0.000 | 0.001 | 0.000 | 0.000 | 0.000 | 0.000 |
| 39 | 78 | 0 \| Global XYZ | 0.000 | 0.000 | 0.000 | 0.000 | 0.000 | 0.000 |
| 40 | 79 | 0 \| Global XYZ | -0.002 | 0.015 | 0.000 | 0.000 | 0.000 | 0.000 |
| 41 | 80 | 0 \| Global XYZ | 0.000 | 0.000 | 0.000 | 0.000 | 0.000 | 0.000 |
| 42 | 81 | 0 \| Global XYZ | 0.000 | -0.001 | 0.000 | 0.000 | 0.000 | 0.000 |
| 43 | 82 | 0 \| Global XYZ | 0.014 | -0.017 | 0.000 | 0.000 | 0.000 | 0.000 |

## 3.1 NODAL LOADS - BY COMPONENTS - COORDINATE SYSTEM

LC15

| No. | On Nodes No. | Coordinate System | Force [kN] $P_X$ / $P_U$ | $P_Y$ / $P_V$ | $P_Z$ / $P_W$ | Moment [kNm] $M_X$ / $M_U$ | $M_Y$ / $M_V$ | $M_Z$ / $M_W$ |
|---|---|---|---|---|---|---|---|---|
| 44 | 83 | 0 \| Global XYZ | 0.000 | 0.000 | 0.000 | 0.000 | 0.000 | 0.000 |
| 45 | 84 | 0 \| Global XYZ | -0.004 | 0.001 | 0.000 | 0.000 | 0.000 | 0.000 |
| 46 | 85 | 0 \| Global XYZ | 0.000 | 0.000 | 0.000 | 0.000 | 0.000 | 0.000 |
| 47 | 86 | 0 \| Global XYZ | 0.000 | 0.000 | 0.000 | 0.000 | 0.000 | 0.000 |
| 48 | 87 | 0 \| Global XYZ | 0.000 | 0.000 | 0.000 | 0.000 | 0.000 | 0.000 |
| 49 | 89 | 0 \| Global XYZ | 0.000 | 0.000 | 0.000 | 0.000 | 0.000 | 0.000 |
| 50 | 92 | 0 \| Global XYZ | 0.000 | 0.000 | 0.000 | 0.000 | 0.000 | 0.000 |
| 51 | 93 | 0 \| Global XYZ | -0.004 | 0.001 | 0.000 | 0.000 | 0.000 | 0.000 |
| 52 | 94 | 0 \| Global XYZ | 0.000 | 0.000 | 0.000 | 0.000 | 0.000 | 0.000 |
| 53 | 95 | 0 \| Global XYZ | 0.000 | 0.000 | 0.000 | 0.000 | 0.000 | 0.000 |
| 54 | 96 | 0 \| Global XYZ | 0.000 | 0.000 | 0.000 | 0.000 | 0.000 | 0.000 |
| 55 | 97 | 0 \| Global XYZ | 0.000 | 0.000 | 0.000 | 0.000 | 0.000 | 0.000 |
| 56 | 98 | 0 \| Global XYZ | 0.000 | 0.000 | 0.000 | 0.000 | 0.000 | 0.000 |
| 57 | 99 | 0 \| Global XYZ | 0.000 | 0.000 | 0.000 | 0.000 | 0.000 | 0.000 |
| 58 | 100 | 0 \| Global XYZ | 0.000 | 0.000 | 0.000 | 0.000 | 0.000 | 0.000 |
| 59 | 101 | 0 \| Global XYZ | 0.000 | 0.000 | 0.000 | 0.000 | 0.000 | 0.000 |
| 60 | 102 | 0 \| Global XYZ | 0.000 | 0.000 | 0.000 | 0.000 | 0.000 | 0.000 |
| 61 | 103 | 0 \| Global XYZ | 0.000 | 0.000 | 0.000 | 0.000 | 0.000 | 0.000 |
| 62 | 104 | 0 \| Global XYZ | 0.000 | 0.000 | 0.000 | 0.000 | 0.000 | 0.000 |
| 63 | 105 | 0 \| Global XYZ | 0.000 | 0.000 | 0.000 | 0.000 | 0.000 | 0.000 |
| 64 | 106 | 0 \| Global XYZ | 0.000 | 0.000 | 0.000 | 0.000 | 0.000 | 0.000 |
| 65 | 107 | 0 \| Global XYZ | 0.000 | 0.000 | 0.000 | 0.000 | 0.000 | 0.000 |
| 66 | 108 | 0 \| Global XYZ | 0.000 | 0.000 | 0.000 | 0.000 | 0.000 | 0.000 |
| 67 | 109 | 0 \| Global XYZ | 0.000 | 0.000 | 0.000 | 0.000 | 0.000 | 0.000 |
| 68 | 110 | 0 \| Global XYZ | 0.000 | 0.000 | 0.000 | 0.000 | 0.000 | 0.000 |
| 69 | 111 | 0 \| Global XYZ | 0.000 | 0.000 | 0.000 | 0.000 | 0.000 | 0.000 |
| 70 | 112 | 0 \| Global XYZ | 0.000 | 0.000 | 0.000 | 0.000 | 0.000 | 0.000 |
| 71 | 113 | 0 \| Global XYZ | 0.000 | 0.000 | 0.000 | 0.000 | 0.000 | 0.000 |
| 72 | 114 | 0 \| Global XYZ | 0.000 | 0.000 | 0.000 | 0.000 | 0.000 | 0.000 |
| 73 | 214 | 0 \| Global XYZ | 0.000 | 0.000 | 0.000 | 0.000 | 0.000 | 0.000 |
| 74 | 270 | 0 \| Global XYZ | 0.000 | 0.000 | 0.000 | 0.000 | 0.000 | 0.000 |
| 75 | 271 | 0 \| Global XYZ | 0.000 | 0.000 | 0.000 | 0.000 | 0.000 | 0.000 |
| 76 | 272 | 0 \| Global XYZ | 0.000 | 0.000 | 0.000 | 0.000 | 0.000 | 0.000 |
| 77 | 273 | 0 \| Global XYZ | 0.000 | 0.000 | 0.000 | 0.000 | 0.000 | 0.000 |
| 78 | 274 | 0 \| Global XYZ | 0.000 | 0.000 | 0.000 | 0.000 | 0.000 | 0.000 |
| 79 | 275 | 0 \| Global XYZ | 0.000 | 0.000 | 0.000 | 0.000 | 0.000 | 0.000 |
| 80 | 276 | 0 \| Global XYZ | -0.001 | 0.000 | 0.000 | 0.000 | 0.000 | 0.000 |
| 81 | 277 | 0 \| Global XYZ | 0.000 | 0.000 | 0.000 | 0.000 | 0.000 | 0.000 |
| 82 | 278 | 0 \| Global XYZ | -0.001 | 0.000 | 0.000 | 0.000 | 0.000 | 0.000 |
| 83 | 279 | 0 \| Global XYZ | 0.000 | 0.000 | 0.000 | 0.000 | 0.000 | 0.000 |
| 84 | 281 | 0 \| Global XYZ | 0.000 | 0.000 | 0.000 | 0.000 | 0.000 | 0.000 |
| 85 | 282 | 0 \| Global XYZ | -0.001 | 0.000 | 0.000 | 0.000 | 0.000 | 0.000 |
| 86 | 283 | 0 \| Global XYZ | 0.000 | 0.000 | 0.000 | 0.000 | 0.000 | 0.000 |
| 87 | 284 | 0 \| Global XYZ | 0.000 | 0.000 | 0.000 | 0.000 | 0.000 | 0.000 |
| 88 | 285 | 0 \| Global XYZ | 0.000 | 0.000 | 0.000 | 0.000 | 0.000 | 0.000 |
| 89 | 286 | 0 \| Global XYZ | 0.000 | 0.000 | 0.000 | 0.000 | 0.000 | 0.000 |
| 90 | 287 | 0 \| Global XYZ | 0.000 | 0.000 | 0.000 | 0.000 | 0.000 | 0.000 |
| 91 | 289 | 0 \| Global XYZ | 0.000 | 0.000 | 0.000 | 0.000 | 0.000 | 0.000 |
| 92 | 290 | 0 \| Global XYZ | 0.000 | 0.000 | 0.000 | 0.000 | 0.000 | 0.000 |
| 93 | 291 | 0 \| Global XYZ | 0.000 | 0.000 | 0.000 | 0.000 | 0.000 | 0.000 |
| 94 | 292 | 0 \| Global XYZ | 0.000 | 0.000 | 0.000 | 0.000 | 0.000 | 0.000 |
| 95 | 302 | 0 \| Global XYZ | 0.000 | 0.000 | 0.000 | 0.000 | 0.000 | 0.000 |
| 96 | 303 | 0 \| Global XYZ | 0.000 | 0.000 | 0.000 | 0.000 | 0.000 | 0.000 |
| 97 | 304 | 0 \| Global XYZ | 0.000 | 0.000 | 0.000 | 0.000 | 0.000 | 0.000 |
| 98 | 305 | 0 \| Global XYZ | 0.000 | 0.000 | 0.000 | 0.000 | 0.000 | 0.000 |
| 99 | 342 | 0 \| Global XYZ | 0.000 | 0.001 | 0.000 | 0.000 | 0.000 | 0.000 |
| 100 | 974 | 0 \| Global XYZ | 0.000 | 0.000 | 0.000 | 0.000 | 0.000 | 0.000 |
| 101 | 975 | 0 \| Global XYZ | 0.000 | 0.000 | 0.000 | 0.000 | 0.000 | 0.000 |
| 102 | 1008 | 0 \| Global XYZ | 0.000 | 0.000 | 0.000 | 0.000 | 0.000 | 0.000 |
| 103 | 1011 | 0 \| Global XYZ | 0.000 | 0.000 | 0.000 | 0.000 | 0.000 | 0.000 |
| 104 | 1017 | 0 \| Global XYZ | 0.000 | 0.000 | 0.000 | 0.000 | 0.000 | 0.000 |
| 105 | 1082 | 0 \| Global XYZ | 0.000 | 0.000 | 0.000 | 0.000 | 0.000 | 0.000 |
| 106 | 1083 | 0 \| Global XYZ | 0.000 | 0.000 | 0.000 | 0.000 | 0.000 | 0.000 |
| 107 | 1084 | 0 \| Global XYZ | 0.000 | 0.000 | 0.000 | 0.000 | 0.000 | 0.000 |
| 108 | 1085 | 0 \| Global XYZ | 0.000 | 0.000 | 0.000 | 0.000 | 0.000 | 0.000 |
| 109 | 1086 | 0 \| Global XYZ | 0.000 | 0.000 | 0.000 | 0.000 | 0.000 | 0.000 |
| 110 | 1087 | 0 \| Global XYZ | 0.000 | 0.000 | 0.000 | 0.000 | 0.000 | 0.000 |
| 111 | 1125 | 0 \| Global XYZ | 0.000 | 0.001 | 0.000 | 0.000 | 0.000 | 0.000 |
| 112 | 1126 | 0 \| Global XYZ | 0.000 | 0.000 | 0.000 | 0.000 | 0.000 | 0.000 |
| 113 | 1127 | 0 \| Global XYZ | 0.000 | 0.000 | 0.000 | 0.000 | 0.000 | 0.000 |
| 114 | 1129 | 0 \| Global XYZ | 0.000 | 0.000 | 0.000 | 0.000 | 0.000 | 0.000 |
| 115 | 1130 | 0 \| Global XYZ | 0.000 | 0.000 | 0.000 | 0.000 | 0.000 | 0.000 |
| 116 | 1139 | 0 \| Global XYZ | 0.000 | 0.000 | 0.000 | 0.000 | 0.000 | 0.000 |
| 117 | 1142 | 0 \| Global XYZ | 0.000 | 0.001 | 0.000 | 0.000 | 0.000 | 0.000 |
| 118 | 1144 | 0 \| Global XYZ | 0.000 | 0.000 | 0.000 | 0.000 | 0.000 | 0.000 |
| 119 | 1290 | 0 \| Global XYZ | 0.000 | 0.001 | 0.000 | 0.000 | 0.000 | 0.000 |
| 120 | 1291 | 0 \| Global XYZ | 0.000 | 0.001 | 0.000 | 0.000 | 0.000 | 0.000 |
| 121 | 1303 | 0 \| Global XYZ | -0.001 | 0.011 | -0.001 | 0.000 | 0.000 | 0.000 |
| 122 | 1305 | 0 \| Global XYZ | 0.010 | -0.012 | 0.001 | 0.000 | 0.000 | 0.000 |
| 123 | 1306 | 0 \| Global XYZ | -0.004 | 0.025 | -0.001 | 0.000 | 0.000 | 0.000 |
| 124 | 1307 | 0 \| Global XYZ | 0.000 | 0.005 | 0.000 | 0.000 | 0.000 | 0.000 |
| 125 | 1308 | 0 \| Global XYZ | 0.024 | -0.029 | 0.002 | 0.000 | 0.000 | 0.000 |
| 126 | 1309 | 0 \| Global XYZ | 0.005 | -0.006 | 0.000 | 0.000 | 0.000 | 0.000 |
| 127 | 1311 | 0 \| Global XYZ | -0.003 | 0.000 | 0.000 | 0.000 | 0.000 | 0.000 |
| 128 | 1312 | 0 \| Global XYZ | -0.007 | 0.001 | 0.000 | 0.000 | 0.000 | 0.000 |
| 129 | 1313 | 0 \| Global XYZ | -0.001 | 0.000 | 0.000 | 0.000 | 0.000 | 0.000 |
| 130 | 1315 | 0 \| Global XYZ | -0.003 | 0.000 | 0.000 | 0.000 | 0.000 | 0.000 |
| 131 | 1316 | 0 \| Global XYZ | -0.007 | 0.001 | 0.000 | 0.000 | 0.000 | 0.000 |
| 132 | 1317 | 0 \| Global XYZ | -0.001 | 0.000 | 0.000 | 0.000 | 0.000 | 0.000 |
| 133 | 1320 | 0 \| Global XYZ | 0.000 | 0.000 | 0.000 | 0.000 | 0.000 | 0.000 |
| 134 | 1321 | 0 \| Global XYZ | 0.000 | 0.000 | 0.000 | 0.000 | 0.000 | 0.000 |
| 135 | 1322 | 0 \| Global XYZ | 0.000 | 0.000 | 0.000 | 0.000 | 0.000 | 0.000 |

## 3.1 NODAL LOADS - BY COMPONENTS - COORDINATE SYSTEM

LC15

| No. | On Nodes No. | Coordinate System | Force [kN] $P_X$ / $P_U$ | $P_Y$ / $P_V$ | $P_Z$ / $P_W$ | Moment [kNm] $M_X$ / $M_U$ | $M_Y$ / $M_V$ | $M_Z$ / $M_W$ |
|---|---|---|---|---|---|---|---|---|
| 136 | 1323 | 0 \| Global XYZ | 0.000 | 0.000 | 0.000 | 0.000 | 0.000 | 0.000 |
| 137 | 1324 | 0 \| Global XYZ | 0.000 | 0.000 | 0.000 | 0.000 | 0.000 | 0.000 |
| 138 | 1325 | 0 \| Global XYZ | 0.000 | 0.000 | 0.000 | 0.000 | 0.000 | 0.000 |
| 139 | 1326 | 0 \| Global XYZ | 0.000 | 0.000 | 0.000 | 0.000 | 0.000 | 0.000 |
| 140 | 1327 | 0 \| Global XYZ | 0.000 | 0.000 | 0.000 | 0.000 | 0.000 | 0.000 |
| 141 | 1328 | 0 \| Global XYZ | 0.000 | 0.000 | 0.000 | 0.000 | 0.000 | 0.000 |
| 142 | 1329 | 0 \| Global XYZ | 0.000 | 0.000 | 0.000 | 0.000 | 0.000 | 0.000 |
| 143 | 1330 | 0 \| Global XYZ | 0.000 | 0.000 | 0.000 | 0.000 | 0.000 | 0.000 |
| 144 | 1331 | 0 \| Global XYZ | 0.000 | 0.000 | 0.000 | 0.000 | 0.000 | 0.000 |
| 145 | 1332 | 0 \| Global XYZ | 0.000 | 0.000 | 0.000 | 0.000 | 0.000 | 0.000 |
| 146 | 1333 | 0 \| Global XYZ | 0.000 | 0.000 | 0.000 | 0.000 | 0.000 | 0.000 |
| 147 | 1335 | 0 \| Global XYZ | 0.000 | 0.000 | 0.000 | 0.000 | 0.000 | 0.000 |
| 148 | 1336 | 0 \| Global XYZ | -0.003 | 0.018 | 0.000 | 0.000 | 0.000 | 0.000 |
| 149 | 1337 | 0 \| Global XYZ | 0.017 | -0.021 | 0.001 | 0.000 | 0.000 | 0.000 |
| 150 | 1338 | 0 \| Global XYZ | -0.005 | 0.001 | 0.000 | 0.000 | 0.000 | 0.000 |
| 151 | 1339 | 0 \| Global XYZ | -0.005 | 0.001 | 0.000 | 0.000 | 0.000 | 0.000 |
| 152 | 1340 | 0 \| Global XYZ | -0.001 | 0.000 | 0.000 | 0.000 | 0.000 | 0.000 |
| 153 | 1341 | 0 \| Global XYZ | -0.001 | 0.000 | 0.000 | 0.000 | 0.000 | 0.000 |
| 154 | 1342 | 0 \| Global XYZ | 0.000 | 0.000 | 0.000 | 0.000 | 0.000 | 0.000 |
| 155 | 1343 | 0 \| Global XYZ | -0.001 | 0.000 | 0.000 | 0.000 | 0.000 | 0.000 |
| 156 | 1344 | 0 \| Global XYZ | 0.000 | 0.000 | 0.000 | 0.000 | 0.000 | 0.000 |
| 157 | 1345 | 0 \| Global XYZ | 0.000 | 0.000 | 0.000 | 0.000 | 0.000 | 0.000 |
| 158 | 1346 | 0 \| Global XYZ | 0.000 | 0.000 | 0.000 | 0.000 | 0.000 | 0.000 |
| 159 | 1347 | 0 \| Global XYZ | -0.001 | 0.000 | 0.000 | 0.000 | 0.000 | 0.000 |
| 160 | 1348 | 0 \| Global XYZ | 0.000 | 0.000 | 0.000 | 0.000 | 0.000 | 0.000 |
| 161 | 1349 | 0 \| Global XYZ | 0.000 | 0.000 | 0.000 | 0.000 | 0.000 | 0.000 |
| 162 | 1350 | 0 \| Global XYZ | 0.000 | 0.000 | 0.000 | 0.000 | 0.000 | 0.000 |
| 163 | 1351 | 0 \| Global XYZ | 0.000 | 0.000 | 0.000 | 0.000 | 0.000 | 0.000 |
| 164 | 1352 | 0 \| Global XYZ | -0.001 | 0.000 | 0.000 | 0.000 | 0.000 | 0.000 |
| 165 | 1353 | 0 \| Global XYZ | -0.001 | 0.000 | 0.000 | 0.000 | 0.000 | 0.000 |
| 166 | 1354 | 0 \| Global XYZ | 0.000 | 0.000 | 0.000 | 0.000 | 0.000 | 0.000 |
| 167 | 1355 | 0 \| Global XYZ | 0.000 | 0.000 | 0.000 | 0.000 | 0.000 | 0.000 |
| 168 | 1356 | 0 \| Global XYZ | 0.000 | 0.000 | 0.000 | 0.000 | 0.000 | 0.000 |
| 169 | 1357 | 0 \| Global XYZ | 0.000 | 0.000 | 0.000 | 0.000 | 0.000 | 0.000 |
| 170 | 1358 | 0 \| Global XYZ | -0.001 | 0.000 | 0.000 | 0.000 | 0.000 | 0.000 |
| 171 | 1359 | 0 \| Global XYZ | -0.001 | 0.000 | 0.000 | 0.000 | 0.000 | 0.000 |
| 172 | 1360 | 0 \| Global XYZ | 0.000 | 0.000 | 0.000 | 0.000 | 0.000 | 0.000 |
| 173 | 1361 | 0 \| Global XYZ | 0.000 | 0.000 | 0.000 | 0.000 | 0.000 | 0.000 |
| 174 | 1362 | 0 \| Global XYZ | 0.000 | 0.000 | 0.000 | 0.000 | 0.000 | 0.000 |
| 175 | 1363 | 0 \| Global XYZ | 0.000 | 0.000 | 0.000 | 0.000 | 0.000 | 0.000 |
| 176 | 1364 | 0 \| Global XYZ | 0.000 | 0.000 | 0.000 | 0.000 | 0.000 | 0.000 |
| 177 | 1365 | 0 \| Global XYZ | 0.000 | 0.000 | 0.000 | 0.000 | 0.000 | 0.000 |
| 178 | 1366 | 0 \| Global XYZ | 0.000 | 0.000 | 0.000 | 0.000 | 0.000 | 0.000 |
| 179 | 1367 | 0 \| Global XYZ | 0.000 | 0.000 | 0.000 | 0.000 | 0.000 | 0.000 |
| 180 | 1371 | 0 \| Global XYZ | 0.000 | 0.000 | 0.000 | 0.000 | 0.000 | 0.000 |
| 181 | 1372 | 0 \| Global XYZ | 0.000 | 0.000 | 0.000 | 0.000 | 0.000 | 0.000 |
| 182 | 1379 | 0 \| Global XYZ | 0.000 | 0.000 | 0.000 | 0.000 | 0.000 | 0.000 |
| 183 | 1396 | 0 \| Global XYZ | 0.000 | 0.000 | 0.000 | 0.000 | 0.000 | 0.000 |
| 184 | 1397 | 0 \| Global XYZ | 0.000 | 0.000 | 0.000 | 0.000 | 0.000 | 0.000 |
| 185 | 1398 | 0 \| Global XYZ | 0.000 | 0.000 | 0.000 | 0.000 | 0.000 | 0.000 |
| 186 | 1399 | 0 \| Global XYZ | 0.000 | 0.000 | 0.000 | 0.000 | 0.000 | 0.000 |
| 187 | 1400 | 0 \| Global XYZ | 0.000 | 0.000 | 0.000 | 0.000 | 0.000 | 0.000 |
| 188 | 1401 | 0 \| Global XYZ | 0.000 | 0.000 | 0.000 | 0.000 | 0.000 | 0.000 |
| 189 | 1402 | 0 \| Global XYZ | 0.000 | 0.000 | 0.000 | 0.000 | 0.000 | 0.000 |
| 190 | 1403 | 0 \| Global XYZ | 0.000 | 0.000 | 0.000 | 0.000 | 0.000 | 0.000 |
| 191 | 1404 | 0 \| Global XYZ | 0.000 | 0.000 | 0.000 | 0.000 | 0.000 | 0.000 |
| 192 | 1405 | 0 \| Global XYZ | 0.000 | 0.000 | 0.000 | 0.000 | 0.000 | 0.000 |
| 193 | 1410 | 0 \| Global XYZ | 0.000 | 0.000 | 0.000 | 0.000 | 0.000 | 0.000 |
| 194 | 1411 | 0 \| Global XYZ | 0.000 | 0.000 | 0.000 | 0.000 | 0.000 | 0.000 |
| 195 | 1412 | 0 \| Global XYZ | 0.000 | 0.000 | 0.000 | 0.000 | 0.000 | 0.000 |
| 196 | 1413 | 0 \| Global XYZ | 0.000 | 0.000 | 0.000 | 0.000 | 0.000 | 0.000 |
| 197 | 1414 | 0 \| Global XYZ | 0.000 | 0.000 | 0.000 | 0.000 | 0.000 | 0.000 |
| 198 | 1415 | 0 \| Global XYZ | 0.000 | 0.000 | 0.000 | 0.000 | 0.000 | 0.000 |
| 199 | 1416 | 0 \| Global XYZ | 0.000 | 0.000 | 0.000 | 0.000 | 0.000 | 0.000 |
| 200 | 1417 | 0 \| Global XYZ | 0.000 | 0.000 | 0.000 | 0.000 | 0.000 | 0.000 |
| 201 | 1418 | 0 \| Global XYZ | 0.000 | 0.000 | 0.000 | 0.000 | 0.000 | 0.000 |
| 202 | 1419 | 0 \| Global XYZ | 0.000 | 0.000 | 0.000 | 0.000 | 0.000 | 0.000 |
| 203 | 1420 | 0 \| Global XYZ | 0.000 | 0.000 | 0.000 | 0.000 | 0.000 | 0.000 |
| 204 | 1421 | 0 \| Global XYZ | 0.000 | 0.000 | 0.000 | 0.000 | 0.000 | 0.000 |
| 205 | 1422 | 0 \| Global XYZ | 0.000 | 0.000 | 0.000 | 0.000 | 0.000 | 0.000 |
| 206 | 1424 | 0 \| Global XYZ | 0.000 | 0.000 | 0.000 | 0.000 | 0.000 | 0.000 |
| 207 | 1425 | 0 \| Global XYZ | 0.000 | 0.000 | 0.000 | 0.000 | 0.000 | 0.000 |
| 208 | 1426 | 0 \| Global XYZ | 0.000 | 0.000 | 0.000 | 0.000 | 0.000 | 0.000 |
| 209 | 1427 | 0 \| Global XYZ | 0.000 | 0.000 | 0.000 | 0.000 | 0.000 | 0.000 |
| 210 | 1428 | 0 \| Global XYZ | 0.000 | 0.000 | 0.000 | 0.000 | 0.000 | 0.000 |
| 211 | 1431 | 0 \| Global XYZ | 0.000 | 0.000 | 0.000 | 0.000 | 0.000 | 0.000 |
| 212 | 1432 | 0 \| Global XYZ | 0.000 | 0.000 | 0.000 | 0.000 | 0.000 | 0.000 |

## 3.1 NODAL LOADS - BY COMPONENTS - COORDINATE SYSTEM

LC16

**LC16**
Ersatzlasten aus
Eigenform Nr. 8 - 2.08 Hz

| No. | On Nodes No. | Coordinate System | Force [kN] $P_X$ / $P_U$ | $P_Y$ / $P_V$ | $P_Z$ / $P_W$ | Moment [kNm] $M_X$ / $M_U$ | $M_Y$ / $M_V$ | $M_Z$ / $M_W$ |
|---|---|---|---|---|---|---|---|---|
| 1 | 30 | 0 \| Global XYZ | 0.017 | 0.007 | -0.003 | 0.000 | 0.000 | 0.000 |
| 2 | 31 | 0 \| Global XYZ | 0.009 | 0.012 | 0.004 | 0.000 | 0.000 | 0.000 |
| 3 | 32 | 0 \| Global XYZ | 0.016 | -0.002 | 0.000 | 0.000 | 0.000 | 0.000 |
| 4 | 33 | 0 \| Global XYZ | 0.192 | 0.084 | -0.019 | 0.000 | 0.000 | 0.000 |
| 5 | 34 | 0 \| Global XYZ | 0.018 | 0.002 | 0.001 | 0.000 | 0.000 | 0.000 |
| 6 | 35 | 0 \| Global XYZ | 0.016 | 0.004 | 0.000 | 0.000 | 0.000 | 0.000 |

## 3.1 NODAL LOADS - BY COMPONENTS - COORDINATE SYSTEM

LC16

| No. | On Nodes No. | Coordinate System | Force [kN] $P_X$ / $P_U$ | $P_Y$ / $P_V$ | $P_Z$ / $P_W$ | Moment [kNm] $M_X$ / $M_U$ | $M_Y$ / $M_V$ | $M_Z$ / $M_W$ |
|---|---|---|---|---|---|---|---|---|
| 7 | 36 | 0 \| Global XYZ | 0.017 | 0.005 | -0.002 | 0.000 | 0.000 | 0.000 |
| 8 | 37 | 0 \| Global XYZ | 0.006 | 0.012 | -0.001 | 0.000 | 0.000 | 0.000 |
| 9 | 38 | 0 \| Global XYZ | -0.012 | -0.012 | -0.001 | 0.000 | 0.000 | 0.000 |
| 10 | 39 | 0 \| Global XYZ | -0.005 | 0.002 | -0.003 | 0.000 | 0.000 | 0.000 |
| 11 | 40 | 0 \| Global XYZ | 0.010 | 0.020 | -0.002 | 0.000 | 0.000 | 0.000 |
| 12 | 41 | 0 \| Global XYZ | 0.024 | -0.005 | 0.000 | 0.000 | 0.000 | 0.000 |
| 13 | 42 | 0 \| Global XYZ | 0.025 | 0.016 | 0.000 | 0.000 | 0.000 | 0.000 |
| 14 | 43 | 0 \| Global XYZ | 0.028 | -0.011 | 0.000 | 0.000 | 0.000 | 0.000 |
| 15 | 44 | 0 \| Global XYZ | 0.041 | 0.014 | 0.000 | 0.000 | 0.000 | 0.000 |
| 16 | 45 | 0 \| Global XYZ | 0.165 | 0.067 | -0.014 | 0.000 | 0.000 | 0.000 |
| 17 | 46 | 0 \| Global XYZ | 0.006 | -0.301 | 0.000 | 0.000 | 0.000 | 0.000 |
| 18 | 47 | 0 \| Global XYZ | -0.274 | 0.215 | -0.001 | 0.000 | 0.000 | 0.000 |
| 19 | 48 | 0 \| Global XYZ | 0.201 | -0.033 | 0.001 | 0.000 | 0.000 | 0.000 |
| 20 | 49 | 0 \| Global XYZ | -0.006 | 0.179 | 0.000 | 0.000 | 0.000 | 0.000 |
| 21 | 50 | 0 \| Global XYZ | -0.029 | 0.214 | -0.001 | 0.000 | 0.000 | 0.000 |
| 22 | 51 | 0 \| Global XYZ | -0.140 | -0.017 | 0.000 | 0.000 | 0.000 | 0.000 |
| 23 | 52 | 0 \| Global XYZ | 0.229 | -0.093 | 0.001 | 0.000 | 0.000 | 0.000 |
| 24 | 53 | 0 \| Global XYZ | -0.861 | -0.043 | 0.000 | 0.000 | 0.000 | 0.000 |
| 25 | 54 | 0 \| Global XYZ | 0.010 | -0.054 | -0.002 | 0.000 | 0.000 | 0.000 |
| 26 | 55 | 0 \| Global XYZ | 0.018 | -0.031 | -0.002 | 0.000 | 0.000 | 0.000 |
| 27 | 56 | 0 \| Global XYZ | -0.086 | -0.003 | 0.000 | 0.000 | 0.000 | 0.000 |
| 28 | 57 | 0 \| Global XYZ | 0.011 | -0.025 | 0.000 | 0.000 | 0.000 | 0.000 |
| 29 | 58 | 0 \| Global XYZ | 0.353 | -0.075 | 0.000 | 0.000 | 0.000 | 0.000 |
| 30 | 59 | 0 \| Global XYZ | -0.861 | 0.007 | 0.000 | 0.000 | 0.000 | 0.000 |
| 31 | 60 | 0 \| Global XYZ | 0.013 | 0.008 | 0.002 | 0.000 | 0.000 | 0.000 |
| 32 | 61 | 0 \| Global XYZ | 0.017 | 0.005 | 0.004 | 0.000 | 0.000 | 0.000 |
| 33 | 63 | 0 \| Global XYZ | -0.086 | 0.004 | 0.000 | 0.000 | 0.000 | 0.000 |
| 34 | 64 | 0 \| Global XYZ | 0.006 | 0.015 | 0.001 | 0.000 | 0.000 | 0.000 |
| 35 | 65 | 0 \| Global XYZ | 0.015 | 0.036 | 0.001 | 0.000 | 0.000 | 0.000 |
| 36 | 66 | 0 \| Global XYZ | 0.350 | -0.009 | -0.001 | 0.000 | 0.000 | 0.000 |
| 37 | 68 | 0 \| Global XYZ | -0.861 | 0.009 | -0.001 | 0.000 | 0.000 | 0.000 |
| 38 | 74 | 0 \| Global XYZ | 0.000 | 0.005 | 0.000 | 0.000 | 0.000 | 0.000 |
| 39 | 78 | 0 \| Global XYZ | 0.236 | 0.075 | -0.001 | 0.000 | 0.000 | 0.000 |
| 40 | 79 | 0 \| Global XYZ | 0.037 | 0.157 | 0.001 | 0.000 | 0.000 | 0.000 |
| 41 | 80 | 0 \| Global XYZ | 0.091 | -0.121 | 0.001 | 0.000 | 0.000 | 0.000 |
| 42 | 81 | 0 \| Global XYZ | 0.001 | 0.005 | 0.000 | 0.000 | 0.000 | 0.000 |
| 43 | 82 | 0 \| Global XYZ | 0.054 | 0.158 | 0.001 | 0.000 | 0.000 | 0.000 |
| 44 | 83 | 0 \| Global XYZ | 0.005 | 0.000 | 0.000 | 0.000 | 0.000 | 0.000 |
| 45 | 84 | 0 \| Global XYZ | 0.188 | 0.052 | -0.001 | 0.000 | 0.000 | 0.000 |
| 46 | 85 | 0 \| Global XYZ | 0.006 | 0.043 | 0.004 | 0.000 | 0.000 | 0.000 |
| 47 | 86 | 0 \| Global XYZ | 0.098 | -0.041 | 0.000 | 0.000 | 0.000 | 0.000 |
| 48 | 87 | 0 \| Global XYZ | -0.861 | 0.010 | 0.003 | 0.000 | 0.000 | 0.000 |
| 49 | 89 | 0 \| Global XYZ | 0.346 | 0.054 | 0.001 | 0.000 | 0.000 | 0.000 |
| 50 | 92 | 0 \| Global XYZ | -0.005 | 0.006 | 0.000 | 0.000 | 0.000 | 0.000 |
| 51 | 93 | 0 \| Global XYZ | -0.152 | 0.236 | 0.002 | 0.000 | 0.000 | 0.000 |
| 52 | 94 | 0 \| Global XYZ | 0.026 | -0.051 | 0.000 | 0.000 | 0.000 | 0.000 |
| 53 | 95 | 0 \| Global XYZ | 0.049 | -0.028 | 0.000 | 0.000 | 0.000 | 0.000 |
| 54 | 96 | 0 \| Global XYZ | 0.084 | 0.065 | -0.001 | 0.000 | 0.000 | 0.000 |
| 55 | 97 | 0 \| Global XYZ | 0.051 | 0.043 | 0.001 | 0.000 | 0.000 | 0.000 |
| 56 | 98 | 0 \| Global XYZ | -0.024 | -0.033 | -0.002 | 0.000 | 0.000 | 0.000 |
| 57 | 99 | 0 \| Global XYZ | 0.080 | -0.023 | 0.001 | 0.000 | 0.000 | 0.000 |
| 58 | 100 | 0 \| Global XYZ | 0.052 | -0.014 | -0.001 | 0.000 | 0.000 | 0.000 |
| 59 | 101 | 0 \| Global XYZ | -0.024 | -0.126 | 0.014 | 0.000 | 0.000 | 0.000 |
| 60 | 102 | 0 \| Global XYZ | -0.028 | 0.054 | -0.005 | 0.000 | 0.000 | 0.000 |
| 61 | 103 | 0 \| Global XYZ | -0.001 | 0.001 | 0.000 | 0.000 | 0.000 | 0.000 |
| 62 | 104 | 0 \| Global XYZ | 0.089 | 0.074 | 0.000 | 0.000 | 0.000 | 0.000 |
| 63 | 105 | 0 \| Global XYZ | -0.029 | -0.020 | 0.003 | 0.000 | 0.000 | 0.000 |
| 64 | 106 | 0 \| Global XYZ | 0.047 | 0.045 | 0.001 | 0.000 | 0.000 | 0.000 |
| 65 | 107 | 0 \| Global XYZ | -0.029 | 0.066 | -0.003 | 0.000 | 0.000 | 0.000 |
| 66 | 108 | 0 \| Global XYZ | -0.008 | 0.001 | 0.000 | 0.000 | 0.000 | 0.000 |
| 67 | 109 | 0 \| Global XYZ | -0.086 | -0.001 | 0.000 | 0.000 | 0.000 | 0.000 |
| 68 | 110 | 0 \| Global XYZ | 0.014 | -0.010 | 0.000 | 0.000 | 0.000 | 0.000 |
| 69 | 111 | 0 \| Global XYZ | 0.016 | 0.001 | 0.000 | 0.000 | 0.000 | 0.000 |
| 70 | 112 | 0 \| Global XYZ | 0.016 | 0.004 | -0.001 | 0.000 | 0.000 | 0.000 |
| 71 | 113 | 0 \| Global XYZ | 0.014 | 0.007 | 0.000 | 0.000 | 0.000 | 0.000 |
| 72 | 114 | 0 \| Global XYZ | 0.014 | 0.011 | -0.001 | 0.000 | 0.000 | 0.000 |
| 73 | 214 | 0 \| Global XYZ | 0.020 | 0.027 | 0.000 | 0.000 | 0.000 | 0.000 |
| 74 | 270 | 0 \| Global XYZ | 0.018 | -0.007 | 0.000 | 0.000 | 0.000 | 0.000 |
| 75 | 271 | 0 \| Global XYZ | 0.018 | 0.023 | 0.001 | 0.000 | 0.000 | 0.000 |
| 76 | 272 | 0 \| Global XYZ | 0.020 | -0.015 | 0.000 | 0.000 | 0.000 | 0.000 |
| 77 | 273 | 0 \| Global XYZ | 0.014 | -0.039 | 0.000 | 0.000 | 0.000 | 0.000 |
| 78 | 274 | 0 \| Global XYZ | 0.405 | -0.179 | -0.002 | 0.000 | 0.000 | 0.000 |
| 79 | 275 | 0 \| Global XYZ | 0.039 | -0.020 | -0.003 | 0.000 | 0.000 | 0.000 |
| 80 | 276 | 0 \| Global XYZ | 0.680 | -0.157 | 0.000 | 0.000 | 0.000 | 0.000 |
| 81 | 277 | 0 \| Global XYZ | 0.072 | -0.019 | -0.002 | 0.000 | 0.000 | 0.000 |
| 82 | 278 | 0 \| Global XYZ | 0.677 | -0.017 | 0.003 | 0.000 | 0.000 | 0.000 |
| 83 | 279 | 0 \| Global XYZ | 0.000 | 0.001 | 0.000 | 0.000 | 0.000 | 0.000 |
| 84 | 281 | 0 \| Global XYZ | 0.073 | -0.002 | 0.003 | 0.000 | 0.000 | 0.000 |
| 85 | 282 | 0 \| Global XYZ | 0.672 | 0.115 | -0.003 | 0.000 | 0.000 | 0.000 |
| 86 | 283 | 0 \| Global XYZ | 0.073 | 0.014 | -0.001 | 0.000 | 0.000 | 0.000 |
| 87 | 284 | 0 \| Global XYZ | 0.222 | -0.111 | 0.000 | 0.000 | 0.000 | 0.000 |
| 88 | 285 | 0 \| Global XYZ | 0.389 | -0.101 | -0.001 | 0.000 | 0.000 | 0.000 |
| 89 | 286 | 0 \| Global XYZ | 0.389 | -0.011 | 0.000 | 0.000 | 0.000 | 0.000 |
| 90 | 287 | 0 \| Global XYZ | 0.389 | 0.074 | -0.001 | 0.000 | 0.000 | 0.000 |
| 91 | 289 | 0 \| Global XYZ | 0.051 | 0.020 | 0.003 | 0.000 | 0.000 | 0.000 |
| 92 | 290 | 0 \| Global XYZ | 0.300 | 0.114 | -0.001 | 0.000 | 0.000 | 0.000 |
| 93 | 291 | 0 \| Global XYZ | 0.003 | 0.001 | 0.000 | 0.000 | 0.000 | 0.000 |
| 94 | 292 | 0 \| Global XYZ | 0.010 | 0.004 | 0.001 | 0.000 | 0.000 | 0.000 |
| 95 | 302 | 0 \| Global XYZ | 0.000 | -0.003 | 0.000 | 0.000 | 0.000 | 0.000 |
| 96 | 303 | 0 \| Global XYZ | 0.000 | -0.001 | 0.000 | 0.000 | 0.000 | 0.000 |
| 97 | 304 | 0 \| Global XYZ | -0.001 | 0.001 | 0.000 | 0.000 | 0.000 | 0.000 |
| 98 | 305 | 0 \| Global XYZ | -0.001 | 0.000 | 0.000 | 0.000 | 0.000 | 0.000 |

## 3.1 NODAL LOADS - BY COMPONENTS - COORDINATE SYSTEM

LC16

| No. | On Nodes No. | Coordinate System | Force [kN] $P_X$ / $P_U$ | $P_Y$ / $P_V$ | $P_Z$ / $P_W$ | Moment [kNm] $M_X$ / $M_U$ | $M_Y$ / $M_V$ | $M_Z$ / $M_W$ |
|---|---|---|---|---|---|---|---|---|
| 99 | 342 | 0 \| Global XYZ | 0.009 | 0.220 | 0.000 | 0.000 | 0.000 | 0.000 |
| 100 | 974 | 0 \| Global XYZ | 0.163 | 0.079 | 0.000 | 0.000 | 0.000 | 0.000 |
| 101 | 975 | 0 \| Global XYZ | 0.491 | 0.169 | -0.003 | 0.000 | 0.000 | 0.000 |
| 102 | 1008 | 0 \| Global XYZ | 0.031 | 0.015 | 0.002 | 0.000 | 0.000 | 0.000 |
| 103 | 1011 | 0 \| Global XYZ | 0.055 | 0.016 | 0.000 | 0.000 | 0.000 | 0.000 |
| 104 | 1017 | 0 \| Global XYZ | 0.075 | 0.030 | 0.003 | 0.000 | 0.000 | 0.000 |
| 105 | 1082 | 0 \| Global XYZ | -0.857 | 0.034 | 0.005 | 0.000 | 0.000 | 0.000 |
| 106 | 1083 | 0 \| Global XYZ | -0.857 | -0.008 | 0.000 | 0.000 | 0.000 | 0.000 |
| 107 | 1084 | 0 \| Global XYZ | -0.858 | 0.027 | 0.000 | 0.000 | 0.000 | 0.000 |
| 108 | 1085 | 0 \| Global XYZ | -0.858 | -0.019 | 0.000 | 0.000 | 0.000 | 0.000 |
| 109 | 1086 | 0 \| Global XYZ | -0.458 | -0.037 | 0.001 | 0.000 | 0.000 | 0.000 |
| 110 | 1087 | 0 \| Global XYZ | 0.003 | 0.068 | 0.000 | 0.000 | 0.000 | 0.000 |
| 111 | 1125 | 0 \| Global XYZ | 0.014 | 0.226 | 0.000 | 0.000 | 0.000 | 0.000 |
| 112 | 1126 | 0 \| Global XYZ | 0.002 | 0.048 | -0.001 | 0.000 | 0.000 | 0.000 |
| 113 | 1127 | 0 \| Global XYZ | 0.009 | 0.027 | -0.003 | 0.000 | 0.000 | 0.000 |
| 114 | 1129 | 0 \| Global XYZ | 0.024 | 0.045 | -0.003 | 0.000 | 0.000 | 0.000 |
| 115 | 1130 | 0 \| Global XYZ | 0.013 | 0.028 | 0.001 | 0.000 | 0.000 | 0.000 |
| 116 | 1139 | 0 \| Global XYZ | 0.000 | 0.005 | 0.000 | 0.000 | 0.000 | 0.000 |
| 117 | 1142 | 0 \| Global XYZ | 0.002 | -0.202 | 0.000 | 0.000 | 0.000 | 0.000 |
| 118 | 1144 | 0 \| Global XYZ | -0.433 | 0.039 | 0.002 | 0.000 | 0.000 | 0.000 |
| 119 | 1290 | 0 \| Global XYZ | 0.011 | 0.129 | 0.000 | 0.000 | 0.000 | 0.000 |
| 120 | 1291 | 0 \| Global XYZ | 0.011 | -0.096 | 0.001 | 0.000 | 0.000 | 0.000 |
| 121 | 1303 | 0 \| Global XYZ | -0.408 | -0.028 | -0.005 | 0.000 | 0.000 | 0.000 |
| 122 | 1305 | 0 \| Global XYZ | -0.343 | -0.163 | -0.004 | 0.000 | 0.000 | 0.000 |
| 123 | 1306 | 0 \| Global XYZ | -0.321 | 0.143 | -0.009 | 0.000 | 0.000 | 0.000 |
| 124 | 1307 | 0 \| Global XYZ | -0.002 | 0.048 | 0.000 | 0.000 | 0.000 | 0.000 |
| 125 | 1308 | 0 \| Global XYZ | -0.276 | 0.004 | -0.007 | 0.000 | 0.000 | 0.000 |
| 126 | 1309 | 0 \| Global XYZ | 0.008 | 0.046 | 0.000 | 0.000 | 0.000 | 0.000 |
| 127 | 1311 | 0 \| Global XYZ | -0.160 | -0.362 | 0.006 | 0.000 | 0.000 | 0.000 |
| 128 | 1312 | 0 \| Global XYZ | 0.019 | -0.312 | 0.010 | 0.000 | 0.000 | 0.000 |
| 129 | 1313 | 0 \| Global XYZ | 0.051 | 0.002 | 0.000 | 0.000 | 0.000 | 0.000 |
| 130 | 1315 | 0 \| Global XYZ | -0.263 | -0.307 | -0.009 | 0.000 | 0.000 | 0.000 |
| 131 | 1316 | 0 \| Global XYZ | -0.411 | -0.100 | -0.016 | 0.000 | 0.000 | 0.000 |
| 132 | 1317 | 0 \| Global XYZ | -0.056 | 0.061 | 0.000 | 0.000 | 0.000 | 0.000 |
| 133 | 1320 | 0 \| Global XYZ | -0.357 | -0.055 | 0.020 | 0.000 | 0.000 | 0.000 |
| 134 | 1321 | 0 \| Global XYZ | -0.246 | -0.130 | 0.029 | 0.000 | 0.000 | 0.000 |
| 135 | 1322 | 0 \| Global XYZ | 0.004 | -0.030 | 0.000 | 0.000 | 0.000 | 0.000 |
| 136 | 1323 | 0 \| Global XYZ | -0.300 | -0.015 | -0.002 | 0.000 | 0.000 | 0.000 |
| 137 | 1324 | 0 \| Global XYZ | -0.206 | -0.036 | -0.003 | 0.000 | 0.000 | 0.000 |
| 138 | 1325 | 0 \| Global XYZ | 0.003 | -0.008 | 0.000 | 0.000 | 0.000 | 0.000 |
| 139 | 1326 | 0 \| Global XYZ | -0.231 | 0.025 | 0.008 | 0.000 | 0.000 | 0.000 |
| 140 | 1327 | 0 \| Global XYZ | -0.165 | 0.057 | 0.004 | 0.000 | 0.000 | 0.000 |
| 141 | 1328 | 0 \| Global XYZ | -0.005 | 0.013 | 0.000 | 0.000 | 0.000 | 0.000 |
| 142 | 1329 | 0 \| Global XYZ | -0.202 | -0.009 | -0.010 | 0.000 | 0.000 | 0.000 |
| 143 | 1330 | 0 \| Global XYZ | -0.148 | -0.021 | -0.007 | 0.000 | 0.000 | 0.000 |
| 144 | 1331 | 0 \| Global XYZ | -0.006 | -0.004 | 0.000 | 0.000 | 0.000 | 0.000 |
| 145 | 1332 | 0 \| Global XYZ | -0.298 | 0.032 | -0.007 | 0.000 | 0.000 | 0.000 |
| 146 | 1333 | 0 \| Global XYZ | -0.177 | 0.071 | -0.008 | 0.000 | 0.000 | 0.000 |
| 147 | 1335 | 0 \| Global XYZ | -0.001 | 0.012 | 0.000 | 0.000 | 0.000 | 0.000 |
| 148 | 1336 | 0 \| Global XYZ | -0.059 | 0.156 | -0.004 | 0.000 | 0.000 | 0.000 |
| 149 | 1337 | 0 \| Global XYZ | -0.043 | 0.113 | -0.003 | 0.000 | 0.000 | 0.000 |
| 150 | 1338 | 0 \| Global XYZ | 0.127 | -0.070 | 0.004 | 0.000 | 0.000 | 0.000 |
| 151 | 1339 | 0 \| Global XYZ | -0.234 | 0.114 | -0.007 | 0.000 | 0.000 | 0.000 |
| 152 | 1340 | 0 \| Global XYZ | 0.633 | -0.235 | -0.008 | 0.000 | 0.000 | 0.000 |
| 153 | 1341 | 0 \| Global XYZ | 0.633 | -0.190 | 0.005 | 0.000 | 0.000 | 0.000 |
| 154 | 1342 | 0 \| Global XYZ | 0.368 | -0.125 | -0.034 | 0.000 | 0.000 | 0.000 |
| 155 | 1343 | 0 \| Global XYZ | 0.632 | -0.102 | -0.009 | 0.000 | 0.000 | 0.000 |
| 156 | 1344 | 0 \| Global XYZ | 0.368 | -0.154 | -0.169 | 0.000 | 0.000 | 0.000 |
| 157 | 1345 | 0 \| Global XYZ | 0.295 | -0.101 | 0.004 | 0.000 | 0.000 | 0.000 |
| 158 | 1346 | 0 \| Global XYZ | 0.295 | -0.082 | 0.001 | 0.000 | 0.000 | 0.000 |
| 159 | 1347 | 0 \| Global XYZ | 0.630 | -0.058 | -0.001 | 0.000 | 0.000 | 0.000 |
| 160 | 1348 | 0 \| Global XYZ | 0.368 | -0.038 | 0.063 | 0.000 | 0.000 | 0.000 |
| 161 | 1349 | 0 \| Global XYZ | 0.368 | -0.066 | -0.027 | 0.000 | 0.000 | 0.000 |
| 162 | 1350 | 0 \| Global XYZ | 0.294 | -0.044 | 0.003 | 0.000 | 0.000 | 0.000 |
| 163 | 1351 | 0 \| Global XYZ | 0.293 | -0.026 | 0.003 | 0.000 | 0.000 | 0.000 |
| 164 | 1352 | 0 \| Global XYZ | 0.628 | 0.026 | 0.003 | 0.000 | 0.000 | 0.000 |
| 165 | 1353 | 0 \| Global XYZ | 0.627 | 0.067 | 0.006 | 0.000 | 0.000 | 0.000 |
| 166 | 1354 | 0 \| Global XYZ | 0.368 | 0.044 | 0.096 | 0.000 | 0.000 | 0.000 |
| 167 | 1355 | 0 \| Global XYZ | 0.368 | 0.017 | -0.023 | 0.000 | 0.000 | 0.000 |
| 168 | 1356 | 0 \| Global XYZ | 0.291 | 0.011 | 0.000 | 0.000 | 0.000 | 0.000 |
| 169 | 1357 | 0 \| Global XYZ | 0.290 | 0.028 | 0.002 | 0.000 | 0.000 | 0.000 |
| 170 | 1358 | 0 \| Global XYZ | 0.624 | 0.146 | -0.028 | 0.000 | 0.000 | 0.000 |
| 171 | 1359 | 0 \| Global XYZ | 0.554 | 0.164 | -0.030 | 0.000 | 0.000 | 0.000 |
| 172 | 1360 | 0 \| Global XYZ | 0.328 | 0.108 | -0.103 | 0.000 | 0.000 | 0.000 |
| 173 | 1361 | 0 \| Global XYZ | 0.368 | 0.096 | -0.178 | 0.000 | 0.000 | 0.000 |
| 174 | 1362 | 0 \| Global XYZ | 0.288 | 0.062 | -0.011 | 0.000 | 0.000 | 0.000 |
| 175 | 1363 | 0 \| Global XYZ | 0.255 | 0.070 | -0.016 | 0.000 | 0.000 | 0.000 |
| 176 | 1364 | 0 \| Global XYZ | 0.290 | 0.126 | 0.020 | 0.000 | 0.000 | 0.000 |
| 177 | 1365 | 0 \| Global XYZ | 0.485 | 0.190 | -0.005 | 0.000 | 0.000 | 0.000 |
| 178 | 1366 | 0 \| Global XYZ | 0.072 | -0.031 | -0.007 | 0.000 | 0.000 | 0.000 |
| 179 | 1367 | 0 \| Global XYZ | 0.219 | 0.080 | -0.011 | 0.000 | 0.000 | 0.000 |
| 180 | 1371 | 0 \| Global XYZ | 0.060 | 0.024 | 0.000 | 0.000 | 0.000 | 0.000 |
| 181 | 1372 | 0 \| Global XYZ | 0.021 | 0.008 | 0.001 | 0.000 | 0.000 | 0.000 |
| 182 | 1379 | 0 \| Global XYZ | 0.047 | -0.043 | 0.001 | 0.000 | 0.000 | 0.000 |
| 183 | 1396 | 0 \| Global XYZ | 0.072 | -0.025 | -0.006 | 0.000 | 0.000 | 0.000 |
| 184 | 1397 | 0 \| Global XYZ | 0.114 | 0.047 | -0.010 | 0.000 | 0.000 | 0.000 |
| 185 | 1398 | 0 \| Global XYZ | 0.072 | -0.013 | 0.002 | 0.000 | 0.000 | 0.000 |
| 186 | 1399 | 0 \| Global XYZ | 0.072 | -0.008 | 0.003 | 0.000 | 0.000 | 0.000 |
| 187 | 1400 | 0 \| Global XYZ | 0.073 | 0.003 | 0.001 | 0.000 | 0.000 | 0.000 |
| 188 | 1401 | 0 \| Global XYZ | 0.073 | 0.009 | -0.001 | 0.000 | 0.000 | 0.000 |
| 189 | 1402 | 0 \| Global XYZ | 0.073 | 0.019 | 0.001 | 0.000 | 0.000 | 0.000 |
| 190 | 1403 | 0 \| Global XYZ | 0.065 | 0.022 | 0.003 | 0.000 | 0.000 | 0.000 |

## 3.1 NODAL LOADS - BY COMPONENTS - COORDINATE SYSTEM

LC16

| No. | On Nodes No. | Coordinate System | Force [kN] $P_X$ / $P_U$ | $P_Y$ / $P_V$ | $P_Z$ / $P_W$ | Moment [kNm] $M_X$ / $M_U$ | $M_Y$ / $M_V$ | $M_Z$ / $M_W$ |
|---|---|---|---|---|---|---|---|---|
| 191 | 1404 | 0 \| Global XYZ | 0.055 | 0.024 | 0.004 | 0.000 | 0.000 | 0.000 |
| 192 | 1405 | 0 \| Global XYZ | 0.006 | -0.059 | -0.002 | 0.000 | 0.000 | 0.000 |
| 193 | 1410 | 0 \| Global XYZ | 0.012 | -0.022 | 0.000 | 0.000 | 0.000 | 0.000 |
| 194 | 1411 | 0 \| Global XYZ | 0.028 | -0.035 | 0.000 | 0.000 | 0.000 | 0.000 |
| 195 | 1412 | 0 \| Global XYZ | 0.017 | 0.013 | 0.000 | 0.000 | 0.000 | 0.000 |
| 196 | 1413 | 0 \| Global XYZ | 0.020 | -0.016 | 0.000 | 0.000 | 0.000 | 0.000 |
| 197 | 1414 | 0 \| Global XYZ | 0.016 | -0.005 | 0.000 | 0.000 | 0.000 | 0.000 |
| 198 | 1415 | 0 \| Global XYZ | 0.035 | -0.045 | -0.002 | 0.000 | 0.000 | 0.000 |
| 199 | 1416 | 0 \| Global XYZ | 0.035 | 0.006 | 0.004 | 0.000 | 0.000 | 0.000 |
| 200 | 1417 | 0 \| Global XYZ | 0.043 | 0.006 | 0.001 | 0.000 | 0.000 | 0.000 |
| 201 | 1418 | 0 \| Global XYZ | 0.036 | 0.010 | 0.001 | 0.000 | 0.000 | 0.000 |
| 202 | 1419 | 0 \| Global XYZ | 0.035 | 0.010 | 0.000 | 0.000 | 0.000 | 0.000 |
| 203 | 1420 | 0 \| Global XYZ | 0.036 | 0.014 | -0.031 | 0.000 | 0.000 | 0.000 |
| 204 | 1421 | 0 \| Global XYZ | 0.039 | 0.012 | -0.005 | 0.000 | 0.000 | 0.000 |
| 205 | 1422 | 0 \| Global XYZ | 0.022 | 0.009 | 0.002 | 0.000 | 0.000 | 0.000 |
| 206 | 1424 | 0 \| Global XYZ | 0.024 | 0.035 | -0.004 | 0.000 | 0.000 | 0.000 |
| 207 | 1425 | 0 \| Global XYZ | 0.022 | 0.026 | 0.000 | 0.000 | 0.000 | 0.000 |
| 208 | 1426 | 0 \| Global XYZ | 0.015 | 0.026 | 0.000 | 0.000 | 0.000 | 0.000 |
| 209 | 1427 | 0 \| Global XYZ | 0.014 | 0.019 | 0.000 | 0.000 | 0.000 | 0.000 |
| 210 | 1428 | 0 \| Global XYZ | 0.013 | 0.012 | 0.000 | 0.000 | 0.000 | 0.000 |
| 211 | 1431 | 0 \| Global XYZ | 0.013 | 0.005 | -0.001 | 0.000 | 0.000 | 0.000 |
| 212 | 1432 | 0 \| Global XYZ | 0.013 | 0.006 | 0.000 | 0.000 | 0.000 | 0.000 |

## 3.1 NODAL LOADS - BY COMPONENTS - COORDINATE SYSTEM

LC17

**LC17**
Ersatzlasten aus
Eigenform Nr. 9 - 2.08 Hz

| No. | On Nodes No. | Coordinate System | Force [kN] $P_X$ / $P_U$ | $P_Y$ / $P_V$ | $P_Z$ / $P_W$ | Moment [kNm] $M_X$ / $M_U$ | $M_Y$ / $M_V$ | $M_Z$ / $M_W$ |
|---|---|---|---|---|---|---|---|---|
| 1 | 30 | 0 \| Global XYZ | 0.002 | 0.008 | -0.001 | 0.000 | 0.000 | 0.000 |
| 2 | 31 | 0 \| Global XYZ | 0.000 | 0.014 | 0.001 | 0.000 | 0.000 | 0.000 |
| 3 | 32 | 0 \| Global XYZ | 0.002 | -0.002 | 0.000 | 0.000 | 0.000 | 0.000 |
| 4 | 33 | 0 \| Global XYZ | 0.011 | 0.073 | -0.005 | 0.000 | 0.000 | 0.000 |
| 5 | 34 | 0 \| Global XYZ | 0.003 | -0.001 | 0.000 | 0.000 | 0.000 | 0.000 |
| 6 | 35 | 0 \| Global XYZ | 0.002 | 0.002 | 0.000 | 0.000 | 0.000 | 0.000 |
| 7 | 36 | 0 \| Global XYZ | 0.002 | 0.004 | 0.000 | 0.000 | 0.000 | 0.000 |
| 8 | 37 | 0 \| Global XYZ | 0.000 | 0.004 | 0.000 | 0.000 | 0.000 | 0.000 |
| 9 | 38 | 0 \| Global XYZ | -0.005 | -0.005 | 0.000 | 0.000 | 0.000 | 0.000 |
| 10 | 39 | 0 \| Global XYZ | -0.002 | 0.000 | -0.001 | 0.000 | 0.000 | 0.000 |
| 11 | 40 | 0 \| Global XYZ | 0.001 | 0.006 | 0.000 | 0.000 | 0.000 | 0.000 |
| 12 | 41 | 0 \| Global XYZ | 0.003 | 0.001 | 0.000 | 0.000 | 0.000 | 0.000 |
| 13 | 42 | 0 \| Global XYZ | 0.004 | 0.006 | 0.000 | 0.000 | 0.000 | 0.000 |
| 14 | 43 | 0 \| Global XYZ | 0.005 | -0.010 | 0.000 | 0.000 | 0.000 | 0.000 |
| 15 | 44 | 0 \| Global XYZ | 0.002 | 0.012 | 0.000 | 0.000 | 0.000 | 0.000 |
| 16 | 45 | 0 \| Global XYZ | 0.013 | 0.058 | -0.001 | 0.000 | 0.000 | 0.000 |
| 17 | 46 | 0 \| Global XYZ | 0.002 | -0.111 | 0.000 | 0.000 | 0.000 | 0.000 |
| 18 | 47 | 0 \| Global XYZ | -0.107 | 0.075 | 0.000 | 0.000 | 0.000 | 0.000 |
| 19 | 48 | 0 \| Global XYZ | 0.064 | -0.014 | 0.000 | 0.000 | 0.000 | 0.000 |
| 20 | 49 | 0 \| Global XYZ | -0.018 | 0.070 | 0.000 | 0.000 | 0.000 | 0.000 |
| 21 | 50 | 0 \| Global XYZ | -0.032 | 0.093 | 0.000 | 0.000 | 0.000 | 0.000 |
| 22 | 51 | 0 \| Global XYZ | 0.023 | -0.010 | 0.000 | 0.000 | 0.000 | 0.000 |
| 23 | 52 | 0 \| Global XYZ | 0.027 | -0.074 | 0.000 | 0.000 | 0.000 | 0.000 |
| 24 | 53 | 0 \| Global XYZ | 0.139 | -0.030 | 0.000 | 0.000 | 0.000 | 0.000 |
| 25 | 54 | 0 \| Global XYZ | -0.003 | -0.038 | -0.001 | 0.000 | 0.000 | 0.000 |
| 26 | 55 | 0 \| Global XYZ | 0.003 | -0.022 | 0.000 | 0.000 | 0.000 | 0.000 |
| 27 | 56 | 0 \| Global XYZ | 0.014 | -0.002 | 0.000 | 0.000 | 0.000 | 0.000 |
| 28 | 57 | 0 \| Global XYZ | -0.003 | -0.022 | 0.000 | 0.000 | 0.000 | 0.000 |
| 29 | 58 | 0 \| Global XYZ | 0.041 | -0.060 | 0.000 | 0.000 | 0.000 | 0.000 |
| 30 | 59 | 0 \| Global XYZ | 0.139 | -0.002 | 0.000 | 0.000 | 0.000 | 0.000 |
| 31 | 60 | 0 \| Global XYZ | -0.002 | -0.003 | 0.001 | 0.000 | 0.000 | 0.000 |
| 32 | 61 | 0 \| Global XYZ | 0.003 | -0.002 | 0.001 | 0.000 | 0.000 | 0.000 |
| 33 | 63 | 0 \| Global XYZ | 0.014 | 0.001 | 0.000 | 0.000 | 0.000 | 0.000 |
| 34 | 64 | 0 \| Global XYZ | 0.001 | 0.005 | 0.002 | 0.000 | 0.000 | 0.000 |
| 35 | 65 | 0 \| Global XYZ | -0.001 | 0.013 | 0.000 | 0.000 | 0.000 | 0.000 |
| 36 | 66 | 0 \| Global XYZ | 0.040 | -0.006 | 0.000 | 0.000 | 0.000 | 0.000 |
| 37 | 68 | 0 \| Global XYZ | 0.139 | 0.007 | -0.001 | 0.000 | 0.000 | 0.000 |
| 38 | 74 | 0 \| Global XYZ | -0.001 | 0.002 | 0.000 | 0.000 | 0.000 | 0.000 |
| 39 | 78 | 0 \| Global XYZ | 0.027 | 0.065 | 0.000 | 0.000 | 0.000 | 0.000 |
| 40 | 79 | 0 \| Global XYZ | 0.000 | 0.067 | 0.000 | 0.000 | 0.000 | 0.000 |
| 41 | 80 | 0 \| Global XYZ | 0.019 | -0.077 | 0.000 | 0.000 | 0.000 | 0.000 |
| 42 | 81 | 0 \| Global XYZ | 0.000 | 0.002 | 0.000 | 0.000 | 0.000 | 0.000 |
| 43 | 82 | 0 \| Global XYZ | 0.009 | 0.060 | 0.000 | 0.000 | 0.000 | 0.000 |
| 44 | 83 | 0 \| Global XYZ | 0.002 | 0.000 | 0.000 | 0.000 | 0.000 | 0.000 |
| 45 | 84 | 0 \| Global XYZ | 0.062 | 0.017 | 0.000 | 0.000 | 0.000 | 0.000 |
| 46 | 85 | 0 \| Global XYZ | 0.000 | 0.024 | 0.001 | 0.000 | 0.000 | 0.000 |
| 47 | 86 | 0 \| Global XYZ | 0.019 | -0.037 | 0.000 | 0.000 | 0.000 | 0.000 |
| 48 | 87 | 0 \| Global XYZ | 0.139 | 0.011 | 0.003 | 0.000 | 0.000 | 0.000 |
| 49 | 89 | 0 \| Global XYZ | 0.040 | 0.046 | 0.000 | 0.000 | 0.000 | 0.000 |
| 50 | 92 | 0 \| Global XYZ | -0.002 | 0.002 | 0.000 | 0.000 | 0.000 | 0.000 |
| 51 | 93 | 0 \| Global XYZ | -0.060 | 0.083 | 0.001 | 0.000 | 0.000 | 0.000 |
| 52 | 94 | 0 \| Global XYZ | 0.002 | -0.032 | 0.000 | 0.000 | 0.000 | 0.000 |
| 53 | 95 | 0 \| Global XYZ | 0.004 | -0.025 | 0.000 | 0.000 | 0.000 | 0.000 |
| 54 | 96 | 0 \| Global XYZ | 0.013 | 0.024 | 0.000 | 0.000 | 0.000 | 0.000 |
| 55 | 97 | 0 \| Global XYZ | 0.005 | 0.016 | 0.000 | 0.000 | 0.000 | 0.000 |
| 56 | 98 | 0 \| Global XYZ | -0.021 | -0.030 | 0.000 | 0.000 | 0.000 | 0.000 |
| 57 | 99 | 0 \| Global XYZ | 0.010 | 0.003 | 0.000 | 0.000 | 0.000 | 0.000 |
| 58 | 100 | 0 \| Global XYZ | 0.005 | 0.003 | 0.000 | 0.000 | 0.000 | 0.000 |
| 59 | 101 | 0 \| Global XYZ | -0.022 | -0.079 | 0.004 | 0.000 | 0.000 | 0.000 |
| 60 | 102 | 0 \| Global XYZ | -0.022 | 0.020 | -0.002 | 0.000 | 0.000 | 0.000 |
| 61 | 103 | 0 \| Global XYZ | -0.001 | 0.001 | 0.000 | 0.000 | 0.000 | 0.000 |

## 3.1 NODAL LOADS - BY COMPONENTS - COORDINATE SYSTEM

LC17

| No. | On Nodes No. | Coordinate System | Force [kN] $P_X$ / $P_U$ | $P_Y$ / $P_V$ | $P_Z$ / $P_W$ | Moment [kNm] $M_X$ / $M_U$ | $M_Y$ / $M_V$ | $M_Z$ / $M_W$ |
|---|---|---|---|---|---|---|---|---|
| 62 | 104 | 0 \| Global XYZ | 0.012 | 0.042 | 0.000 | 0.000 | 0.000 | 0.000 |
| 63 | 105 | 0 \| Global XYZ | -0.023 | 0.002 | 0.002 | 0.000 | 0.000 | 0.000 |
| 64 | 106 | 0 \| Global XYZ | 0.004 | 0.026 | 0.000 | 0.000 | 0.000 | 0.000 |
| 65 | 107 | 0 \| Global XYZ | -0.024 | 0.038 | 0.002 | 0.000 | 0.000 | 0.000 |
| 66 | 108 | 0 \| Global XYZ | -0.003 | 0.001 | 0.000 | 0.000 | 0.000 | 0.000 |
| 67 | 109 | 0 \| Global XYZ | 0.014 | 0.000 | 0.000 | 0.000 | 0.000 | 0.000 |
| 68 | 110 | 0 \| Global XYZ | 0.000 | 0.003 | 0.000 | 0.000 | 0.000 | 0.000 |
| 69 | 111 | 0 \| Global XYZ | 0.002 | 0.001 | 0.000 | 0.000 | 0.000 | 0.000 |
| 70 | 112 | 0 \| Global XYZ | 0.002 | 0.003 | 0.000 | 0.000 | 0.000 | 0.000 |
| 71 | 113 | 0 \| Global XYZ | 0.001 | 0.005 | 0.000 | 0.000 | 0.000 | 0.000 |
| 72 | 114 | 0 \| Global XYZ | 0.000 | 0.009 | 0.000 | 0.000 | 0.000 | 0.000 |
| 73 | 214 | 0 \| Global XYZ | 0.002 | 0.015 | 0.000 | 0.000 | 0.000 | 0.000 |
| 74 | 270 | 0 \| Global XYZ | 0.002 | 0.002 | 0.000 | 0.000 | 0.000 | 0.000 |
| 75 | 271 | 0 \| Global XYZ | 0.002 | 0.008 | 0.000 | 0.000 | 0.000 | 0.000 |
| 76 | 272 | 0 \| Global XYZ | 0.003 | -0.014 | 0.000 | 0.000 | 0.000 | 0.000 |
| 77 | 273 | 0 \| Global XYZ | 0.002 | -0.024 | 0.000 | 0.000 | 0.000 | 0.000 |
| 78 | 274 | 0 \| Global XYZ | 0.025 | -0.141 | -0.001 | 0.000 | 0.000 | 0.000 |
| 79 | 275 | 0 \| Global XYZ | -0.002 | -0.016 | -0.002 | 0.000 | 0.000 | 0.000 |
| 80 | 276 | 0 \| Global XYZ | 0.042 | -0.124 | 0.000 | 0.000 | 0.000 | 0.000 |
| 81 | 277 | 0 \| Global XYZ | -0.004 | -0.015 | -0.001 | 0.000 | 0.000 | 0.000 |
| 82 | 278 | 0 \| Global XYZ | 0.041 | -0.013 | 0.001 | 0.000 | 0.000 | 0.000 |
| 83 | 279 | 0 \| Global XYZ | 0.000 | 0.000 | 0.000 | 0.000 | 0.000 | 0.000 |
| 84 | 281 | 0 \| Global XYZ | -0.003 | -0.002 | 0.001 | 0.000 | 0.000 | 0.000 |
| 85 | 282 | 0 \| Global XYZ | 0.040 | 0.097 | -0.001 | 0.000 | 0.000 | 0.000 |
| 86 | 283 | 0 \| Global XYZ | -0.003 | 0.012 | 0.000 | 0.000 | 0.000 | 0.000 |
| 87 | 284 | 0 \| Global XYZ | -0.007 | -0.087 | 0.000 | 0.000 | 0.000 | 0.000 |
| 88 | 285 | 0 \| Global XYZ | -0.012 | -0.080 | 0.000 | 0.000 | 0.000 | 0.000 |
| 89 | 286 | 0 \| Global XYZ | -0.012 | -0.008 | 0.000 | 0.000 | 0.000 | 0.000 |
| 90 | 287 | 0 \| Global XYZ | -0.012 | 0.062 | 0.000 | 0.000 | 0.000 | 0.000 |
| 91 | 289 | 0 \| Global XYZ | -0.002 | 0.017 | 0.003 | 0.000 | 0.000 | 0.000 |
| 92 | 290 | 0 \| Global XYZ | -0.009 | 0.098 | 0.000 | 0.000 | 0.000 | 0.000 |
| 93 | 291 | 0 \| Global XYZ | 0.000 | 0.001 | 0.000 | 0.000 | 0.000 | 0.000 |
| 94 | 292 | 0 \| Global XYZ | 0.000 | 0.003 | 0.001 | 0.000 | 0.000 | 0.000 |
| 95 | 302 | 0 \| Global XYZ | 0.000 | -0.002 | 0.000 | 0.000 | 0.000 | 0.000 |
| 96 | 303 | 0 \| Global XYZ | 0.000 | -0.001 | 0.000 | 0.000 | 0.000 | 0.000 |
| 97 | 304 | 0 \| Global XYZ | 0.000 | 0.000 | 0.000 | 0.000 | 0.000 | 0.000 |
| 98 | 305 | 0 \| Global XYZ | 0.000 | 0.000 | 0.000 | 0.000 | 0.000 | 0.000 |
| 99 | 342 | 0 \| Global XYZ | 0.003 | 0.077 | 0.000 | 0.000 | 0.000 | 0.000 |
| 100 | 974 | 0 \| Global XYZ | -0.005 | 0.069 | 0.000 | 0.000 | 0.000 | 0.000 |
| 101 | 975 | 0 \| Global XYZ | 0.030 | 0.145 | 0.000 | 0.000 | 0.000 | 0.000 |
| 102 | 1008 | 0 \| Global XYZ | -0.001 | 0.013 | 0.001 | 0.000 | 0.000 | 0.000 |
| 103 | 1011 | 0 \| Global XYZ | 0.006 | 0.012 | 0.000 | 0.000 | 0.000 | 0.000 |
| 104 | 1017 | 0 \| Global XYZ | 0.006 | 0.028 | 0.006 | 0.000 | 0.000 | 0.000 |
| 105 | 1082 | 0 \| Global XYZ | 0.139 | 0.019 | 0.004 | 0.000 | 0.000 | 0.000 |
| 106 | 1083 | 0 \| Global XYZ | 0.139 | 0.003 | 0.000 | 0.000 | 0.000 | 0.000 |
| 107 | 1084 | 0 \| Global XYZ | 0.139 | 0.010 | 0.000 | 0.000 | 0.000 | 0.000 |
| 108 | 1085 | 0 \| Global XYZ | 0.139 | -0.017 | 0.000 | 0.000 | 0.000 | 0.000 |
| 109 | 1086 | 0 \| Global XYZ | 0.074 | -0.022 | 0.000 | 0.000 | 0.000 | 0.000 |
| 110 | 1087 | 0 \| Global XYZ | 0.001 | 0.024 | 0.000 | 0.000 | 0.000 | 0.000 |
| 111 | 1125 | 0 \| Global XYZ | 0.005 | 0.079 | 0.000 | 0.000 | 0.000 | 0.000 |
| 112 | 1126 | 0 \| Global XYZ | 0.000 | 0.013 | 0.000 | 0.000 | 0.000 | 0.000 |
| 113 | 1127 | 0 \| Global XYZ | 0.001 | 0.008 | -0.001 | 0.000 | 0.000 | 0.000 |
| 114 | 1129 | 0 \| Global XYZ | 0.003 | 0.014 | 0.001 | 0.000 | 0.000 | 0.000 |
| 115 | 1130 | 0 \| Global XYZ | 0.002 | 0.009 | 0.002 | 0.000 | 0.000 | 0.000 |
| 116 | 1139 | 0 \| Global XYZ | 0.000 | 0.002 | 0.000 | 0.000 | 0.000 | 0.000 |
| 117 | 1142 | 0 \| Global XYZ | 0.001 | -0.074 | 0.000 | 0.000 | 0.000 | 0.000 |
| 118 | 1144 | 0 \| Global XYZ | 0.070 | 0.011 | 0.001 | 0.000 | 0.000 | 0.000 |
| 119 | 1290 | 0 \| Global XYZ | 0.004 | 0.044 | 0.000 | 0.000 | 0.000 | 0.000 |
| 120 | 1291 | 0 \| Global XYZ | 0.004 | -0.037 | 0.000 | 0.000 | 0.000 | 0.000 |
| 121 | 1303 | 0 \| Global XYZ | -0.162 | -0.004 | -0.002 | 0.000 | 0.000 | 0.000 |
| 122 | 1305 | 0 \| Global XYZ | -0.134 | -0.058 | -0.002 | 0.000 | 0.000 | 0.000 |
| 123 | 1306 | 0 \| Global XYZ | -0.138 | 0.070 | -0.004 | 0.000 | 0.000 | 0.000 |
| 124 | 1307 | 0 \| Global XYZ | -0.007 | 0.020 | 0.000 | 0.000 | 0.000 | 0.000 |
| 125 | 1308 | 0 \| Global XYZ | -0.116 | 0.008 | -0.003 | 0.000 | 0.000 | 0.000 |
| 126 | 1309 | 0 \| Global XYZ | -0.001 | 0.017 | 0.000 | 0.000 | 0.000 | 0.000 |
| 127 | 1311 | 0 \| Global XYZ | -0.063 | -0.134 | 0.002 | 0.000 | 0.000 | 0.000 |
| 128 | 1312 | 0 \| Global XYZ | -0.002 | -0.114 | 0.003 | 0.000 | 0.000 | 0.000 |
| 129 | 1313 | 0 \| Global XYZ | 0.016 | 0.000 | 0.000 | 0.000 | 0.000 | 0.000 |
| 130 | 1315 | 0 \| Global XYZ | -0.099 | -0.114 | -0.003 | 0.000 | 0.000 | 0.000 |
| 131 | 1316 | 0 \| Global XYZ | -0.156 | -0.038 | -0.006 | 0.000 | 0.000 | 0.000 |
| 132 | 1317 | 0 \| Global XYZ | -0.022 | 0.021 | 0.000 | 0.000 | 0.000 | 0.000 |
| 133 | 1320 | 0 \| Global XYZ | -0.138 | -0.034 | 0.005 | 0.000 | 0.000 | 0.000 |
| 134 | 1321 | 0 \| Global XYZ | -0.101 | -0.081 | 0.008 | 0.000 | 0.000 | 0.000 |
| 135 | 1322 | 0 \| Global XYZ | 0.004 | -0.018 | 0.000 | 0.000 | 0.000 | 0.000 |
| 136 | 1323 | 0 \| Global XYZ | -0.116 | -0.014 | -0.001 | 0.000 | 0.000 | 0.000 |
| 137 | 1324 | 0 \| Global XYZ | -0.086 | -0.032 | -0.001 | 0.000 | 0.000 | 0.000 |
| 138 | 1325 | 0 \| Global XYZ | 0.003 | -0.007 | 0.000 | 0.000 | 0.000 | 0.000 |
| 139 | 1326 | 0 \| Global XYZ | -0.089 | 0.009 | 0.003 | 0.000 | 0.000 | 0.000 |
| 140 | 1327 | 0 \| Global XYZ | -0.070 | 0.021 | 0.002 | 0.000 | 0.000 | 0.000 |
| 141 | 1328 | 0 \| Global XYZ | 0.000 | 0.005 | 0.000 | 0.000 | 0.000 | 0.000 |
| 142 | 1329 | 0 \| Global XYZ | -0.078 | 0.001 | -0.003 | 0.000 | 0.000 | 0.000 |
| 143 | 1330 | 0 \| Global XYZ | -0.063 | 0.002 | -0.002 | 0.000 | 0.000 | 0.000 |
| 144 | 1331 | 0 \| Global XYZ | -0.001 | 0.001 | 0.000 | 0.000 | 0.000 | 0.000 |
| 145 | 1332 | 0 \| Global XYZ | -0.116 | 0.018 | 0.003 | 0.000 | 0.000 | 0.000 |
| 146 | 1333 | 0 \| Global XYZ | -0.075 | 0.040 | 0.004 | 0.000 | 0.000 | 0.000 |
| 147 | 1335 | 0 \| Global XYZ | 0.001 | 0.007 | 0.000 | 0.000 | 0.000 | 0.000 |
| 148 | 1336 | 0 \| Global XYZ | -0.037 | 0.069 | -0.002 | 0.000 | 0.000 | 0.000 |
| 149 | 1337 | 0 \| Global XYZ | -0.027 | 0.045 | -0.001 | 0.000 | 0.000 | 0.000 |
| 150 | 1338 | 0 \| Global XYZ | 0.039 | -0.027 | 0.001 | 0.000 | 0.000 | 0.000 |
| 151 | 1339 | 0 \| Global XYZ | -0.090 | 0.039 | -0.003 | 0.000 | 0.000 | 0.000 |
| 152 | 1340 | 0 \| Global XYZ | 0.039 | -0.185 | -0.001 | 0.000 | 0.000 | 0.000 |
| 153 | 1341 | 0 \| Global XYZ | 0.039 | -0.150 | 0.001 | 0.000 | 0.000 | 0.000 |

## 3.1 NODAL LOADS - BY COMPONENTS - COORDINATE SYSTEM

LC17

| No. | On Nodes No. | Coordinate System | Force [kN] $P_X$ / $P_U$ | $P_Y$ / $P_V$ | $P_Z$ / $P_W$ | Moment [kNm] $M_X$ / $M_U$ | $M_Y$ / $M_V$ | $M_Z$ / $M_W$ |
|---|---|---|---|---|---|---|---|---|
| 154 | 1342 | 0 \| Global XYZ | -0.011 | -0.099 | 0.005 | 0.000 | 0.000 | 0.000 |
| 155 | 1343 | 0 \| Global XYZ | 0.039 | -0.081 | -0.002 | 0.000 | 0.000 | 0.000 |
| 156 | 1344 | 0 \| Global XYZ | -0.011 | -0.121 | 0.027 | 0.000 | 0.000 | 0.000 |
| 157 | 1345 | 0 \| Global XYZ | 0.034 | -0.080 | 0.002 | 0.000 | 0.000 | 0.000 |
| 158 | 1346 | 0 \| Global XYZ | 0.034 | -0.065 | 0.000 | 0.000 | 0.000 | 0.000 |
| 159 | 1347 | 0 \| Global XYZ | 0.038 | -0.046 | -0.001 | 0.000 | 0.000 | 0.000 |
| 160 | 1348 | 0 \| Global XYZ | -0.011 | -0.030 | -0.011 | 0.000 | 0.000 | 0.000 |
| 161 | 1349 | 0 \| Global XYZ | -0.011 | -0.053 | 0.004 | 0.000 | 0.000 | 0.000 |
| 162 | 1350 | 0 \| Global XYZ | 0.034 | -0.035 | 0.002 | 0.000 | 0.000 | 0.000 |
| 163 | 1351 | 0 \| Global XYZ | 0.034 | -0.020 | 0.001 | 0.000 | 0.000 | 0.000 |
| 164 | 1352 | 0 \| Global XYZ | 0.038 | 0.022 | 0.001 | 0.000 | 0.000 | 0.000 |
| 165 | 1353 | 0 \| Global XYZ | 0.038 | 0.056 | -0.001 | 0.000 | 0.000 | 0.000 |
| 166 | 1354 | 0 \| Global XYZ | -0.011 | 0.037 | -0.014 | 0.000 | 0.000 | 0.000 |
| 167 | 1355 | 0 \| Global XYZ | -0.011 | 0.014 | 0.005 | 0.000 | 0.000 | 0.000 |
| 168 | 1356 | 0 \| Global XYZ | 0.034 | 0.009 | 0.001 | 0.000 | 0.000 | 0.000 |
| 169 | 1357 | 0 \| Global XYZ | 0.033 | 0.024 | 0.001 | 0.000 | 0.000 | 0.000 |
| 170 | 1358 | 0 \| Global XYZ | 0.037 | 0.124 | -0.001 | 0.000 | 0.000 | 0.000 |
| 171 | 1359 | 0 \| Global XYZ | 0.033 | 0.140 | -0.001 | 0.000 | 0.000 | 0.000 |
| 172 | 1360 | 0 \| Global XYZ | -0.010 | 0.092 | 0.013 | 0.000 | 0.000 | 0.000 |
| 173 | 1361 | 0 \| Global XYZ | -0.011 | 0.081 | 0.025 | 0.000 | 0.000 | 0.000 |
| 174 | 1362 | 0 \| Global XYZ | 0.033 | 0.053 | -0.001 | 0.000 | 0.000 | 0.000 |
| 175 | 1363 | 0 \| Global XYZ | 0.029 | 0.060 | -0.002 | 0.000 | 0.000 | 0.000 |
| 176 | 1364 | 0 \| Global XYZ | -0.009 | 0.109 | -0.002 | 0.000 | 0.000 | 0.000 |
| 177 | 1365 | 0 \| Global XYZ | 0.029 | 0.164 | -0.003 | 0.000 | 0.000 | 0.000 |
| 178 | 1366 | 0 \| Global XYZ | -0.004 | -0.024 | -0.004 | 0.000 | 0.000 | 0.000 |
| 179 | 1367 | 0 \| Global XYZ | 0.025 | 0.069 | 0.000 | 0.000 | 0.000 | 0.000 |
| 180 | 1371 | 0 \| Global XYZ | 0.007 | 0.023 | 0.000 | 0.000 | 0.000 | 0.000 |
| 181 | 1372 | 0 \| Global XYZ | 0.002 | 0.008 | 0.000 | 0.000 | 0.000 | 0.000 |
| 182 | 1379 | 0 \| Global XYZ | 0.010 | -0.030 | 0.000 | 0.000 | 0.000 | 0.000 |
| 183 | 1396 | 0 \| Global XYZ | -0.004 | -0.020 | -0.004 | 0.000 | 0.000 | 0.000 |
| 184 | 1397 | 0 \| Global XYZ | 0.013 | 0.041 | -0.001 | 0.000 | 0.000 | 0.000 |
| 185 | 1398 | 0 \| Global XYZ | -0.004 | -0.011 | 0.000 | 0.000 | 0.000 | 0.000 |
| 186 | 1399 | 0 \| Global XYZ | -0.003 | -0.006 | 0.001 | 0.000 | 0.000 | 0.000 |
| 187 | 1400 | 0 \| Global XYZ | -0.003 | 0.003 | 0.000 | 0.000 | 0.000 | 0.000 |
| 188 | 1401 | 0 \| Global XYZ | -0.003 | 0.007 | -0.001 | 0.000 | 0.000 | 0.000 |
| 189 | 1402 | 0 \| Global XYZ | -0.003 | 0.016 | 0.002 | 0.000 | 0.000 | 0.000 |
| 190 | 1403 | 0 \| Global XYZ | -0.003 | 0.019 | 0.004 | 0.000 | 0.000 | 0.000 |
| 191 | 1404 | 0 \| Global XYZ | -0.003 | 0.021 | 0.003 | 0.000 | 0.000 | 0.000 |
| 192 | 1405 | 0 \| Global XYZ | -0.002 | -0.036 | -0.001 | 0.000 | 0.000 | 0.000 |
| 193 | 1410 | 0 \| Global XYZ | 0.001 | -0.014 | 0.000 | 0.000 | 0.000 | 0.000 |
| 194 | 1411 | 0 \| Global XYZ | 0.005 | -0.022 | 0.000 | 0.000 | 0.000 | 0.000 |
| 195 | 1412 | 0 \| Global XYZ | 0.002 | 0.007 | 0.000 | 0.000 | 0.000 | 0.000 |
| 196 | 1413 | 0 \| Global XYZ | 0.004 | -0.011 | 0.000 | 0.000 | 0.000 | 0.000 |
| 197 | 1414 | 0 \| Global XYZ | 0.002 | -0.004 | 0.000 | 0.000 | 0.000 | 0.000 |
| 198 | 1415 | 0 \| Global XYZ | 0.003 | -0.031 | 0.000 | 0.000 | 0.000 | 0.000 |
| 199 | 1416 | 0 \| Global XYZ | 0.003 | -0.003 | 0.002 | 0.000 | 0.000 | 0.000 |
| 200 | 1417 | 0 \| Global XYZ | 0.008 | -0.003 | 0.001 | 0.000 | 0.000 | 0.000 |
| 201 | 1418 | 0 \| Global XYZ | 0.003 | 0.007 | 0.000 | 0.000 | 0.000 | 0.000 |
| 202 | 1419 | 0 \| Global XYZ | 0.005 | 0.006 | 0.000 | 0.000 | 0.000 | 0.000 |
| 203 | 1420 | 0 \| Global XYZ | 0.003 | 0.011 | -0.002 | 0.000 | 0.000 | 0.000 |
| 204 | 1421 | 0 \| Global XYZ | 0.006 | 0.010 | -0.001 | 0.000 | 0.000 | 0.000 |
| 205 | 1422 | 0 \| Global XYZ | 0.002 | 0.009 | 0.002 | 0.000 | 0.000 | 0.000 |
| 206 | 1424 | 0 \| Global XYZ | 0.003 | 0.012 | 0.000 | 0.000 | 0.000 | 0.000 |
| 207 | 1425 | 0 \| Global XYZ | 0.004 | 0.008 | 0.000 | 0.000 | 0.000 | 0.000 |
| 208 | 1426 | 0 \| Global XYZ | 0.001 | 0.009 | -0.001 | 0.000 | 0.000 | 0.000 |
| 209 | 1427 | 0 \| Global XYZ | 0.002 | 0.006 | 0.000 | 0.000 | 0.000 | 0.000 |
| 210 | 1428 | 0 \| Global XYZ | 0.002 | 0.004 | 0.000 | 0.000 | 0.000 | 0.000 |
| 211 | 1431 | 0 \| Global XYZ | 0.002 | 0.004 | 0.000 | 0.000 | 0.000 | 0.000 |
| 212 | 1432 | 0 \| Global XYZ | 0.001 | 0.005 | 0.000 | 0.000 | 0.000 | 0.000 |

## 3.1 NODAL LOADS - BY COMPONENTS - COORDINATE SYSTEM

LC18

**LC18**
Ersatzlasten aus
Eigenform Nr. 10 - 2.26 Hz

| No. | On Nodes No. | Coordinate System | Force [kN] $P_X$ / $P_U$ | $P_Y$ / $P_V$ | $P_Z$ / $P_W$ | Moment [kNm] $M_X$ / $M_U$ | $M_Y$ / $M_V$ | $M_Z$ / $M_W$ |
|---|---|---|---|---|---|---|---|---|
| 1 | 30 | 0 \| Global XYZ | 0.000 | 0.000 | 0.000 | 0.000 | 0.000 | 0.000 |
| 2 | 31 | 0 \| Global XYZ | 0.000 | 0.000 | 0.000 | 0.000 | 0.000 | 0.000 |
| 3 | 32 | 0 \| Global XYZ | 0.000 | 0.000 | 0.000 | 0.000 | 0.000 | 0.000 |
| 4 | 33 | 0 \| Global XYZ | 0.000 | 0.000 | 0.000 | 0.000 | 0.000 | 0.000 |
| 5 | 34 | 0 \| Global XYZ | 0.000 | 0.000 | 0.000 | 0.000 | 0.000 | 0.000 |
| 6 | 35 | 0 \| Global XYZ | 0.000 | 0.000 | 0.000 | 0.000 | 0.000 | 0.000 |
| 7 | 36 | 0 \| Global XYZ | 0.000 | 0.000 | 0.000 | 0.000 | 0.000 | 0.000 |
| 8 | 37 | 0 \| Global XYZ | 0.000 | 0.000 | 0.000 | 0.000 | 0.000 | 0.000 |
| 9 | 38 | 0 \| Global XYZ | 0.000 | 0.000 | 0.000 | 0.000 | 0.000 | 0.000 |
| 10 | 39 | 0 \| Global XYZ | 0.003 | -0.001 | 0.049 | 0.000 | 0.000 | 0.000 |
| 11 | 40 | 0 \| Global XYZ | 0.000 | 0.000 | 0.000 | 0.000 | 0.000 | 0.000 |
| 12 | 41 | 0 \| Global XYZ | 0.000 | 0.000 | 0.000 | 0.000 | 0.000 | 0.000 |
| 13 | 42 | 0 \| Global XYZ | 0.000 | 0.000 | 0.000 | 0.000 | 0.000 | 0.000 |
| 14 | 43 | 0 \| Global XYZ | 0.000 | 0.000 | 0.000 | 0.000 | 0.000 | 0.000 |
| 15 | 44 | 0 \| Global XYZ | 0.000 | 0.000 | 0.000 | 0.000 | 0.000 | 0.000 |
| 16 | 45 | 0 \| Global XYZ | 0.000 | 0.000 | 0.000 | 0.000 | 0.000 | 0.000 |
| 17 | 46 | 0 \| Global XYZ | 0.000 | 0.000 | 0.000 | 0.000 | 0.000 | 0.000 |
| 18 | 47 | 0 \| Global XYZ | -0.001 | 0.000 | 0.000 | 0.000 | 0.000 | 0.000 |
| 19 | 48 | 0 \| Global XYZ | 0.000 | 0.000 | 0.000 | 0.000 | 0.000 | 0.000 |
| 20 | 49 | 0 \| Global XYZ | 0.000 | 0.000 | 0.000 | 0.000 | 0.000 | 0.000 |
| 21 | 50 | 0 \| Global XYZ | 0.000 | 0.000 | 0.000 | 0.000 | 0.000 | 0.000 |
| 22 | 51 | 0 \| Global XYZ | 0.000 | 0.000 | 0.000 | 0.000 | 0.000 | 0.000 |
| 23 | 52 | 0 \| Global XYZ | 0.000 | 0.000 | 0.000 | 0.000 | 0.000 | 0.000 |
| 24 | 53 | 0 \| Global XYZ | 0.000 | 0.000 | 0.000 | 0.000 | 0.000 | 0.000 |

## 3.1 NODAL LOADS - BY COMPONENTS - COORDINATE SYSTEM

LC18

| No. | On Nodes No. | Coordinate System | Force [kN] $P_X$ / $P_U$ | $P_Y$ / $P_V$ | $P_Z$ / $P_W$ | Moment [kNm] $M_X$ / $M_U$ | $M_Y$ / $M_V$ | $M_Z$ / $M_W$ |
|---|---|---|---|---|---|---|---|---|
| 25 | 54 | 0 \| Global XYZ | 0.000 | 0.000 | 0.000 | 0.000 | 0.000 | 0.000 |
| 26 | 55 | 0 \| Global XYZ | 0.000 | 0.000 | 0.000 | 0.000 | 0.000 | 0.000 |
| 27 | 56 | 0 \| Global XYZ | 0.000 | 0.000 | 0.000 | 0.000 | 0.000 | 0.000 |
| 28 | 57 | 0 \| Global XYZ | 0.000 | 0.000 | 0.000 | 0.000 | 0.000 | 0.000 |
| 29 | 58 | 0 \| Global XYZ | 0.000 | 0.000 | 0.000 | 0.000 | 0.000 | 0.000 |
| 30 | 59 | 0 \| Global XYZ | 0.000 | 0.000 | 0.000 | 0.000 | 0.000 | 0.000 |
| 31 | 60 | 0 \| Global XYZ | 0.000 | 0.000 | 0.000 | 0.000 | 0.000 | 0.000 |
| 32 | 61 | 0 \| Global XYZ | 0.000 | 0.000 | 0.000 | 0.000 | 0.000 | 0.000 |
| 33 | 63 | 0 \| Global XYZ | 0.000 | 0.000 | 0.000 | 0.000 | 0.000 | 0.000 |
| 34 | 64 | 0 \| Global XYZ | 0.000 | 0.000 | 0.000 | 0.000 | 0.000 | 0.000 |
| 35 | 65 | 0 \| Global XYZ | 0.000 | 0.000 | 0.000 | 0.000 | 0.000 | 0.000 |
| 36 | 66 | 0 \| Global XYZ | 0.000 | 0.000 | 0.000 | 0.000 | 0.000 | 0.000 |
| 37 | 68 | 0 \| Global XYZ | 0.000 | 0.000 | 0.000 | 0.000 | 0.000 | 0.000 |
| 38 | 74 | 0 \| Global XYZ | 0.000 | 0.000 | 0.000 | 0.000 | 0.000 | 0.000 |
| 39 | 78 | 0 \| Global XYZ | 0.000 | 0.000 | 0.000 | 0.000 | 0.000 | 0.000 |
| 40 | 79 | 0 \| Global XYZ | 0.000 | 0.000 | 0.000 | 0.000 | 0.000 | 0.000 |
| 41 | 80 | 0 \| Global XYZ | 0.000 | 0.000 | 0.000 | 0.000 | 0.000 | 0.000 |
| 42 | 81 | 0 \| Global XYZ | 0.000 | 0.000 | 0.000 | 0.000 | 0.000 | 0.000 |
| 43 | 82 | 0 \| Global XYZ | 0.000 | 0.000 | 0.000 | 0.000 | 0.000 | 0.000 |
| 44 | 83 | 0 \| Global XYZ | 0.000 | 0.000 | 0.000 | 0.000 | 0.000 | 0.000 |
| 45 | 84 | 0 \| Global XYZ | 0.000 | 0.000 | 0.000 | 0.000 | 0.000 | 0.000 |
| 46 | 85 | 0 \| Global XYZ | 0.000 | 0.000 | 0.000 | 0.000 | 0.000 | 0.000 |
| 47 | 86 | 0 \| Global XYZ | 0.000 | 0.000 | 0.000 | 0.000 | 0.000 | 0.000 |
| 48 | 87 | 0 \| Global XYZ | 0.000 | 0.000 | 0.000 | 0.000 | 0.000 | 0.000 |
| 49 | 89 | 0 \| Global XYZ | 0.000 | 0.000 | 0.000 | 0.000 | 0.000 | 0.000 |
| 50 | 92 | 0 \| Global XYZ | 0.000 | 0.000 | 0.000 | 0.000 | 0.000 | 0.000 |
| 51 | 93 | 0 \| Global XYZ | 0.000 | 0.000 | 0.000 | 0.000 | 0.000 | 0.000 |
| 52 | 94 | 0 \| Global XYZ | 0.000 | 0.000 | 0.000 | 0.000 | 0.000 | 0.000 |
| 53 | 95 | 0 \| Global XYZ | 0.000 | 0.000 | 0.000 | 0.000 | 0.000 | 0.000 |
| 54 | 96 | 0 \| Global XYZ | 0.000 | 0.000 | 0.000 | 0.000 | 0.000 | 0.000 |
| 55 | 97 | 0 \| Global XYZ | 0.000 | 0.000 | 0.000 | 0.000 | 0.000 | 0.000 |
| 56 | 98 | 0 \| Global XYZ | 0.000 | 0.000 | 0.000 | 0.000 | 0.000 | 0.000 |
| 57 | 99 | 0 \| Global XYZ | 0.000 | 0.000 | 0.000 | 0.000 | 0.000 | 0.000 |
| 58 | 100 | 0 \| Global XYZ | 0.000 | 0.000 | 0.000 | 0.000 | 0.000 | 0.000 |
| 59 | 101 | 0 \| Global XYZ | 0.000 | 0.000 | 0.000 | 0.000 | 0.000 | 0.000 |
| 60 | 102 | 0 \| Global XYZ | 0.000 | 0.000 | 0.000 | 0.000 | 0.000 | 0.000 |
| 61 | 103 | 0 \| Global XYZ | 0.000 | 0.000 | 0.000 | 0.000 | 0.000 | 0.000 |
| 62 | 104 | 0 \| Global XYZ | 0.000 | 0.000 | 0.000 | 0.000 | 0.000 | 0.000 |
| 63 | 105 | 0 \| Global XYZ | 0.000 | 0.000 | 0.000 | 0.000 | 0.000 | 0.000 |
| 64 | 106 | 0 \| Global XYZ | 0.000 | 0.000 | 0.000 | 0.000 | 0.000 | 0.000 |
| 65 | 107 | 0 \| Global XYZ | 0.000 | 0.000 | 0.000 | 0.000 | 0.000 | 0.000 |
| 66 | 108 | 0 \| Global XYZ | 0.000 | 0.000 | 0.000 | 0.000 | 0.000 | 0.000 |
| 67 | 109 | 0 \| Global XYZ | 0.000 | 0.000 | 0.000 | 0.000 | 0.000 | 0.000 |
| 68 | 110 | 0 \| Global XYZ | 0.000 | 0.000 | 0.000 | 0.000 | 0.000 | 0.000 |
| 69 | 111 | 0 \| Global XYZ | 0.000 | 0.000 | 0.000 | 0.000 | 0.000 | 0.000 |
| 70 | 112 | 0 \| Global XYZ | 0.000 | 0.000 | 0.000 | 0.000 | 0.000 | 0.000 |
| 71 | 113 | 0 \| Global XYZ | 0.000 | 0.000 | 0.000 | 0.000 | 0.000 | 0.000 |
| 72 | 114 | 0 \| Global XYZ | 0.000 | 0.000 | 0.000 | 0.000 | 0.000 | 0.000 |
| 73 | 214 | 0 \| Global XYZ | 0.000 | 0.000 | 0.000 | 0.000 | 0.000 | 0.000 |
| 74 | 270 | 0 \| Global XYZ | 0.000 | 0.000 | 0.000 | 0.000 | 0.000 | 0.000 |
| 75 | 271 | 0 \| Global XYZ | 0.000 | 0.000 | 0.000 | 0.000 | 0.000 | 0.000 |
| 76 | 272 | 0 \| Global XYZ | 0.000 | 0.000 | 0.000 | 0.000 | 0.000 | 0.000 |
| 77 | 273 | 0 \| Global XYZ | 0.000 | 0.000 | 0.000 | 0.000 | 0.000 | 0.000 |
| 78 | 274 | 0 \| Global XYZ | 0.000 | 0.000 | 0.000 | 0.000 | 0.000 | 0.000 |
| 79 | 275 | 0 \| Global XYZ | 0.000 | 0.000 | 0.000 | 0.000 | 0.000 | 0.000 |
| 80 | 276 | 0 \| Global XYZ | 0.000 | 0.000 | 0.000 | 0.000 | 0.000 | 0.000 |
| 81 | 277 | 0 \| Global XYZ | 0.000 | 0.000 | 0.000 | 0.000 | 0.000 | 0.000 |
| 82 | 278 | 0 \| Global XYZ | 0.000 | 0.000 | 0.000 | 0.000 | 0.000 | 0.000 |
| 83 | 281 | 0 \| Global XYZ | 0.000 | 0.000 | 0.000 | 0.000 | 0.000 | 0.000 |
| 84 | 282 | 0 \| Global XYZ | 0.000 | 0.000 | 0.000 | 0.000 | 0.000 | 0.000 |
| 85 | 283 | 0 \| Global XYZ | 0.000 | 0.000 | 0.000 | 0.000 | 0.000 | 0.000 |
| 86 | 284 | 0 \| Global XYZ | 0.000 | 0.000 | 0.000 | 0.000 | 0.000 | 0.000 |
| 87 | 285 | 0 \| Global XYZ | 0.000 | 0.000 | 0.000 | 0.000 | 0.000 | 0.000 |
| 88 | 286 | 0 \| Global XYZ | 0.000 | 0.000 | 0.000 | 0.000 | 0.000 | 0.000 |
| 89 | 287 | 0 \| Global XYZ | 0.000 | 0.000 | 0.000 | 0.000 | 0.000 | 0.000 |
| 90 | 289 | 0 \| Global XYZ | 0.000 | 0.000 | 0.000 | 0.000 | 0.000 | 0.000 |
| 91 | 290 | 0 \| Global XYZ | 0.000 | 0.000 | 0.000 | 0.000 | 0.000 | 0.000 |
| 92 | 291 | 0 \| Global XYZ | 0.000 | 0.000 | 0.000 | 0.000 | 0.000 | 0.000 |
| 93 | 292 | 0 \| Global XYZ | 0.000 | 0.000 | 0.000 | 0.000 | 0.000 | 0.000 |
| 94 | 302 | 0 \| Global XYZ | 0.000 | 0.000 | 0.000 | 0.000 | 0.000 | 0.000 |
| 95 | 342 | 0 \| Global XYZ | 0.000 | 0.000 | 0.000 | 0.000 | 0.000 | 0.000 |
| 96 | 974 | 0 \| Global XYZ | 0.000 | 0.000 | 0.000 | 0.000 | 0.000 | 0.000 |
| 97 | 975 | 0 \| Global XYZ | 0.000 | 0.000 | 0.000 | 0.000 | 0.000 | 0.000 |
| 98 | 1008 | 0 \| Global XYZ | 0.000 | 0.000 | 0.000 | 0.000 | 0.000 | 0.000 |
| 99 | 1011 | 0 \| Global XYZ | 0.000 | 0.000 | 0.000 | 0.000 | 0.000 | 0.000 |
| 100 | 1017 | 0 \| Global XYZ | 0.000 | 0.000 | 0.000 | 0.000 | 0.000 | 0.000 |
| 101 | 1082 | 0 \| Global XYZ | 0.000 | 0.000 | 0.000 | 0.000 | 0.000 | 0.000 |
| 102 | 1083 | 0 \| Global XYZ | 0.000 | 0.000 | 0.000 | 0.000 | 0.000 | 0.000 |
| 103 | 1084 | 0 \| Global XYZ | 0.000 | 0.000 | 0.000 | 0.000 | 0.000 | 0.000 |
| 104 | 1085 | 0 \| Global XYZ | 0.000 | 0.000 | 0.000 | 0.000 | 0.000 | 0.000 |
| 105 | 1086 | 0 \| Global XYZ | 0.000 | 0.000 | 0.000 | 0.000 | 0.000 | 0.000 |
| 106 | 1087 | 0 \| Global XYZ | 0.000 | 0.000 | 0.000 | 0.000 | 0.000 | 0.000 |
| 107 | 1125 | 0 \| Global XYZ | 0.000 | 0.000 | 0.000 | 0.000 | 0.000 | 0.000 |
| 108 | 1126 | 0 \| Global XYZ | 0.000 | 0.000 | 0.000 | 0.000 | 0.000 | 0.000 |
| 109 | 1127 | 0 \| Global XYZ | 0.000 | 0.000 | 0.000 | 0.000 | 0.000 | 0.000 |
| 110 | 1129 | 0 \| Global XYZ | 0.000 | 0.000 | 0.000 | 0.000 | 0.000 | 0.000 |
| 111 | 1130 | 0 \| Global XYZ | 0.000 | 0.000 | 0.000 | 0.000 | 0.000 | 0.000 |
| 112 | 1139 | 0 \| Global XYZ | 0.000 | 0.000 | 0.000 | 0.000 | 0.000 | 0.000 |
| 113 | 1142 | 0 \| Global XYZ | 0.000 | 0.000 | 0.000 | 0.000 | 0.000 | 0.000 |
| 114 | 1144 | 0 \| Global XYZ | 0.000 | 0.000 | 0.000 | 0.000 | 0.000 | 0.000 |
| 115 | 1290 | 0 \| Global XYZ | 0.000 | 0.000 | 0.000 | 0.000 | 0.000 | 0.000 |
| 116 | 1291 | 0 \| Global XYZ | 0.000 | 0.000 | 0.000 | 0.000 | 0.000 | 0.000 |

## 3.1 NODAL LOADS - BY COMPONENTS - COORDINATE SYSTEM

LC18

| No. | On Nodes No. | Coordinate System | Force [kN] $P_X$ / $P_U$ | $P_Y$ / $P_V$ | $P_Z$ / $P_W$ | Moment [kNm] $M_X$ / $M_U$ | $M_Y$ / $M_V$ | $M_Z$ / $M_W$ |
|---|---|---|---|---|---|---|---|---|
| 117 | 1303 | 0 \| Global XYZ | 0.000 | 0.000 | 0.000 | 0.000 | 0.000 | 0.000 |
| 118 | 1305 | 0 \| Global XYZ | 0.000 | 0.000 | 0.000 | 0.000 | 0.000 | 0.000 |
| 119 | 1306 | 0 \| Global XYZ | 0.000 | 0.000 | 0.000 | 0.000 | 0.000 | 0.000 |
| 120 | 1307 | 0 \| Global XYZ | 0.000 | 0.000 | 0.000 | 0.000 | 0.000 | 0.000 |
| 121 | 1308 | 0 \| Global XYZ | 0.000 | 0.000 | 0.000 | 0.000 | 0.000 | 0.000 |
| 122 | 1309 | 0 \| Global XYZ | 0.000 | 0.000 | 0.000 | 0.000 | 0.000 | 0.000 |
| 123 | 1311 | 0 \| Global XYZ | 0.000 | 0.000 | 0.000 | 0.000 | 0.000 | 0.000 |
| 124 | 1312 | 0 \| Global XYZ | -0.001 | 0.000 | 0.000 | 0.000 | 0.000 | 0.000 |
| 125 | 1313 | 0 \| Global XYZ | 0.000 | 0.000 | 0.000 | 0.000 | 0.000 | 0.000 |
| 126 | 1315 | 0 \| Global XYZ | 0.000 | 0.000 | 0.000 | 0.000 | 0.000 | 0.000 |
| 127 | 1316 | 0 \| Global XYZ | -0.001 | 0.000 | 0.000 | 0.000 | 0.000 | 0.000 |
| 128 | 1317 | 0 \| Global XYZ | 0.000 | 0.000 | 0.000 | 0.000 | 0.000 | 0.000 |
| 129 | 1320 | 0 \| Global XYZ | 0.000 | 0.000 | 0.000 | 0.000 | 0.000 | 0.000 |
| 130 | 1321 | 0 \| Global XYZ | 0.000 | 0.000 | 0.000 | 0.000 | 0.000 | 0.000 |
| 131 | 1322 | 0 \| Global XYZ | 0.000 | 0.000 | 0.000 | 0.000 | 0.000 | 0.000 |
| 132 | 1323 | 0 \| Global XYZ | 0.000 | 0.000 | 0.000 | 0.000 | 0.000 | 0.000 |
| 133 | 1324 | 0 \| Global XYZ | 0.000 | 0.000 | 0.000 | 0.000 | 0.000 | 0.000 |
| 134 | 1325 | 0 \| Global XYZ | 0.000 | 0.000 | 0.000 | 0.000 | 0.000 | 0.000 |
| 135 | 1326 | 0 \| Global XYZ | 0.000 | 0.000 | 0.000 | 0.000 | 0.000 | 0.000 |
| 136 | 1327 | 0 \| Global XYZ | 0.000 | 0.000 | 0.000 | 0.000 | 0.000 | 0.000 |
| 137 | 1328 | 0 \| Global XYZ | 0.000 | 0.000 | 0.000 | 0.000 | 0.000 | 0.000 |
| 138 | 1329 | 0 \| Global XYZ | 0.000 | 0.000 | 0.000 | 0.000 | 0.000 | 0.000 |
| 139 | 1330 | 0 \| Global XYZ | 0.000 | 0.000 | 0.000 | 0.000 | 0.000 | 0.000 |
| 140 | 1331 | 0 \| Global XYZ | 0.000 | 0.000 | 0.000 | 0.000 | 0.000 | 0.000 |
| 141 | 1332 | 0 \| Global XYZ | 0.000 | 0.000 | 0.000 | 0.000 | 0.000 | 0.000 |
| 142 | 1333 | 0 \| Global XYZ | 0.000 | 0.000 | 0.000 | 0.000 | 0.000 | 0.000 |
| 143 | 1335 | 0 \| Global XYZ | 0.000 | 0.000 | 0.000 | 0.000 | 0.000 | 0.000 |
| 144 | 1336 | 0 \| Global XYZ | 0.000 | 0.000 | 0.000 | 0.000 | 0.000 | 0.000 |
| 145 | 1337 | 0 \| Global XYZ | 0.000 | 0.000 | 0.000 | 0.000 | 0.000 | 0.000 |
| 146 | 1338 | 0 \| Global XYZ | 0.000 | 0.000 | 0.000 | 0.000 | 0.000 | 0.000 |
| 147 | 1339 | 0 \| Global XYZ | 0.000 | 0.000 | 0.000 | 0.000 | 0.000 | 0.000 |
| 148 | 1340 | 0 \| Global XYZ | 0.000 | 0.000 | 0.000 | 0.000 | 0.000 | 0.000 |
| 149 | 1341 | 0 \| Global XYZ | 0.000 | 0.000 | 0.000 | 0.000 | 0.000 | 0.000 |
| 150 | 1342 | 0 \| Global XYZ | 0.000 | 0.000 | 0.000 | 0.000 | 0.000 | 0.000 |
| 151 | 1343 | 0 \| Global XYZ | 0.000 | 0.000 | 0.000 | 0.000 | 0.000 | 0.000 |
| 152 | 1344 | 0 \| Global XYZ | 0.000 | 0.000 | 0.000 | 0.000 | 0.000 | 0.000 |
| 153 | 1345 | 0 \| Global XYZ | 0.000 | 0.000 | 0.000 | 0.000 | 0.000 | 0.000 |
| 154 | 1346 | 0 \| Global XYZ | 0.000 | 0.000 | 0.000 | 0.000 | 0.000 | 0.000 |
| 155 | 1347 | 0 \| Global XYZ | 0.000 | 0.000 | 0.000 | 0.000 | 0.000 | 0.000 |
| 156 | 1348 | 0 \| Global XYZ | 0.000 | 0.000 | 0.000 | 0.000 | 0.000 | 0.000 |
| 157 | 1349 | 0 \| Global XYZ | 0.000 | 0.000 | 0.000 | 0.000 | 0.000 | 0.000 |
| 158 | 1350 | 0 \| Global XYZ | 0.000 | 0.000 | 0.000 | 0.000 | 0.000 | 0.000 |
| 159 | 1351 | 0 \| Global XYZ | 0.000 | 0.000 | 0.000 | 0.000 | 0.000 | 0.000 |
| 160 | 1352 | 0 \| Global XYZ | 0.000 | 0.000 | 0.000 | 0.000 | 0.000 | 0.000 |
| 161 | 1353 | 0 \| Global XYZ | 0.000 | 0.000 | 0.000 | 0.000 | 0.000 | 0.000 |
| 162 | 1354 | 0 \| Global XYZ | 0.000 | 0.000 | 0.000 | 0.000 | 0.000 | 0.000 |
| 163 | 1355 | 0 \| Global XYZ | 0.000 | 0.000 | 0.000 | 0.000 | 0.000 | 0.000 |
| 164 | 1356 | 0 \| Global XYZ | 0.000 | 0.000 | 0.000 | 0.000 | 0.000 | 0.000 |
| 165 | 1357 | 0 \| Global XYZ | 0.000 | 0.000 | 0.000 | 0.000 | 0.000 | 0.000 |
| 166 | 1358 | 0 \| Global XYZ | 0.000 | 0.000 | 0.000 | 0.000 | 0.000 | 0.000 |
| 167 | 1359 | 0 \| Global XYZ | 0.000 | 0.000 | 0.000 | 0.000 | 0.000 | 0.000 |
| 168 | 1360 | 0 \| Global XYZ | 0.000 | 0.000 | 0.000 | 0.000 | 0.000 | 0.000 |
| 169 | 1361 | 0 \| Global XYZ | 0.000 | 0.000 | 0.000 | 0.000 | 0.000 | 0.000 |
| 170 | 1362 | 0 \| Global XYZ | 0.000 | 0.000 | 0.000 | 0.000 | 0.000 | 0.000 |
| 171 | 1363 | 0 \| Global XYZ | 0.000 | 0.000 | 0.000 | 0.000 | 0.000 | 0.000 |
| 172 | 1364 | 0 \| Global XYZ | 0.000 | 0.000 | 0.000 | 0.000 | 0.000 | 0.000 |
| 173 | 1365 | 0 \| Global XYZ | 0.000 | 0.000 | 0.000 | 0.000 | 0.000 | 0.000 |
| 174 | 1366 | 0 \| Global XYZ | 0.000 | 0.000 | 0.000 | 0.000 | 0.000 | 0.000 |
| 175 | 1367 | 0 \| Global XYZ | 0.000 | 0.000 | 0.000 | 0.000 | 0.000 | 0.000 |
| 176 | 1371 | 0 \| Global XYZ | 0.000 | 0.000 | 0.000 | 0.000 | 0.000 | 0.000 |
| 177 | 1372 | 0 \| Global XYZ | 0.000 | 0.000 | 0.000 | 0.000 | 0.000 | 0.000 |
| 178 | 1379 | 0 \| Global XYZ | 0.000 | 0.000 | 0.000 | 0.000 | 0.000 | 0.000 |
| 179 | 1396 | 0 \| Global XYZ | 0.000 | 0.000 | 0.000 | 0.000 | 0.000 | 0.000 |
| 180 | 1397 | 0 \| Global XYZ | 0.000 | 0.000 | 0.000 | 0.000 | 0.000 | 0.000 |
| 181 | 1398 | 0 \| Global XYZ | 0.000 | 0.000 | 0.000 | 0.000 | 0.000 | 0.000 |
| 182 | 1399 | 0 \| Global XYZ | 0.000 | 0.000 | 0.000 | 0.000 | 0.000 | 0.000 |
| 183 | 1400 | 0 \| Global XYZ | 0.000 | 0.000 | 0.000 | 0.000 | 0.000 | 0.000 |
| 184 | 1401 | 0 \| Global XYZ | 0.000 | 0.000 | 0.000 | 0.000 | 0.000 | 0.000 |
| 185 | 1402 | 0 \| Global XYZ | 0.000 | 0.000 | 0.000 | 0.000 | 0.000 | 0.000 |
| 186 | 1403 | 0 \| Global XYZ | 0.000 | 0.000 | 0.000 | 0.000 | 0.000 | 0.000 |
| 187 | 1404 | 0 \| Global XYZ | 0.000 | 0.000 | 0.000 | 0.000 | 0.000 | 0.000 |
| 188 | 1405 | 0 \| Global XYZ | 0.000 | 0.000 | 0.000 | 0.000 | 0.000 | 0.000 |
| 189 | 1410 | 0 \| Global XYZ | 0.000 | 0.000 | 0.000 | 0.000 | 0.000 | 0.000 |
| 190 | 1411 | 0 \| Global XYZ | 0.000 | 0.000 | 0.000 | 0.000 | 0.000 | 0.000 |
| 191 | 1412 | 0 \| Global XYZ | 0.000 | 0.000 | 0.000 | 0.000 | 0.000 | 0.000 |
| 192 | 1413 | 0 \| Global XYZ | 0.000 | 0.000 | 0.000 | 0.000 | 0.000 | 0.000 |
| 193 | 1414 | 0 \| Global XYZ | 0.000 | 0.000 | 0.000 | 0.000 | 0.000 | 0.000 |
| 194 | 1415 | 0 \| Global XYZ | 0.000 | 0.000 | 0.000 | 0.000 | 0.000 | 0.000 |
| 195 | 1416 | 0 \| Global XYZ | 0.000 | 0.000 | 0.000 | 0.000 | 0.000 | 0.000 |
| 196 | 1417 | 0 \| Global XYZ | 0.000 | 0.000 | 0.000 | 0.000 | 0.000 | 0.000 |
| 197 | 1418 | 0 \| Global XYZ | 0.000 | 0.000 | 0.000 | 0.000 | 0.000 | 0.000 |
| 198 | 1419 | 0 \| Global XYZ | 0.000 | 0.000 | 0.000 | 0.000 | 0.000 | 0.000 |
| 199 | 1420 | 0 \| Global XYZ | 0.000 | 0.000 | 0.000 | 0.000 | 0.000 | 0.000 |
| 200 | 1421 | 0 \| Global XYZ | 0.000 | 0.000 | 0.000 | 0.000 | 0.000 | 0.000 |
| 201 | 1422 | 0 \| Global XYZ | 0.000 | 0.000 | 0.000 | 0.000 | 0.000 | 0.000 |
| 202 | 1424 | 0 \| Global XYZ | 0.000 | 0.000 | 0.000 | 0.000 | 0.000 | 0.000 |
| 203 | 1425 | 0 \| Global XYZ | 0.000 | 0.000 | 0.000 | 0.000 | 0.000 | 0.000 |
| 204 | 1426 | 0 \| Global XYZ | 0.000 | 0.000 | 0.000 | 0.000 | 0.000 | 0.000 |
| 205 | 1427 | 0 \| Global XYZ | 0.000 | 0.000 | 0.000 | 0.000 | 0.000 | 0.000 |
| 206 | 1428 | 0 \| Global XYZ | 0.000 | 0.000 | 0.000 | 0.000 | 0.000 | 0.000 |
| 207 | 1431 | 0 \| Global XYZ | 0.000 | 0.000 | 0.000 | 0.000 | 0.000 | 0.000 |
| 208 | 1432 | 0 \| Global XYZ | 0.000 | 0.000 | 0.000 | 0.000 | 0.000 | 0.000 |

## 4.0 RESULTS - SUMMARY

| | Description | Value | Unit | Comment |
|---|---|---|---|---|
| | LC1 - stalna | | | |
| | Sum of loads in X | 0.00 | kN | |
| | Sum of support reactions in X | -0.00 | kN | |
| | Sum of loads in Y | 0.00 | kN | |
| | Sum of support reactions in Y | -0.00 | kN | |
| | Sum of loads in Z | 2438.76 | kN | |
| | Sum of support reactions in Z | 2438.76 | kN | Deviation -0.00% |
| | Resultant of reactions about X | 12714.10 | kNm | At center of gravity of model (X:-26.67, Y:-8.20, Z:-6.11 m) |
| | Resultant of reactions about Y | -18795.20 | kNm | At center of gravity of model |
| | Resultant of reactions about Z | 0.00 | kNm | At center of gravity of model |
| | Max displacement in X | 6.2 | mm | Member No. 259, x: 0.580 m |
| | Max displacement in Y | -6.3 | mm | Member No. 131, x: 3.354 m |
| | Max displacement in Z | 63.4 | mm | Member No. 515, x: 6.745 m |
| | Max vectorial displacement | 63.7 | mm | Member No. 515, x: 6.745 m |
| | Max rotation about X | -18.9 | mrad | Member No. 207, x: 4.602 m |
| | Max rotation about Y | -14.9 | mrad | Member No. 297, x: 0.000 m |
| | Max rotation about Z | 1.3 | mrad | Member No. 207, x: 4.602 m |
| | Method of analysis | Linear | | Geometrically linear analysis |
| | Stiffness reduction multiplied by coefficient | ☐ | | |
| | Number of load increments | 1 | | |
| | Number of iterations | 1 | | |
| | LC2 - koristna etaža | | | |
| | Sum of loads in X | 0.00 | kN | |
| | Sum of support reactions in X | -0.00 | kN | |
| | Sum of loads in Y | 0.00 | kN | |
| | Sum of support reactions in Y | 0.00 | kN | |
| | Sum of loads in Z | 699.61 | kN | |
| | Sum of support reactions in Z | 699.61 | kN | Deviation -0.00% |
| | Resultant of reactions about X | 6293.66 | kNm | At center of gravity of model (X:-26.67, Y:-8.20, Z:-6.11 m) |
| | Resultant of reactions about Y | -8790.42 | kNm | At center of gravity of model |
| | Resultant of reactions about Z | 0.00 | kNm | At center of gravity of model |
| | Max displacement in X | 3.0 | mm | Member No. 176, x: 1.904 m |
| | Max displacement in Y | -2.3 | mm | Member No. 173, x: 3.512 m |
| | Max displacement in Z | 14.0 | mm | Member No. 318, x: 1.910 m |
| | Max vectorial displacement | 14.0 | mm | Member No. 318, x: 1.910 m |
| | Max rotation about X | 6.9 | mrad | Member No. 318, x: 0.000 m |
| | Max rotation about Y | -3.8 | mrad | Member No. 140, x: 0.950 m |
| | Max rotation about Z | -0.8 | mrad | Member No. 52, x: 0.632 m |
| | Method of analysis | Linear | | Geometrically linear analysis |
| | Stiffness reduction multiplied by coefficient | ☐ | | |
| | Number of load increments | 1 | | |
| | Number of iterations | 1 | | |
| | LC3 - sneg 1 | | | |
| | Sum of loads in X | 0.00 | kN | |
| | Sum of support reactions in X | -0.00 | kN | |
| | Sum of loads in Y | 0.00 | kN | |
| | Sum of support reactions in Y | -0.00 | kN | |
| | Sum of loads in Z | 1358.44 | kN | |
| | Sum of support reactions in Z | 1358.44 | kN | Deviation -0.00% |
| | Resultant of reactions about X | -5756.46 | kNm | At center of gravity of model (X:-26.67, Y:-8.20, Z:-6.11 m) |
| | Resultant of reactions about Y | 4774.04 | kNm | At center of gravity of model |
| | Resultant of reactions about Z | 0.00 | kNm | At center of gravity of model |
| | Max displacement in X | 10.1 | mm | Member No. 10, x: 0.563 m |
| | Max displacement in Y | -15.2 | mm | Member No. 259, x: 0.580 m |
| | Max displacement in Z | 57.1 | mm | |
| | Max vectorial displacement | 58.2 | mm | |
| | Max rotation about X | 12.6 | mrad | Member No. 197, x: 2.785 m |
| | Max rotation about Y | 6.5 | mrad | Member No. 518, x: 0.000 m |
| | Max rotation about Z | -0.6 | mrad | Member No. 296, x: 0.000 m |
| | Method of analysis | Linear | | Geometrically linear analysis |
| | Stiffness reduction multiplied by coefficient | ☐ | | |
| | Number of load increments | 1 | | |
| | Number of iterations | 1 | | |
| | LC4 - sneg 2 | | | |
| | Sum of loads in X | 0.00 | kN | |
| | Sum of support reactions in X | -0.00 | kN | |
| | Sum of loads in Y | 0.00 | kN | |
| | Sum of support reactions in Y | 0.00 | kN | |
| | Sum of loads in Z | 1543.32 | kN | |
| | Sum of support reactions in Z | 1543.32 | kN | Deviation 0.00% |
| | Resultant of reactions about X | -8953.95 | kNm | At center of gravity of model (X:-26.67, Y:-8.20, Z:-6.11 m) |
| | Resultant of reactions about Y | 8118.57 | kNm | At center of gravity of model |
| | Resultant of reactions about Z | 0.00 | kNm | At center of gravity of model |
| | Max displacement in X | 12.7 | mm | Member No. 10, x: 0.563 m |
| | Max displacement in Y | -19.1 | mm | Member No. 259, x: 0.580 m |
| | Max displacement in Z | 72.0 | mm | |
| | Max vectorial displacement | 73.3 | mm | |
| | Max rotation about X | 17.4 | mrad | Member No. 106, x: 0.000 m |
| | Max rotation about Y | 8.9 | mrad | Member No. 518, x: 0.000 m |
| | Max rotation about Z | 0.7 | mrad | Member No. 518, x: 0.000 m |
| | Method of analysis | Linear | | Geometrically linear analysis |
| | Stiffness reduction multiplied by coefficient | ☐ | | |
| | Number of load increments | 1 | | |
| | Number of iterations | 1 | | |
| | LC5 - veter + | | | |
| | Sum of loads in X | -13.40 | kN | |
| | Sum of support reactions in X | -13.40 | kN | Deviation 0.00% |
| | Sum of loads in Y | -169.72 | kN | |
| | Sum of support reactions in Y | -169.72 | kN | Deviation -0.00% |
| | Sum of loads in Z | 490.80 | kN | |
| | Sum of support reactions in Z | 490.80 | kN | Deviation 0.00% |
| | Resultant of reactions about X | -2264.30 | kNm | At center of gravity of model (X:-26.67, Y:-8.20, Z:-6.11 m) |
| | Resultant of reactions about Y | 1865.96 | kNm | At center of gravity of model |
| | Resultant of reactions about Z | -1504.62 | kNm | At center of gravity of model |

## 4.0 RESULTS - SUMMARY

| | Description | Value | Unit | Comment |
|---|---|---|---|---|
| | Max displacement in X | -18.7 | mm | Member No. 107, x: 1.910 m |
| | Max displacement in Y | -30.6 | mm | Member No. 117, x: 1.781 m |
| | Max displacement in Z | 23.3 | mm | |
| | Max vectorial displacement | 36.2 | mm | |
| | Max rotation about X | -11.8 | mrad | Member No. 356, x: 0.000 m |
| | Max rotation about Y | 4.2 | mrad | Member No. 156, x: 0.000 m |
| | Max rotation about Z | -14.1 | mrad | Member No. 107, x: 3.820 m |
| | Method of analysis | Linear | | Geometrically linear analysis |
| | Stiffness reduction multiplied by coefficient | ☐ | | |
| | Number of load increments | 1 | | |
| | Number of iterations | 1 | | |
| | LC6 - veter - | | | |
| | Sum of loads in X | -32.39 | kN | |
| | Sum of support reactions in X | -32.39 | kN | Deviation 0.00% |
| | Sum of loads in Y | 182.90 | kN | |
| | Sum of support reactions in Y | 182.90 | kN | Deviation -0.00% |
| | Sum of loads in Z | -809.38 | kN | |
| | Sum of support reactions in Z | -809.38 | kN | Deviation 0.00% |
| | Resultant of reactions about X | 1374.65 | kNm | At center of gravity of model (X:-26.67, Y:-8.20, Z:-6.11 m) |
| | Resultant of reactions about Y | 1904.27 | kNm | At center of gravity of model |
| | Resultant of reactions about Z | 2039.39 | kNm | At center of gravity of model |
| | Max displacement in X | -19.8 | mm | Member No. 107, x: 1.910 m |
| | Max displacement in Y | 42.3 | mm | Member No. 117, x: 1.781 m |
| | Max displacement in Z | -47.9 | mm | |
| | Max vectorial displacement | 58.6 | mm | |
| | Max rotation about X | 14.4 | mrad | Member No. 356, x: 0.000 m |
| | Max rotation about Y | -5.6 | mrad | Member No. 518, x: 0.000 m |
| | Max rotation about Z | 14.1 | mrad | Member No. 107, x: 0.000 m |
| | Method of analysis | Linear | | Geometrically linear analysis |
| | Stiffness reduction multiplied by coefficient | ☐ | | |
| | Number of load increments | 1 | | |
| | Number of iterations | 1 | | |
| | LC7 - izboène sile + | | | |
| | Sum of loads in X | 33.53 | kN | |
| | Sum of support reactions in X | 33.53 | kN | Deviation 0.00% |
| | Sum of loads in Y | 10.80 | kN | |
| | Sum of support reactions in Y | 10.80 | kN | Deviation 0.00% |
| | Sum of loads in Z | 0.00 | kN | |
| | Sum of support reactions in Z | 0.00 | kN | |
| | Resultant of reactions about X | 20.88 | kNm | At center of gravity of model (X:-26.67, Y:-8.20, Z:-6.11 m) |
| | Resultant of reactions about Y | -62.58 | kNm | At center of gravity of model |
| | Resultant of reactions about Z | -225.94 | kNm | At center of gravity of model |
| | Max displacement in X | 21.2 | mm | Member No. 255, x: 4.239 m |
| | Max displacement in Y | 24.5 | mm | Member No. 18, x: 4.239 m |
| | Max displacement in Z | 2.2 | mm | Member No. 218, x: 0.000 m |
| | Max vectorial displacement | 25.6 | mm | Member No. 18, x: 4.239 m |
| | Max rotation about X | 3.0 | mrad | Member No. 293, x: 0.000 m |
| | Max rotation about Y | -3.6 | mrad | Member No. 293, x: 0.000 m |
| | Max rotation about Z | -1.9 | mrad | Member No. 296, x: 0.000 m |
| | Method of analysis | Linear | | Geometrically linear analysis |
| | Stiffness reduction multiplied by coefficient | ☐ | | |
| | Number of load increments | 1 | | |
| | Number of iterations | 1 | | |
| | LC8 - izboène sile - | | | |
| | Sum of loads in X | -33.53 | kN | |
| | Sum of support reactions in X | -33.53 | kN | Deviation 0.00% |
| | Sum of loads in Y | -10.80 | kN | |
| | Sum of support reactions in Y | -10.80 | kN | Deviation 0.00% |
| | Sum of loads in Z | -0.00 | kN | |
| | Sum of support reactions in Z | -0.00 | kN | |
| | Resultant of reactions about X | -20.88 | kNm | At center of gravity of model (X:-26.67, Y:-8.20, Z:-6.11 m) |
| | Resultant of reactions about Y | 62.58 | kNm | At center of gravity of model |
| | Resultant of reactions about Z | 225.94 | kNm | At center of gravity of model |
| | Max displacement in X | -21.2 | mm | Member No. 255, x: 4.239 m |
| | Max displacement in Y | -24.5 | mm | Member No. 18, x: 4.239 m |
| | Max displacement in Z | -2.2 | mm | Member No. 218, x: 0.000 m |
| | Max vectorial displacement | 25.6 | mm | Member No. 18, x: 4.239 m |
| | Max rotation about X | -3.0 | mrad | Member No. 293, x: 0.000 m |
| | Max rotation about Y | 3.6 | mrad | Member No. 293, x: 0.000 m |
| | Max rotation about Z | 1.9 | mrad | Member No. 296, x: 0.000 m |
| | Method of analysis | Linear | | Geometrically linear analysis |
| | Stiffness reduction multiplied by coefficient | ☐ | | |
| | Number of load increments | 1 | | |
| | Number of iterations | 1 | | |
| | Summary | | | |
| | Max displacement in X | 21.2 | mm | LC7, Member No. 255, x: 4.239 m |
| | Max displacement in Y | 42.3 | mm | LC6, Member No. 117, x: 1.781 m |
| | Max displacement in Z | 72.0 | mm | LC4, |
| | Max vectorial displacement | 73.3 | mm | LC4, |
| | Max rotation about X | -18.9 | mrad | LC1, Member No. 207, x: 4.602 m |
| | Max rotation about Y | -14.9 | mrad | LC1, Member No. 297, x: 0.000 m |
| | Max rotation about Z | 14.1 | mrad | LC6, Member No. 107, x: 0.000 m |
| | Number of 1D finite elements (member elements) | 506 | | |
| | Number of FE mesh nodes | 246 | | |
| | Number of equations | 1476 | | |
| | Max number of iterations | 100 | | |
| | Divisions of members for member results | 10 | | |
| | Divisions of cable, foundation, or tapered members | 10 | | |
| | Activate shear rigidity (A-y, A-z) of members | ☒ | | |

| | | | |
|---|---|---|---|
| Other Settings | Max number of iterations | : | 100 |
| | Number of divisions for member results | : | 10 |

## 4.0 RESULTS - SUMMARY

| | | | |
|---|---|---|---|
| | | Member divisions, cables, foundation or tapered members | : 10 |
| | | Number of member divisions for searching maximum values | : 10 |
| | Options | ☒ Activate shear stiffness of members (Ay, Az) | |
| | | ☒ Modify stiffness (material, cross-sections, members, load cases and combinations) | |
| | | ☒ Apply temperature/deformation load actions without stiffness modifications | |
| | Precision and Tolerance | ☐ Change default setting | |

## 4.3 CROSS-SECTIONS - INTERNAL FORCES

| Member No. | LC/CO | Node No. | Location x [m] | Forces [kN] N | $V_y$ | $V_z$ | Moments [kNm] $M_T$ | $M_y$ | $M_z$ |
|---|---|---|---|---|---|---|---|---|---|
| | **Section No. 1: IF HE A 240-15 \| Euronorm 53-62** | | | | | | | | |
| 231 | LC6 | MAX N | 0.000 | 99.74 | 1.52 | -2.39 | 0.02 | 11.54 | 11.50 |
| 231 | LC4 | MIN N | 0.000 | -308.14 | -1.30 | -0.13 | -0.20 | -4.69 | -9.94 |
| 231 | LC7 | MAX $V_y$ | 0.000 | -0.09 | 2.27 | 0.06 | -1.06 | -0.30 | 16.91 |
| 231 | LC5 | MIN $V_y$ | 0.000 | -99.71 | -2.27 | 2.37 | -0.19 | -11.44 | -17.22 |
| 231 | LC5 | MAX $V_z$ | 0.000 | -99.71 | -2.27 | 2.37 | -0.19 | -11.44 | -17.22 |
| 231 | LC6 | MIN $V_z$ | 0.000 | 99.74 | 1.52 | -2.39 | 0.02 | 11.54 | 11.50 |
| 231 | LC8 | MAX $M_T$ | 0.000 | 0.09 | -2.27 | -0.06 | 1.06 | 0.30 | -16.91 |
| 231 | LC7 | MIN $M_T$ | 0.000 | -0.09 | 2.27 | 0.06 | -1.06 | -0.30 | 16.91 |
| 231 | LC6 | MAX $M_y$ | 0.000 | 99.74 | 1.52 | -2.39 | 0.02 | 11.54 | 11.50 |
| 231 | LC5 | MIN $M_y$ | 0.000 | -99.71 | -2.27 | 2.37 | -0.19 | -11.44 | -17.22 |
| 231 | LC7 | MAX $M_z$ | 0.000 | -0.09 | 2.27 | 0.06 | -1.06 | -0.30 | 16.91 |
| 231 | LC5 | MIN $M_z$ | 0.000 | -99.71 | -2.27 | 2.37 | -0.19 | -11.44 | -17.22 |
| | **Section No. 2: HE A 200 \| Euronorm 53-62** | | | | | | | | |
| 1 | LC4 | MAX N | 0.000 | 170.14 | 0.09 | -0.07 | 0.00 | 0.00 | 0.00 |
| 1 | LC6 | MIN N | 0.000 | -56.94 | -0.12 | 0.09 | 0.00 | 0.00 | 0.00 |
| 1 | LC5 | MAX $V_y$ | 0.000 | 56.91 | 0.12 | -0.13 | 0.00 | 0.00 | 0.00 |
| 1 | LC6 | MIN $V_y$ | 0.000 | -56.94 | -0.12 | 0.09 | 0.00 | 0.00 | 0.00 |
| 1 | LC7 | MAX $V_z$ | 0.000 | 0.09 | 0.00 | 0.18 | 0.00 | 0.00 | 0.00 |
| 1 | LC8 | MIN $V_z$ | 0.000 | -0.09 | 0.00 | -0.18 | 0.00 | 0.00 | 0.00 |
| 1 | LC8 | MAX $M_T$ | 0.000 | -0.09 | 0.00 | -0.18 | 0.00 | 0.00 | 0.00 |
| 1 | LC7 | MIN $M_T$ | 0.000 | 0.09 | 0.00 | 0.18 | 0.00 | 0.00 | 0.00 |
| 1 | LC7 | MAX $M_y$ | 7.890 | 0.09 | 0.00 | 0.18 | 0.00 | 1.46 | -0.01 |
| 1 | LC8 | MIN $M_y$ | 7.890 | -0.09 | 0.00 | -0.18 | 0.00 | -1.46 | 0.01 |
| 1 | LC6 | MAX $M_z$ | 7.890 | -56.94 | -0.12 | 0.09 | 0.00 | 0.70 | 0.98 |
| 1 | LC5 | MIN $M_z$ | 7.890 | 56.91 | 0.12 | -0.13 | 0.00 | -1.01 | -0.98 |
| | **Section No. 3: HE B 200 \| Euronorm 53-62** | | | | | | | | |
| 34 | LC6 | MAX N | 0.000 | 181.79 | 0.01 | -0.39 | -0.01 | 1.09 | 0.00 |
| 34 | LC4 | MIN N | 0.000 | -255.47 | -0.01 | 4.38 | 0.00 | -12.14 | -0.01 |
| 4 | LC4 | MAX $V_y$ | 0.000 | -206.58 | 0.01 | -1.44 | 0.00 | 3.76 | 0.03 |
| 34 | LC4 | MIN $V_y$ | 0.000 | -255.47 | -0.01 | 4.38 | 0.00 | -12.14 | -0.01 |
| 34 | LC4 | MAX $V_z$ | 0.000 | -255.47 | -0.01 | 4.38 | 0.00 | -12.14 | -0.01 |
| 4 | LC4 | MIN $V_z$ | 0.000 | -206.58 | 0.01 | -1.44 | 0.00 | 3.76 | 0.03 |
| 34 | LC1 | MAX $M_T$ | 0.000 | -101.56 | 0.00 | 1.53 | 0.01 | -4.23 | 0.03 |
| 4 | LC7 | MIN $M_T$ | 0.000 | -0.04 | 0.00 | -0.01 | -0.01 | 0.02 | 0.01 |
| 4 | LC4 | MAX $M_y$ | 0.000 | -206.58 | 0.01 | -1.44 | 0.00 | 3.76 | 0.03 |
| 34 | LC4 | MIN $M_y$ | 0.000 | -255.47 | -0.01 | 4.38 | 0.00 | -12.14 | -0.01 |
| 34 | LC1 | MAX $M_z$ | 2.770 | -99.87 | 0.00 | 1.53 | 0.01 | 0.00 | 0.04 |
| 34 | LC8 | MIN $M_z$ | 0.000 | -1.55 | 0.00 | -0.59 | 0.00 | 1.64 | -0.02 |
| | **Section No. 4: IF IPE 400-6 \| Euronorm 19-57** | | | | | | | | |
| 175 | LC6 | MAX N | 0.000 | 164.16 | 0.20 | 68.91 | 1.30 | -98.69 | 0.37 |
| 254 | LC4 | MIN N | 0.000 | -265.58 | -0.03 | 51.71 | -0.02 | -110.96 | -0.05 |
| 8 | LC7 | MAX $V_y$ | 0.000 | 0.03 | 1.72 | -0.01 | -0.02 | 0.03 | 1.71 |
| 8 | LC8 | MIN $V_y$ | 0.000 | -0.03 | -1.72 | 0.01 | 0.02 | -0.03 | -1.71 |
| 268 | LC6 | MAX $V_z$ | 2.785 | 151.80 | 0.12 | 92.65 | 0.23 | 114.37 | -0.29 |
| 258 | LC4 | MIN $V_z$ | 2.785 | -221.01 | 0.05 | -97.54 | -1.06 | -126.25 | -0.15 |
| 258 | LC1 | MAX $M_T$ | 0.000 | -66.67 | 0.12 | -23.02 | 2.21 | 34.64 | 0.12 |
| 175 | LC1 | MIN $M_T$ | 0.000 | -85.99 | -0.07 | -16.88 | -1.96 | 30.84 | -0.31 |
| 258 | LC4 | MAX $M_y$ | 0.000 | -221.35 | 0.05 | -91.95 | -1.06 | 135.93 | -0.01 |
| 268 | LC6 | MIN $M_y$ | 0.000 | 151.80 | 0.12 | 82.64 | 0.23 | -127.55 | 0.04 |
| 255 | LC7 | MAX $M_z$ | 0.000 | 0.00 | 1.40 | 0.00 | 0.00 | 0.00 | 2.96 |
| 255 | LC8 | MIN $M_z$ | 0.000 | 0.00 | -1.40 | 0.00 | 0.00 | 0.00 | -2.96 |
| | **Section No. 5: RO 168.3x6.3 \| EN 10219-2:2006** | | | | | | | | |
| 261 | LC4 | MAX N | 0.000 | 329.14 | 0.00 | 0.00 | 0.00 | 0.00 | 0.00 |
| 295 | LC6 | MIN N | 0.000 | -215.26 | 0.00 | 0.00 | 0.01 | 0.00 | 0.00 |
| 251 | LC1 | MAX $V_y$ | 0.000 | 74.84 | 0.00 | 0.35 | 0.00 | 0.00 | 0.00 |
| 251 | LC1 | MIN $V_y$ | 3.924 | 74.14 | 0.00 | -0.35 | 0.00 | 0.00 | 0.00 |
| 260 | LC1 | MAX $V_z$ | 0.000 | 81.81 | 0.00 | 1.07 | -0.02 | 0.00 | 0.00 |
| 260 | LC1 | MIN $V_z$ | 8.811 | 82.37 | 0.00 | -1.07 | -0.02 | 0.00 | 0.00 |
| 261 | LC1 | MAX $M_T$ | 0.000 | 100.05 | 0.00 | 0.35 | 0.04 | 0.00 | 0.00 |
| 295 | LC1 | MIN $M_T$ | 0.000 | 115.86 | 0.00 | 0.35 | -0.03 | 0.00 | 0.00 |
| 260 | LC1 | MAX $M_y$ | 4.406 | 82.09 | 0.00 | 0.00 | -0.02 | 2.36 | 0.00 |
| 260 | LC4 | MIN $M_y$ | 0.000 | 270.76 | 0.00 | 0.00 | 0.00 | 0.00 | 0.00 |
| 251 | LC5 | MAX $M_z$ | 0.000 | 71.80 | 0.00 | 0.00 | 0.00 | 0.00 | 0.00 |
| 251 | LC1 | MIN $M_z$ | 1.962 | 74.49 | 0.00 | 0.00 | 0.00 | 0.34 | 0.00 |
| | **Section No. 6: HE B 260 \| Euronorm 53-62** | | | | | | | | |
| 62 | LC4 | MAX N | 0.000 | 277.30 | 0.20 | 0.66 | 0.00 | -9.75 | 0.53 |
| 74 | LC6 | MIN N | 0.000 | -186.63 | -1.61 | -14.00 | 0.00 | 64.94 | -4.96 |
| 288 | LC6 | MAX $V_y$ | 0.000 | -93.41 | 8.36 | -123.06 | -0.09 | 66.68 | 4.00 |
| 492 | LC1 | MIN $V_y$ | 0.000 | 61.08 | -12.17 | -1.09 | 0.00 | -1.53 | -27.35 |
| 288 | LC4 | MAX $V_z$ | 0.000 | 208.31 | -7.60 | 252.00 | 0.00 | -143.11 | -5.72 |
| 341 | LC6 | MIN $V_z$ | 0.000 | -122.59 | -3.20 | -162.64 | 0.01 | 87.04 | -0.07 |
| 343 | LC6 | MAX $M_T$ | 0.000 | -122.29 | -2.72 | -162.11 | 0.01 | 86.37 | 0.75 |
| 288 | LC6 | MIN $M_T$ | 0.000 | -93.41 | 8.36 | -123.06 | -0.09 | 66.68 | 4.00 |
| 341 | LC6 | MAX $M_y$ | 0.000 | -122.59 | -3.20 | -162.64 | 0.01 | 87.04 | -0.07 |

## 4.3 CROSS-SECTIONS - INTERNAL FORCES

| Member No. | LC/CO | Node No. | Location x [m] | Forces [kN] N | $V_y$ | $V_z$ | Moments [kNm] $M_T$ | $M_y$ | $M_z$ |
|---|---|---|---|---|---|---|---|---|---|
| 288 | LC4 | MIN $M_y$ | 0.000 | 208.31 | -7.60 | 252.00 | 0.00 | -143.11 | -5.72 |
| 62 | LC1 | MAX $M_z$ | 5.590 | -6.56 | -5.32 | -0.07 | 0.00 | -1.53 | 20.28 |
| 492 | LC1 | MIN $M_z$ | 0.000 | 61.08 | -12.17 | -1.09 | 0.00 | -1.53 | -27.35 |
| | **Section No. 7: HE A 240 \| Euronorm 53-62** | | | | | | | | |
| 213 | LC4 | MAX N | 0.000 | 240.03 | 1.23 | 2.35 | 0.00 | -6.82 | -0.90 |
| 213 | LC6 | MIN N | 0.000 | -182.25 | 1.52 | -2.34 | 0.00 | 5.84 | -4.60 |
| 86 | LC6 | MAX $V_y$ | 0.000 | -134.33 | 4.31 | -4.09 | 0.00 | 10.35 | 16.85 |
| 86 | LC5 | MIN $V_y$ | 0.000 | 84.24 | -3.94 | -1.62 | 0.00 | 5.16 | -14.97 |
| 86 | LC7 | MAX $V_z$ | 0.000 | -26.58 | 0.48 | 3.95 | 0.00 | -11.66 | 2.41 |
| 86 | LC6 | MIN $V_z$ | 0.000 | -134.33 | 4.31 | -4.09 | 0.00 | 10.35 | 16.85 |
| 86 | LC8 | MAX $M_T$ | 0.000 | 26.58 | -0.48 | -3.95 | 0.00 | 11.66 | -2.41 |
| 86 | LC7 | MIN $M_T$ | 0.000 | -26.58 | 0.48 | 3.95 | 0.00 | -11.66 | 2.41 |
| 86 | LC8 | MAX $M_y$ | 0.000 | 26.58 | -0.48 | -3.95 | 0.00 | 11.66 | -2.41 |
| 86 | LC7 | MIN $M_y$ | 0.000 | -26.58 | 0.48 | 3.95 | 0.00 | -11.66 | 2.41 |
| 86 | LC6 | MAX $M_z$ | 0.000 | -134.33 | 4.31 | -4.09 | 0.00 | 10.35 | 16.85 |
| 86 | LC5 | MIN $M_z$ | 0.000 | 84.24 | -3.94 | -1.62 | 0.00 | 5.16 | -14.97 |
| | **Section No. 8: HE A 300 \| Euronorm 53-62** | | | | | | | | |
| 346 | LC6 | MAX N | 0.000 | 291.35 | -1.06 | -8.74 | -0.03 | -54.76 | 1.96 |
| 346 | LC4 | MIN N | 0.000 | -388.18 | -0.32 | 0.65 | 0.00 | -6.04 | 0.01 |
| 167 | LC7 | MAX $V_y$ | 0.000 | 8.44 | 4.02 | -4.18 | -0.01 | -1.98 | 6.89 |
| 167 | LC8 | MIN $V_y$ | 0.000 | -8.44 | -4.02 | 4.18 | 0.01 | 1.98 | -6.89 |
| 87 | LC5 | MAX $V_z$ | 0.000 | -119.39 | -2.31 | 22.09 | -0.02 | -87.70 | -6.00 |
| 87 | LC6 | MIN $V_z$ | 0.000 | 264.34 | -1.62 | -24.45 | 0.02 | 99.78 | -5.54 |
| 346 | LC5 | MAX $M_T$ | 0.000 | -145.74 | -0.15 | 8.34 | 0.02 | 50.15 | 0.83 |
| 346 | LC6 | MIN $M_T$ | 0.000 | 291.35 | -1.06 | -8.74 | -0.03 | -54.76 | 1.96 |
| 87 | LC6 | MAX $M_y$ | 0.000 | 264.34 | -1.62 | -24.45 | 0.02 | 99.78 | -5.54 |
| 87 | LC5 | MIN $M_y$ | 0.000 | -119.39 | -2.31 | 22.09 | -0.02 | -87.70 | -6.00 |
| 87 | LC7 | MAX $M_z$ | 0.000 | -14.03 | 3.91 | -3.70 | 0.00 | 16.46 | 11.46 |
| 87 | LC8 | MIN $M_z$ | 0.000 | 14.03 | -3.91 | 3.70 | 0.00 | -16.46 | -11.46 |
| | **Section No. 9: IPE 200 \| Euronorm 19-57** | | | | | | | | |
| 95 | LC7 | MAX N | 0.000 | 6.93 | -0.04 | 0.01 | 0.00 | -0.02 | -0.02 |
| 96 | LC5 | MIN N | 0.000 | -9.34 | -0.04 | 3.30 | 0.00 | -7.19 | -0.02 |
| 52 | LC5 | MAX $V_y$ | 0.000 | -3.40 | 2.18 | 2.12 | 0.00 | -2.83 | 1.08 |
| 97 | LC5 | MIN $V_y$ | 2.240 | -6.81 | -1.73 | 0.81 | 0.00 | -2.83 | 0.88 |
| 183 | LC1 | MAX $V_z$ | 0.000 | -0.24 | -0.80 | 16.73 | 0.00 | -10.99 | -0.21 |
| 53 | LC1 | MIN $V_z$ | 1.580 | 2.34 | 0.12 | -12.61 | 0.00 | -10.99 | -0.20 |
| 344 | LC6 | MAX $M_T$ | 0.000 | 1.17 | 0.96 | -5.01 | 0.03 | -0.11 | 0.59 |
| 344 | LC5 | MIN $M_T$ | 0.000 | -0.87 | -0.76 | 3.57 | -0.02 | 0.23 | -0.46 |
| 96 | LC6 | MAX $M_y$ | 0.000 | 2.58 | -0.02 | -6.96 | 0.00 | 13.62 | -0.02 |
| 93 | LC3 | MIN $M_y$ | 0.000 | 0.57 | 0.01 | 11.82 | 0.00 | -20.18 | 0.02 |
| 52 | LC5 | MAX $M_z$ | 0.000 | -3.40 | 2.18 | 2.12 | 0.00 | -2.83 | 1.08 |
| 177 | LC5 | MIN $M_z$ | 0.264 | -1.89 | 0.01 | -0.78 | 0.00 | 0.31 | -0.82 |
| | **Section No. 10: IPE 200 \| Euronorm 19-57** | | | | | | | | |
| 500 | LC7 | MAX N | 0.000 | 16.30 | -0.04 | -0.70 | 0.00 | 0.03 | -0.04 |
| 500 | LC8 | MIN N | 0.000 | -16.30 | 0.04 | 0.70 | 0.00 | -0.03 | 0.04 |
| 51 | LC5 | MAX $V_y$ | 0.000 | 0.49 | 2.24 | -0.09 | 0.00 | 0.36 | 1.36 |
| 138 | LC5 | MIN $V_y$ | 3.563 | 0.49 | -2.13 | -0.15 | 0.00 | 0.37 | 1.36 |
| 220 | LC4 | MAX $V_z$ | 0.000 | -1.03 | -0.04 | 12.30 | -0.01 | -18.50 | -0.08 |
| 83 | LC1 | MIN $V_z$ | 3.562 | -0.73 | -0.03 | -11.04 | 0.00 | -13.64 | 0.02 |
| 217 | LC4 | MAX $M_T$ | 0.000 | 0.53 | -0.02 | -0.03 | 0.03 | 0.30 | -0.03 |
| 106 | LC4 | MIN $M_T$ | 0.000 | 0.14 | 0.02 | -0.23 | -0.03 | 0.26 | 0.04 |
| 220 | LC4 | MAX $M_y$ | 3.563 | -1.03 | -0.04 | 4.71 | -0.01 | 11.81 | 0.07 |
| 220 | LC4 | MIN $M_y$ | 0.000 | -1.03 | -0.04 | 12.30 | -0.01 | -18.50 | -0.08 |
| 138 | LC5 | MAX $M_z$ | 3.563 | 0.49 | -2.13 | -0.15 | 0.00 | 0.37 | 1.36 |
| 51 | LC5 | MIN $M_z$ | 1.781 | 0.49 | 0.18 | -0.31 | 0.00 | -0.23 | -0.80 |
| | **Section No. 11: IPE 300 \| Euronorm 19-57** | | | | | | | | |
| 36 | LC5 | MAX N | 0.000 | 8.37 | -1.69 | 0.56 | 0.00 | 0.73 | -0.67 |
| 47 | LC7 | MIN N | 0.000 | -4.11 | 0.02 | -1.87 | 0.00 | 1.81 | 0.01 |
| 141 | LC5 | MAX $V_y$ | 2.375 | 6.04 | 2.03 | 0.73 | 0.00 | -1.12 | -0.84 |
| 141 | LC6 | MIN $V_y$ | 2.375 | 2.06 | -2.03 | 1.17 | 0.00 | -1.58 | 0.84 |
| 144 | LC1 | MAX $V_z$ | 0.000 | 2.38 | 0.00 | 47.39 | 0.00 | -73.55 | 0.00 |
| 316 | LC1 | MIN $V_z$ | 2.375 | 4.15 | 0.00 | -53.09 | 0.00 | -85.78 | 0.00 |
| 155 | LC5 | MAX $M_T$ | 0.000 | 6.93 | 0.69 | -9.27 | 0.03 | 2.94 | 0.10 |
| 155 | LC6 | MIN $M_T$ | 0.000 | -2.93 | -0.88 | 47.13 | -0.03 | -6.40 | -0.15 |
| 315 | LC1 | MAX $M_y$ | 0.000 | 5.15 | 0.00 | -3.92 | 0.00 | 49.60 | 0.00 |
| 316 | LC1 | MIN $M_y$ | 2.375 | 4.15 | 0.00 | -53.09 | 0.00 | -85.78 | 0.00 |
| 141 | LC6 | MAX $M_z$ | 2.375 | 2.06 | -2.03 | 1.17 | 0.00 | -1.58 | 0.84 |
| 141 | LC5 | MIN $M_z$ | 2.375 | 6.04 | 2.03 | 0.73 | 0.00 | -1.12 | -0.84 |
| | **Section No. 12: IPE 240 \| Euronorm 19-57** | | | | | | | | |
| 37 | LC5 | MAX N | 0.000 | 10.08 | 0.07 | -0.75 | 0.00 | 2.07 | 0.16 |
| 230 | LC1 | MIN N | 0.000 | -4.87 | -0.03 | -19.76 | 0.01 | 12.15 | 0.01 |
| 338 | LC5 | MAX $V_y$ | 0.525 | 3.92 | 9.56 | 25.91 | 0.02 | 7.87 | -3.14 |
| 338 | LC6 | MIN $V_y$ | 0.525 | 1.52 | -9.83 | -24.09 | -0.02 | -5.37 | 3.26 |
| 338 | LC4 | MAX $V_z$ | 0.000 | -0.87 | -0.96 | 40.99 | -0.01 | -11.60 | -0.19 |
| 3 | LC1 | MIN $V_z$ | 2.375 | 0.10 | 0.00 | -35.29 | 0.00 | -56.85 | 0.00 |
| 202 | LC6 | MAX $M_T$ | 0.000 | -1.29 | 0.22 | 0.38 | 0.06 | 2.16 | 0.24 |
| 202 | LC5 | MIN $M_T$ | 0.000 | 0.69 | -0.40 | -0.09 | -0.05 | -3.16 | -0.32 |
| 140 | LC1 | MAX $M_y$ | 2.375 | 0.13 | 0.00 | 25.10 | 0.00 | 37.35 | 0.00 |
| 3 | LC1 | MIN $M_y$ | 2.375 | 0.10 | 0.00 | -35.29 | 0.00 | -56.85 | 0.00 |
| 338 | LC6 | MAX $M_z$ | 0.525 | 1.52 | -9.83 | -24.09 | -0.02 | -5.37 | 3.26 |
| 338 | LC5 | MIN $M_z$ | 0.525 | 3.92 | 9.56 | 25.91 | 0.02 | 7.87 | -3.14 |
| | **Section No. 13: RO 101.6x3 \| EN 10219-2:2006** | | | | | | | | |
| 287 | LC8 | MAX N | 0.000 | 13.27 | 0.00 | 0.00 | 0.00 | 0.00 | 0.00 |
| 287 | LC7 | MIN N | 0.000 | -13.27 | 0.00 | 0.00 | 0.00 | 0.00 | 0.00 |
| 207 | LC1 | MAX $V_y$ | 0.000 | 0.14 | 0.03 | -0.24 | -0.01 | 1.90 | 0.13 |
| 312 | LC1 | MIN $V_y$ | 0.000 | -0.04 | -0.03 | 0.58 | 0.00 | 0.00 | 0.00 |
| 312 | LC1 | MAX $V_z$ | 0.000 | -0.04 | -0.03 | 0.58 | 0.00 | 0.00 | 0.00 |

## 4.3 CROSS-SECTIONS - INTERNAL FORCES

| Member No. | LC/CO | Node No. | Location x [m] | Forces [kN] N | $V_y$ | $V_z$ | Moments [kNm] $M_T$ | $M_y$ | $M_z$ |
|---|---|---|---|---|---|---|---|---|---|
| 207 | LC1 | MIN $V_z$ | 4.602 | 0.14 | 0.03 | -0.58 | -0.01 | 0.00 | 0.00 |
| 296 | LC6 | MAX $M_T$ | 0.000 | 1.23 | 0.00 | 0.00 | 0.04 | 0.00 | 0.00 |
| 306 | LC4 | MIN $M_T$ | 0.000 | 0.02 | 0.00 | 0.00 | -0.04 | 0.00 | 0.00 |
| 207 | LC1 | MAX $M_y$ | 0.000 | 0.14 | 0.03 | -0.24 | -0.01 | 1.90 | 0.13 |
| 303 | LC7 | MIN $M_y$ | 3.938 | -4.13 | 0.00 | -0.01 | -0.02 | -0.03 | 0.00 |
| 207 | LC1 | MAX $M_z$ | 0.000 | 0.14 | 0.03 | -0.24 | -0.01 | 1.90 | 0.13 |
| 203 | LC6 | MIN $M_z$ | 0.000 | -0.02 | 0.00 | 0.00 | 0.01 | 0.00 | -0.01 |
| | **Section No. 14: IPE 180 \| Euronorm 19-57** | | | | | | | | |
| 366 | LC7 | MAX N | 0.000 | 2.25 | 0.00 | 0.00 | 0.00 | 0.00 | 0.00 |
| 367 | LC6 | MIN N | 0.000 | -3.81 | 0.00 | 0.00 | 0.00 | 0.00 | 0.00 |
| 370 | LC8 | MAX $V_y$ | 0.000 | 0.12 | 0.00 | 0.00 | 0.00 | 0.00 | 0.00 |
| 367 | LC6 | MIN $V_y$ | 0.000 | -3.81 | 0.00 | 0.00 | 0.00 | 0.00 | 0.00 |
| 323 | LC1 | MAX $V_z$ | 0.000 | -0.14 | 0.00 | 25.13 | 0.00 | 0.00 | 0.00 |
| 323 | LC1 | MIN $V_z$ | 3.820 | -0.14 | 0.00 | -25.13 | 0.00 | 0.00 | 0.00 |
| 371 | LC1 | MAX $M_T$ | 0.000 | -0.68 | 0.00 | 3.44 | 0.02 | 0.00 | 0.00 |
| 370 | LC1 | MIN $M_T$ | 0.000 | 1.96 | 0.00 | 3.87 | -0.01 | 0.00 | 0.00 |
| 323 | LC1 | MAX $M_y$ | 1.910 | -0.14 | 0.00 | 0.00 | 0.00 | 24.00 | 0.00 |
| 366 | LC1 | MIN $M_y$ | 0.000 | 0.96 | 0.00 | 4.34 | -0.01 | 0.00 | 0.00 |
| 363 | LC8 | MAX $M_z$ | 0.000 | -0.14 | 0.00 | 0.00 | 0.00 | 0.00 | 0.00 |
| 363 | LC7 | MIN $M_z$ | 0.000 | 0.14 | 0.00 | 0.00 | 0.00 | 0.00 | 0.00 |
| | **Section No. 15: IPE 180 \| Euronorm 19-57** | | | | | | | | |
| 157 | LC1 | MAX N | 0.000 | 4.97 | -0.03 | 3.97 | 0.00 | 0.00 | -0.02 |
| 361 | LC1 | MIN N | 0.000 | -4.81 | 0.01 | 0.31 | 0.00 | 1.86 | 0.02 |
| 362 | LC5 | MAX $V_y$ | 2.375 | -0.25 | 1.45 | 0.00 | 0.00 | 0.00 | -0.58 |
| 227 | LC5 | MIN $V_y$ | 0.000 | -0.19 | -1.43 | -0.14 | 0.00 | -0.14 | -0.57 |
| 137 | LC1 | MAX $V_z$ | 0.000 | 0.35 | 0.00 | 29.85 | 0.00 | -17.43 | 0.00 |
| 154 | LC1 | MIN $V_z$ | 0.660 | -0.08 | -0.06 | -11.53 | 0.02 | -6.47 | 0.04 |
| 154 | LC1 | MAX $M_T$ | 0.000 | -0.08 | -0.06 | -8.03 | 0.02 | -0.01 | 0.00 |
| 359 | LC1 | MIN $M_T$ | 0.000 | 0.21 | 0.00 | 2.52 | -0.01 | 2.61 | 0.00 |
| 199 | LC1 | MAX $M_y$ | 0.000 | -0.31 | 0.00 | -0.83 | 0.00 | 10.68 | 0.00 |
| 137 | LC1 | MIN $M_y$ | 0.000 | 0.35 | 0.00 | 29.85 | 0.00 | -17.43 | 0.00 |
| 362 | LC5 | MAX $M_z$ | 1.188 | -0.25 | 0.07 | 0.00 | 0.00 | 0.00 | 0.32 |
| 199 | LC5 | MIN $M_z$ | 0.000 | 0.04 | -1.40 | 0.00 | 0.00 | 0.00 | -0.58 |
| | **Section No. 16: QRO 80x4 \| EN 10219-2:2006** | | | | | | | | |
| 472 | LC6 | MAX N | 0.000 | 1.60 | 0.00 | 0.00 | -0.03 | 0.00 | 0.00 |
| 469 | LC5 | MIN N | 0.000 | -4.37 | 0.00 | 0.00 | 0.01 | 0.00 | 0.00 |
| 189 | LC7 | MAX $V_y$ | 0.000 | -0.01 | 0.05 | 0.00 | 0.00 | 0.00 | 0.06 |
| 189 | LC8 | MIN $V_y$ | 0.000 | 0.01 | -0.05 | 0.00 | 0.00 | 0.00 | -0.06 |
| 192 | LC6 | MAX $V_z$ | 2.785 | 0.32 | 0.01 | 4.55 | 0.00 | 0.54 | -0.01 |
| 192 | LC4 | MIN $V_z$ | 2.785 | 0.49 | 0.00 | -7.11 | 0.00 | -0.84 | 0.00 |
| 197 | LC6 | MAX $M_T$ | 0.000 | 0.35 | 0.00 | -2.70 | 0.04 | 0.02 | -0.01 |
| 100 | LC1 | MIN $M_T$ | 0.000 | -0.05 | 0.00 | 0.10 | -0.08 | 0.00 | 0.00 |
| 496 | LC4 | MAX $M_y$ | 1.393 | 0.02 | 0.00 | 0.48 | 0.00 | 3.67 | 0.00 |
| 496 | LC6 | MIN $M_y$ | 1.393 | 0.32 | -0.02 | -0.31 | -0.01 | -2.35 | 0.00 |
| 189 | LC8 | MAX $M_z$ | 2.785 | 0.01 | -0.05 | 0.00 | 0.00 | 0.00 | 0.07 |
| 189 | LC7 | MIN $M_z$ | 2.785 | -0.01 | 0.05 | 0.00 | 0.00 | 0.00 | -0.07 |
| | **Section No. 18: QRO 80x4 \| EN 10219-2:2006** | | | | | | | | |
| 493 | LC6 | MAX N | 1.668 | 16.75 | 0.36 | 0.00 | 0.01 | 0.00 | 1.19 |
| 493 | LC4 | MIN N | 0.000 | -27.05 | 0.00 | 0.00 | -0.01 | 0.00 | 0.00 |
| 72 | LC6 | MAX $V_y$ | 0.000 | -0.99 | 2.07 | 0.00 | 0.08 | 0.00 | 0.00 |
| 498 | LC6 | MIN $V_y$ | 0.000 | 4.59 | -3.84 | 0.09 | 0.00 | -0.02 | -1.04 |
| 72 | LC1 | MAX $V_z$ | 0.000 | -1.47 | 0.00 | 1.32 | 0.00 | 0.00 | 0.00 |
| 72 | LC1 | MIN $V_z$ | 3.563 | -1.47 | 0.00 | -1.32 | 0.00 | 0.00 | 0.00 |
| 494 | LC6 | MAX $M_T$ | 0.000 | -0.41 | 2.07 | 0.00 | 0.09 | 0.00 | 0.00 |
| 222 | LC6 | MIN $M_T$ | 0.000 | -0.83 | 2.07 | 0.00 | -0.08 | 0.00 | 0.00 |
| 72 | LC1 | MAX $M_y$ | 1.781 | -1.47 | 0.00 | 0.00 | 0.00 | 1.18 | 0.00 |
| 501 | LC8 | MIN $M_y$ | 3.039 | -0.08 | 0.00 | -0.02 | 0.00 | -0.07 | -0.01 |
| 493 | LC5 | MAX $M_z$ | 1.390 | -11.99 | 0.00 | 0.00 | 0.00 | 0.00 | 1.24 |
| 72 | LC6 | MIN $M_z$ | 1.781 | -0.99 | 0.00 | 0.00 | 0.08 | 0.00 | -1.84 |
| | **Section No. 19: QRO 80x4 \| EN 10219-2:2006** | | | | | | | | |
| 528 | LC6 | MAX N | 0.000 | 10.24 | 0.00 | 0.00 | -0.12 | 0.00 | 0.00 |
| 528 | LC1 | MIN N | 0.000 | -21.05 | 0.00 | 0.00 | 0.08 | -0.01 | 0.00 | 0.00 |
| 356 | LC6 | MAX $V_y$ | 0.000 | 1.06 | 0.59 | -0.07 | -0.02 | 0.00 | 0.00 |
| 218 | LC1 | MIN $V_y$ | 0.000 | -3.95 | -0.94 | 0.15 | -0.01 | -0.22 | -1.85 |
| 218 | LC5 | MAX $V_z$ | 0.000 | -1.96 | 0.06 | 0.86 | -0.02 | -1.35 | 0.22 |
| 218 | LC6 | MIN $V_z$ | 0.000 | 2.46 | 0.06 | -1.18 | 0.03 | 1.85 | -0.05 |
| 528 | LC5 | MAX $M_T$ | 0.000 | -8.21 | 0.00 | 0.00 | 0.08 | 0.00 | 0.00 |
| 528 | LC6 | MIN $M_T$ | 0.000 | 10.24 | 0.00 | 0.00 | -0.12 | 0.00 | 0.00 |
| 218 | LC6 | MAX $M_y$ | 0.000 | 2.46 | 0.06 | -1.18 | 0.03 | 1.85 | -0.05 |
| 218 | LC6 | MIN $M_y$ | 3.210 | 2.46 | 0.06 | -1.18 | 0.03 | -1.93 | -0.25 |
| 356 | LC5 | MAX $M_z$ | 3.366 | -0.61 | -0.48 | -0.04 | 0.00 | -0.12 | 1.61 |
| 356 | LC6 | MIN $M_z$ | 3.366 | 1.06 | 0.59 | -0.07 | -0.02 | -0.25 | -2.00 |
| | **Section No. 20: IPE 180 \| Euronorm 19-57** | | | | | | | | |
| 136 | LC6 | MAX N | 0.000 | 1.04 | 0.00 | 0.00 | 0.00 | 0.00 | 0.00 |
| 115 | LC5 | MIN N | 0.000 | -3.39 | 0.00 | 0.00 | 0.00 | 0.00 | 0.00 |
| 460 | LC5 | MAX $V_y$ | 0.000 | -2.20 | 3.93 | 0.00 | 0.00 | 0.00 | 0.00 |
| 460 | LC5 | MIN $V_y$ | 2.780 | -2.20 | -3.93 | 0.00 | 0.00 | 0.00 | 0.00 |
| 108 | LC1 | MAX $V_z$ | 0.000 | -0.24 | 0.00 | 25.13 | 0.00 | 0.00 | 0.00 |
| 108 | LC1 | MIN $V_z$ | 3.820 | -0.24 | 0.00 | -25.13 | 0.00 | 0.00 | 0.00 |
| 136 | LC4 | MAX $M_T$ | 0.000 | 0.13 | 0.00 | 0.00 | 0.00 | 0.00 | 0.00 |
| 107 | LC1 | MIN $M_T$ | 0.000 | -0.39 | 0.00 | 13.98 | 0.00 | 0.00 | 0.00 |
| 108 | LC1 | MAX $M_y$ | 1.910 | -0.24 | 0.00 | 0.00 | 0.00 | 24.00 | 0.00 |
| 119 | LC1 | MIN $M_y$ | 0.000 | 0.11 | 0.00 | 18.29 | 0.00 | 0.00 | 0.00 |
| 107 | LC5 | MAX $M_z$ | 0.000 | -0.66 | 2.44 | 0.00 | 0.00 | 0.00 | 0.00 |
| 460 | LC5 | MIN $M_z$ | 1.390 | -2.20 | 0.00 | 0.00 | 0.00 | 0.00 | -2.73 |
| | **Section No. 21: HE B 260 \| Euronorm 53-62** | | | | | | | | |
| 75 | LC6 | MAX N | 0.000 | 304.32 | -1.29 | -14.23 | 0.00 | 65.34 | -4.22 |

## 4.3 CROSS-SECTIONS - INTERNAL FORCES

| Member No. | LC/CO | Node No. | Location x [m] | Forces [kN] N | $V_y$ | $V_z$ | Moments [kNm] $M_T$ | $M_y$ | $M_z$ |
|---|---|---|---|---|---|---|---|---|---|
| 63 | LC4 | MIN N | 0.000 | -434.82 | -0.28 | 0.69 | 0.00 | -9.82 | -0.19 |
| 347 | LC7 | MAX $V_y$ | 0.000 | 6.62 | 5.63 | -4.14 | -0.01 | -10.27 | -3.72 |
| 345 | LC1 | MIN $V_y$ | 0.000 | -141.66 | -6.73 | -8.49 | 0.00 | -3.50 | 7.69 |
| 81 | LC5 | MAX $V_z$ | 0.000 | -153.88 | -1.07 | 14.06 | 0.00 | -61.09 | -3.43 |
| 345 | LC4 | MIN $V_z$ | 0.000 | -432.60 | -1.27 | -26.21 | 0.00 | -3.40 | 1.38 |
| 166 | LC6 | MAX $M_T$ | 0.000 | 229.92 | 1.06 | -8.09 | 0.02 | -15.47 | 2.31 |
| 64 | LC1 | MIN $M_T$ | 0.000 | -89.62 | 0.00 | 2.85 | -0.02 | -7.90 | -0.06 |
| 81 | LC6 | MAX $M_y$ | 0.000 | 303.25 | -1.38 | -14.93 | 0.00 | 67.66 | -4.40 |
| 81 | LC5 | MIN $M_y$ | 0.000 | -153.88 | -1.07 | 14.06 | 0.00 | -61.09 | -3.43 |
| 63 | LC1 | MAX $M_z$ | 5.590 | -176.26 | -2.45 | -0.05 | 0.00 | -1.46 | 9.69 |
| 166 | LC1 | MIN $M_z$ | 0.000 | -146.83 | -6.70 | -0.67 | 0.00 | -1.46 | -12.71 |
| | **Section No. 22: HE A 200 \| Euronorm 53-62** | | | | | | | | |
| 122 | LC4 | MAX N | 0.000 | 48.59 | -0.12 | 0.94 | 0.00 | -1.67 | -0.62 |
| 125 | LC1 | MIN N | 0.000 | -150.50 | 0.56 | 1.53 | 0.00 | -2.86 | 1.11 |
| 527 | LC1 | MAX $V_y$ | 0.000 | -26.76 | 12.21 | 2.69 | 0.00 | 6.45 | 13.58 |
| 173 | LC1 | MIN $V_y$ | 0.000 | -40.59 | -5.09 | 2.69 | 0.00 | -5.34 | -8.76 |
| 133 | LC5 | MAX $V_z$ | 0.000 | 4.86 | -0.32 | 6.33 | 0.00 | -20.63 | -0.92 |
| 133 | LC6 | MIN $V_z$ | 0.000 | -1.28 | -0.57 | -7.28 | 0.00 | 23.78 | -1.62 |
| 527 | LC6 | MAX $M_T$ | 0.000 | 0.55 | -4.94 | -1.23 | 0.05 | -1.71 | -5.21 |
| 527 | LC5 | MIN $M_T$ | 0.000 | 2.52 | 3.89 | -0.82 | -0.04 | -1.14 | 4.11 |
| 133 | LC6 | MAX $M_y$ | 0.000 | -1.28 | -0.57 | -7.28 | 0.00 | 23.78 | -1.62 |
| 133 | LC5 | MIN $M_y$ | 0.000 | 4.86 | -0.32 | 6.33 | 0.00 | -20.63 | -0.92 |
| 131 | LC1 | MAX $M_z$ | 5.590 | -97.29 | -4.59 | 2.41 | 0.00 | 8.87 | 17.38 |
| 176 | LC1 | MIN $M_z$ | 0.000 | -12.96 | -2.95 | 0.96 | 0.00 | -3.67 | -11.23 |
| | **Section No. 23: HE A 200 \| Euronorm 53-62** | | | | | | | | |
| 56 | LC4 | MAX N | 0.000 | 163.26 | 0.01 | -0.01 | 0.00 | 0.00 | 0.00 |
| 56 | LC6 | MIN N | 0.000 | -52.05 | -0.02 | -0.18 | 0.00 | 0.00 | 0.00 |
| 60 | LC8 | MAX $V_y$ | 0.000 | -3.42 | 0.07 | -0.14 | 0.00 | 0.00 | 0.00 |
| 60 | LC7 | MIN $V_y$ | 0.000 | 3.42 | -0.07 | 0.14 | 0.00 | 0.00 | 0.00 |
| 56 | LC8 | MAX $V_z$ | 0.000 | 6.74 | 0.07 | 0.27 | 0.00 | 0.00 | 0.00 |
| 56 | LC7 | MIN $V_z$ | 0.000 | -6.74 | -0.07 | -0.27 | 0.00 | 0.00 | 0.00 |
| 54 | LC8 | MAX $M_T$ | 0.000 | 4.47 | 0.06 | 0.17 | 0.00 | 0.00 | 0.00 |
| 54 | LC7 | MIN $M_T$ | 0.000 | -4.47 | -0.06 | -0.17 | 0.00 | 0.00 | 0.00 |
| 56 | LC8 | MAX $M_y$ | 8.900 | 6.74 | 0.07 | 0.27 | 0.00 | 2.42 | -0.64 |
| 56 | LC7 | MIN $M_y$ | 8.900 | -6.74 | -0.07 | -0.27 | 0.00 | -2.42 | 0.64 |
| 60 | LC7 | MAX $M_z$ | 8.900 | 3.42 | -0.07 | 0.14 | 0.00 | 1.27 | 0.66 |
| 60 | LC8 | MIN $M_z$ | 8.900 | -3.42 | 0.07 | -0.14 | 0.00 | -1.27 | -0.66 |
| | **Section No. 24: RO 101.6x3 \| EN 10219-2:2006** | | | | | | | | |
| 510 | LC7 | MAX N | 0.000 | 16.32 | 0.00 | 0.00 | -0.02 | 0.00 | 0.00 |
| 510 | LC8 | MIN N | 0.000 | -16.32 | 0.00 | 0.00 | 0.02 | 0.00 | 0.00 |
| 512 | LC5 | MAX $V_y$ | 0.000 | 1.47 | 0.00 | 0.00 | -0.01 | 0.00 | 0.00 |
| 510 | LC5 | MIN $V_y$ | 0.000 | 1.87 | 0.00 | 0.00 | -0.01 | 0.00 | 0.00 |
| 515 | LC1 | MAX $V_z$ | 0.000 | 0.06 | 0.00 | 0.25 | -0.01 | 0.00 | 0.00 |
| 515 | LC1 | MIN $V_z$ | 6.745 | 0.07 | 0.00 | -0.25 | -0.01 | 0.00 | 0.00 |
| 507 | LC4 | MAX $M_T$ | 0.000 | -0.56 | 0.00 | 0.00 | 0.49 | 0.00 | 0.00 |
| 508 | LC4 | MIN $M_T$ | 0.000 | 0.40 | 0.00 | 0.00 | -0.51 | 0.00 | 0.00 |
| 515 | LC1 | MAX $M_y$ | 3.372 | 0.07 | 0.00 | 0.00 | -0.01 | 0.41 | 0.00 |
| 513 | LC1 | MIN $M_y$ | 0.000 | 0.12 | 0.00 | 0.23 | -0.01 | 0.00 | 0.00 |
| 509 | LC7 | MAX $M_z$ | 0.000 | -16.32 | 0.00 | 0.00 | -0.02 | 0.00 | 0.00 |
| 509 | LC8 | MIN $M_z$ | 0.000 | 16.32 | 0.00 | 0.00 | 0.02 | 0.00 | 0.00 |
| | **Section No. 25: RO 76.1x3 \| EN 10219-2:2006** | | | | | | | | |
| 520 | LC7 | MAX N | 0.000 | 8.96 | 0.00 | 0.00 | -0.01 | 0.00 | 0.00 |
| 520 | LC8 | MIN N | 0.000 | -8.96 | 0.00 | 0.00 | 0.01 | 0.00 | 0.00 |
| 490 | LC6 | MAX $V_y$ | 0.000 | 3.66 | 0.00 | 0.00 | 0.00 | 0.00 | 0.00 |
| 488 | LC5 | MIN $V_y$ | 0.000 | 4.93 | 0.00 | 0.00 | 0.00 | 0.00 | 0.00 |
| 522 | LC1 | MAX $V_z$ | 0.000 | -1.06 | 0.00 | 0.12 | 0.02 | 0.00 | 0.00 |
| 522 | LC1 | MIN $V_z$ | 4.522 | -1.07 | 0.00 | -0.12 | 0.02 | 0.00 | 0.00 |
| 517 | LC4 | MAX $M_T$ | 0.000 | -0.27 | 0.00 | 0.00 | 0.25 | 0.00 | 0.00 |
| 518 | LC4 | MIN $M_T$ | 0.000 | 0.11 | 0.00 | 0.00 | -0.26 | 0.00 | 0.00 |
| 522 | LC1 | MAX $M_y$ | 2.261 | -1.07 | 0.00 | 0.00 | 0.02 | 0.14 | 0.00 |
| 519 | LC1 | MIN $M_y$ | 0.000 | 0.28 | 0.00 | 0.12 | -0.04 | 0.00 | 0.00 |
| 474 | LC7 | MAX $M_z$ | 0.000 | 1.73 | 0.00 | 0.00 | 0.00 | 0.00 | 0.00 |
| 474 | LC8 | MIN $M_z$ | 0.000 | -1.73 | 0.00 | 0.00 | 0.00 | 0.00 | 0.00 |
| | **Section No. 26: QRO 120x5 \| EN 10219-2:2006** | | | | | | | | |
| 233 | LC5 | MAX N | 0.000 | 3.40 | -0.86 | -0.07 | 0.09 | 0.00 | 0.00 |
| 233 | LC6 | MIN N | 0.000 | -3.43 | 1.15 | 0.01 | -0.13 | 0.00 | 0.00 |
| 282 | LC6 | MAX $V_y$ | 0.000 | 1.22 | 2.76 | -0.35 | 0.29 | 0.22 | 1.70 |
| 282 | LC1 | MIN $V_y$ | 0.000 | 0.19 | -2.01 | -6.70 | -0.20 | 4.12 | -1.24 |
| 282 | LC7 | MAX $V_z$ | 0.000 | -0.45 | 0.44 | 1.15 | 0.01 | -0.71 | 0.27 |
| 282 | LC1 | MIN $V_z$ | 0.000 | 0.19 | -2.01 | -6.70 | -0.20 | 4.12 | -1.24 |
| 282 | LC6 | MAX $M_T$ | 0.000 | 1.22 | 2.76 | -0.35 | 0.29 | 0.22 | 1.70 |
| 282 | LC1 | MIN $M_T$ | 0.000 | 0.19 | -2.01 | -6.70 | -0.20 | 4.12 | -1.24 |
| 282 | LC1 | MAX $M_y$ | 0.000 | 0.19 | -2.01 | -6.70 | -0.20 | 4.12 | -1.24 |
| 233 | LC1 | MIN $M_y$ | 3.140 | -0.40 | -0.47 | -0.43 | -0.04 | -1.35 | 1.49 |
| 233 | LC5 | MAX $M_z$ | 3.140 | 3.40 | -0.86 | -0.07 | 0.09 | -0.24 | 2.70 |
| 233 | LC6 | MIN $M_z$ | 3.140 | -3.43 | 1.15 | 0.01 | -0.13 | 0.05 | -3.60 |
| | **Section No. 27: IF HE A 240-20 \| ArcelorMittal (EN 10365:2017)** | | | | | | | | |
| 342 | LC4 | MAX N | 0.000 | 190.04 | -230.02 | 0.64 | -0.12 | -0.62 | -131.75 |
| 342 | LC6 | MIN N | 0.000 | -126.99 | 166.51 | -4.62 | 0.28 | -0.07 | 89.42 |
| 342 | LC6 | MAX $V_y$ | 0.615 | -126.99 | 166.76 | -4.62 | 0.28 | -2.91 | -13.10 |
| 342 | LC4 | MIN $V_y$ | 0.000 | 190.04 | -230.02 | 0.64 | -0.12 | -0.62 | -131.75 |
| 342 | LC8 | MAX $V_z$ | 0.000 | 1.37 | -2.65 | 3.20 | 0.02 | -5.30 | -1.74 |
| 342 | LC6 | MIN $V_z$ | 0.000 | -126.99 | 166.51 | -4.62 | 0.28 | -0.07 | 89.42 |
| 342 | LC6 | MAX $M_T$ | 0.000 | -126.99 | 166.51 | -4.62 | 0.28 | -0.07 | 89.42 |
| 342 | LC1 | MIN $M_T$ | 0.000 | 48.35 | -86.38 | 1.36 | -0.18 | -4.50 | -33.26 |
| 342 | LC7 | MAX $M_y$ | 0.000 | -1.37 | 2.65 | -3.20 | -0.02 | 5.30 | 1.74 |
| 342 | LC8 | MIN $M_y$ | 0.000 | 1.37 | -2.65 | 3.20 | 0.02 | -5.30 | -1.74 |

## 4.3 CROSS-SECTIONS - INTERNAL FORCES

| Member No. | LC/CO | Node No. | Location x [m] | Forces [kN] N | $V_y$ | $V_z$ | Moments [kNm] $M_T$ | $M_y$ | $M_z$ | |
|---|---|---|---|---|---|---|---|---|---|---|
| 342 | LC6 | MAX $M_z$ | 0.000 | -126.99 | 166.51 | -4.62 | 0.28 | -0.07 | ▷ 89.42 | |
| 342 | LC4 | MIN $M_z$ | 0.000 | 190.04 | -230.02 | 0.64 | -0.12 | -0.62 | ▷ -131.75 | |

## 4.3 CROSS-SECTIONS - INTERNAL FORCES

Result Combinations

| Member No. | RC | Node No. | Location x [m] | | Forces [kN] N | $V_y$ | $V_z$ | Moments [kNm] $M_T$ | $M_y$ | $M_z$ | Corresponding Load Cases |
|---|---|---|---|---|---|---|---|---|---|---|---|
| | **Section No. 1: IF HE A 240-15 \| Euronorm 53-62** | | | | | | | | | | |
| 231 | RC11 | | 8.060 | MAX N | ▷ 30.19 | -0.02 | -3.71 | 0.98 | -13.93 | 0.21 | CO 116 |
| 231 | RC11 | | 0.000 | MIN N | ▷ -728.14 | -0.60 | 0.55 | -1.77 | -21.07 | -12.06 | CO 33 |
| 231 | RC10 | | 0.000 | MAX $V_y$ | -129.02 | ▷ 9.05 | 0.29 | -1.05 | -3.37 | 69.85 | LC 1,2,9-18 |
| 231 | RC11 | | 7.254 | MIN $V_y$ | -716.87 | ▷ -9.11 | 3.69 | 0.53 | -2.59 | -3.44 | CO 42 |
| 231 | RC9 | | 0.000 | MAX $V_z$ | -15.82 | 0.31 | ▷ 9.26 | -0.22 | -38.50 | 2.62 | LC 9-18 |
| 231 | RC10 | | 0.000 | MIN $V_z$ | -112.69 | -0.27 | ▷ -9.30 | 0.17 | 36.66 | -2.33 | LC 1,2,9-18 |
| 231 | RC9 | | 0.000 | MAX $M_T$ | 0.80 | -2.03 | -0.47 | ▷ 4.43 | 1.98 | -14.35 | LC 9-18 |
| 231 | RC10 | | 0.000 | MIN $M_T$ | -129.30 | 2.08 | 0.43 | ▷ -4.49 | -3.82 | 14.64 | LC 1,2,9-18 |
| 231 | RC9 | | 0.000 | MAX $M_y$ | 15.82 | -0.36 | -9.26 | 0.23 | ▷ 38.50 | -2.97 | LC 9-18 |
| 231 | RC10 | | 0.000 | MIN $M_y$ | -144.32 | 0.40 | 9.23 | -0.28 | ▷ -40.33 | 3.27 | LC 1,2,9-18 |
| 231 | RC10 | | 0.000 | MAX $M_z$ | -129.06 | 9.05 | 0.32 | -0.97 | -3.48 | ▷ 69.87 | LC 1,2,9-18 |
| 231 | RC9 | | 0.000 | MIN $M_z$ | 0.56 | -9.01 | -0.35 | 0.91 | 1.64 | ▷ -69.57 | LC 9-18 |
| | **Section No. 2: HE A 200 \| Euronorm 53-62** | | | | | | | | | | |
| 1 | RC11 | | 7.890 | MAX N | ▷ 397.01 | 1.46 | -0.07 | -0.01 | -0.30 | -3.89 | CO 33 |
| 1 | RC11 | | 0.000 | MIN N | ▷ -23.73 | -0.16 | -0.05 | 0.00 | 0.00 | 0.00 | CO 116 |
| 1 | RC11 | | 7.890 | MAX $V_y$ | 397.01 | ▷ 1.46 | -0.07 | -0.01 | -0.30 | -3.89 | CO 33 |
| 1 | RC9 | | 0.000 | MIN $V_y$ | -15.58 | ▷ -0.36 | -0.03 | 0.00 | 0.00 | 0.00 | LC 9-18 |
| 1 | RC10 | | 0.000 | MAX $V_z$ | 62.64 | 0.05 | ▷ 0.69 | 0.00 | 0.00 | 0.00 | LC 1,2,9-18 |
| 1 | RC11 | | 7.890 | MIN $V_z$ | 396.74 | 1.45 | ▷ -1.18 | -0.03 | -4.89 | -3.85 | CO 42 |
| 1 | RC9 | | 0.000 | MAX $M_T$ | -0.69 | -0.02 | -0.22 | ▷ 0.01 | 0.00 | 0.00 | LC 9-18 |
| 1 | RC11 | | 7.890 | MIN $M_T$ | 396.74 | 1.45 | -1.18 | ▷ -0.03 | -4.89 | -3.85 | CO 42 |
| 1 | RC10 | | 7.890 | MAX $M_y$ | 65.97 | 0.05 | 0.69 | 0.00 | ▷ 5.45 | -0.41 | LC 1,2,9-18 |
| 1 | RC9 | | 7.890 | MIN $M_y$ | -0.87 | -0.02 | -0.69 | 0.00 | ▷ -5.41 | 0.13 | LC 9-18 |
| 1 | RC9 | | 7.890 | MAX $M_z$ | -15.58 | -0.36 | -0.03 | 0.00 | -0.25 | ▷ 2.85 | LC 9-18 |
| 1 | RC11 | | 7.890 | MIN $M_z$ | 397.01 | 1.46 | -0.07 | -0.01 | -0.30 | ▷ -3.89 | CO 33 |
| | **Section No. 3: HE B 200 \| Euronorm 53-62** | | | | | | | | | | |
| 34 | RC11 | | 2.770 | MAX N | ▷ 174.57 | -0.04 | 1.72 | 0.01 | 0.00 | 0.06 | CO 119 |
| 34 | RC11 | | 0.000 | MIN N | ▷ -604.93 | -0.06 | 6.02 | 0.03 | -19.22 | -0.12 | CO 42 |
| 4 | RC10 | | 0.000 | MAX $V_y$ | -83.67 | ▷ 0.87 | -0.53 | -0.03 | 1.38 | 2.23 | LC 1,2,9-18 |
| 4 | RC9 | | 0.000 | MIN $V_y$ | 0.37 | ▷ -0.87 | 0.07 | 0.03 | -0.17 | -2.22 | LC 9-18 |
| 34 | RC11 | | 2.770 | MAX $V_z$ | -520.45 | 0.31 | ▷ 9.82 | 0.02 | 0.00 | 0.06 | CO 27 |
| 4 | RC11 | | 2.617 | MIN $V_z$ | -481.76 | -0.02 | ▷ -4.05 | -0.01 | 0.00 | 0.02 | CO 33 |
| 34 | RC11 | | 0.000 | MAX $M_T$ | -604.87 | -0.05 | 6.04 | ▷ 0.04 | -19.28 | -0.06 | CO 34 |
| 4 | RC11 | | 0.000 | MIN $M_T$ | -483.82 | -0.26 | -3.48 | ▷ -0.07 | 10.07 | -0.85 | CO 42 |
| 34 | RC9 | | 0.000 | MAX $M_y$ | -12.69 | -0.04 | -3.99 | 0.01 | ▷ 11.04 | -0.11 | LC 9-18 |
| 34 | RC11 | | 0.000 | MIN $M_y$ | -522.77 | 0.15 | 8.23 | -0.02 | ▷ -25.73 | 0.75 | CO 27 |
| 4 | RC10 | | 0.000 | MAX $M_z$ | -83.69 | 0.87 | -0.53 | -0.03 | 1.40 | ▷ 2.23 | LC 1,2,9-18 |
| 4 | RC9 | | 0.000 | MIN $M_z$ | 0.39 | -0.87 | 0.07 | 0.03 | -0.19 | ▷ -2.22 | LC 9-18 |
| | **Section No. 4: IF IPE 400-6 \| Euronorm 19-57** | | | | | | | | | | |
| 274 | RC11 | | 2.228 | MAX N | ▷ 179.05 | 1.10 | 107.46 | -0.52 | 74.20 | -1.63 | CO 120 |
| 254 | RC11 | | 0.000 | MIN N | ▷ -575.85 | 1.58 | 107.08 | -0.23 | -234.16 | 3.43 | CO 41 |
| 8 | RC10 | | 0.000 | MAX $V_y$ | -64.27 | ▷ 4.93 | 19.13 | -0.01 | -35.26 | 4.16 | LC 1,2,9-18 |
| 8 | RC11 | | 0.000 | MIN $V_y$ | -382.26 | ▷ -6.05 | 120.84 | 0.16 | -219.28 | -6.89 | CO 42 |
| 274 | RC11 | | 2.785 | MAX $V_z$ | 141.58 | -1.03 | ▷ 122.51 | 0.07 | 150.89 | 1.71 | CO 119 |
| 258 | RC11 | | 2.785 | MIN $V_z$ | -480.66 | -1.88 | ▷ -241.86 | 1.60 | -309.72 | 3.49 | CO 41 |
| 258 | RC11 | | 2.785 | MAX $M_T$ | -1.41 | -1.20 | 27.17 | ▷ 6.05 | 32.62 | 2.27 | CO 19 |
| 175 | RC11 | | 0.805 | MIN $M_T$ | -536.31 | 0.40 | -190.43 | ▷ -5.39 | 141.65 | -1.36 | CO 34 |
| 258 | RC11 | | 0.000 | MAX $M_y$ | -481.63 | -0.96 | -225.72 | 2.15 | ▷ 341.19 | -0.53 | CO 41 |
| 258 | RC11 | | 2.785 | MIN $M_y$ | -480.66 | -1.88 | -241.86 | 1.60 | ▷ -309.72 | 3.49 | CO 41 |
| 195 | RC10 | | 4.293 | MAX $M_z$ | -63.02 | -3.28 | -2.73 | -0.02 | 11.35 | ▷ 10.88 | LC 1,2,9-18 |
| 195 | RC9 | | 4.293 | MIN $M_z$ | -0.07 | 3.27 | 0.07 | 0.02 | -0.17 | ▷ -10.88 | LC 9-18 |
| | **Section No. 5: RO 168.3x6.3 \| EN 10219-2:2006** | | | | | | | | | | |
| 261 | RC11 | | 0.000 | MAX N | ▷ 721.07 | 0.00 | 0.35 | 0.08 | 0.00 | 0.00 | CO 41 |
| 277 | RC11 | | 3.624 | MIN N | ▷ -213.39 | 0.00 | -0.39 | 0.00 | 0.00 | 0.00 | CO 119 |
| 30 | RC11 | | 0.000 | MAX $V_y$ | 294.42 | ▷ 0.01 | 0.82 | 0.01 | 0.00 | 0.00 | CO 66 |
| 30 | RC11 | | 8.568 | MIN $V_y$ | 295.15 | ▷ -0.01 | -0.82 | 0.01 | 0.00 | 0.00 | CO 66 |
| 264 | RC11 | | 0.000 | MAX $V_z$ | -145.11 | 0.00 | ▷ 2.72 | -0.04 | 0.00 | 0.00 | CO 52 |
| 264 | RC11 | | 8.811 | MIN $V_z$ | -144.35 | 0.00 | ▷ -2.71 | -0.04 | 0.00 | 0.00 | CO 52 |
| 261 | RC11 | | 1.812 | MAX $M_T$ | -97.02 | 0.00 | 0.00 | ▷ 0.15 | 0.46 | 0.00 | CO 52 |
| 260 | RC11 | | 4.406 | MIN $M_T$ | -77.35 | 0.00 | 0.00 | ▷ -0.11 | 4.44 | 0.00 | CO 52 |
| 264 | RC11 | | 4.406 | MAX $M_y$ | -144.74 | 0.00 | 0.00 | -0.04 | ▷ 6.70 | 0.00 | CO 52 |
| 261 | RC11 | | 0.000 | MIN $M_y$ | 243.94 | 0.00 | 0.42 | 0.13 | ▷ 0.00 | 0.00 | CO 15 |
| 30 | RC11 | | 4.284 | MAX $M_z$ | 7.78 | 0.00 | 0.00 | 0.00 | 2.94 | ▷ 0.01 | CO 51 |
| 30 | RC11 | | 4.284 | MIN $M_z$ | 168.23 | 0.00 | 0.00 | 0.00 | 1.90 | ▷ -0.01 | CO 46 |
| | **Section No. 6: HE B 260 \| Euronorm 53-62** | | | | | | | | | | |
| 352 | RC11 | | 0.100 | MAX N | ▷ 615.74 | -14.32 | 69.24 | 0.15 | 32.75 | 17.22 | CO 41 |
| 67 | RC11 | | 0.000 | MIN N | ▷ -502.58 | -2.77 | -20.83 | 0.00 | 105.13 | -11.38 | CO 52 |
| 112 | RC10 | | 0.000 | MAX $V_y$ | 46.29 | ▷ 17.84 | 1.54 | 0.00 | -2.66 | 31.23 | LC 1,2,9-18 |
| 492 | RC11 | | 0.000 | MIN $V_y$ | 382.33 | ▷ -30.85 | 1.35 | -0.24 | 5.03 | -62.47 | CO 14 |
| 288 | RC11 | | 0.000 | MAX $V_z$ | 445.75 | -24.85 | ▷ 556.24 | -0.86 | -308.71 | -12.16 | CO 41 |
| 341 | RC11 | | 0.554 | MIN $V_z$ | -137.57 | 4.36 | ▷ -177.20 | 0.01 | 1.48 | -4.08 | CO 119 |
| 62 | RC11 | | 5.590 | MAX $M_T$ | 342.44 | -11.46 | 24.38 | ▷ 0.45 | 23.22 | 38.74 | CO 57 |
| 288 | RC11 | | 0.000 | MIN $M_T$ | 445.75 | -24.85 | 556.24 | ▷ -0.86 | -308.71 | -12.16 | CO 41 |
| 79 | RC11 | | 0.000 | MAX $M_y$ | -358.78 | 0.65 | -25.03 | -0.01 | ▷ 118.48 | 2.17 | CO 55 |
| 288 | RC11 | | 0.000 | MIN $M_y$ | 445.75 | -24.85 | 556.24 | -0.86 | ▷ -308.71 | -12.16 | CO 41 |
| 62 | RC10 | | 5.590 | MAX $M_z$ | -28.35 | -17.20 | 4.00 | -0.01 | 4.65 | ▷ 50.65 | LC 1,2,9-18 |
| 492 | RC11 | | 0.000 | MIN $M_z$ | 142.89 | -29.39 | -11.26 | 0.11 | -25.36 | ▷ -62.97 | CO 16 |
| | **Section No. 7: HE A 240 \| Euronorm 53-62** | | | | | | | | | | |

## 4.3 CROSS-SECTIONS - INTERNAL FORCES

Result Combinations

| Member No. | RC | Node No. | Location x [m] | | Forces [kN] N | $V_y$ | $V_z$ | Moments [kNm] $M_T$ | $M_y$ | $M_z$ | Corresponding Load Cases |
|---|---|---|---|---|---|---|---|---|---|---|---|
| 213 | RC11 | | 3.140 | MAX N | ▷ 527.57 | -1.21 | -0.97 | 0.05 | -10.09 | 4.33 | CO 42 |
| 86 | RC11 | | 0.000 | MIN N | ▷ -256.60 | 5.94 | -2.30 | 0.00 | 2.64 | 30.41 | CO 51 |
| 86 | RC11 | | 3.735 | MAX $V_y$ | -154.43 | ▷ 8.75 | -1.36 | -0.05 | -4.55 | 0.96 | CO 55 |
| 86 | RC11 | | 0.000 | MIN $V_y$ | 300.58 | ▷ -8.81 | -6.94 | 0.00 | 20.16 | -28.02 | CO 134 |
| 86 | RC9 | | 0.000 | MAX $V_z$ | -82.56 | -1.43 | ▷ 22.06 | 0.00 | -62.08 | -4.68 | LC 9-18 |
| 86 | RC10 | | 0.000 | MIN $V_z$ | 66.29 | 1.91 | ▷ -22.06 | 0.00 | 61.04 | 6.31 | LC 1,2,9-18 |
| 213 | RC11 | | 0.000 | MAX $M_T$ | 380.87 | 1.06 | 6.54 | ▷ 0.13 | -20.09 | 6.02 | CO 57 |
| 86 | RC11 | | 4.980 | MIN $M_T$ | -197.94 | 7.28 | -10.37 | ▷ -0.20 | -25.79 | -8.96 | CO 52 |
| 86 | RC9 | | 0.000 | MAX $M_y$ | 83.09 | 1.36 | -22.05 | 0.00 | ▷ 62.08 | 4.42 | LC 9-18 |
| 86 | RC10 | | 0.000 | MIN $M_y$ | -99.37 | -0.88 | 22.05 | 0.00 | ▷ -63.12 | -2.79 | LC 1,2,9-18 |
| 86 | RC11 | | 0.000 | MAX $M_z$ | -157.55 | 7.08 | -1.44 | 0.00 | 0.74 | ▷ 31.51 | CO 55 |
| 86 | RC11 | | 0.000 | MIN $M_z$ | 279.63 | -8.74 | -6.98 | 0.00 | 20.00 | ▷ -28.07 | CO 126 |
| | **Section No. 8: HE A 300 \| Euronorm 53-62** | | | | | | | | | | |
| 346 | RC11 | | 0.271 | MAX N | ▷ 289.89 | 2.34 | -20.22 | -0.13 | -114.50 | -5.92 | CO 115 |
| 167 | RC11 | | 0.000 | MIN N | ▷ -947.86 | -4.92 | 14.10 | -0.07 | 7.20 | -15.33 | CO 34 |
| 87 | RC9 | | 0.000 | MAX $V_y$ | -67.96 | ▷ 18.55 | -0.49 | -0.01 | 5.07 | 52.06 | LC 9-18 |
| 87 | RC10 | | 0.000 | MIN $V_y$ | -113.25 | ▷ -19.77 | -2.57 | 0.01 | 5.01 | -52.98 | LC 1,2,9-18 |
| 87 | RC9 | | 0.000 | MAX $V_z$ | -38.13 | -0.23 | ▷ 40.16 | -0.01 | -157.72 | -1.07 | LC 9-18 |
| 87 | RC11 | | 3.735 | MIN $V_z$ | -66.30 | -0.67 | ▷ -49.56 | -0.01 | 9.57 | 4.29 | CO 55 |
| 87 | RC11 | | 4.980 | MAX $M_T$ | -668.98 | -9.79 | 37.93 | ▷ 0.25 | 27.86 | 29.14 | CO 58 |
| 167 | RC11 | | 2.127 | MIN $M_T$ | -58.69 | 5.01 | -23.68 | ▷ -0.22 | -103.51 | -2.99 | CO 59 |
| 87 | RC11 | | 0.000 | MAX $M_y$ | -71.26 | -0.67 | -48.90 | 0.02 | ▷ 193.85 | 1.90 | CO 55 |
| 87 | RC9 | | 0.000 | MIN $M_y$ | -36.71 | -0.60 | 40.15 | -0.01 | ▷ -157.77 | -2.12 | LC 9-18 |
| 87 | RC9 | | 0.000 | MAX $M_z$ | -67.67 | 18.55 | -0.82 | -0.01 | 6.42 | ▷ 52.06 | LC 9-18 |
| 87 | RC10 | | 0.000 | MIN $M_z$ | -113.54 | -19.77 | -2.23 | 0.01 | 3.67 | ▷ -52.98 | LC 1,2,9-18 |
| | **Section No. 9: IPE 200 \| Euronorm 19-57** | | | | | | | | | | |
| 95 | RC11 | | 2.240 | MAX N | ▷ 17.09 | 0.00 | 3.12 | 0.01 | 5.17 | 0.01 | CO 59 |
| 95 | RC11 | | 0.000 | MIN N | ▷ -19.14 | 0.03 | 20.52 | 0.01 | -33.83 | 0.03 | CO 130 |
| 177 | RC11 | | 0.000 | MAX $V_y$ | -2.02 | ▷ 4.52 | 7.85 | 0.01 | -4.92 | 1.47 | CO 14 |
| 183 | RC10 | | 0.000 | MIN $V_y$ | 0.05 | ▷ -3.49 | 16.71 | 0.00 | -10.98 | -0.21 | LC 1,2,9-18 |
| 181 | RC11 | | 0.000 | MAX $V_z$ | -4.10 | -1.01 | ▷ 39.82 | -0.01 | -25.47 | -0.32 | CO 29 |
| 53 | RC11 | | 1.580 | MIN $V_z$ | -0.52 | 0.05 | ▷ -30.43 | 0.03 | -25.31 | -0.22 | CO 30 |
| 344 | RC9 | | 0.000 | MAX $M_T$ | -1.54 | 1.51 | -5.54 | ▷ 0.05 | -0.10 | 0.79 | LC 9-18 |
| 97 | RC11 | | 0.000 | MIN $M_T$ | -5.54 | 1.37 | 16.75 | ▷ -0.08 | -33.79 | 0.34 | CO 29 |
| 53 | RC11 | | 0.000 | MAX $M_y$ | -0.51 | 0.02 | -29.95 | -0.01 | ▷ 22.40 | -0.17 | CO 30 |
| 93 | RC11 | | 0.000 | MIN $M_y$ | -0.70 | 0.02 | 37.93 | -0.03 | ▷ -63.00 | 0.00 | CO 29 |
| 177 | RC11 | | 0.000 | MAX $M_z$ | -0.34 | 4.19 | 8.55 | 0.01 | -5.38 | ▷ 2.17 | CO 4 |
| 66 | RC10 | | 0.000 | MIN $M_z$ | 0.47 | -1.97 | -3.37 | 0.01 | 8.13 | ▷ -2.30 | LC 1,2,9-18 |
| | **Section No. 10: IPE 200 \| Euronorm 19-57** | | | | | | | | | | |
| 500 | RC9 | | 0.000 | MAX N | ▷ 28.27 | -0.05 | -1.38 | 0.00 | 0.05 | -0.05 | LC 9-18 |
| 500 | RC10 | | 0.000 | MIN N | ▷ -33.71 | 0.10 | -4.36 | 0.00 | 12.68 | 0.13 | LC 1,2,9-18 |
| 51 | RC11 | | 0.000 | MAX $V_y$ | -1.24 | ▷ 3.26 | 1.36 | 0.00 | 8.12 | 1.95 | CO 114 |
| 138 | RC11 | | 3.563 | MIN $V_y$ | -1.22 | ▷ -3.13 | 1.95 | 0.01 | 10.95 | 1.95 | CO 129 |
| 220 | RC11 | | 0.000 | MAX $V_z$ | -8.97 | -0.30 | ▷ 32.89 | -0.02 | -49.13 | -0.44 | CO 42 |
| 83 | RC11 | | 3.562 | MIN $V_z$ | -3.93 | -0.10 | ▷ -32.31 | -0.04 | -39.63 | 0.16 | CO 37 |
| 217 | RC11 | | 3.563 | MAX $M_T$ | -12.86 | 0.05 | 3.94 | ▷ 0.07 | 15.36 | -0.35 | CO 33 |
| 106 | RC11 | | 3.562 | MIN $M_T$ | -1.17 | 0.17 | -16.13 | ▷ -0.09 | -26.01 | -0.24 | CO 33 |
| 110 | RC11 | | 0.356 | MAX $M_y$ | -14.24 | -0.01 | 0.19 | 0.05 | ▷ 31.52 | 0.78 | CO 33 |
| 220 | RC11 | | 0.000 | MIN $M_y$ | -8.97 | -0.30 | 32.89 | -0.02 | ▷ -49.13 | -0.44 | CO 42 |
| 138 | RC11 | | 0.000 | MAX $M_z$ | -3.03 | 3.11 | 13.40 | 0.02 | -16.52 | ▷ 2.02 | CO 50 |
| 103 | RC10 | | 3.220 | MIN $M_z$ | -1.00 | 0.94 | -3.72 | -0.01 | -1.50 | ▷ -1.46 | LC 1,2,9-18 |
| | **Section No. 11: IPE 300 \| Euronorm 19-57** | | | | | | | | | | |
| 316 | RC11 | | 0.712 | MAX N | ▷ 20.76 | -0.20 | -97.44 | 0.00 | -0.80 | 0.30 | CO 57 |
| 48 | RC10 | | 0.000 | MIN N | ▷ -24.21 | -0.12 | -63.54 | 0.00 | 27.06 | -0.05 | LC 1,2,9-18 |
| 155 | RC11 | | 0.525 | MAX $V_y$ | 6.64 | ▷ 3.78 | -84.60 | -0.02 | -103.83 | -1.65 | CO 125 |
| 42 | RC11 | | 2.375 | MIN $V_y$ | -5.64 | ▷ -3.27 | -90.14 | -0.07 | -141.23 | 2.16 | CO 51 |
| 144 | RC11 | | 0.000 | MAX $V_z$ | 1.08 | 1.99 | ▷ 101.83 | 0.01 | -165.00 | 1.37 | CO 20 |
| 155 | RC11 | | 0.525 | MIN $V_z$ | 2.88 | 3.14 | ▷ -122.36 | -0.06 | -111.38 | -1.24 | CO 41 |
| 141 | RC11 | | 0.000 | MAX $M_T$ | 17.84 | -2.44 | 82.53 | ▷ 0.09 | -103.01 | -0.57 | CO 50 |
| 155 | RC11 | | 0.525 | MIN $M_T$ | -8.30 | 0.11 | -69.68 | ▷ -0.13 | -116.33 | 0.57 | CO 35 |
| 315 | RC11 | | 0.000 | MAX $M_y$ | 10.36 | 0.01 | -11.72 | 0.04 | ▷ 108.52 | 0.09 | CO 3 |
| 316 | RC11 | | 2.375 | MIN $M_y$ | 9.35 | 0.18 | -113.44 | -0.09 | ▷ -188.85 | -0.29 | CO 7 |
| 42 | RC11 | | 2.375 | MAX $M_z$ | -5.64 | -3.27 | -90.14 | -0.07 | -141.23 | ▷ 2.16 | CO 51 |
| 316 | RC11 | | 2.375 | MIN $M_z$ | 20.00 | 3.35 | -100.30 | -0.06 | -165.13 | ▷ -2.30 | CO 57 |
| | **Section No. 12: IPE 240 \| Euronorm 19-57** | | | | | | | | | | |
| 319 | RC11 | | 1.187 | MAX N | ▷ 23.10 | -0.11 | -5.82 | 0.01 | 30.42 | 0.47 | CO 57 |
| 50 | RC10 | | 0.000 | MIN N | ▷ -23.85 | 0.50 | -27.85 | 0.00 | 8.25 | 0.19 | LC 1,2,9-18 |
| 338 | RC9 | | 0.000 | MAX $V_y$ | -2.40 | ▷ 15.85 | -3.18 | 0.04 | 1.46 | 3.14 | LC 9-18 |
| 338 | RC11 | | 0.525 | MIN $V_y$ | 3.57 | ▷ -18.36 | 30.34 | -0.01 | -19.82 | 6.31 | CO 56 |
| 338 | RC11 | | 0.000 | MAX $V_z$ | 4.79 | 5.88 | ▷ 134.84 | -0.05 | -55.98 | 0.94 | CO 42 |
| 338 | RC9 | | 0.000 | MIN $V_z$ | -16.11 | 0.60 | ▷ -84.13 | 0.00 | 12.54 | 0.11 | LC 9-18 |
| 104 | RC11 | | 1.610 | MAX $M_T$ | 9.33 | 1.50 | 1.48 | ▷ 0.15 | 23.82 | -0.38 | CO 58 |
| 202 | RC11 | | 0.516 | MIN $M_T$ | 0.12 | -3.60 | -3.81 | ▷ -0.23 | 33.32 | 0.10 | CO 54 |
| 140 | RC11 | | 2.375 | MAX $M_y$ | 0.74 | -0.03 | 53.52 | 0.04 | ▷ 81.32 | 0.05 | CO 5 |
| 3 | RC11 | | 2.375 | MIN $M_y$ | 0.22 | -0.04 | -75.92 | -0.05 | ▷ -123.28 | 0.07 | CO 7 |
| 158 | RC11 | | 0.000 | MAX $M_z$ | -2.32 | 7.49 | 47.89 | 0.08 | -48.88 | ▷ 6.45 | CO 56 |
| 338 | RC9 | | 0.525 | MIN $M_z$ | -2.43 | 15.85 | -3.35 | 0.04 | -0.28 | ▷ -5.18 | LC 9-18 |
| | **Section No. 13: RO 101.6x3 \| EN 10219-2:2006** | | | | | | | | | | |
| 287 | RC10 | | 0.000 | MAX N | ▷ 26.47 | -0.02 | 0.47 | 0.01 | 0.00 | 0.00 | LC 1,2,9-18 |
| 287 | RC9 | | 0.000 | MIN N | ▷ -26.08 | 0.00 | -0.01 | 0.00 | 0.00 | 0.00 | LC 9-18 |
| 203 | RC11 | | 0.000 | MAX $V_y$ | 6.54 | ▷ 0.06 | -0.40 | -0.05 | 1.81 | 0.19 | CO 33 |
| 287 | RC11 | | 0.000 | MIN $V_y$ | -16.68 | ▷ -0.06 | 0.76 | 0.05 | 0.00 | 0.00 | CO 41 |
| 312 | RC11 | | 0.000 | MAX $V_z$ | -3.32 | -0.05 | ▷ 0.87 | 0.03 | 0.00 | 0.00 | CO 65 |
| 207 | RC11 | | 4.602 | MIN $V_z$ | -1.29 | 0.05 | ▷ -0.84 | -0.02 | 0.00 | 0.00 | CO 65 |
| 313 | RC11 | | 4.523 | MAX $M_T$ | -6.10 | 0.00 | 0.00 | ▷ 0.12 | 1.29 | 0.01 | CO 42 |
| 306 | RC11 | | 4.602 | MIN $M_T$ | -3.35 | 0.00 | 0.00 | ▷ -0.12 | 1.19 | 0.01 | CO 33 |
| 312 | RC11 | | 4.602 | MAX $M_y$ | -3.35 | -0.04 | 0.31 | 0.04 | ▷ 2.79 | 0.21 | CO 65 |

## 4.3 CROSS-SECTIONS - INTERNAL FORCES

Result Combinations

| Member No. | RC | Node No. | Location x [m] | | Forces [kN] N | $V_y$ | $V_z$ | Moments [kNm] $M_T$ | $M_y$ | $M_z$ | Corresponding Load Cases |
|---|---|---|---|---|---|---|---|---|---|---|---|
| 312 | RC9 | | 4.602 | MIN $M_y$ | -0.06 | 0.00 | -0.04 | -0.03 | -0.16 | -0.01 | LC 9-18 |
| 312 | RC11 | | 4.602 | MAX $M_z$ | -3.10 | -0.04 | 0.31 | 0.04 | 2.74 | 0.22 | CO 41 |
| 207 | RC9 | | 0.000 | MIN $M_z$ | 1.25 | 0.00 | 0.03 | 0.03 | -0.13 | -0.01 | LC 9-18 |
| | **Section No. 14: IPE 180 \| Euronorm 19-57** | | | | | | | | | | |
| 333 | RC10 | | 0.000 | MAX N | 7.33 | 0.00 | 24.23 | 0.00 | 0.00 | 0.00 | LC 1,2,9-18 |
| 322 | RC11 | | 1.390 | MIN N | -8.46 | 0.00 | 0.00 | 0.01 | 24.45 | -0.14 | CO 57 |
| 318 | RC11 | | 3.820 | MAX $V_y$ | -0.30 | 0.46 | -54.36 | 0.00 | 0.00 | 0.00 | CO 10 |
| 317 | RC11 | | 3.820 | MIN $V_y$ | 0.06 | -0.63 | -54.34 | 0.00 | 0.00 | 0.00 | CO 7 |
| 317 | RC11 | | 0.000 | MAX $V_z$ | -0.11 | 0.39 | 54.35 | 0.00 | 0.00 | 0.00 | CO 13 |
| 318 | RC11 | | 3.820 | MIN $V_z$ | -0.42 | 0.46 | -54.36 | 0.00 | 0.00 | 0.00 | CO 13 |
| 371 | RC11 | | 0.330 | MAX $M_T$ | -2.54 | 0.00 | 0.00 | 0.03 | 1.09 | 0.00 | CO 31 |
| 370 | RC11 | | 0.660 | MIN $M_T$ | 3.15 | -0.02 | -8.36 | -0.03 | 0.00 | 0.00 | CO 9 |
| 317 | RC11 | | 1.910 | MAX $M_y$ | -1.62 | 0.00 | 0.00 | 0.02 | 51.93 | -0.49 | CO 13 |
| 371 | RC11 | | 0.660 | MIN $M_y$ | -2.66 | -0.03 | -6.58 | 0.03 | 0.00 | 0.00 | CO 31 |
| 318 | RC11 | | 1.910 | MAX $M_z$ | -1.39 | 0.00 | 0.00 | 0.00 | 51.93 | 0.37 | CO 12 |
| 317 | RC11 | | 2.292 | MIN $M_z$ | -0.96 | -0.11 | -10.87 | 0.02 | 49.84 | -0.49 | CO 3 |
| | **Section No. 15: IPE 180 \| Euronorm 19-57** | | | | | | | | | | |
| 157 | RC11 | | 1.747 | MAX N | 11.30 | -0.06 | -6.19 | 0.00 | 2.95 | 0.06 | CO 30 |
| 361 | RC11 | | 0.000 | MIN N | -10.94 | 0.01 | 0.37 | 0.00 | 3.87 | 0.06 | CO 30 |
| 362 | RC11 | | 2.375 | MAX $V_y$ | -0.44 | 2.16 | 3.51 | 0.00 | 10.67 | -0.83 | CO 114 |
| 227 | RC11 | | 0.000 | MIN $V_y$ | -0.87 | -2.14 | 0.85 | 0.00 | 3.92 | -0.85 | CO 134 |
| 137 | RC11 | | 0.000 | MAX $V_z$ | -0.47 | 0.21 | 61.77 | -0.02 | -36.42 | 0.12 | CO 30 |
| 154 | RC11 | | 0.660 | MIN $V_z$ | -1.03 | -0.59 | -23.25 | 0.04 | -13.17 | 0.13 | CO 29 |
| 154 | RC11 | | 0.000 | MAX $M_T$ | -0.15 | 0.02 | -16.38 | 0.05 | -0.03 | -0.01 | CO 25 |
| 78 | RC11 | | 0.000 | MIN $M_T$ | 0.88 | 1.07 | 27.85 | -0.03 | -9.15 | 0.34 | CO 31 |
| 199 | RC11 | | 0.000 | MAX $M_y$ | -0.77 | 0.00 | -2.10 | 0.01 | 20.51 | -0.02 | CO 5 |
| 137 | RC11 | | 0.000 | MIN $M_y$ | -0.47 | 0.21 | 61.77 | -0.02 | -36.42 | 0.12 | CO 30 |
| 156 | RC11 | | 0.000 | MAX $M_z$ | -5.75 | 1.92 | 2.83 | 0.04 | -0.04 | 0.73 | CO 56 |
| 211 | RC11 | | 2.375 | MIN $M_z$ | -0.57 | 2.12 | -12.35 | 0.00 | -17.59 | -0.89 | CO 65 |
| | **Section No. 16: QRO 80x4 \| EN 10219-2:2006** | | | | | | | | | | |
| 469 | RC11 | | 0.000 | MAX N | 2.76 | 0.00 | 0.14 | 0.00 | 0.00 | 0.00 | CO 59 |
| 469 | RC11 | | 2.240 | MIN N | -6.37 | 0.00 | -0.10 | -0.01 | 0.00 | 0.00 | CO 130 |
| 189 | RC9 | | 0.000 | MAX $V_y$ | -0.25 | 0.08 | 0.00 | -0.01 | 0.00 | 0.09 | LC 9-18 |
| 189 | RC10 | | 0.000 | MIN $V_y$ | 0.25 | -0.08 | 0.75 | 0.01 | -0.01 | -0.09 | LC 1,2,9-18 |
| 496 | RC11 | | 0.000 | MAX $V_z$ | -0.20 | -0.03 | 8.48 | -0.01 | -0.08 | -0.03 | CO 34 |
| 192 | RC11 | | 2.785 | MIN $V_z$ | 1.13 | 0.02 | -14.40 | 0.01 | -1.63 | -0.02 | CO 42 |
| 84 | RC11 | | 1.120 | MAX $M_T$ | 0.10 | 0.00 | 0.00 | 0.12 | 0.08 | 0.00 | CO 22 |
| 197 | RC11 | | 0.000 | MIN $M_T$ | -0.27 | 0.07 | 8.41 | -0.21 | -0.06 | 0.05 | CO 33 |
| 496 | RC11 | | 1.393 | MAX $M_y$ | -0.06 | -0.03 | 1.06 | -0.01 | 7.50 | 0.01 | CO 34 |
| 197 | RC11 | | 1.393 | MIN $M_y$ | 0.58 | 0.03 | -0.31 | -0.01 | -2.77 | -0.02 | CO 115 |
| 189 | RC10 | | 2.785 | MAX $M_z$ | 0.38 | -0.08 | -1.37 | 0.01 | -0.04 | 0.13 | LC 1,2,9-18 |
| 189 | RC9 | | 2.785 | MIN $M_z$ | -0.26 | 0.08 | 0.00 | -0.01 | 0.00 | -0.12 | LC 9-18 |
| | **Section No. 18: QRO 80x4 \| EN 10219-2:2006** | | | | | | | | | | |
| 498 | RC11 | | 0.270 | MAX N | 21.56 | -5.65 | -0.01 | -0.01 | 0.00 | 0.00 | CO 51 |
| 493 | RC11 | | 1.390 | MIN N | -62.96 | 0.00 | 0.00 | 0.02 | 1.24 | 1.42 | CO 41 |
| 72 | RC11 | | 0.000 | MAX $V_y$ | -7.35 | 3.21 | 1.85 | 0.10 | 0.00 | 0.00 | CO 52 |
| 506 | RC11 | | 0.000 | MIN $V_y$ | 7.45 | -5.73 | 0.21 | -0.01 | -0.06 | -1.55 | CO 136 |
| 72 | RC11 | | 0.000 | MAX $V_z$ | -7.18 | 3.20 | 1.85 | 0.10 | 0.00 | 0.00 | CO 60 |
| 212 | RC11 | | 3.562 | MIN $V_z$ | -6.85 | -3.20 | -1.85 | -0.10 | 0.00 | 0.00 | CO 60 |
| 494 | RC11 | | 1.781 | MAX $M_T$ | 0.22 | 0.00 | 0.00 | 0.14 | 1.59 | -2.76 | CO 67 |
| 222 | RC11 | | 1.781 | MIN $M_T$ | -2.76 | 0.00 | 0.00 | -0.12 | 1.19 | -2.81 | CO 116 |
| 72 | RC11 | | 1.781 | MAX $M_y$ | -7.24 | 0.00 | 0.00 | 0.11 | 1.66 | -2.88 | CO 60 |
| 497 | RC10 | | 3.040 | MIN $M_y$ | 6.87 | 0.02 | -0.06 | 0.00 | -0.18 | -0.06 | LC 1,2,9-18 |
| 493 | RC11 | | 1.390 | MAX $M_z$ | -49.79 | 0.00 | 0.00 | 0.03 | 1.17 | 2.24 | CO 65 |
| 72 | RC11 | | 1.781 | MIN $M_z$ | -7.40 | 0.00 | 0.00 | 0.11 | 1.66 | -2.88 | CO 52 |
| | **Section No. 19: QRO 80x4 \| EN 10219-2:2006** | | | | | | | | | | |
| 528 | RC9 | | 0.000 | MAX N | 17.71 | 0.00 | 0.00 | -0.21 | 0.00 | 0.00 | LC 9-18 |
| 528 | RC11 | | 0.000 | MIN N | -53.24 | 0.00 | 0.12 | 0.12 | 0.00 | 0.00 | CO 54 |
| 356 | RC11 | | 0.000 | MAX $V_y$ | -0.62 | 0.98 | 0.10 | -0.04 | 0.00 | 0.00 | CO 51 |
| 218 | RC11 | | 1.926 | MIN $V_y$ | -8.11 | -2.31 | 0.38 | -0.04 | 0.19 | 0.00 | CO 27 |
| 218 | RC10 | | 0.000 | MAX $V_z$ | -8.67 | -1.01 | 2.22 | -0.02 | -3.47 | -1.75 | LC 1,2,9-18 |
| 218 | RC9 | | 0.000 | MIN $V_z$ | 4.32 | -0.10 | -1.97 | 0.01 | 3.10 | -0.42 | LC 9-18 |
| 528 | RC9 | | 0.000 | MAX $M_T$ | -17.22 | 0.00 | 0.00 | 0.22 | 0.00 | 0.00 | LC 9-18 |
| 528 | RC10 | | 0.000 | MIN $M_T$ | -8.10 | 0.00 | 0.08 | -0.23 | 0.00 | 0.00 | LC 1,2,9-18 |
| 218 | RC10 | | 3.210 | MAX $M_y$ | -8.38 | -1.01 | 2.22 | -0.02 | 3.65 | 1.49 | LC 1,2,9-18 |
| 218 | RC10 | | 0.000 | MIN $M_y$ | -8.67 | -1.01 | 2.22 | -0.02 | -3.47 | -1.75 | LC 1,2,9-18 |
| 293 | RC11 | | 3.366 | MAX $M_z$ | -10.79 | -0.94 | -0.08 | -0.05 | -0.34 | 3.87 | CO 58 |
| 218 | RC11 | | 0.000 | MIN $M_z$ | -5.97 | -2.13 | -0.76 | -0.01 | 1.28 | -4.42 | CO 35 |
| | **Section No. 20: IPE 180 \| Euronorm 19-57** | | | | | | | | | | |
| 119 | RC10 | | 0.000 | MAX N | 5.80 | 0.00 | 24.23 | 0.00 | 0.00 | 0.00 | LC 1,2,9-18 |
| 111 | RC11 | | 1.390 | MIN N | -8.16 | 0.00 | 0.00 | 0.01 | 24.44 | 0.01 | CO 53 |
| 460 | RC11 | | 0.000 | MAX $V_y$ | -4.30 | 5.98 | 11.29 | 0.00 | 0.00 | 0.00 | CO 130 |
| 460 | RC11 | | 2.780 | MIN $V_y$ | -4.28 | -5.96 | -11.30 | 0.00 | 0.00 | 0.00 | CO 134 |
| 114 | RC11 | | 0.000 | MAX $V_z$ | -0.03 | 0.01 | 54.35 | 0.00 | 0.00 | 0.00 | CO 14 |
| 114 | RC11 | | 3.820 | MIN $V_z$ | -0.07 | 0.02 | -54.35 | 0.00 | 0.00 | 0.00 | CO 14 |
| 107 | RC11 | | 0.764 | MAX $M_T$ | -0.48 | 2.11 | 15.63 | 0.25 | 15.92 | -2.15 | CO 55 |
| 107 | RC11 | | 3.056 | MIN $M_T$ | -1.52 | -2.08 | -15.65 | -0.26 | 15.94 | -2.12 | CO 50 |
| 114 | RC11 | | 1.910 | MAX $M_y$ | -1.38 | 0.00 | 0.00 | -0.01 | 51.93 | 0.01 | CO 14 |
| 107 | RC11 | | 3.820 | MIN $M_y$ | -1.48 | -3.42 | -26.08 | -0.01 | 0.00 | 0.00 | CO 58 |
| 107 | RC11 | | 2.292 | MAX $M_z$ | -0.76 | 0.06 | -5.82 | 0.01 | 26.67 | 0.29 | CO 5 |
| 460 | RC11 | | 1.390 | MIN $M_z$ | -4.43 | 0.00 | 0.00 | 0.00 | 7.85 | -4.16 | CO 134 |
| | **Section No. 21: HE B 260 \| Euronorm 53-62** | | | | | | | | | | |
| 347 | RC11 | | 0.271 | MAX N | 310.16 | 5.51 | -12.78 | -0.07 | -83.74 | -6.15 | CO 115 |
| 68 | RC11 | | 0.000 | MIN N | -1098.77 | 0.53 | 9.20 | -0.01 | -71.92 | 6.25 | CO 33 |
| 347 | RC10 | | 0.000 | MAX $V_y$ | -130.06 | 12.47 | -9.48 | -0.02 | -32.03 | -12.60 | LC 1,2,9-18 |
| 166 | RC11 | | 1.824 | MIN $V_y$ | -984.27 | -15.85 | 5.02 | 0.00 | 11.57 | -0.15 | CO 34 |
| 63 | RC11 | | 4.472 | MAX $V_z$ | -823.44 | -3.65 | 26.19 | 0.12 | -4.34 | 15.04 | CO 57 |

## 4.3 CROSS-SECTIONS - INTERNAL FORCES

Result Combinations

| Member No. | RC | Node No. | Location x [m] | | Forces [kN] N | $V_y$ | $V_z$ | Moments [kNm] $M_T$ | $M_y$ | $M_z$ | Corresponding Load Cases |
|---|---|---|---|---|---|---|---|---|---|---|---|
| 345 | RC11 | | 0.270 | MIN $V_z$ | -979.38 | -13.28 | -57.09 | 0.09 | 1.93 | 22.37 | CO 34 |
| 63 | RC11 | | 5.590 | MAX $M_T$ | -822.06 | -2.22 | 25.88 | 0.24 | 24.88 | 18.34 | CO 57 |
| 64 | RC11 | | 0.000 | MIN $M_T$ | -622.85 | 0.18 | 18.07 | -0.21 | -52.76 | 0.41 | CO 33 |
| 81 | RC11 | | 0.000 | MAX $M_y$ | 144.83 | 0.34 | -27.92 | -0.01 | 121.35 | 2.12 | CO 51 |
| 63 | RC10 | | 0.000 | MIN $M_y$ | -247.83 | -2.84 | 25.93 | -0.03 | -110.41 | -3.64 | LC 1,2,9-18 |
| 68 | RC10 | | 0.000 | MAX $M_z$ | -238.50 | 10.45 | -0.20 | 0.00 | -1.38 | 34.09 | LC 1,2,9-18 |
| 63 | RC10 | | 0.000 | MIN $M_z$ | -192.54 | -12.13 | -1.16 | 0.00 | 4.17 | -35.86 | LC 1,2,9-18 |
| | **Section No. 22: HE A 200 \| Euronorm 53-62** | | | | | | | | | | |
| 122 | RC9 | | 0.000 | MAX N | 83.72 | -0.48 | 11.80 | 0.00 | -31.79 | -2.36 | LC 9-18 |
| 125 | RC11 | | 0.000 | MIN N | -307.55 | 1.34 | 5.72 | 0.00 | -22.30 | 3.48 | CO 9 |
| 527 | RC11 | | 1.080 | MAX $V_y$ | -41.17 | 29.92 | 1.24 | 0.00 | 8.51 | 0.57 | CO 54 |
| 173 | RC11 | | 2.195 | MIN $V_y$ | -72.82 | -15.28 | 1.45 | -0.04 | 4.24 | -0.18 | CO 58 |
| 122 | RC10 | | 0.000 | MAX $V_z$ | -10.50 | -0.21 | 15.15 | 0.00 | -37.79 | -1.02 | LC 1,2,9-18 |
| 133 | RC11 | | 2.795 | MIN $V_z$ | -80.09 | 0.41 | -22.66 | 0.00 | -1.16 | -0.57 | CO 55 |
| 527 | RC11 | | 1.200 | MAX $M_T$ | -56.88 | 19.75 | 6.90 | 0.48 | 24.39 | -1.56 | CO 31 |
| 123 | RC11 | | 5.590 | MIN $M_T$ | -105.29 | -5.86 | -6.26 | -0.26 | -7.47 | 24.82 | CO 52 |
| 133 | RC11 | | 0.000 | MAX $M_y$ | -81.93 | 0.40 | -21.78 | 0.00 | 61.36 | 0.56 | CO 55 |
| 133 | RC11 | | 5.590 | MIN $M_y$ | -78.76 | 0.33 | -21.71 | 0.07 | -63.59 | -1.62 | CO 55 |
| 131 | RC11 | | 5.590 | MAX $M_z$ | -191.23 | -7.69 | 1.65 | 0.02 | 10.25 | 36.33 | CO 30 |
| 173 | RC11 | | 0.000 | MIN $M_z$ | -74.27 | -14.33 | 1.48 | 0.01 | 1.05 | -33.01 | CO 58 |
| | **Section No. 23: HE A 200 \| Euronorm 53-62** | | | | | | | | | | |
| 56 | RC11 | | 8.900 | MAX N | 369.81 | 0.89 | 1.50 | -0.04 | 6.65 | -2.41 | CO 42 |
| 56 | RC11 | | 0.000 | MIN N | -39.88 | -0.13 | -0.58 | 0.00 | 0.00 | 0.00 | CO 119 |
| 60 | RC11 | | 8.900 | MAX $V_y$ | 347.79 | 1.01 | -0.18 | 0.00 | -0.79 | -2.83 | CO 42 |
| 54 | RC11 | | 8.900 | MIN $V_y$ | 305.13 | -0.41 | -0.49 | -0.01 | -2.34 | 1.23 | CO 27 |
| 56 | RC11 | | 8.900 | MAX $V_z$ | 369.81 | 0.89 | 1.50 | -0.04 | 6.65 | -2.41 | CO 42 |
| 54 | RC9 | | 0.000 | MIN $V_z$ | -34.41 | -0.08 | -1.30 | 0.00 | 0.00 | 0.00 | LC 9-18 |
| 60 | RC11 | | 8.900 | MAX $M_T$ | 241.84 | 0.35 | -0.49 | 0.01 | -2.53 | -1.17 | CO 112 |
| 56 | RC11 | | 8.900 | MIN $M_T$ | 276.81 | 0.71 | 1.41 | -0.04 | 6.99 | -2.23 | CO 66 |
| 54 | RC10 | | 8.900 | MAX $M_y$ | 83.03 | 0.07 | 1.31 | 0.00 | 11.67 | -0.60 | LC 1,2,9-18 |
| 54 | RC9 | | 8.900 | MIN $M_y$ | -34.41 | -0.08 | -1.30 | 0.00 | -11.53 | 0.72 | LC 9-18 |
| 60 | RC10 | | 8.900 | MAX $M_z$ | 47.55 | -0.28 | 0.00 | 0.00 | 0.03 | 2.50 | LC 1,2,9-18 |
| 60 | RC11 | | 8.900 | MIN $M_z$ | 347.79 | 1.01 | -0.18 | 0.00 | -0.79 | -2.83 | CO 42 |
| | **Section No. 24: RO 101.6x3 \| EN 10219-2:2006** | | | | | | | | | | |
| 511 | RC10 | | 5.559 | MAX N | 27.23 | 0.00 | -0.20 | 0.04 | 0.00 | 0.00 | LC 1,2,9-18 |
| 512 | RC10 | | 0.000 | MIN N | -27.28 | 0.00 | 0.20 | 0.01 | 0.00 | 0.00 | LC 1,2,9-18 |
| 508 | RC11 | | 4.522 | MAX $V_y$ | -5.77 | 0.00 | -0.23 | -0.98 | 0.00 | 0.00 | CO 42 |
| 507 | RC11 | | 4.522 | MIN $V_y$ | -8.86 | 0.00 | -0.24 | 0.91 | 0.00 | 0.00 | CO 41 |
| 509 | RC11 | | 0.000 | MAX $V_z$ | -19.82 | 0.00 | 0.35 | 0.02 | 0.00 | 0.00 | CO 57 |
| 509 | RC11 | | 5.559 | MIN $V_z$ | -19.80 | 0.00 | -0.35 | 0.02 | 0.00 | 0.00 | CO 57 |
| 507 | RC11 | | 4.522 | MAX $M_T$ | 8.03 | 0.00 | -0.21 | 0.97 | 0.00 | 0.00 | CO 42 |
| 508 | RC11 | | 4.522 | MIN $M_T$ | 11.12 | 0.00 | -0.21 | -1.04 | 0.00 | 0.00 | CO 41 |
| 516 | RC11 | | 3.372 | MAX $M_y$ | -1.57 | 0.00 | 0.00 | 0.16 | 0.58 | 0.00 | CO 42 |
| 507 | RC11 | | 4.522 | MIN $M_y$ | -8.86 | 0.00 | -0.24 | 0.91 | 0.00 | 0.00 | CO 41 |
| 508 | RC11 | | 2.713 | MAX $M_z$ | -5.84 | 0.00 | -0.05 | -0.97 | 0.25 | 0.01 | CO 34 |
| 507 | RC11 | | 2.713 | MIN $M_z$ | -8.88 | 0.00 | -0.05 | 0.88 | 0.26 | -0.01 | CO 33 |
| | **Section No. 25: RO 76.1x3 \| EN 10219-2:2006** | | | | | | | | | | |
| 483 | RC10 | | 0.000 | MAX N | 16.46 | 0.00 | 0.11 | 0.00 | 0.00 | 0.00 | LC 1,2,9-18 |
| 522 | RC11 | | 4.522 | MIN N | -18.66 | 0.00 | -0.25 | -0.19 | 0.00 | 0.00 | CO 52 |
| 518 | RC11 | | 0.000 | MAX $V_y$ | -6.50 | 0.01 | 0.19 | -0.55 | 0.00 | 0.00 | CO 41 |
| 517 | RC11 | | 4.522 | MIN $V_y$ | -7.26 | -0.01 | -0.19 | 0.51 | 0.00 | 0.00 | CO 42 |
| 522 | RC11 | | 0.000 | MAX $V_z$ | -18.65 | 0.00 | 0.25 | -0.19 | 0.00 | 0.00 | CO 52 |
| 522 | RC11 | | 4.522 | MIN $V_z$ | -18.66 | 0.00 | -0.25 | -0.19 | 0.00 | 0.00 | CO 52 |
| 517 | RC11 | | 4.522 | MAX $M_T$ | -7.26 | -0.01 | -0.19 | 0.51 | 0.00 | 0.00 | CO 42 |
| 518 | RC11 | | 0.000 | MIN $M_T$ | -6.50 | 0.01 | 0.19 | -0.55 | 0.00 | 0.00 | CO 41 |
| 522 | RC11 | | 2.261 | MAX $M_y$ | -18.66 | 0.00 | 0.00 | -0.19 | 0.31 | 0.00 | CO 52 |
| 517 | RC11 | | 4.522 | MIN $M_y$ | 8.82 | 0.00 | -0.14 | 0.49 | 0.00 | 0.00 | CO 41 |
| 519 | RC11 | | 2.713 | MAX $M_z$ | -11.19 | 0.00 | -0.05 | -0.46 | 0.24 | 0.00 | CO 33 |
| 518 | RC11 | | 1.809 | MIN $M_z$ | -6.63 | 0.00 | 0.04 | -0.55 | 0.21 | 0.00 | CO 33 |
| | **Section No. 26: QRO 120x5 \| EN 10219-2:2006** | | | | | | | | | | |
| 233 | RC11 | | 3.140 | MAX N | 9.43 | -2.71 | -0.96 | 0.14 | -2.93 | 8.26 | CO 126 |
| 233 | RC11 | | 0.000 | MIN N | -9.39 | 1.20 | -0.45 | -0.27 | 0.00 | 0.00 | CO 63 |
| 282 | RC11 | | 0.000 | MAX $V_y$ | 1.59 | 2.47 | -6.11 | 0.25 | 3.76 | 1.52 | CO 115 |
| 282 | RC11 | | 0.000 | MIN $V_y$ | 3.11 | -8.25 | -13.37 | -0.78 | 8.22 | -5.07 | CO 34 |
| 282 | RC9 | | 0.000 | MAX $V_z$ | -1.18 | 0.12 | 2.91 | -0.06 | -1.79 | 0.07 | LC 9-18 |
| 282 | RC11 | | 0.615 | MIN $V_z$ | 1.66 | -6.95 | -15.70 | -0.68 | 0.00 | 0.00 | CO 10 |
| 282 | RC9 | | 0.000 | MAX $M_T$ | 0.18 | 0.19 | -0.52 | 0.31 | 0.32 | 0.12 | LC 9-18 |
| 282 | RC11 | | 0.000 | MIN $M_T$ | 2.45 | -8.21 | -14.13 | -0.79 | 8.69 | -5.05 | CO 58 |
| 282 | RC11 | | 0.000 | MAX $M_y$ | 1.46 | -6.97 | -15.70 | -0.67 | 9.65 | -4.28 | CO 10 |
| 233 | RC11 | | 3.140 | MIN $M_y$ | 7.74 | -2.37 | -1.15 | 0.06 | -3.52 | 7.26 | CO 14 |
| 233 | RC11 | | 3.140 | MAX $M_z$ | 9.42 | -2.91 | -1.12 | 0.13 | -3.41 | 8.87 | CO 58 |
| 233 | RC9 | | 3.140 | MIN $M_z$ | -6.23 | 1.84 | 0.02 | -0.21 | 0.05 | -5.76 | LC 9-18 |
| | **Section No. 27: IF HE A 240-20 \| ArcelorMittal (EN 10365:2017)** | | | | | | | | | | |
| 342 | RC11 | | 0.615 | MAX N | 411.75 | -541.78 | 8.19 | -0.39 | -10.07 | 46.05 | CO 42 |
| 342 | RC11 | | 0.000 | MIN N | -145.77 | 167.57 | -9.54 | 0.25 | -1.94 | 104.66 | CO 119 |
| 342 | RC11 | | 0.615 | MAX $V_y$ | -144.83 | 168.08 | -9.52 | 0.12 | -7.80 | 1.38 | CO 119 |
| 342 | RC11 | | 0.000 | MIN $V_y$ | 409.58 | -542.48 | 8.34 | -0.62 | -15.16 | -287.30 | CO 42 |
| 342 | RC11 | | 0.000 | MAX $V_z$ | 326.53 | -474.05 | 10.35 | -0.52 | -13.13 | -229.50 | CO 38 |
| 342 | RC11 | | 0.000 | MIN $V_z$ | -145.77 | 167.57 | -9.54 | 0.25 | -1.94 | 104.66 | CO 119 |
| 342 | RC9 | | 0.000 | MAX $M_T$ | -1.87 | 5.27 | 3.64 | 0.32 | -9.05 | 3.89 | LC 9-18 |
| 342 | RC11 | | 0.000 | MIN $M_T$ | 404.24 | -535.43 | 0.29 | -1.37 | -4.87 | -281.88 | CO 33 |
| 342 | RC9 | | 0.000 | MAX $M_y$ | -2.27 | 3.63 | -5.32 | -0.24 | 12.17 | 2.22 | LC 9-18 |
| 342 | RC11 | | 0.000 | MIN $M_y$ | 299.17 | -418.66 | 8.57 | -0.68 | -18.13 | -214.72 | CO 58 |
| 342 | RC11 | | 0.000 | MAX $M_z$ | -145.77 | 167.57 | -9.54 | 0.25 | -1.94 | 104.66 | CO 119 |
| 342 | RC11 | | 0.000 | MIN $M_z$ | 409.58 | -542.48 | 8.34 | -0.62 | -15.16 | -287.30 | CO 42 |

# POMIKI STEBROV KONSRUKCIJE PRI POTRESNI KOMBINACIJI

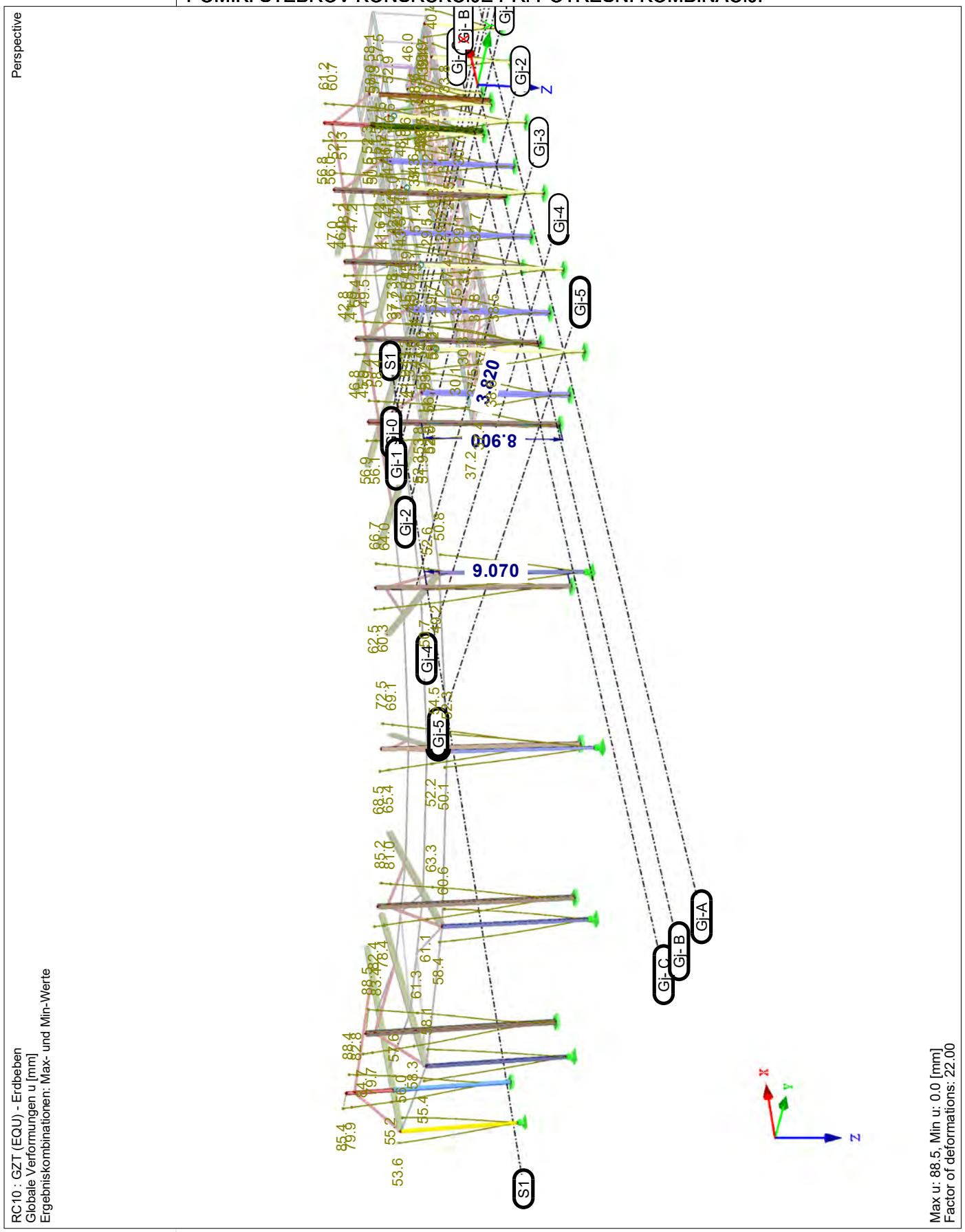

# POMIKI STEBROV KONSTRUKCIJE PRI MSU - KARAKTERISTICNA KOMBINACIJA

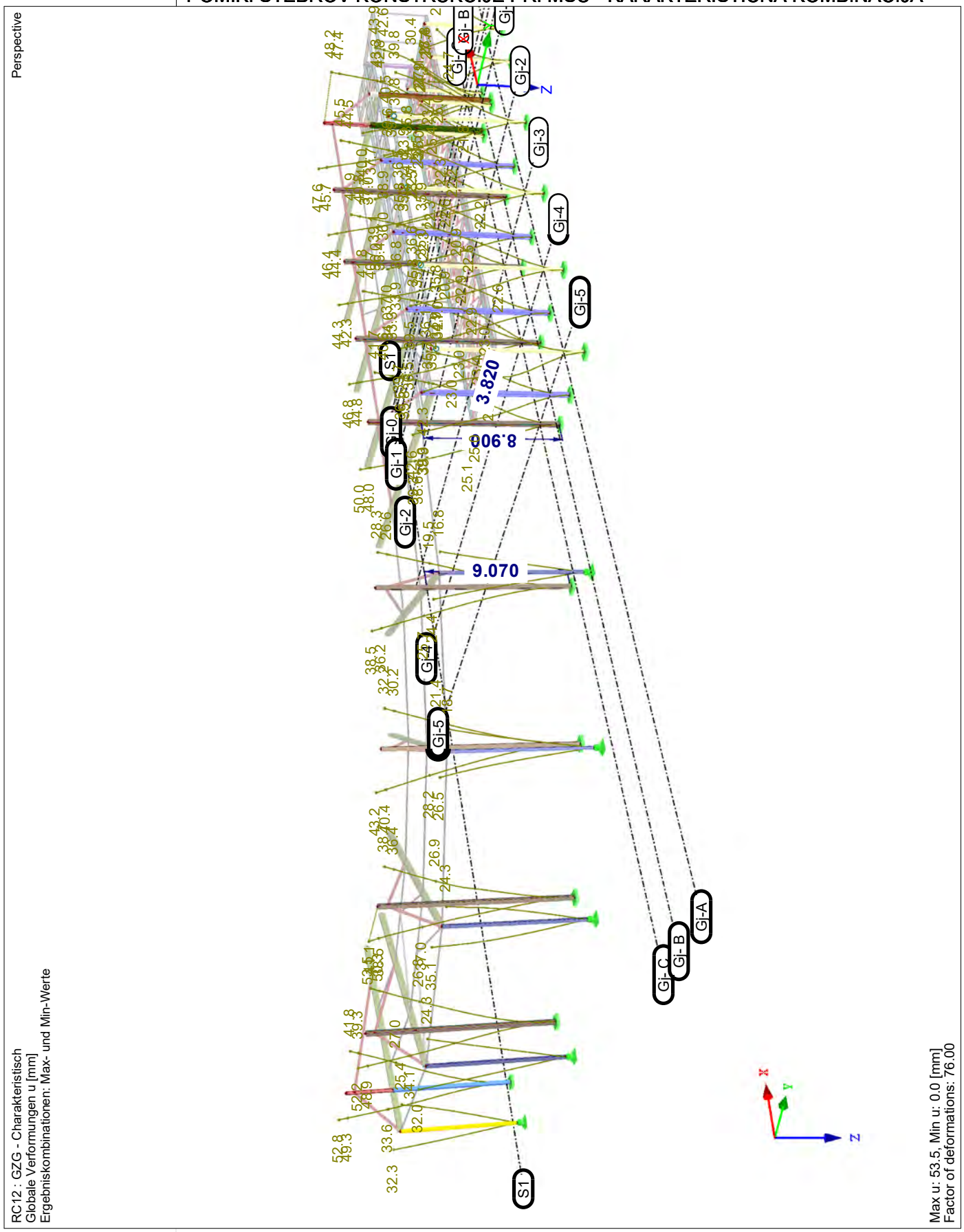

# POMIKI GLAVNIH NOSILCEV NADSTREŠNICE UZ PRI MSU - KARAKT. KOMBINACIJA

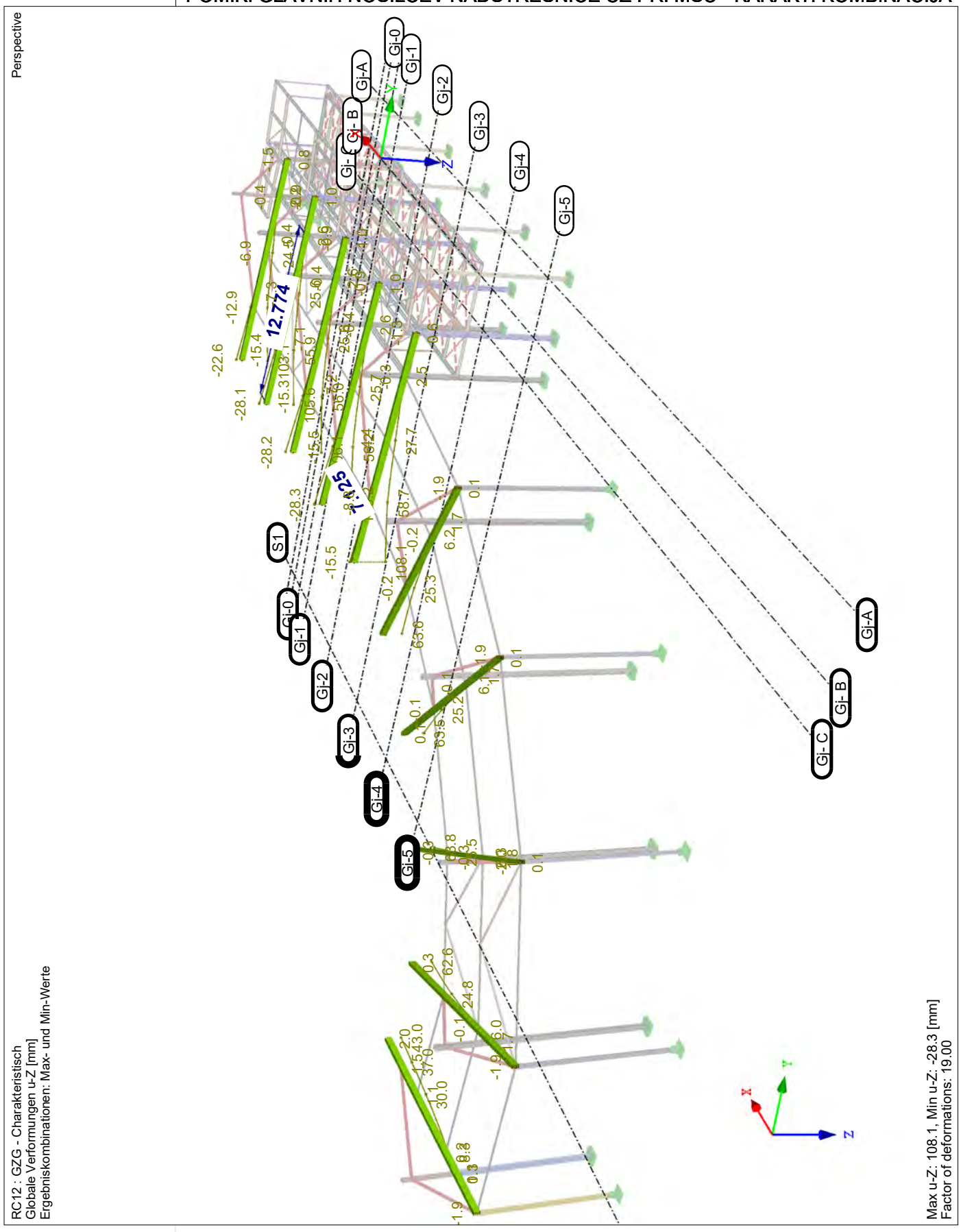

# POMIKI GLAVNIH STREŠNIH NOSILCEV UZ NADSTREŠNICE PRI POTRESNI KOMBINACIJI

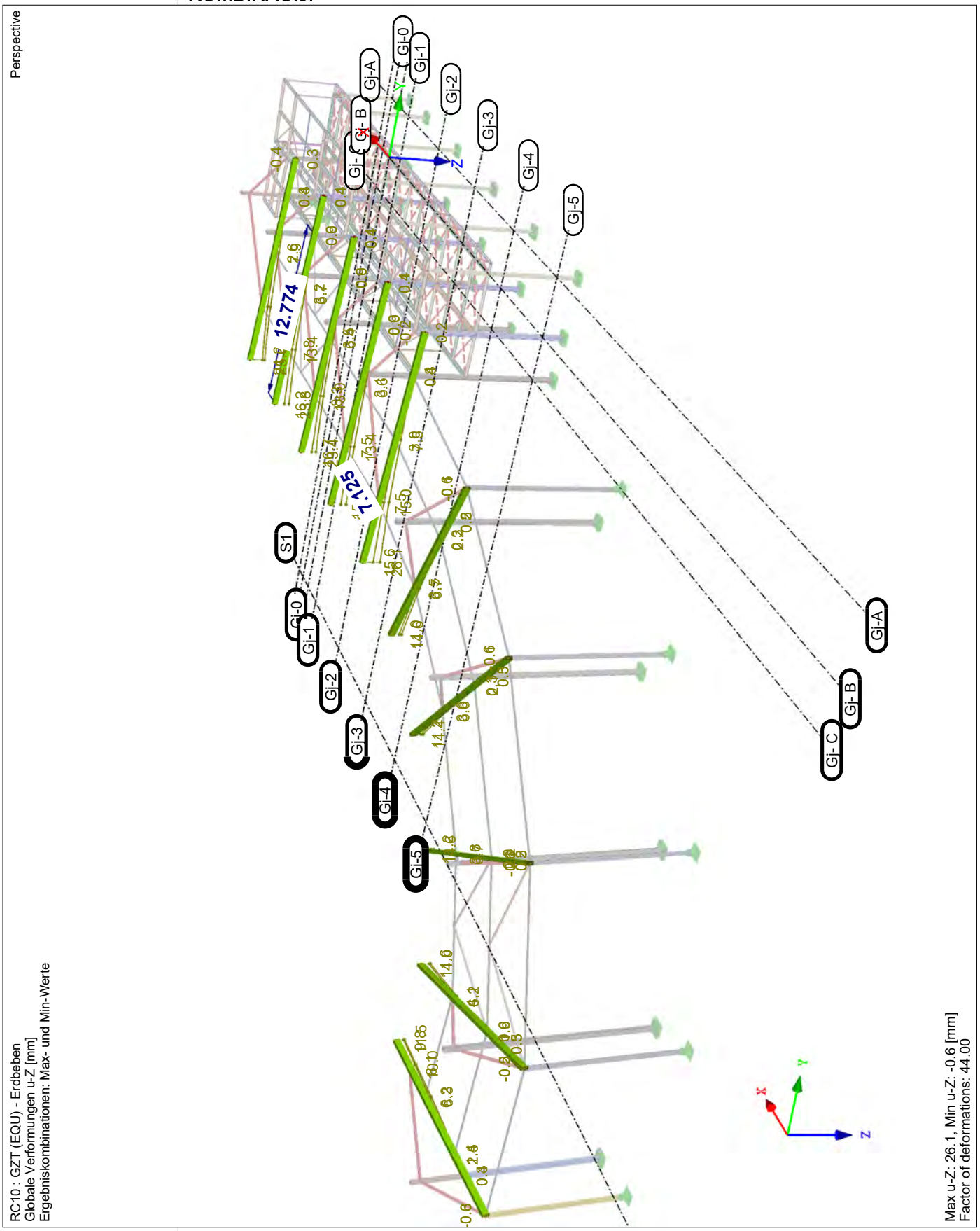

# VERTIKALNI POMIKI STREŠNIH IN ETAŽNIH NOSILCEV OBJEKTA

RC12 : GZG - Charakteristisch
Globale Verformungen u-Z [mm]
Ergebniskombinationen: Max- und Min-Werte

Perspective

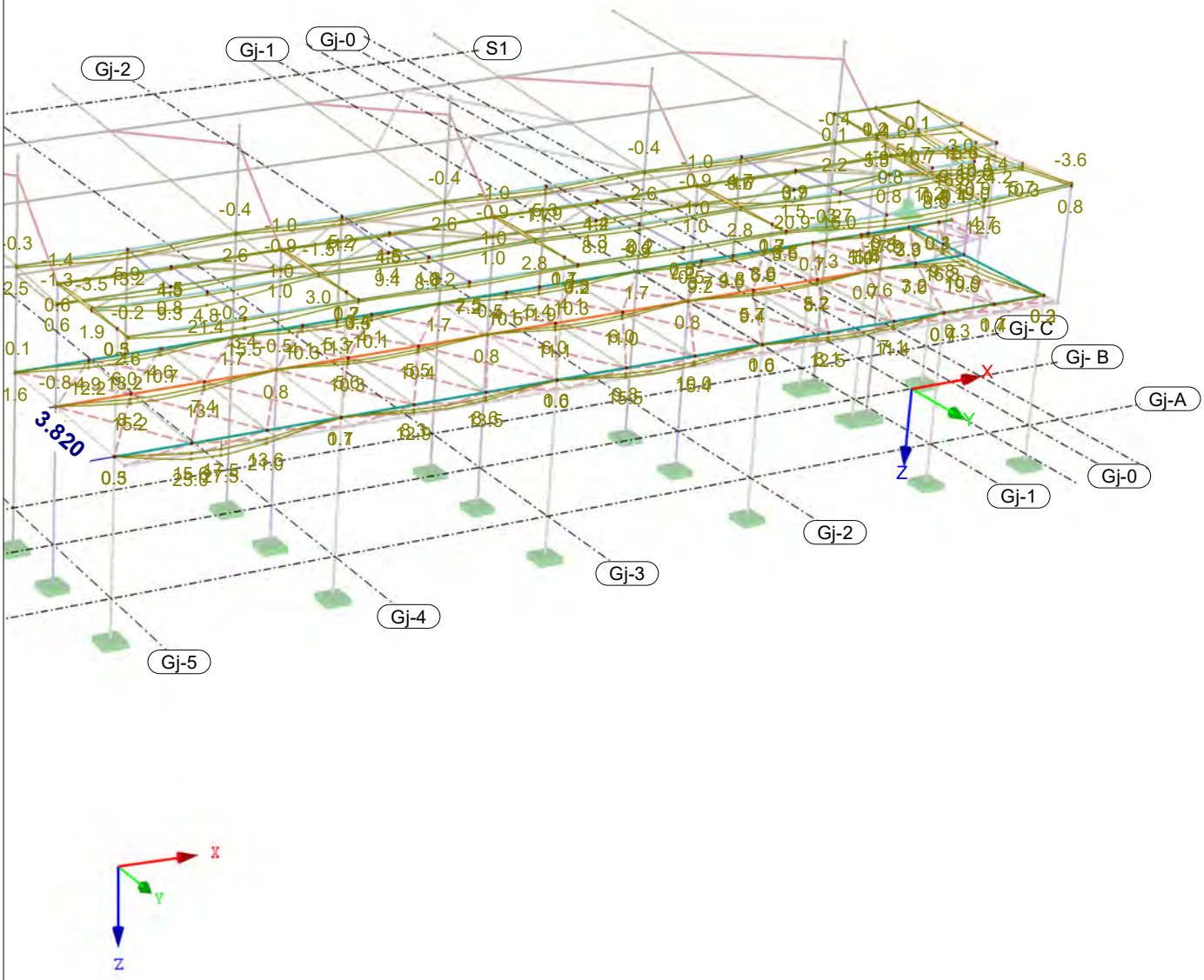


Max u-Z: 27.5, Min u-Z: -4.4 [mm]
Factor of deformations: 19.00

# SEKUNDARNI FASADNI STEBRI - POMIKI PRI MSU

RC12 : GZG - Charakteristisch
Globale Verformungen u [mm]
Ergebniskombinationen: Max- und Min-Werte

Perspective

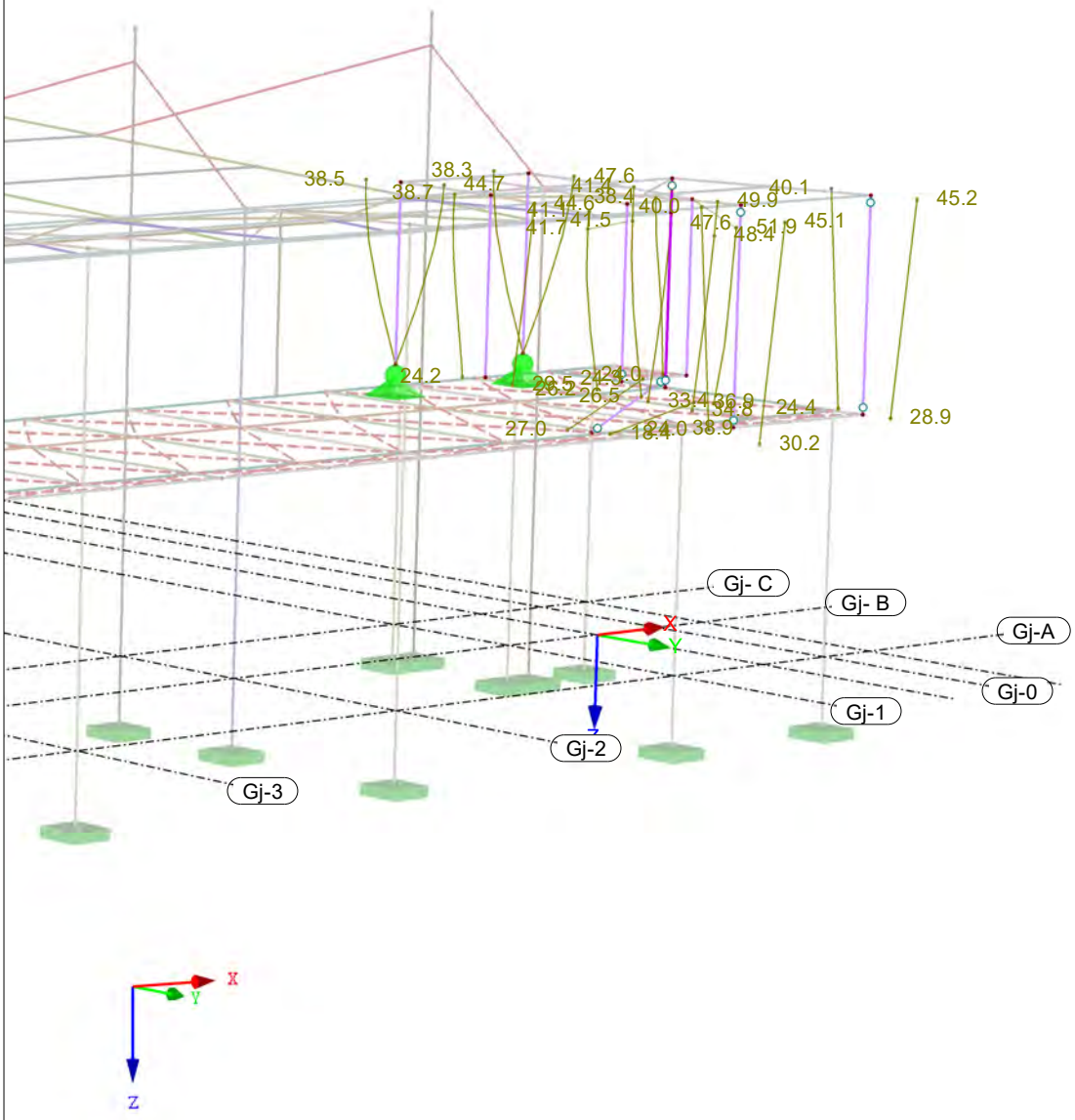


Max u: 51.9, Min u: 0.0 [mm]
Factor of deformations: 19.00

# SEKUNDARNI IN FASADNI STEBRI - POMIKI PRI POTRESNI KOMBINACIJI

RC10 : GZT (EQU) - Erdbeben
Globale Verformungen u [mm]
Ergebniskombinationen: Max- und Min-Werte

Perspective

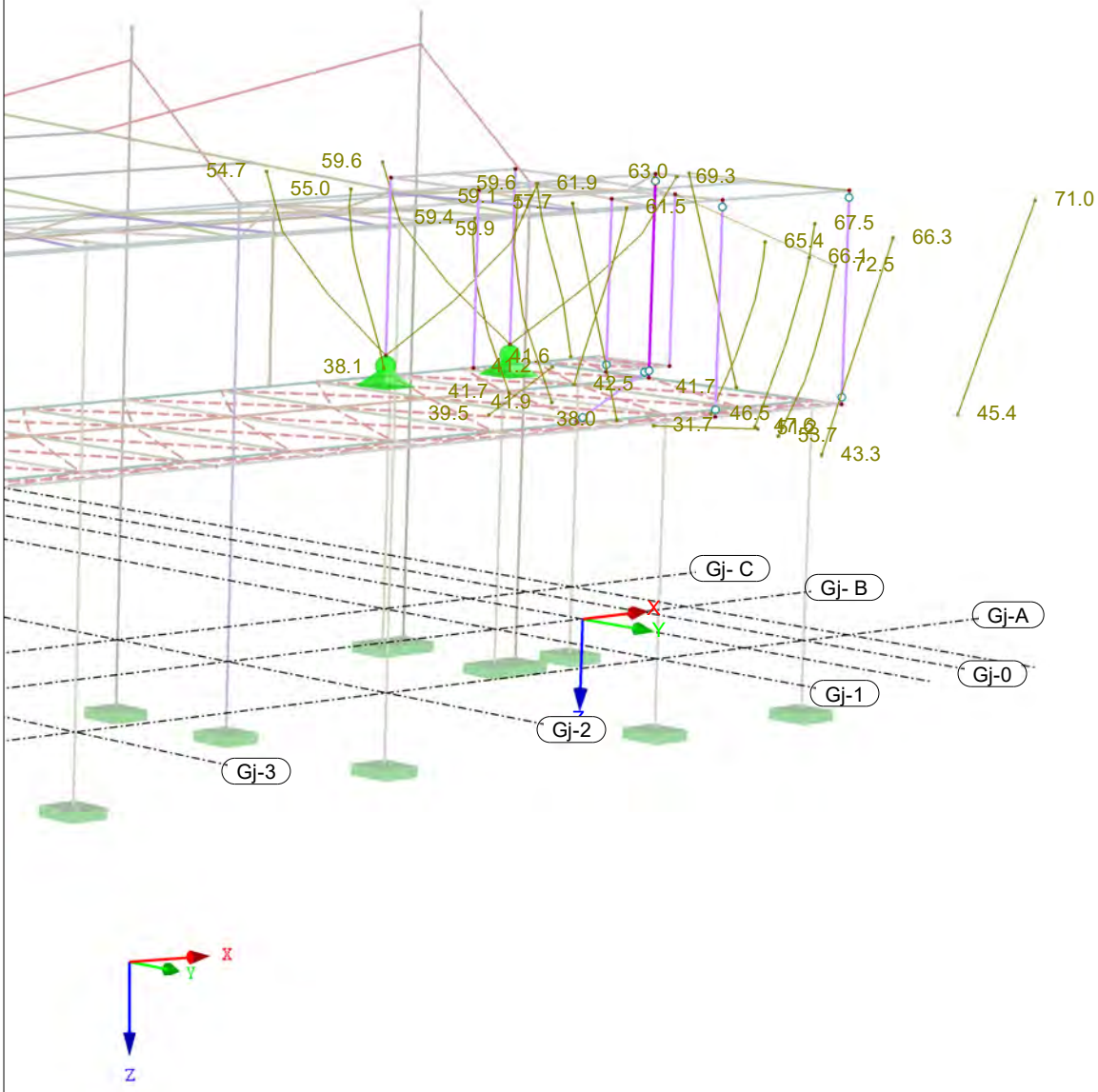


Max u: 72.5, Min u: 0.0 [mm]
Factor of deformations: 44.00

**STEEL EC3**
CA1
Bemessung nach Eurocode 3

## 1.1 GENERAL DATA

| | | |
|---|---|---|
| Members to design: | All | |
| Sets of members to design: | | |
| National Annex: | SIST | |
| Ultimate Limit State Design<br>Result combinations to design: | RC11 | GZT (STR/GEO) - Ständig / vorübergehend - Gl. 6.10 |

## 1.2 MATERIALS

| Matl. No. | Material Description | E- Modulus E [kN/cm²] | Shear Modulus G [kN/cm²] | Poisson's Ratio ν [-] | Yield Stress $f_{yk}$ [kN/cm²] | Max. Thickness t [mm] |
|---|---|---|---|---|---|---|
| 1 | Baustahl S 235 \| EN 1993-1-1:2005-05 | 21000.00 | 8076.92 | 0.300 | 23.50 | 40.0 |
| | | | | | 21.50 | 80.0 |
| | | | | | 21.50 | 100.0 |
| | | | | | 19.50 | 150.0 |
| | | | | | 18.50 | 200.0 |
| | | | | | 17.50 | 250.0 |
| | | | | | 16.50 | 400.0 |
| 2 | Baustahl S 355 \| EN 1993-1-1:2005-05 | 21000.00 | 8076.92 | 0.300 | 35.50 | 40.0 |
| | | | | | 33.50 | 80.0 |
| | | | | | 31.50 | 100.0 |
| | | | | | 29.50 | 150.0 |
| | | | | | 28.50 | 200.0 |
| | | | | | 27.50 | 250.0 |

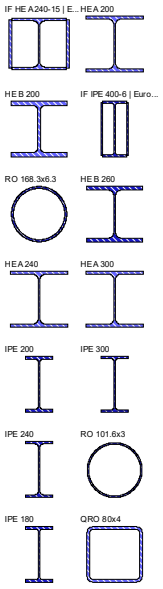


## 1.3 CROSS-SECTIONS

| Sect. No. | Matl. No. | Cross-Section Description | Cross-Section Type | Max Design Ratio | Comment |
|---|---|---|---|---|---|
| 1 | 1 | IF HE A 240-15 \| Euronorm 53-62 | General | 0.74 | |
| | Type General - Only Class 3 and Class 4 possible | | | | |
| 2 | 1 | HE A 200 \| Euronorm 53-62 | I-section rolled | 0.31 | |
| 3 | 1 | HE B 200 \| Euronorm 53-62 | I-section rolled | 0.57 | |
| 4 | 2 | IF IPE 400-6 \| Euronorm 19-57 | General | 0.84 | |
| | Type General - Only Class 3 and Class 4 possible | | | | |
| 5 | 2 | RO 168.3x6.3 \| EN 10219-2:2006 | Pipe | 0.95 | |
| 6 | 2 | HE B 260 \| Euronorm 53-62 | I-section rolled | 0.73 | |
| 7 | 1 | HE A 240 \| Euronorm 53-62 | I-section rolled | 0.52 | |
| 8 | 1 | HE A 300 \| Euronorm 53-62 | I-section rolled | 0.88 | |
| 9 | 2 | IPE 200 \| Euronorm 19-57 | I-section rolled | 0.81 | |
| 10 | 2 | IPE 200 \| Euronorm 19-57 | I-section rolled | 0.82 | |
| 11 | 2 | IPE 300 \| Euronorm 19-57 | I-section rolled | 0.87 | |
| 12 | 2 | IPE 240 \| Euronorm 19-57 | I-section rolled | 0.95 | |
| 13 | 2 | RO 101.6x3 \| EN 10219-2:2006 | Pipe | 0.52 | |
| 14 | 2 | IPE 180 \| Euronorm 19-57 | I-section rolled | 2.23 | |
| 15 | 2 | IPE 180 \| Euronorm 19-57 | I-section rolled | 0.62 | |
| 16 | 1 | QRO 80x4 \| EN 10219-2:2006 | Box rolled | 0.96 | |
| 18 | 1 | QRO 80x4 \| EN 10219-2:2006 | Box rolled | 0.77 | |
| 19 | 1 | QRO 80x4 \| EN 10219-2:2006 | Box rolled | 0.47 | |
| 20 | 2 | IPE 180 \| Euronorm 19-57 | I-section rolled | 2.19 | |
| 21 | 2 | HE B 260 \| Euronorm 53-62 | I-section rolled | 0.88 | |
| 22 | 2 | HE A 200 \| Euronorm 53-62 | I-section rolled | 0.74 | |
| 23 | 2 | HE A 200 \| Euronorm 53-62 | I-section rolled | 0.20 | |
| 24 | 2 | RO 101.6x3 \| EN 10219-2:2006 | Pipe | 0.39 | |
| 25 | 1 | RO 76.1x3 \| EN 10219-2:2006 | Pipe | 0.63 | |
| 26 | 1 | QRO 120x5 \| EN 10219-2:2006 | Box rolled | 0.32 | |
| 27 | 2 | IF HE 240 A-20 \| ArcelorMittal (EN 10365:2017) | General | 0.76 | |
| | Type General - Only Class 3 and Class 4 possible | | | | |

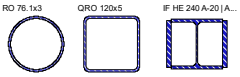


## 1.5 EFFECTIVE LENGTHS - MEMBERS

| Member No. | Buckling Possible | Buckling About Axis y | | | Buckling About Axis z | | | Lateral-Torsional Buckling | | | | |
|---|---|---|---|---|---|---|---|---|---|---|---|---|
| | | Possible | $k_{cr,y}$ | $L_{cr,y}$ [m] | Possible | $k_{cr,z}$ | $L_{cr,z}$ [m] | Possible | $k_z$ | $k_w$ | $L_w$ [m] | $L_T$ [m] |
| 1 | ☒ | ☒ | 1.00 | 7.890 | ☒ | 1.00 | 7.890 | ☒ | 1.0 | 1.0 | 7.890 | 7.890 |
| 2 | ☒ | ☒ | 1.00 | 0.580 | ☒ | 1.00 | 0.580 | ☒ | 1.0 | 1.0 | 0.580 | 0.580 |
| 3 | ☒ | ☒ | 1.00 | 2.375 | ☒ | 1.00 | 2.375 | ☒ | 1.0 | 1.0 | 2.375 | 2.375 |
| 4 | ☒ | ☒ | 1.00 | 2.617 | ☒ | 1.00 | 2.617 | ☒ | 1.0 | 1.0 | 2.617 | 2.617 |
| 5 | ☒ | ☒ | 1.00 | 3.940 | ☒ | 1.00 | 3.940 | ☐ | 1.0 | 1.0 | 3.940 | 3.940 |
| 6 | ☒ | ☒ | 1.00 | 0.580 | ☒ | 1.00 | 0.580 | ☒ | 1.0 | 1.0 | 0.580 | 0.580 |
| 7 | ☒ | ☒ | 1.00 | 2.791 | ☒ | 1.00 | 2.791 | ☐ | 1.0 | 1.0 | 2.791 | 2.791 |
| 8 | ☒ | ☒ | 1.00 | 1.502 | ☒ | 1.00 | 1.502 | ☐ | 1.0 | 1.0 | 1.502 | 1.502 |
| 9 | ☒ | ☒ | 1.00 | 2.770 | ☒ | 1.00 | 2.770 | ☒ | 1.0 | 1.0 | 2.770 | 2.770 |
| 10 | ☒ | ☒ | 1.00 | 0.563 | ☒ | 1.00 | 0.563 | ☒ | 1.0 | 1.0 | 0.563 | 0.563 |
| 11 | ☒ | ☒ | 1.00 | 0.580 | ☒ | 1.00 | 0.580 | ☒ | 1.0 | 1.0 | 0.580 | 0.580 |
| 14 | ☒ | ☒ | 1.00 | 2.600 | ☒ | 1.00 | 2.600 | ☒ | 1.0 | 1.0 | 2.600 | 2.600 |
| 15 | ☒ | ☒ | 1.00 | 2.600 | ☒ | 1.00 | 2.600 | ☒ | 1.0 | 1.0 | 2.600 | 2.600 |
| 16 | ☒ | ☒ | 1.00 | 4.239 | ☒ | 1.00 | 4.239 | ☐ | 1.0 | 1.0 | 4.239 | 4.239 |
| 17 | ☒ | ☒ | 1.00 | 2.600 | ☒ | 1.00 | 2.600 | ☒ | 1.0 | 1.0 | 2.600 | 2.600 |
| 18 | ☒ | ☒ | 1.00 | 4.239 | ☒ | 1.00 | 4.239 | ☐ | 1.0 | 1.0 | 4.239 | 4.239 |
| 19 | ☒ | ☒ | 1.00 | 2.600 | ☒ | 1.00 | 2.600 | ☒ | 1.0 | 1.0 | 2.600 | 2.600 |

## 1.5 EFFECTIVE LENGTHS - MEMBERS

| Member No. | Buckling Possible | Buckling About Axis y Possible | $k_{cr,y}$ | $L_{cr,y}$ [m] | Buckling About Axis z Possible | $k_{cr,z}$ | $L_{cr,z}$ [m] | Lateral-Torsional Buckling Possible | $k_z$ | $k_w$ | $L_w$ [m] | $L_T$ [m] |
|---|---|---|---|---|---|---|---|---|---|---|---|---|
| 20 | ☒ | ☒ | 1.00 | 2.770 | ☒ | 1.00 | 2.770 | ☒ | 1.0 | 1.0 | 2.770 | 2.770 |
| 22 | ☒ | ☒ | 1.00 | 4.268 | ☒ | 1.00 | 4.268 | ☐ | 1.0 | 1.0 | 4.268 | 4.268 |
| 23 | ☒ | ☒ | 1.00 | 2.770 | ☒ | 1.00 | 2.770 | ☒ | 1.0 | 1.0 | 2.770 | 2.770 |
| 24 | ☒ | ☒ | 1.00 | 4.268 | ☒ | 1.00 | 4.268 | ☐ | 1.0 | 1.0 | 4.268 | 4.268 |
| 25 | ☒ | ☒ | 1.00 | 4.268 | ☒ | 1.00 | 4.268 | ☐ | 1.0 | 1.0 | 4.268 | 4.268 |
| 26 | ☒ | ☒ | 1.00 | 0.580 | ☒ | 1.00 | 0.580 | ☒ | 1.0 | 1.0 | 0.580 | 0.580 |
| 27 | ☒ | ☒ | 1.00 | 4.268 | ☒ | 1.00 | 4.268 | ☐ | 1.0 | 1.0 | 4.268 | 4.268 |
| 28 | ☒ | ☒ | 1.00 | 4.239 | ☒ | 1.00 | 4.239 | ☐ | 1.0 | 1.0 | 4.239 | 4.239 |
| 29 | ☒ | ☒ | 1.00 | 1.670 | ☒ | 1.00 | 1.670 | ☒ | 1.0 | 1.0 | 1.670 | 1.670 |
| 30 | ☒ | ☒ | 1.00 | 8.568 | ☒ | 1.00 | 8.568 | ☐ | 1.0 | 1.0 | 8.568 | 8.568 |
| 31 | ☒ | ☒ | 1.00 | 2.375 | ☒ | 1.00 | 2.375 | ☒ | 1.0 | 1.0 | 2.375 | 2.375 |
| 32 | ☒ | ☒ | 1.00 | 2.375 | ☒ | 1.00 | 2.375 | ☒ | 1.0 | 1.0 | 2.375 | 2.375 |
| 33 | ☒ | ☒ | 1.00 | 2.375 | ☒ | 1.00 | 2.375 | ☒ | 1.0 | 1.0 | 2.375 | 2.375 |
| 34 | ☒ | ☒ | 1.00 | 2.770 | ☒ | 1.00 | 2.770 | ☒ | 1.0 | 1.0 | 2.770 | 2.770 |
| 35 | ☒ | ☒ | 1.00 | 2.375 | ☒ | 1.00 | 2.375 | ☒ | 1.0 | 1.0 | 2.375 | 2.375 |
| 36 | ☒ | ☒ | 1.00 | 2.375 | ☒ | 1.00 | 2.375 | ☒ | 1.0 | 1.0 | 2.375 | 2.375 |
| 37 | ☒ | ☒ | 1.00 | 1.188 | ☒ | 1.00 | 1.188 | ☒ | 1.0 | 1.0 | 1.188 | 1.188 |
| 38 | ☒ | ☒ | 1.00 | 2.375 | ☒ | 1.00 | 2.375 | ☒ | 1.0 | 1.0 | 2.375 | 2.375 |
| 39 | ☒ | ☒ | 1.00 | 2.375 | ☒ | 1.00 | 2.375 | ☒ | 1.0 | 1.0 | 2.375 | 2.375 |
| 40 | ☒ | ☒ | 1.00 | 2.375 | ☒ | 1.00 | 2.375 | ☒ | 1.0 | 1.0 | 2.375 | 2.375 |
| 41 | ☒ | ☒ | 1.00 | 2.375 | ☒ | 1.00 | 2.375 | ☒ | 1.0 | 1.0 | 2.375 | 2.375 |
| 42 | ☒ | ☒ | 1.00 | 2.375 | ☒ | 1.00 | 2.375 | ☒ | 1.0 | 1.0 | 2.375 | 2.375 |
| 43 | ☒ | ☒ | 1.00 | 1.187 | ☒ | 1.00 | 1.187 | ☒ | 1.0 | 1.0 | 1.187 | 1.187 |
| 44 | ☒ | ☒ | 1.00 | 2.375 | ☒ | 1.00 | 2.375 | ☒ | 1.0 | 1.0 | 2.375 | 2.375 |
| 45 | ☒ | ☒ | 1.00 | 2.375 | ☒ | 1.00 | 2.375 | ☒ | 1.0 | 1.0 | 2.375 | 2.375 |
| 46 | ☒ | ☒ | 1.00 | 1.850 | ☒ | 1.00 | 1.850 | ☒ | 1.0 | 1.0 | 1.850 | 1.850 |
| 47 | ☒ | ☒ | 1.00 | 2.375 | ☒ | 1.00 | 2.375 | ☒ | 1.0 | 1.0 | 2.375 | 2.375 |
| 48 | ☒ | ☒ | 1.00 | 1.850 | ☒ | 1.00 | 1.850 | ☒ | 1.0 | 1.0 | 1.850 | 1.850 |
| 49 | ☒ | ☒ | 1.00 | 1.188 | ☒ | 1.00 | 1.188 | ☒ | 1.0 | 1.0 | 1.188 | 1.188 |
| 50 | ☒ | ☒ | 1.00 | 1.850 | ☒ | 1.00 | 1.850 | ☒ | 1.0 | 1.0 | 1.850 | 1.850 |
| 51 | ☒ | ☒ | 1.00 | 3.563 | ☒ | 1.00 | 3.563 | ☒ | 1.0 | 1.0 | 3.563 | 3.563 |
| 52 | ☒ | ☒ | 1.00 | 1.580 | ☒ | 1.00 | 1.580 | ☒ | 1.0 | 1.0 | 1.580 | 1.580 |
| 53 | ☒ | ☒ | 1.00 | 1.580 | ☒ | 1.00 | 1.580 | ☒ | 1.0 | 1.0 | 1.580 | 1.580 |
| 54 | ☒ | ☒ | 1.00 | 8.900 | ☒ | 1.00 | 8.900 | ☒ | 1.0 | 1.0 | 8.900 | 8.900 |
| 55 | ☒ | ☒ | 1.00 | 8.900 | ☒ | 1.00 | 8.900 | ☒ | 1.0 | 1.0 | 8.900 | 8.900 |
| 56 | ☒ | ☒ | 1.00 | 8.900 | ☒ | 1.00 | 8.900 | ☒ | 1.0 | 1.0 | 8.900 | 8.900 |
| 57 | ☒ | ☒ | 1.00 | 9.070 | ☒ | 1.00 | 9.070 | ☒ | 1.0 | 1.0 | 9.070 | 9.070 |
| 58 | ☒ | ☒ | 1.00 | 9.070 | ☒ | 1.00 | 9.070 | ☒ | 1.0 | 1.0 | 9.070 | 9.070 |
| 59 | ☒ | ☒ | 1.00 | 9.070 | ☒ | 1.00 | 9.070 | ☒ | 1.0 | 1.0 | 9.070 | 9.070 |
| 60 | ☒ | ☒ | 1.00 | 8.900 | ☒ | 1.00 | 8.900 | ☒ | 1.0 | 1.0 | 8.900 | 8.900 |
| 61 | ☒ | ☒ | 1.00 | 9.070 | ☒ | 1.00 | 9.070 | ☒ | 1.0 | 1.0 | 9.070 | 9.070 |
| 62 | ☒ | ☒ | 1.00 | 5.590 | ☒ | 1.00 | 5.590 | ☒ | 1.0 | 1.0 | 5.590 | 5.590 |
| 63 | ☒ | ☒ | 1.00 | 5.590 | ☒ | 1.00 | 5.590 | ☒ | 1.0 | 1.0 | 5.590 | 5.590 |
| 64 | ☒ | ☒ | 1.00 | 2.770 | ☒ | 1.00 | 2.770 | ☒ | 1.0 | 1.0 | 2.770 | 2.770 |
| 65 | ☒ | ☒ | 1.00 | 2.240 | ☒ | 1.00 | 2.240 | ☒ | 1.0 | 1.0 | 2.240 | 2.240 |
| 66 | ☒ | ☒ | 1.00 | 2.240 | ☒ | 1.00 | 2.240 | ☒ | 1.0 | 1.0 | 2.240 | 2.240 |
| 67 | ☒ | ☒ | 1.00 | 5.590 | ☒ | 1.00 | 5.590 | ☒ | 1.0 | 1.0 | 5.590 | 5.590 |
| 68 | ☒ | ☒ | 1.00 | 5.590 | ☒ | 1.00 | 5.590 | ☒ | 1.0 | 1.0 | 5.590 | 5.590 |
| 69 | ☒ | ☒ | 1.00 | 1.580 | ☒ | 1.00 | 1.580 | ☒ | 1.0 | 1.0 | 1.580 | 1.580 |
| 70 | ☒ | ☒ | 1.00 | 1.580 | ☒ | 1.00 | 1.580 | ☒ | 1.0 | 1.0 | 1.580 | 1.580 |
| 71 | ☒ | ☒ | 1.00 | 2.240 | ☒ | 1.00 | 2.240 | ☒ | 1.0 | 1.0 | 2.240 | 2.240 |
| 72 | ☒ | ☒ | 1.00 | 3.563 | ☒ | 1.00 | 3.563 | ☐ | 1.0 | 1.0 | 3.563 | 3.563 |
| 73 | ☒ | ☒ | 1.00 | 2.375 | ☒ | 1.00 | 2.375 | ☒ | 1.0 | 1.0 | 2.375 | 2.375 |
| 74 | ☒ | ☒ | 1.00 | 5.590 | ☒ | 1.00 | 5.590 | ☒ | 1.0 | 1.0 | 5.590 | 5.590 |
| 75 | ☒ | ☒ | 1.00 | 5.590 | ☒ | 1.00 | 5.590 | ☒ | 1.0 | 1.0 | 5.590 | 5.590 |
| 76 | ☒ | ☒ | 1.00 | 2.375 | ☒ | 1.00 | 2.375 | ☒ | 1.0 | 1.0 | 2.375 | 2.375 |
| 77 | ☒ | ☒ | 1.00 | 2.375 | ☒ | 1.00 | 2.375 | ☒ | 1.0 | 1.0 | 2.375 | 2.375 |
| 78 | ☒ | ☒ | 1.00 | 0.525 | ☒ | 1.00 | 0.525 | ☒ | 1.0 | 1.0 | 0.525 | 0.525 |
| 79 | ☒ | ☒ | 1.00 | 5.590 | ☒ | 1.00 | 5.590 | ☒ | 1.0 | 1.0 | 5.590 | 5.590 |
| 80 | ☒ | ☒ | 1.00 | 3.563 | ☒ | 1.00 | 3.563 | ☒ | 1.0 | 1.0 | 3.563 | 3.563 |
| 81 | ☒ | ☒ | 1.00 | 5.590 | ☒ | 1.00 | 5.590 | ☒ | 1.0 | 1.0 | 5.590 | 5.590 |
| 82 | ☒ | ☒ | 1.00 | 3.562 | ☒ | 1.00 | 3.562 | ☒ | 1.0 | 1.0 | 3.562 | 3.562 |
| 83 | ☒ | ☒ | 1.00 | 3.562 | ☒ | 1.00 | 3.562 | ☒ | 1.0 | 1.0 | 3.562 | 3.562 |
| 84 | ☒ | ☒ | 1.00 | 2.240 | ☒ | 1.00 | 2.240 | ☐ | 1.0 | 1.0 | 2.240 | 2.240 |
| 85 | ☒ | ☒ | 1.00 | 2.240 | ☒ | 1.00 | 2.240 | ☐ | 1.0 | 1.0 | 2.240 | 2.240 |
| 86 | ☒ | ☒ | 1.00 | 4.980 | ☒ | 1.00 | 4.980 | ☒ | 1.0 | 1.0 | 4.980 | 4.980 |
| 87 | ☒ | ☒ | 1.00 | 4.980 | ☒ | 1.00 | 4.980 | ☒ | 1.0 | 1.0 | 4.980 | 4.980 |
| 88 | ☒ | ☒ | 1.00 | 3.563 | ☒ | 1.00 | 3.563 | ☒ | 1.0 | 1.0 | 3.563 | 3.563 |
| 90 | ☒ | ☒ | 1.00 | 3.563 | ☒ | 1.00 | 3.563 | ☒ | 1.0 | 1.0 | 3.563 | 3.563 |
| 91 | ☒ | ☒ | 1.00 | 3.563 | ☒ | 1.00 | 3.563 | ☒ | 1.0 | 1.0 | 3.563 | 3.563 |
| 93 | ☒ | ☒ | 1.00 | 2.240 | ☒ | 1.00 | 2.240 | ☒ | 1.0 | 1.0 | 2.240 | 2.240 |
| 94 | ☒ | ☒ | 1.00 | 2.240 | ☒ | 1.00 | 2.240 | ☒ | 1.0 | 1.0 | 2.240 | 2.240 |
| 95 | ☒ | ☒ | 1.00 | 2.240 | ☒ | 1.00 | 2.240 | ☒ | 1.0 | 1.0 | 2.240 | 2.240 |
| 96 | ☒ | ☒ | 1.00 | 2.240 | ☒ | 1.00 | 2.240 | ☒ | 1.0 | 1.0 | 2.240 | 2.240 |
| 97 | ☒ | ☒ | 1.00 | 2.240 | ☒ | 1.00 | 2.240 | ☒ | 1.0 | 1.0 | 2.240 | 2.240 |
| 98 | ☒ | ☒ | 1.00 | 2.240 | ☒ | 1.00 | 2.240 | ☐ | 1.0 | 1.0 | 2.240 | 2.240 |
| 99 | ☒ | ☒ | 1.00 | 3.563 | ☒ | 1.00 | 3.563 | ☒ | 1.0 | 1.0 | 3.563 | 3.563 |
| 100 | ☒ | ☒ | 1.00 | 2.240 | ☒ | 1.00 | 2.240 | ☐ | 1.0 | 1.0 | 2.240 | 2.240 |
| 101 | ☒ | ☒ | 1.00 | 3.562 | ☒ | 1.00 | 3.562 | ☒ | 1.0 | 1.0 | 3.562 | 3.562 |
| 102 | ☒ | ☒ | 1.00 | 3.563 | ☒ | 1.00 | 3.563 | ☒ | 1.0 | 1.0 | 3.563 | 3.563 |
| 103 | ☒ | ☒ | 1.00 | 3.220 | ☒ | 1.00 | 3.220 | ☒ | 1.0 | 1.0 | 3.220 | 3.220 |
| 104 | ☒ | ☒ | 1.00 | 1.610 | ☒ | 1.00 | 1.610 | ☒ | 1.0 | 1.0 | 1.610 | 1.610 |
| 105 | ☒ | ☒ | 1.00 | 3.563 | ☒ | 1.00 | 3.563 | ☒ | 1.0 | 1.0 | 3.563 | 3.563 |
| 106 | ☒ | ☒ | 1.00 | 3.562 | ☒ | 1.00 | 3.562 | ☒ | 1.0 | 1.0 | 3.562 | 3.562 |
| 107 | ☒ | ☒ | 1.00 | 3.820 | ☒ | 1.00 | 3.820 | ☒ | 1.0 | 1.0 | 3.820 | 3.820 |
| 108 | ☒ | ☒ | 1.00 | 3.820 | ☒ | 1.00 | 3.820 | ☒ | 1.0 | 1.0 | 3.820 | 3.820 |
| 109 | ☒ | ☒ | 1.00 | 3.563 | ☒ | 1.00 | 3.563 | ☐ | 1.0 | 1.0 | 3.563 | 3.563 |
| 110 | ☒ | ☒ | 1.00 | 3.562 | ☒ | 1.00 | 3.562 | ☒ | 1.0 | 1.0 | 3.562 | 3.562 |
| 111 | ☒ | ☒ | 1.00 | 2.780 | ☒ | 1.00 | 2.780 | ☒ | 1.0 | 1.0 | 2.780 | 2.780 |
| 112 | ☒ | ☒ | 1.00 | 3.140 | ☒ | 1.00 | 3.140 | ☒ | 1.0 | 1.0 | 3.140 | 3.140 |
| 113 | ☒ | ☒ | 1.00 | 1.188 | ☒ | 1.00 | 1.188 | ☒ | 1.0 | 1.0 | 1.188 | 1.188 |
| 114 | ☒ | ☒ | 1.00 | 3.820 | ☒ | 1.00 | 3.820 | ☒ | 1.0 | 1.0 | 3.820 | 3.820 |
| 115 | ☒ | ☒ | 1.00 | 2.780 | ☒ | 1.00 | 2.780 | ☒ | 1.0 | 1.0 | 2.780 | 2.780 |
| 116 | ☒ | ☒ | 1.00 | 3.140 | ☒ | 1.00 | 3.140 | ☒ | 1.0 | 1.0 | 3.140 | 3.140 |

## 1.5 EFFECTIVE LENGTHS - MEMBERS

| Member No. | Buckling Possible | Buckling About Axis y | | | Buckling About Axis z | | | Lateral-Torsional Buckling | | | | |
|---|---|---|---|---|---|---|---|---|---|---|---|---|
| | | Possible | $k_{cr,y}$ | $L_{cr,y}$ [m] | Possible | $k_{cr,z}$ | $L_{cr,z}$ [m] | Possible | $k_z$ | $k_w$ | $L_w$ [m] | $L_T$ [m] |
| 117 | ☒ | ☒ | 1.00 | 3.562 | ☒ | 1.00 | 3.562 | ☐ | 1.0 | 1.0 | 3.562 | 3.562 |
| 118 | ☒ | ☒ | 1.00 | 3.820 | ☒ | 1.00 | 3.820 | ☒ | 1.0 | 1.0 | 3.820 | 3.820 |
| 119 | ☒ | ☒ | 1.00 | 2.780 | ☒ | 1.00 | 2.780 | ☒ | 1.0 | 1.0 | 2.780 | 2.780 |
| 120 | ☒ | ☒ | 1.00 | 3.140 | ☒ | 1.00 | 3.140 | ☒ | 1.0 | 1.0 | 3.140 | 3.140 |
| 121 | ☒ | ☒ | 1.00 | 3.562 | ☒ | 1.00 | 3.562 | ☒ | 1.0 | 1.0 | 3.562 | 3.562 |
| 122 | ☒ | ☒ | 1.00 | 4.980 | ☒ | 1.00 | 4.980 | ☒ | 1.0 | 1.0 | 4.980 | 4.980 |
| 123 | ☒ | ☒ | 1.00 | 5.590 | ☒ | 1.00 | 5.590 | ☒ | 1.0 | 1.0 | 5.590 | 5.590 |
| 124 | ☒ | ☒ | 1.00 | 0.660 | ☒ | 1.00 | 0.660 | ☒ | 1.0 | 1.0 | 0.660 | 0.660 |
| 125 | ☒ | ☒ | 1.00 | 5.590 | ☒ | 1.00 | 5.590 | ☒ | 1.0 | 1.0 | 5.590 | 5.590 |
| 126 | ☒ | ☒ | 1.00 | 0.660 | ☒ | 1.00 | 0.660 | ☒ | 1.0 | 1.0 | 0.660 | 0.660 |
| 127 | ☒ | ☒ | 1.00 | 5.590 | ☒ | 1.00 | 5.590 | ☒ | 1.0 | 1.0 | 5.590 | 5.590 |
| 128 | ☒ | ☒ | 1.00 | 0.660 | ☒ | 1.00 | 0.660 | ☒ | 1.0 | 1.0 | 0.660 | 0.660 |
| 129 | ☒ | ☒ | 1.00 | 5.590 | ☒ | 1.00 | 5.590 | ☒ | 1.0 | 1.0 | 5.590 | 5.590 |
| 130 | ☒ | ☒ | 1.00 | 0.660 | ☒ | 1.00 | 0.660 | ☒ | 1.0 | 1.0 | 0.660 | 0.660 |
| 131 | ☒ | ☒ | 1.00 | 5.590 | ☒ | 1.00 | 5.590 | ☒ | 1.0 | 1.0 | 5.590 | 5.590 |
| 132 | ☒ | ☒ | 1.00 | 3.562 | ☒ | 1.00 | 3.562 | ☐ | 1.0 | 1.0 | 3.562 | 3.562 |
| 133 | ☒ | ☒ | 1.00 | 5.590 | ☒ | 1.00 | 5.590 | ☒ | 1.0 | 1.0 | 5.590 | 5.590 |
| 134 | ☒ | ☒ | 1.00 | 1.873 | ☒ | 1.00 | 1.873 | ☒ | 1.0 | 1.0 | 1.873 | 1.873 |
| 135 | ☒ | ☒ | 1.00 | 3.820 | ☒ | 1.00 | 3.820 | ☒ | 1.0 | 1.0 | 3.820 | 3.820 |
| 136 | ☒ | ☒ | 1.00 | 2.780 | ☒ | 1.00 | 2.780 | ☒ | 1.0 | 1.0 | 2.780 | 2.780 |
| 137 | ☒ | ☒ | 1.00 | 0.660 | ☒ | 1.00 | 0.660 | ☒ | 1.0 | 1.0 | 0.660 | 0.660 |
| 138 | ☒ | ☒ | 1.00 | 3.563 | ☒ | 1.00 | 3.563 | ☒ | 1.0 | 1.0 | 3.563 | 3.563 |
| 139 | ☒ | ☒ | 1.00 | 4.980 | ☒ | 1.00 | 4.980 | ☒ | 1.0 | 1.0 | 4.980 | 4.980 |
| 140 | ☒ | ☒ | 1.00 | 2.375 | ☒ | 1.00 | 2.375 | ☒ | 1.0 | 1.0 | 2.375 | 2.375 |
| 141 | ☒ | ☒ | 1.00 | 2.375 | ☒ | 1.00 | 2.375 | ☒ | 1.0 | 1.0 | 2.375 | 2.375 |
| 142 | ☒ | ☒ | 1.00 | 2.375 | ☒ | 1.00 | 2.375 | ☒ | 1.0 | 1.0 | 2.375 | 2.375 |
| 143 | ☒ | ☒ | 1.00 | 2.375 | ☒ | 1.00 | 2.375 | ☒ | 1.0 | 1.0 | 2.375 | 2.375 |
| 144 | ☒ | ☒ | 1.00 | 2.375 | ☒ | 1.00 | 2.375 | ☒ | 1.0 | 1.0 | 2.375 | 2.375 |
| 145 | ☒ | ☒ | 1.00 | 2.375 | ☒ | 1.00 | 2.375 | ☒ | 1.0 | 1.0 | 2.375 | 2.375 |
| 146 | ☒ | ☒ | 1.00 | 2.375 | ☒ | 1.00 | 2.375 | ☒ | 1.0 | 1.0 | 2.375 | 2.375 |
| 147 | ☒ | ☒ | 1.00 | 2.375 | ☒ | 1.00 | 2.375 | ☒ | 1.0 | 1.0 | 2.375 | 2.375 |
| 148 | ☒ | ☒ | 1.00 | 2.375 | ☒ | 1.00 | 2.375 | ☒ | 1.0 | 1.0 | 2.375 | 2.375 |
| 149 | ☒ | ☒ | 1.00 | 2.375 | ☒ | 1.00 | 2.375 | ☒ | 1.0 | 1.0 | 2.375 | 2.375 |
| 150 | ☒ | ☒ | 1.00 | 2.375 | ☒ | 1.00 | 2.375 | ☒ | 1.0 | 1.0 | 2.375 | 2.375 |
| 151 | ☒ | ☒ | 1.00 | 2.375 | ☒ | 1.00 | 2.375 | ☒ | 1.0 | 1.0 | 2.375 | 2.375 |
| 152 | ☒ | ☒ | 1.00 | 0.525 | ☒ | 1.00 | 0.525 | ☒ | 1.0 | 1.0 | 0.525 | 0.525 |
| 153 | ☒ | ☒ | 1.00 | 3.820 | ☒ | 1.00 | 3.820 | ☒ | 1.0 | 1.0 | 3.820 | 3.820 |
| 154 | ☒ | ☒ | 1.00 | 0.660 | ☒ | 1.00 | 0.660 | ☒ | 1.0 | 1.0 | 0.660 | 0.660 |
| 155 | ☒ | ☒ | 1.00 | 0.525 | ☒ | 1.00 | 0.525 | ☒ | 1.0 | 1.0 | 0.525 | 0.525 |
| 156 | ☒ | ☒ | 1.00 | 1.160 | ☒ | 1.00 | 1.160 | ☒ | 1.0 | 1.0 | 1.160 | 1.160 |
| 157 | ☒ | ☒ | 1.00 | 1.747 | ☒ | 1.00 | 1.747 | ☒ | 1.0 | 1.0 | 1.747 | 1.747 |
| 158 | ☒ | ☒ | 1.00 | 1.348 | ☒ | 1.00 | 1.348 | ☒ | 1.0 | 1.0 | 1.348 | 1.348 |
| 159 | ☒ | ☒ | 1.00 | 3.563 | ☒ | 1.00 | 3.563 | ☒ | 1.0 | 1.0 | 3.563 | 3.563 |
| 160 | ☒ | ☒ | 1.00 | 3.562 | ☒ | 1.00 | 3.562 | ☒ | 1.0 | 1.0 | 3.562 | 3.562 |
| 161 | ☒ | ☒ | 1.00 | 3.562 | ☒ | 1.00 | 3.562 | ☒ | 1.0 | 1.0 | 3.562 | 3.562 |
| 162 | ☒ | ☒ | 1.00 | 3.562 | ☒ | 1.00 | 3.562 | ☒ | 1.0 | 1.0 | 3.562 | 3.562 |
| 163 | ☒ | ☒ | 1.00 | 3.562 | ☒ | 1.00 | 3.562 | ☒ | 1.0 | 1.0 | 3.562 | 3.562 |
| 164 | ☒ | ☒ | 1.00 | 3.562 | ☒ | 1.00 | 3.562 | ☒ | 1.0 | 1.0 | 3.562 | 3.562 |
| 165 | ☒ | ☒ | 1.00 | 3.563 | ☒ | 1.00 | 3.563 | ☒ | 1.0 | 1.0 | 3.563 | 3.563 |
| 166 | ☒ | ☒ | 1.00 | 3.040 | ☒ | 1.00 | 3.040 | ☒ | 1.0 | 1.0 | 3.040 | 3.040 |
| 167 | ☒ | ☒ | 1.00 | 3.039 | ☒ | 1.00 | 3.039 | ☒ | 1.0 | 1.0 | 3.039 | 3.039 |
| 168 | ☒ | ☒ | 1.00 | 3.039 | ☒ | 1.00 | 3.039 | ☒ | 1.0 | 1.0 | 3.039 | 3.039 |
| 169 | ☒ | ☒ | 1.00 | 3.563 | ☒ | 1.00 | 3.563 | ☒ | 1.0 | 1.0 | 3.563 | 3.563 |
| 170 | ☒ | ☒ | 1.00 | 3.563 | ☒ | 1.00 | 3.563 | ☒ | 1.0 | 1.0 | 3.563 | 3.563 |
| 171 | ☒ | ☒ | 1.00 | 3.563 | ☒ | 1.00 | 3.563 | ☒ | 1.0 | 1.0 | 3.563 | 3.563 |
| 172 | ☒ | ☒ | 1.00 | 3.563 | ☒ | 1.00 | 3.563 | ☒ | 1.0 | 1.0 | 3.563 | 3.563 |
| 173 | ☒ | ☒ | 1.00 | 4.390 | ☒ | 1.00 | 4.390 | ☒ | 1.0 | 1.0 | 4.390 | 4.390 |
| 174 | ☒ | ☒ | 1.00 | 3.563 | ☒ | 1.00 | 3.563 | ☒ | 1.0 | 1.0 | 3.563 | 3.563 |
| 175 | ☒ | ☒ | 1.00 | 2.785 | ☒ | 1.00 | 2.785 | ☐ | 1.0 | 1.0 | 2.785 | 2.785 |
| 176 | ☒ | ☒ | 1.00 | 3.808 | ☒ | 1.00 | 3.808 | ☒ | 1.0 | 1.0 | 3.808 | 3.808 |
| 177 | ☒ | ☒ | 1.00 | 0.660 | ☒ | 1.00 | 0.660 | ☒ | 1.0 | 1.0 | 0.660 | 0.660 |
| 178 | ☒ | ☒ | 1.00 | 3.808 | ☒ | 1.00 | 3.808 | ☒ | 1.0 | 1.0 | 3.808 | 3.808 |
| 179 | ☒ | ☒ | 1.00 | 3.808 | ☒ | 1.00 | 3.808 | ☒ | 1.0 | 1.0 | 3.808 | 3.808 |
| 180 | ☒ | ☒ | 1.00 | 3.808 | ☒ | 1.00 | 3.808 | ☒ | 1.0 | 1.0 | 3.808 | 3.808 |
| 181 | ☒ | ☒ | 1.00 | 0.660 | ☒ | 1.00 | 0.660 | ☒ | 1.0 | 1.0 | 0.660 | 0.660 |
| 182 | ☒ | ☒ | 1.00 | 0.660 | ☒ | 1.00 | 0.660 | ☒ | 1.0 | 1.0 | 0.660 | 0.660 |
| 183 | ☒ | ☒ | 1.00 | 0.660 | ☒ | 1.00 | 0.660 | ☒ | 1.0 | 1.0 | 0.660 | 0.660 |
| 184 | ☒ | ☒ | 1.00 | 3.220 | ☒ | 1.00 | 3.220 | ☒ | 1.0 | 1.0 | 3.220 | 3.220 |
| 185 | ☒ | ☒ | 1.00 | 3.563 | ☒ | 1.00 | 3.563 | ☒ | 1.0 | 1.0 | 3.563 | 3.563 |
| 186 | ☒ | ☒ | 1.00 | 3.563 | ☒ | 1.00 | 3.563 | ☒ | 1.0 | 1.0 | 3.563 | 3.563 |
| 187 | ☒ | ☒ | 1.00 | 3.563 | ☒ | 1.00 | 3.563 | ☒ | 1.0 | 1.0 | 3.563 | 3.563 |
| 189 | ☒ | ☒ | 1.00 | 2.785 | ☒ | 1.00 | 2.785 | ☐ | 1.0 | 1.0 | 2.785 | 2.785 |
| 190 | ☒ | ☒ | 1.00 | 3.816 | ☒ | 1.00 | 3.816 | ☐ | 1.0 | 1.0 | 3.816 | 3.816 |
| 191 | ☒ | ☒ | 1.00 | 3.563 | ☒ | 1.00 | 3.563 | ☒ | 1.0 | 1.0 | 3.563 | 3.563 |
| 192 | ☒ | ☒ | 1.00 | 2.785 | ☒ | 1.00 | 2.785 | ☐ | 1.0 | 1.0 | 2.785 | 2.785 |
| 193 | ☒ | ☒ | 1.00 | 3.039 | ☒ | 1.00 | 3.039 | ☒ | 1.0 | 1.0 | 3.039 | 3.039 |
| 194 | ☒ | ☒ | 1.00 | 3.563 | ☒ | 1.00 | 3.563 | ☒ | 1.0 | 1.0 | 3.563 | 3.563 |
| 195 | ☒ | ☒ | 1.00 | 4.293 | ☒ | 1.00 | 4.293 | ☐ | 1.0 | 1.0 | 4.293 | 4.293 |
| 196 | ☒ | ☒ | 1.00 | 2.520 | ☒ | 1.00 | 2.520 | ☐ | 1.0 | 1.0 | 2.520 | 2.520 |
| 197 | ☒ | ☒ | 1.00 | 2.785 | ☒ | 1.00 | 2.785 | ☐ | 1.0 | 1.0 | 2.785 | 2.785 |
| 198 | ☒ | ☒ | 1.00 | 3.040 | ☒ | 1.00 | 3.040 | ☒ | 1.0 | 1.0 | 3.040 | 3.040 |
| 199 | ☒ | ☒ | 1.00 | 2.375 | ☒ | 1.00 | 2.375 | ☒ | 1.0 | 1.0 | 2.375 | 2.375 |
| 200 | ☒ | ☒ | 1.00 | 1.348 | ☒ | 1.00 | 1.348 | ☒ | 1.0 | 1.0 | 1.348 | 1.348 |
| 202 | ☒ | ☒ | 1.00 | 1.033 | ☒ | 1.00 | 1.033 | ☒ | 1.0 | 1.0 | 1.033 | 1.033 |
| 203 | ☒ | ☒ | 1.00 | 3.562 | ☒ | 1.00 | 3.562 | ☐ | 1.0 | 1.0 | 3.562 | 3.562 |
| 204 | ☒ | ☒ | 1.00 | 3.562 | ☒ | 1.00 | 3.562 | ☐ | 1.0 | 1.0 | 3.562 | 3.562 |
| 205 | ☒ | ☒ | 1.00 | 3.563 | ☒ | 1.00 | 3.563 | ☒ | 1.0 | 1.0 | 3.563 | 3.563 |
| 206 | ☒ | ☒ | 1.00 | 3.938 | ☒ | 1.00 | 3.938 | ☐ | 1.0 | 1.0 | 3.938 | 3.938 |
| 207 | ☒ | ☒ | 1.00 | 4.602 | ☒ | 1.00 | 4.602 | ☐ | 1.0 | 1.0 | 4.602 | 4.602 |
| 208 | ☒ | ☒ | 1.00 | 3.563 | ☒ | 1.00 | 3.563 | ☒ | 1.0 | 1.0 | 3.563 | 3.563 |
| 209 | ☒ | ☒ | 1.00 | 3.210 | ☒ | 1.00 | 3.210 | ☐ | 1.0 | 1.0 | 3.210 | 3.210 |
| 210 | ☒ | ☒ | 1.00 | 1.187 | ☒ | 1.00 | 1.187 | ☒ | 1.0 | 1.0 | 1.187 | 1.187 |
| 211 | ☒ | ☒ | 1.00 | 2.375 | ☒ | 1.00 | 2.375 | ☒ | 1.0 | 1.0 | 2.375 | 2.375 |
| 212 | ☒ | ☒ | 1.00 | 3.563 | ☒ | 1.00 | 3.563 | ☐ | 1.0 | 1.0 | 3.563 | 3.563 |

## 1.5 EFFECTIVE LENGTHS - MEMBERS

| Member No. | Buckling Possible | Buckling About Axis y Possible | $k_{cr,y}$ | $L_{cr,y}$ [m] | Buckling About Axis z Possible | $k_{cr,z}$ | $L_{cr,z}$ [m] | Lateral-Torsional Buckling Possible | $k_z$ | $k_w$ | $L_w$ [m] | $L_T$ [m] |
|---|---|---|---|---|---|---|---|---|---|---|---|---|
| 213 | ☒ | ☒ | 1.00 | 3.140 | ☒ | 1.00 | 3.140 | ☒ | 1.0 | 1.0 | 3.140 | 3.140 |
| 214 | ☒ | ☒ | 1.00 | 1.348 | ☒ | 1.00 | 1.348 | ☒ | 1.0 | 1.0 | 1.348 | 1.348 |
| 215 | ☒ | ☒ | 1.00 | 3.816 | ☒ | 1.00 | 3.816 | ☐ | 1.0 | 1.0 | 3.816 | 3.816 |
| 216 | ☒ | ☒ | 1.00 | 1.188 | ☒ | 1.00 | 1.188 | ☒ | 1.0 | 1.0 | 1.188 | 1.188 |
| 217 | ☒ | ☒ | 1.00 | 3.562 | ☒ | 1.00 | 3.562 | ☒ | 1.0 | 1.0 | 3.562 | 3.562 |
| 218 | ☒ | ☒ | 1.00 | 3.210 | ☒ | 1.00 | 3.210 | ☐ | 1.0 | 1.0 | 3.210 | 3.210 |
| 219 | ☒ | ☒ | 1.00 | 1.610 | ☒ | 1.00 | 1.610 | ☒ | 1.0 | 1.0 | 1.610 | 1.610 |
| 220 | ☒ | ☒ | 1.00 | 3.562 | ☒ | 1.00 | 3.562 | ☒ | 1.0 | 1.0 | 3.562 | 3.562 |
| 221 | ☒ | ☒ | 1.00 | 1.187 | ☒ | 1.00 | 1.187 | ☒ | 1.0 | 1.0 | 1.187 | 1.187 |
| 222 | ☒ | ☒ | 1.00 | 3.563 | ☒ | 1.00 | 3.563 | ☐ | 1.0 | 1.0 | 3.563 | 3.563 |
| 223 | ☒ | ☒ | 1.00 | 2.375 | ☒ | 1.00 | 2.375 | ☒ | 1.0 | 1.0 | 2.375 | 2.375 |
| 224 | ☒ | ☒ | 1.00 | 2.375 | ☒ | 1.00 | 2.375 | ☒ | 1.0 | 1.0 | 2.375 | 2.375 |
| 225 | ☒ | ☒ | 1.00 | 2.375 | ☒ | 1.00 | 2.375 | ☒ | 1.0 | 1.0 | 2.375 | 2.375 |
| 226 | ☒ | ☒ | 1.00 | 2.375 | ☒ | 1.00 | 2.375 | ☒ | 1.0 | 1.0 | 2.375 | 2.375 |
| 227 | ☒ | ☒ | 1.00 | 2.375 | ☒ | 1.00 | 2.375 | ☒ | 1.0 | 1.0 | 2.375 | 2.375 |
| 228 | ☒ | ☒ | 1.00 | 1.850 | ☒ | 1.00 | 1.850 | ☒ | 1.0 | 1.0 | 1.850 | 1.850 |
| 229 | ☒ | ☒ | 1.00 | 0.262 | ☒ | 1.00 | 0.262 | ☒ | 1.0 | 1.0 | 0.262 | 0.262 |
| 230 | ☒ | ☒ | 1.00 | 1.160 | ☒ | 1.00 | 1.160 | ☒ | 1.0 | 1.0 | 1.160 | 1.160 |
| 231 | ☒ | ☒ | 1.00 | 8.060 | ☒ | 1.00 | 8.060 | ☐ | 1.0 | 1.0 | 8.060 | 8.060 |
| 232 | ☒ | ☒ | 1.00 | 3.563 | ☒ | 1.00 | 3.563 | ☐ | 1.0 | 1.0 | 3.563 | 3.563 |
| 233 | ☒ | ☒ | 1.00 | 3.140 | ☒ | 1.00 | 3.140 | ☐ | 1.0 | 1.0 | 3.140 | 3.140 |
| 234 | ☒ | ☒ | 1.00 | 1.482 | ☒ | 1.00 | 1.482 | ☐ | 1.0 | 1.0 | 1.482 | 1.482 |
| 235 | ☒ | ☒ | 1.00 | 2.785 | ☒ | 1.00 | 2.785 | ☐ | 1.0 | 1.0 | 2.785 | 2.785 |
| 236 | ☒ | ☒ | 1.00 | 1.482 | ☒ | 1.00 | 1.482 | ☐ | 1.0 | 1.0 | 1.482 | 1.482 |
| 237 | ☒ | ☒ | 1.00 | 2.785 | ☒ | 1.00 | 2.785 | ☐ | 1.0 | 1.0 | 2.785 | 2.785 |
| 238 | ☒ | ☒ | 1.00 | 4.239 | ☒ | 1.00 | 4.239 | ☐ | 1.0 | 1.0 | 4.239 | 4.239 |
| 239 | ☒ | ☒ | 1.00 | 0.580 | ☒ | 1.00 | 0.580 | ☒ | 1.0 | 1.0 | 0.580 | 0.580 |
| 240 | ☒ | ☒ | 1.00 | 6.164 | ☒ | 1.00 | 6.164 | ☐ | 1.0 | 1.0 | 6.164 | 6.164 |
| 241 | ☒ | ☒ | 1.00 | 3.924 | ☒ | 1.00 | 3.924 | ☐ | 1.0 | 1.0 | 3.924 | 3.924 |
| 242 | ☒ | ☒ | 1.00 | 6.164 | ☒ | 1.00 | 6.164 | ☐ | 1.0 | 1.0 | 6.164 | 6.164 |
| 243 | ☒ | ☒ | 1.00 | 3.924 | ☒ | 1.00 | 3.924 | ☐ | 1.0 | 1.0 | 3.924 | 3.924 |
| 244 | ☒ | ☒ | 1.00 | 1.482 | ☒ | 1.00 | 1.482 | ☐ | 1.0 | 1.0 | 1.482 | 1.482 |
| 245 | ☒ | ☒ | 1.00 | 2.785 | ☒ | 1.00 | 2.785 | ☐ | 1.0 | 1.0 | 2.785 | 2.785 |
| 246 | ☒ | ☒ | 1.00 | 6.164 | ☒ | 1.00 | 6.164 | ☐ | 1.0 | 1.0 | 6.164 | 6.164 |
| 247 | ☒ | ☒ | 1.00 | 3.924 | ☒ | 1.00 | 3.924 | ☐ | 1.0 | 1.0 | 3.924 | 3.924 |
| 248 | ☒ | ☒ | 1.00 | 1.482 | ☒ | 1.00 | 1.482 | ☐ | 1.0 | 1.0 | 1.482 | 1.482 |
| 249 | ☒ | ☒ | 1.00 | 2.785 | ☒ | 1.00 | 2.785 | ☐ | 1.0 | 1.0 | 2.785 | 2.785 |
| 250 | ☒ | ☒ | 1.00 | 6.164 | ☒ | 1.00 | 6.164 | ☐ | 1.0 | 1.0 | 6.164 | 6.164 |
| 251 | ☒ | ☒ | 1.00 | 3.924 | ☒ | 1.00 | 3.924 | ☐ | 1.0 | 1.0 | 3.924 | 3.924 |
| 252 | ☒ | ☒ | 1.00 | 2.016 | ☒ | 1.00 | 2.016 | ☐ | 1.0 | 1.0 | 2.016 | 2.016 |
| 253 | ☒ | ☒ | 1.00 | 2.225 | ☒ | 1.00 | 2.225 | ☒ | 1.0 | 1.0 | 2.225 | 2.225 |
| 254 | ☒ | ☒ | 1.00 | 4.268 | ☒ | 1.00 | 4.268 | ☐ | 1.0 | 1.0 | 4.268 | 4.268 |
| 255 | ☒ | ☒ | 1.00 | 4.239 | ☒ | 1.00 | 4.239 | ☐ | 1.0 | 1.0 | 4.239 | 4.239 |
| 256 | ☒ | ☒ | 1.00 | 4.268 | ☒ | 1.00 | 4.268 | ☐ | 1.0 | 1.0 | 4.268 | 4.268 |
| 257 | ☒ | ☒ | 1.00 | 4.239 | ☒ | 1.00 | 4.239 | ☐ | 1.0 | 1.0 | 4.239 | 4.239 |
| 258 | ☒ | ☒ | 1.00 | 2.785 | ☒ | 1.00 | 2.785 | ☐ | 1.0 | 1.0 | 2.785 | 2.785 |
| 259 | ☒ | ☒ | 1.00 | 0.580 | ☒ | 1.00 | 0.580 | ☒ | 1.0 | 1.0 | 0.580 | 0.580 |
| 260 | ☒ | ☒ | 1.00 | 8.811 | ☒ | 1.00 | 8.811 | ☐ | 1.0 | 1.0 | 8.811 | 8.811 |
| 261 | ☒ | ☒ | 1.00 | 3.624 | ☒ | 1.00 | 3.624 | ☐ | 1.0 | 1.0 | 3.624 | 3.624 |
| 262 | ☒ | ☒ | 1.00 | 2.785 | ☒ | 1.00 | 2.785 | ☐ | 1.0 | 1.0 | 2.785 | 2.785 |
| 263 | ☒ | ☒ | 1.00 | 0.580 | ☒ | 1.00 | 0.580 | ☒ | 1.0 | 1.0 | 0.580 | 0.580 |
| 264 | ☒ | ☒ | 1.00 | 8.811 | ☒ | 1.00 | 8.811 | ☐ | 1.0 | 1.0 | 8.811 | 8.811 |
| 265 | ☒ | ☒ | 1.00 | 3.624 | ☒ | 1.00 | 3.624 | ☐ | 1.0 | 1.0 | 3.624 | 3.624 |
| 266 | ☒ | ☒ | 1.00 | 4.268 | ☒ | 1.00 | 4.268 | ☐ | 1.0 | 1.0 | 4.268 | 4.268 |
| 267 | ☒ | ☒ | 1.00 | 4.239 | ☒ | 1.00 | 4.239 | ☐ | 1.0 | 1.0 | 4.239 | 4.239 |
| 268 | ☒ | ☒ | 1.00 | 2.785 | ☒ | 1.00 | 2.785 | ☐ | 1.0 | 1.0 | 2.785 | 2.785 |
| 269 | ☒ | ☒ | 1.00 | 0.580 | ☒ | 1.00 | 0.580 | ☒ | 1.0 | 1.0 | 0.580 | 0.580 |
| 270 | ☒ | ☒ | 1.00 | 8.811 | ☒ | 1.00 | 8.811 | ☐ | 1.0 | 1.0 | 8.811 | 8.811 |
| 271 | ☒ | ☒ | 1.00 | 3.624 | ☒ | 1.00 | 3.624 | ☐ | 1.0 | 1.0 | 3.624 | 3.624 |
| 272 | ☒ | ☒ | 1.00 | 4.268 | ☒ | 1.00 | 4.268 | ☐ | 1.0 | 1.0 | 4.268 | 4.268 |
| 273 | ☒ | ☒ | 1.00 | 4.239 | ☒ | 1.00 | 4.239 | ☐ | 1.0 | 1.0 | 4.239 | 4.239 |
| 274 | ☒ | ☒ | 1.00 | 2.785 | ☒ | 1.00 | 2.785 | ☐ | 1.0 | 1.0 | 2.785 | 2.785 |
| 275 | ☒ | ☒ | 1.00 | 0.580 | ☒ | 1.00 | 0.580 | ☒ | 1.0 | 1.0 | 0.580 | 0.580 |
| 276 | ☒ | ☒ | 1.00 | 8.811 | ☒ | 1.00 | 8.811 | ☐ | 1.0 | 1.0 | 8.811 | 8.811 |
| 277 | ☒ | ☒ | 1.00 | 3.624 | ☒ | 1.00 | 3.624 | ☐ | 1.0 | 1.0 | 3.624 | 3.624 |
| 278 | ☒ | ☒ | 1.00 | 4.268 | ☒ | 1.00 | 4.268 | ☐ | 1.0 | 1.0 | 4.268 | 4.268 |
| 279 | ☒ | ☒ | 1.00 | 1.750 | ☒ | 1.00 | 1.750 | ☒ | 1.0 | 1.0 | 1.750 | 1.750 |
| 280 | ☒ | ☒ | 1.00 | 7.125 | ☒ | 1.00 | 7.125 | ☐ | 1.0 | 1.0 | 7.125 | 7.125 |
| 281 | ☒ | ☒ | 1.00 | 7.125 | ☒ | 1.00 | 7.125 | ☐ | 1.0 | 1.0 | 7.125 | 7.125 |
| 282 | ☒ | ☒ | 1.00 | 0.615 | ☒ | 1.00 | 0.615 | ☐ | 1.0 | 1.0 | 0.615 | 0.615 |
| 283 | ☒ | ☒ | 1.00 | 7.125 | ☒ | 1.00 | 7.125 | ☐ | 1.0 | 1.0 | 7.125 | 7.125 |
| 284 | ☒ | ☒ | 1.00 | 7.125 | ☒ | 1.00 | 7.125 | ☐ | 1.0 | 1.0 | 7.125 | 7.125 |
| 285 | ☒ | ☒ | 1.00 | 1.610 | ☒ | 1.00 | 1.610 | ☒ | 1.0 | 1.0 | 1.610 | 1.610 |
| 286 | ☒ | ☒ | 1.00 | 3.563 | ☒ | 1.00 | 3.563 | ☐ | 1.0 | 1.0 | 3.563 | 3.563 |
| 287 | ☒ | ☒ | 1.00 | 3.563 | ☒ | 1.00 | 3.563 | ☐ | 1.0 | 1.0 | 3.563 | 3.563 |
| 288 | ☒ | ☒ | 1.00 | 0.615 | ☒ | 1.00 | 0.615 | ☒ | 1.0 | 1.0 | 0.615 | 0.615 |
| 289 | ☒ | ☒ | 1.00 | 7.125 | ☒ | 1.00 | 7.125 | ☐ | 1.0 | 1.0 | 7.125 | 7.125 |
| 290 | ☒ | ☒ | 1.00 | 7.125 | ☒ | 1.00 | 7.125 | ☐ | 1.0 | 1.0 | 7.125 | 7.125 |
| 291 | ☒ | ☒ | 1.00 | 4.268 | ☒ | 1.00 | 4.268 | ☐ | 1.0 | 1.0 | 4.268 | 4.268 |
| 292 | ☒ | ☒ | 1.00 | 4.239 | ☒ | 1.00 | 4.239 | ☐ | 1.0 | 1.0 | 4.239 | 4.239 |
| 293 | ☒ | ☒ | 1.00 | 3.366 | ☒ | 1.00 | 3.366 | ☐ | 1.0 | 1.0 | 3.366 | 3.366 |
| 294 | ☒ | ☒ | 1.00 | 8.811 | ☒ | 1.00 | 8.811 | ☐ | 1.0 | 1.0 | 8.811 | 8.811 |
| 295 | ☒ | ☒ | 1.00 | 3.624 | ☒ | 1.00 | 3.624 | ☐ | 1.0 | 1.0 | 3.624 | 3.624 |
| 296 | ☒ | ☒ | 1.00 | 7.877 | ☒ | 1.00 | 7.877 | ☐ | 1.0 | 1.0 | 7.877 | 7.877 |
| 297 | ☒ | ☒ | 1.00 | 10.531 | ☒ | 1.00 | 10.531 | ☐ | 1.0 | 1.0 | 10.531 | 10.531 |
| 298 | ☒ | ☒ | 1.00 | 7.877 | ☒ | 1.00 | 7.877 | ☐ | 1.0 | 1.0 | 7.877 | 7.877 |
| 299 | ☒ | ☒ | 1.00 | 10.531 | ☒ | 1.00 | 10.531 | ☐ | 1.0 | 1.0 | 10.531 | 10.531 |
| 300 | ☒ | ☒ | 1.00 | 7.877 | ☒ | 1.00 | 7.877 | ☐ | 1.0 | 1.0 | 7.877 | 7.877 |
| 301 | ☒ | ☒ | 1.00 | 10.531 | ☒ | 1.00 | 10.531 | ☐ | 1.0 | 1.0 | 10.531 | 10.531 |
| 302 | ☒ | ☒ | 1.00 | 10.531 | ☒ | 1.00 | 10.531 | ☐ | 1.0 | 1.0 | 10.531 | 10.531 |
| 303 | ☒ | ☒ | 1.00 | 3.938 | ☒ | 1.00 | 3.938 | ☐ | 1.0 | 1.0 | 3.938 | 3.938 |
| 304 | ☒ | ☒ | 1.00 | 10.357 | ☒ | 1.00 | 10.357 | ☐ | 1.0 | 1.0 | 10.357 | 10.357 |
| 305 | ☒ | ☒ | 1.00 | 4.268 | ☒ | 1.00 | 4.268 | ☐ | 1.0 | 1.0 | 4.268 | 4.268 |
| 306 | ☒ | ☒ | 1.00 | 9.204 | ☒ | 1.00 | 9.204 | ☐ | 1.0 | 1.0 | 9.204 | 9.204 |

## 1.5 EFFECTIVE LENGTHS - MEMBERS

| Member No. | Buckling Possible | Buckling About Axis y Possible | $k_{cr,y}$ | $L_{cr,y}$ [m] | Buckling About Axis z Possible | $k_{cr,z}$ | $L_{cr,z}$ [m] | Lateral-Torsional Buckling Possible | $k_z$ | $k_w$ | $L_w$ [m] | $L_T$ [m] |
|---|---|---|---|---|---|---|---|---|---|---|---|---|
| 307 | ☒ | ☒ | 1.00 | 4.268 | ☒ | 1.00 | 4.268 | ☐ | 1.0 | 1.0 | 4.268 | 4.268 |
| 308 | ☒ | ☒ | 1.00 | 4.268 | ☒ | 1.00 | 4.268 | ☐ | 1.0 | 1.0 | 4.268 | 4.268 |
| 309 | ☒ | ☒ | 1.00 | 4.268 | ☒ | 1.00 | 4.268 | ☐ | 1.0 | 1.0 | 4.268 | 4.268 |
| 310 | ☒ | ☒ | 1.00 | 9.204 | ☒ | 1.00 | 9.204 | ☐ | 1.0 | 1.0 | 9.204 | 9.204 |
| 311 | ☒ | ☒ | 1.00 | 9.204 | ☒ | 1.00 | 9.204 | ☐ | 1.0 | 1.0 | 9.204 | 9.204 |
| 312 | ☒ | ☒ | 1.00 | 4.602 | ☒ | 1.00 | 4.602 | ☐ | 1.0 | 1.0 | 4.602 | 4.602 |
| 313 | ☒ | ☒ | 1.00 | 9.046 | ☒ | 1.00 | 9.046 | ☐ | 1.0 | 1.0 | 9.046 | 9.046 |
| 314 | ☒ | ☒ | 1.00 | 7.740 | ☒ | 1.00 | 7.740 | ☐ | 1.0 | 1.0 | 7.740 | 7.740 |
| 315 | ☒ | ☒ | 1.00 | 2.375 | ☒ | 1.00 | 2.375 | ☒ | 1.0 | 1.0 | 2.375 | 2.375 |
| 316 | ☒ | ☒ | 1.00 | 2.375 | ☒ | 1.00 | 2.375 | ☒ | 1.0 | 1.0 | 2.375 | 2.375 |
| 317 | ☒ | ☒ | 1.00 | 3.820 | ☒ | 1.00 | 3.820 | ☒ | 1.0 | 1.0 | 3.820 | 3.820 |
| 318 | ☒ | ☒ | 1.00 | 3.820 | ☒ | 1.00 | 3.820 | ☒ | 1.0 | 1.0 | 3.820 | 3.820 |
| 319 | ☒ | ☒ | 1.00 | 1.187 | ☒ | 1.00 | 1.187 | ☒ | 1.0 | 1.0 | 1.187 | 1.187 |
| 320 | ☒ | ☒ | 1.00 | 2.375 | ☒ | 1.00 | 2.375 | ☒ | 1.0 | 1.0 | 2.375 | 2.375 |
| 321 | ☒ | ☒ | 1.00 | 2.780 | ☒ | 1.00 | 2.780 | ☒ | 1.0 | 1.0 | 2.780 | 2.780 |
| 322 | ☒ | ☒ | 1.00 | 2.780 | ☒ | 1.00 | 2.780 | ☒ | 1.0 | 1.0 | 2.780 | 2.780 |
| 323 | ☒ | ☒ | 1.00 | 3.820 | ☒ | 1.00 | 3.820 | ☒ | 1.0 | 1.0 | 3.820 | 3.820 |
| 324 | ☒ | ☒ | 1.00 | 3.820 | ☒ | 1.00 | 3.820 | ☒ | 1.0 | 1.0 | 3.820 | 3.820 |
| 325 | ☒ | ☒ | 1.00 | 2.780 | ☒ | 1.00 | 2.780 | ☒ | 1.0 | 1.0 | 2.780 | 2.780 |
| 326 | ☒ | ☒ | 1.00 | 2.780 | ☒ | 1.00 | 2.780 | ☒ | 1.0 | 1.0 | 2.780 | 2.780 |
| 327 | ☒ | ☒ | 1.00 | 3.820 | ☒ | 1.00 | 3.820 | ☒ | 1.0 | 1.0 | 3.820 | 3.820 |
| 328 | ☒ | ☒ | 1.00 | 3.820 | ☒ | 1.00 | 3.820 | ☒ | 1.0 | 1.0 | 3.820 | 3.820 |
| 329 | ☒ | ☒ | 1.00 | 2.780 | ☒ | 1.00 | 2.780 | ☒ | 1.0 | 1.0 | 2.780 | 2.780 |
| 330 | ☒ | ☒ | 1.00 | 2.780 | ☒ | 1.00 | 2.780 | ☒ | 1.0 | 1.0 | 2.780 | 2.780 |
| 331 | ☒ | ☒ | 1.00 | 3.820 | ☒ | 1.00 | 3.820 | ☒ | 1.0 | 1.0 | 3.820 | 3.820 |
| 332 | ☒ | ☒ | 1.00 | 3.820 | ☒ | 1.00 | 3.820 | ☒ | 1.0 | 1.0 | 3.820 | 3.820 |
| 333 | ☒ | ☒ | 1.00 | 2.780 | ☒ | 1.00 | 2.780 | ☒ | 1.0 | 1.0 | 2.780 | 2.780 |
| 334 | ☒ | ☒ | 1.00 | 2.780 | ☒ | 1.00 | 2.780 | ☒ | 1.0 | 1.0 | 2.780 | 2.780 |
| 335 | ☒ | ☒ | 1.00 | 1.873 | ☒ | 1.00 | 1.873 | ☒ | 1.0 | 1.0 | 1.873 | 1.873 |
| 336 | ☒ | ☒ | 1.00 | 1.873 | ☒ | 1.00 | 1.873 | ☒ | 1.0 | 1.0 | 1.873 | 1.873 |
| 337 | ☒ | ☒ | 1.00 | 3.820 | ☒ | 1.00 | 3.820 | ☒ | 1.0 | 1.0 | 3.820 | 3.820 |
| 338 | ☒ | ☒ | 1.00 | 0.525 | ☒ | 1.00 | 0.525 | ☒ | 1.0 | 1.0 | 0.525 | 0.525 |
| 339 | ☒ | ☒ | 1.00 | 3.220 | ☒ | 1.00 | 3.220 | ☒ | 1.0 | 1.0 | 3.220 | 3.220 |
| 340 | ☒ | ☒ | 1.00 | 0.615 | ☒ | 1.00 | 0.615 | ☒ | 1.0 | 1.0 | 0.615 | 0.615 |
| 341 | ☒ | ☒ | 1.00 | 0.615 | ☒ | 1.00 | 0.615 | ☒ | 1.0 | 1.0 | 0.615 | 0.615 |
| 342 | ☒ | ☒ | 1.00 | 0.615 | ☒ | 1.00 | 0.615 | ☐ | 1.0 | 1.0 | 0.615 | 0.615 |
| 343 | ☒ | ☒ | 1.00 | 0.615 | ☒ | 1.00 | 0.615 | ☒ | 1.0 | 1.0 | 0.615 | 0.615 |
| 344 | ☒ | ☒ | 1.00 | 1.035 | ☒ | 1.00 | 1.035 | ☒ | 1.0 | 1.0 | 1.035 | 1.035 |
| 345 | ☒ | ☒ | 1.00 | 0.270 | ☒ | 1.00 | 0.270 | ☒ | 1.0 | 1.0 | 0.270 | 0.270 |
| 346 | ☒ | ☒ | 1.00 | 0.271 | ☒ | 1.00 | 0.271 | ☒ | 1.0 | 1.0 | 0.271 | 0.271 |
| 347 | ☒ | ☒ | 1.00 | 0.271 | ☒ | 1.00 | 0.271 | ☒ | 1.0 | 1.0 | 0.271 | 0.271 |
| 348 | ☒ | ☒ | 1.00 | 1.670 | ☒ | 1.00 | 1.670 | ☒ | 1.0 | 1.0 | 1.670 | 1.670 |
| 349 | ☒ | ☒ | 1.00 | 0.271 | ☒ | 1.00 | 0.271 | ☒ | 1.0 | 1.0 | 0.271 | 0.271 |
| 350 | ☒ | ☒ | 1.00 | 3.563 | ☒ | 1.00 | 3.563 | ☒ | 1.0 | 1.0 | 3.563 | 3.563 |
| 351 | ☒ | ☒ | 1.00 | 0.270 | ☒ | 1.00 | 0.270 | ☒ | 1.0 | 1.0 | 0.270 | 0.270 |
| 352 | ☒ | ☒ | 1.00 | 0.100 | ☒ | 1.00 | 0.100 | ☒ | 1.0 | 1.0 | 0.100 | 0.100 |
| 353 | ☒ | ☒ | 1.00 | 2.785 | ☒ | 1.00 | 2.785 | ☒ | 1.0 | 1.0 | 2.785 | 2.785 |
| 354 | ☒ | ☒ | 1.00 | 2.225 | ☒ | 1.00 | 2.225 | ☒ | 1.0 | 1.0 | 2.225 | 2.225 |
| 355 | ☒ | ☒ | 1.00 | 1.750 | ☒ | 1.00 | 1.750 | ☒ | 1.0 | 1.0 | 1.750 | 1.750 |
| 356 | ☒ | ☒ | 1.00 | 3.366 | ☒ | 1.00 | 3.366 | ☐ | 1.0 | 1.0 | 3.366 | 3.366 |
| 357 | ☒ | ☒ | 1.00 | 1.670 | ☒ | 1.00 | 1.670 | ☒ | 1.0 | 1.0 | 1.670 | 1.670 |
| 358 | ☒ | ☒ | 1.00 | 3.310 | ☒ | 1.00 | 3.310 | ☐ | 1.0 | 1.0 | 3.310 | 3.310 |
| 359 | ☒ | ☒ | 1.00 | 1.348 | ☒ | 1.00 | 1.348 | ☒ | 1.0 | 1.0 | 1.348 | 1.348 |
| 360 | ☒ | ☒ | 1.00 | 0.510 | ☒ | 1.00 | 0.510 | ☒ | 1.0 | 1.0 | 0.510 | 0.510 |
| 361 | ☒ | ☒ | 1.00 | 1.747 | ☒ | 1.00 | 1.747 | ☒ | 1.0 | 1.0 | 1.747 | 1.747 |
| 362 | ☒ | ☒ | 1.00 | 2.375 | ☒ | 1.00 | 2.375 | ☒ | 1.0 | 1.0 | 2.375 | 2.375 |
| 363 | ☒ | ☒ | 1.00 | 0.660 | ☒ | 1.00 | 0.660 | ☒ | 1.0 | 1.0 | 0.660 | 0.660 |
| 364 | ☒ | ☒ | 1.00 | 0.660 | ☒ | 1.00 | 0.660 | ☒ | 1.0 | 1.0 | 0.660 | 0.660 |
| 365 | ☒ | ☒ | 1.00 | 0.660 | ☒ | 1.00 | 0.660 | ☒ | 1.0 | 1.0 | 0.660 | 0.660 |
| 366 | ☒ | ☒ | 1.00 | 0.660 | ☒ | 1.00 | 0.660 | ☒ | 1.0 | 1.0 | 0.660 | 0.660 |
| 367 | ☒ | ☒ | 1.00 | 0.660 | ☒ | 1.00 | 0.660 | ☒ | 1.0 | 1.0 | 0.660 | 0.660 |
| 368 | ☒ | ☒ | 1.00 | 0.660 | ☒ | 1.00 | 0.660 | ☒ | 1.0 | 1.0 | 0.660 | 0.660 |
| 369 | ☒ | ☒ | 1.00 | 0.660 | ☒ | 1.00 | 0.660 | ☒ | 1.0 | 1.0 | 0.660 | 0.660 |
| 370 | ☒ | ☒ | 1.00 | 0.660 | ☒ | 1.00 | 0.660 | ☒ | 1.0 | 1.0 | 0.660 | 0.660 |
| 371 | ☒ | ☒ | 1.00 | 0.660 | ☒ | 1.00 | 0.660 | ☒ | 1.0 | 1.0 | 0.660 | 0.660 |
| 372 | ☒ | ☒ | 1.00 | 2.780 | ☒ | 1.00 | 2.780 | ☒ | 1.0 | 1.0 | 2.780 | 2.780 |
| 373 | ☒ | ☒ | 1.00 | 1.747 | ☒ | 1.00 | 1.747 | ☒ | 1.0 | 1.0 | 1.747 | 1.747 |
| 460 | ☒ | ☒ | 1.00 | 2.780 | ☒ | 1.00 | 2.780 | ☒ | 1.0 | 1.0 | 2.780 | 2.780 |
| 461 | ☒ | ☒ | 1.00 | 0.510 | ☒ | 1.00 | 0.510 | ☒ | 1.0 | 1.0 | 0.510 | 0.510 |
| 469 | ☒ | ☒ | 1.00 | 2.240 | ☒ | 1.00 | 2.240 | ☐ | 1.0 | 1.0 | 2.240 | 2.240 |
| 470 | ☒ | ☒ | 1.00 | 2.240 | ☒ | 1.00 | 2.240 | ☐ | 1.0 | 1.0 | 2.240 | 2.240 |
| 471 | ☒ | ☒ | 1.00 | 2.240 | ☒ | 1.00 | 2.240 | ☐ | 1.0 | 1.0 | 2.240 | 2.240 |
| 472 | ☒ | ☒ | 1.00 | 2.240 | ☒ | 1.00 | 2.240 | ☐ | 1.0 | 1.0 | 2.240 | 2.240 |
| 474 | ☒ | ☒ | 1.00 | 4.208 | ☒ | 1.00 | 4.208 | ☐ | 1.0 | 1.0 | 4.208 | 4.208 |
| 476 | ☒ | ☒ | 1.00 | 4.208 | ☒ | 1.00 | 4.208 | ☐ | 1.0 | 1.0 | 4.208 | 4.208 |
| 479 | ☒ | ☒ | 1.00 | 4.208 | ☒ | 1.00 | 4.208 | ☐ | 1.0 | 1.0 | 4.208 | 4.208 |
| 480 | ☒ | ☒ | 1.00 | 4.208 | ☒ | 1.00 | 4.208 | ☐ | 1.0 | 1.0 | 4.208 | 4.208 |
| 483 | ☒ | ☒ | 1.00 | 4.208 | ☒ | 1.00 | 4.208 | ☐ | 1.0 | 1.0 | 4.208 | 4.208 |
| 484 | ☒ | ☒ | 1.00 | 4.208 | ☒ | 1.00 | 4.208 | ☐ | 1.0 | 1.0 | 4.208 | 4.208 |
| 487 | ☒ | ☒ | 1.00 | 4.208 | ☒ | 1.00 | 4.208 | ☐ | 1.0 | 1.0 | 4.208 | 4.208 |
| 488 | ☒ | ☒ | 1.00 | 4.208 | ☒ | 1.00 | 4.208 | ☐ | 1.0 | 1.0 | 4.208 | 4.208 |
| 490 | ☒ | ☒ | 1.00 | 3.923 | ☒ | 1.00 | 3.923 | ☐ | 1.0 | 1.0 | 3.923 | 3.923 |
| 492 | ☒ | ☒ | 1.00 | 3.040 | ☒ | 1.00 | 3.040 | ☒ | 1.0 | 1.0 | 3.040 | 3.040 |
| 493 | ☒ | ☒ | 1.00 | 2.780 | ☒ | 1.00 | 2.780 | ☐ | 1.0 | 1.0 | 2.780 | 2.780 |
| 494 | ☒ | ☒ | 1.00 | 3.562 | ☒ | 1.00 | 3.562 | ☐ | 1.0 | 1.0 | 3.562 | 3.562 |
| 495 | ☒ | ☒ | 1.00 | 3.563 | ☒ | 1.00 | 3.563 | ☒ | 1.0 | 1.0 | 3.563 | 3.563 |
| 496 | ☒ | ☒ | 1.00 | 2.785 | ☒ | 1.00 | 2.785 | ☐ | 1.0 | 1.0 | 2.785 | 2.785 |
| 497 | ☒ | ☒ | 1.00 | 3.040 | ☒ | 1.00 | 3.040 | ☐ | 1.0 | 1.0 | 3.040 | 3.040 |
| 498 | ☒ | ☒ | 1.00 | 0.270 | ☒ | 1.00 | 0.270 | ☐ | 1.0 | 1.0 | 0.270 | 0.270 |
| 499 | ☒ | ☒ | 1.00 | 3.563 | ☒ | 1.00 | 3.563 | ☒ | 1.0 | 1.0 | 3.563 | 3.563 |
| 500 | ☒ | ☒ | 1.00 | 3.563 | ☒ | 1.00 | 3.563 | ☒ | 1.0 | 1.0 | 3.563 | 3.563 |
| 501 | ☒ | ☒ | 1.00 | 3.039 | ☒ | 1.00 | 3.039 | ☐ | 1.0 | 1.0 | 3.039 | 3.039 |
| 502 | ☒ | ☒ | 1.00 | 0.271 | ☒ | 1.00 | 0.271 | ☐ | 1.0 | 1.0 | 0.271 | 0.271 |
| 503 | ☒ | ☒ | 1.00 | 3.039 | ☒ | 1.00 | 3.039 | ☐ | 1.0 | 1.0 | 3.039 | 3.039 |

## 1.5 EFFECTIVE LENGTHS - MEMBERS

| Member No. | Buckling Possible | Buckling About Axis y Possible | $k_{cr,y}$ | $L_{cr,y}$ [m] | Buckling About Axis z Possible | $k_{cr,z}$ | $L_{cr,z}$ [m] | Lateral-Torsional Buckling Possible | $k_z$ | $k_w$ | $L_w$ [m] | $L_T$ [m] |
|---|---|---|---|---|---|---|---|---|---|---|---|---|
| 504 | ☒ | ☒ | 1.00 | 0.271 | ☒ | 1.00 | 0.271 | ☐ | 1.0 | 1.0 | 0.271 | 0.271 |
| 505 | ☒ | ☒ | 1.00 | 3.039 | ☒ | 1.00 | 3.039 | ☐ | 1.0 | 1.0 | 3.039 | 3.039 |
| 506 | ☒ | ☒ | 1.00 | 0.271 | ☒ | 1.00 | 0.271 | ☐ | 1.0 | 1.0 | 0.271 | 0.271 |
| 507 | ☒ | ☒ | 1.00 | 4.522 | ☒ | 1.00 | 4.522 | ☐ | 1.0 | 1.0 | 4.522 | 4.522 |
| 508 | ☒ | ☒ | 1.00 | 4.522 | ☒ | 1.00 | 4.522 | ☐ | 1.0 | 1.0 | 4.522 | 4.522 |
| 509 | ☒ | ☒ | 1.00 | 5.559 | ☒ | 1.00 | 5.559 | ☐ | 1.0 | 1.0 | 5.559 | 5.559 |
| 510 | ☒ | ☒ | 1.00 | 5.559 | ☒ | 1.00 | 5.559 | ☐ | 1.0 | 1.0 | 5.559 | 5.559 |
| 511 | ☒ | ☒ | 1.00 | 5.559 | ☒ | 1.00 | 5.559 | ☐ | 1.0 | 1.0 | 5.559 | 5.559 |
| 512 | ☒ | ☒ | 1.00 | 5.559 | ☒ | 1.00 | 5.559 | ☐ | 1.0 | 1.0 | 5.559 | 5.559 |
| 513 | ☒ | ☒ | 1.00 | 6.241 | ☒ | 1.00 | 6.241 | ☐ | 1.0 | 1.0 | 6.241 | 6.241 |
| 514 | ☒ | ☒ | 1.00 | 6.241 | ☒ | 1.00 | 6.241 | ☐ | 1.0 | 1.0 | 6.241 | 6.241 |
| 515 | ☒ | ☒ | 1.00 | 6.745 | ☒ | 1.00 | 6.745 | ☐ | 1.0 | 1.0 | 6.745 | 6.745 |
| 516 | ☒ | ☒ | 1.00 | 6.745 | ☒ | 1.00 | 6.745 | ☐ | 1.0 | 1.0 | 6.745 | 6.745 |
| 517 | ☒ | ☒ | 1.00 | 4.522 | ☒ | 1.00 | 4.522 | ☐ | 1.0 | 1.0 | 4.522 | 4.522 |
| 518 | ☒ | ☒ | 1.00 | 4.522 | ☒ | 1.00 | 4.522 | ☐ | 1.0 | 1.0 | 4.522 | 4.522 |
| 519 | ☒ | ☒ | 1.00 | 4.522 | ☒ | 1.00 | 4.522 | ☐ | 1.0 | 1.0 | 4.522 | 4.522 |
| 520 | ☒ | ☒ | 1.00 | 4.522 | ☒ | 1.00 | 4.522 | ☐ | 1.0 | 1.0 | 4.522 | 4.522 |
| 521 | ☒ | ☒ | 1.00 | 4.522 | ☒ | 1.00 | 4.522 | ☐ | 1.0 | 1.0 | 4.522 | 4.522 |
| 522 | ☒ | ☒ | 1.00 | 4.522 | ☒ | 1.00 | 4.522 | ☐ | 1.0 | 1.0 | 4.522 | 4.522 |
| 523 | ☒ | ☒ | 1.00 | 1.610 | ☒ | 1.00 | 1.610 | ☒ | 1.0 | 1.0 | 1.610 | 1.610 |
| 524 | ☒ | ☒ | 1.00 | 1.610 | ☒ | 1.00 | 1.610 | ☐ | 1.0 | 1.0 | 1.610 | 1.610 |
| 525 | ☒ | ☒ | 1.00 | 1.610 | ☒ | 1.00 | 1.610 | ☒ | 1.0 | 1.0 | 1.610 | 1.610 |
| 526 | ☒ | ☒ | 1.00 | 2.225 | ☒ | 1.00 | 2.225 | ☒ | 1.0 | 1.0 | 2.225 | 2.225 |
| 527 | ☒ | ☒ | 1.00 | 1.200 | ☒ | 1.00 | 1.200 | ☒ | 1.0 | 1.0 | 1.200 | 1.200 |
| 528 | ☒ | ☒ | 1.00 | 2.119 | ☒ | 1.00 | 2.119 | ☐ | 1.0 | 1.0 | 2.119 | 2.119 |

## 2.2 DESIGN BY CROSS-SECTION

| Sect. No. | Member No. | Location x [m] | LC/CO/ RC | Design | | Equation No. | Description |
|---|---|---|---|---|---|---|---|
| 1 | **IF HE A 240-15 \| Euronorm 53-62** | | | | | | |
| | 231 | 8.060 | EK11 | 0.01 | ≤ 1 | CS101) | Cross-section check - Tension acc. to 6.2.3 |
| | 231 | 0.000 | EK11 | 0.22 | ≤ 1 | CS102) | Cross-section check - Compression acc. to 6.2.4 |
| | 231 | 6.448 | EK11 | 0.01 | ≤ 1 | CS122) | Cross-section check - Shear force in z-axis acc. to 6.2.6(4) - Class 3 or 4 |
| | 231 | 7.254 | EK11 | 0.01 | ≤ 1 | CS124) | Cross-section check - Shear force in y-axis acc. to 6.2.6(4) - Class 3 or 4 |
| | 231 | 6.448 | EK11 | 0.23 | ≤ 1 | CS183) | Cross-section check - Bending, shear and axial force acc. to 6.2.9.2 - Class 3 - General cross-section |
| | 231 | 0.806 | EK11 | 0.24 | ≤ 1 | CS203) | Cross-section check - Bending about z-axis, shear and axial force acc. to 6.2.9.2 - Class 3 - General cross-section |
| | 231 | 0.000 | EK11 | 0.54 | ≤ 1 | CS223) | Cross-section check - Biaxial bending, shear and axial force acc. to 6.2.10 and 6.2.9 - Class 3 - General cross-section |
| | 231 | 0.000 | EK11 | 0.74 | ≤ 1 | ST354) | Stability analysis - Bending and compression acc. to 6.3.3, Method 1 |
| 2 | **HE A 200 \| Euronorm 53-62** | | | | | | |
| | 1 | 0.000 | EK11 | 0.00 | ≤ 1 | CS100) | Negligible internal forces |
| | 1 | 7.890 | EK11 | 0.31 | ≤ 1 | CS101) | Cross-section check - Tension acc. to 6.2.3 |
| | 1 | 0.000 | EK11 | 0.02 | ≤ 1 | CS102) | Cross-section check - Compression acc. to 6.2.4 |
| | 1 | 4.734 | EK11 | 0.01 | ≤ 1 | CS116) | Cross-section check - Bending about z-axis acc. to 6.2.5 - Class 1 or 2 |
| | 1 | 7.890 | EK11 | 0.00 | ≤ 1 | CS121) | Cross-section check - Shear force in z-axis acc. to 6.2.6 |
| | 1 | 7.890 | EK11 | 0.00 | ≤ 1 | CS123) | Cross-section check - Shear force in y-axis acc. to 6.2.6 |
| | 1 | 3.381 | EK11 | 0.00 | ≤ 1 | CS126) | Cross-section check - Shear buckling acc. to 6.2.6(6) |
| | 1 | 4.734 | EK11 | 0.01 | ≤ 1 | CS151) | Cross-section check - Bending about z-axis and shear force acc. to 6.2.5 and 6.2.8 |
| | 1 | 7.890 | EK11 | 0.02 | ≤ 1 | CS161) | Cross-section check - Biaxial bending and shear force acc. to 6.2.6, 6.2.7 and 6.2.9 |
| | 1 | 0.789 | EK11 | 0.27 | ≤ 1 | CS181) | Cross-section check - Bending, shear and axial force acc. to 6.2.9.1 |
| | 1 | 7.890 | EK11 | 0.07 | ≤ 1 | CS201) | Cross-section check - Bending about z-axis, shear and axial force acc. to 6.2.9.1 |
| | 1 | 7.890 | EK11 | 0.07 | ≤ 1 | CS221) | Cross-section check - Biaxial bending, shear and axial force acc. to 6.2.10 and 6.2.9 |
| | 1 | 0.000 | EK11 | 0.03 | ≤ 1 | ST301) | Stability analysis - Flexural buckling about y-axis acc. to 6.3.1.1 and 6.3.1.2(4) |
| | 1 | 0.000 | EK11 | 0.07 | ≤ 1 | ST312) | Stability analysis - Flexural buckling about z-axis acc. to 6.3.1.1 and 6.3.1.2 |
| | 1 | 0.000 | EK11 | 0.03 | ≤ 1 | ST321) | Stability analysis - Torsional buckling acc. to 6.3.1.4 and 6.3.1.2(4) |
| | 1 | 0.789 | EK11 | 0.04 | ≤ 1 | ST363) | Stability analysis - Biaxial bending acc. to 6.3.3, Method 2 |
| | 1 | 0.789 | EK11 | 0.11 | ≤ 1 | ST364) | Stability analysis - Bending and compression acc. to 6.3.3, Method 2 |
| 3 | **HE B 200 \| Euronorm 53-62** | | | | | | |
| | 26 | 0.000 | EK11 | 0.00 | ≤ 1 | CS100) | Negligible internal forces |
| | 34 | 2.770 | EK11 | 0.10 | ≤ 1 | CS101) | Cross-section check - Tension acc. to 6.2.3 |
| | 34 | 0.000 | EK11 | 0.33 | ≤ 1 | CS102) | Cross-section check - Compression acc. to 6.2.4 |
| | 34 | 2.770 | EK11 | 0.03 | ≤ 1 | CS121) | Cross-section check - Shear force in z-axis acc. to 6.2.6 |
| | 4 | 0.000 | EK11 | 0.00 | ≤ 1 | CS126) | Cross-section check - Shear buckling acc. to 6.2.6(6) |
| | 34 | 0.000 | EK11 | 0.44 | ≤ 1 | CS181) | Cross-section check - Bending, shear and axial force acc. to 6.2.9.1 |
| | 34 | 0.000 | EK11 | 0.05 | ≤ 1 | CS221) | Cross-section check - Biaxial bending, shear and axial force acc. to 6.2.10 and 6.2.9 |
| | 4 | 2.617 | EK11 | 0.21 | ≤ 1 | ST301) | Stability analysis - Flexural buckling about y-axis acc. to 6.3.1.1 and 6.3.1.2(4) |
| | 34 | 0.000 | EK11 | 0.12 | ≤ 1 | ST311) | Stability analysis - Flexural buckling about z-axis acc. to 6.3.1.1 and 6.3.1.2(4) |

## 2.2 DESIGN BY CROSS-SECTION

| Sect. No. | Member No. | Location x [m] | LC/CO/ RC | Design | | Equation No. | Description |
|---|---|---|---|---|---|---|---|
| | 4 | 2.617 | EK11 | 0.24 | ≤ 1 | ST312) | Stability analysis - Flexural buckling about z-axis acc. to 6.3.1.1 and 6.3.1.2 |
| | 4 | 2.617 | EK11 | 0.22 | ≤ 1 | ST321) | Stability analysis - Torsional buckling acc. to 6.3.1.4 and 6.3.1.2(4) |
| | 34 | 0.000 | EK11 | 0.09 | ≤ 1 | ST331) | Stability analysis - Lateral torsional buckling acc. to 6.3.2.1 and 6.3.2.3 - I-Section |
| | 34 | 0.000 | EK11 | 0.57 | ≤ 1 | ST364) | Stability analysis - Bending and compression acc. to 6.3.3, Method 2 |
| 4 | **IF IPE 400-6 \| Euronorm 19-57** | | | | | | |
| | 248 | 1.186 | EK11 | 0.00 | ≤ 1 | CS100) | Negligible internal forces |
| | 274 | 2.228 | EK11 | 0.04 | ≤ 1 | CS101) | Cross-section check - Tension acc. to 6.2.3 |
| | 254 | 0.000 | EK11 | 0.12 | ≤ 1 | CS102) | Cross-section check - Compression acc. to 6.2.4 |
| | 254 | 3.841 | EK11 | 0.15 | ≤ 1 | CS103) | Cross-section check - Compression acc. to 6.2.4 - Class 4 |
| | 274 | 0.000 | EK11 | 0.21 | ≤ 1 | CS112) | Cross-section check - Bending about y-axis acc. to 6.2.5 - Class 3 |
| | 236 | 0.000 | EK11 | 0.01 | ≤ 1 | CS113) | Cross-section check - Bending about y-axis acc. to 6.2.5 - Class 4 |
| | 256 | 0.427 | EK11 | 0.02 | ≤ 1 | CS118) | Cross-section check - Bending about z-axis acc. to 6.2.5 - Class 4 |
| | 258 | 2.785 | EK11 | 0.18 | ≤ 1 | CS122) | Cross-section check - Shear force in z-axis acc. to 6.2.6(4) - Class 3 or 4 |
| | 8 | 0.000 | EK11 | 0.01 | ≤ 1 | CS124) | Cross-section check - Shear force in y-axis acc. to 6.2.6(4) - Class 3 or 4 |
| | 274 | 0.000 | EK11 | 0.21 | ≤ 1 | CS143) | Cross-section check - Bending and shear force acc. to 6.2.9.2 and 6.2.10 - Class 3 - General cross-section |
| | 236 | 0.000 | EK11 | 0.01 | ≤ 1 | CS145) | Cross-section check - Bending and shear force acc. to 6.2.9.3 and 6.2.10 - Class 4 |
| | 266 | 0.000 | EK11 | 0.02 | ≤ 1 | CS155) | Cross-section check - Bending about z-axis and shear force acc. to 6.2.9.3 and 6.2.10 - Class 4 |
| | 267 | 0.000 | EK11 | 0.38 | ≤ 1 | CS163) | Cross-section check - Biaxial bending and shear force acc. to 6.2.9.2 and 6.2.10 - Class 3 - General cross-section |
| | 255 | 0.000 | EK11 | 0.05 | ≤ 1 | CS165) | Cross-section check - Biaxial bending and shear force acc. to 6.2.9.3 and 6.2.10 - Class 4 |
| | 258 | 0.000 | EK11 | 0.77 | ≤ 1 | CS183) | Cross-section check - Bending, shear and axial force acc. to 6.2.9.2 - Class 3 - General cross-section |
| | 268 | 0.836 | EK11 | 0.40 | ≤ 1 | CS191) | Cross-section check - Bending, shear and axial force acc. to 6.2.9.3 - Class 4 |
| | 272 | 4.268 | EK11 | 0.04 | ≤ 1 | CS203) | Cross-section check - Bending about z-axis, shear and axial force acc. to 6.2.9.2 - Class 3 - General cross-section |
| | 254 | 3.841 | EK11 | 0.15 | ≤ 1 | CS211) | Cross-section check - Bending about z-axis, shear and axial force acc. to 6.2.9.3 - Class 4 |
| | 258 | 0.000 | EK11 | 0.77 | ≤ 1 | CS223) | Cross-section check - Biaxial bending, shear and axial force acc. to 6.2.10 and 6.2.9 - Class 3 - General cross-section |
| | 254 | 0.854 | EK11 | 0.45 | ≤ 1 | CS231) | Cross-section check - Biaxial bending, shear and axial force acc. to 6.2.10 and 6.2.9.3 - Class 4 |
| | 262 | 1.114 | EK11 | 0.02 | ≤ 1 | ST303) | Stability analysis - Flexural buckling about y-axis acc. to 6.3.1.1 and 6.3.1.2(4) - Class 4 |
| | 262 | 1.114 | EK11 | 0.02 | ≤ 1 | ST313) | Stability analysis - Flexural buckling about z-axis acc. to 6.3.1.1 and 6.3.1.2(4) - Class 4 |
| | 262 | 1.393 | EK11 | 0.84 | ≤ 1 | ST354) | Stability analysis - Bending and compression acc. to 6.3.3, Method 1 |
| 5 | **RO 168.3x6.3 \| EN 10219-2:2006** | | | | | | |
| | 261 | 0.000 | EK11 | 0.63 | ≤ 1 | CS101) | Cross-section check - Tension acc. to 6.2.3 |
| | 277 | 3.624 | EK11 | 0.19 | ≤ 1 | CS102) | Cross-section check - Compression acc. to 6.2.4 |
| | 260 | 4.406 | EK11 | 0.05 | ≤ 1 | CS111) | Cross-section check - Bending about y-axis acc. to 6.2.5 - Class 1 or 2 |
| | 264 | 0.000 | EK11 | 0.01 | ≤ 1 | CS121) | Cross-section check - Shear force in z-axis acc. to 6.2.6 |
| | 260 | 4.406 | EK11 | 0.05 | ≤ 1 | CS141) | Cross-section check - Bending and shear force acc. to 6.2.5 and 6.2.8 |
| | 261 | 1.812 | EK11 | 0.46 | ≤ 1 | CS181) | Cross-section check - Bending, shear and axial force acc. to 6.2.9.1 |
| | 265 | 3.624 | EK11 | 0.07 | ≤ 1 | ST301) | Stability analysis - Flexural buckling about y-axis acc. to 6.3.1.1 and 6.3.1.2(4) |
| | 264 | 0.000 | EK11 | 0.78 | ≤ 1 | ST302) | Stability analysis - Flexural buckling about y-axis acc. to 6.3.1.1 and 6.3.1.2 |
| | 265 | 3.624 | EK11 | 0.07 | ≤ 1 | ST311) | Stability analysis - Flexural buckling about z-axis acc. to 6.3.1.1 and 6.3.1.2(4) |
| | 264 | 0.000 | EK11 | 0.78 | ≤ 1 | ST312) | Stability analysis - Flexural buckling about z-axis acc. to 6.3.1.1 and 6.3.1.2 |
| | 264 | 1.101 | EK11 | 0.95 | ≤ 1 | ST364) | Stability analysis - Bending and compression acc. to 6.3.3, Method 2 |
| 6 | **HE B 260 \| Euronorm 53-62** | | | | | | |
| | 352 | 0.100 | EK11 | 0.15 | ≤ 1 | CS101) | Cross-section check - Tension acc. to 6.2.3 |
| | 67 | 0.000 | EK11 | 0.12 | ≤ 1 | CS102) | Cross-section check - Compression acc. to 6.2.4 |
| | 492 | 2.432 | EK11 | 0.12 | ≤ 1 | CS111) | Cross-section check - Bending about y-axis acc. to 6.2.5 - Class 1 or 2 |
| | 62 | 5.031 | EK11 | 0.10 | ≤ 1 | CS116) | Cross-section check - Bending about z-axis acc. to 6.2.5 - Class 1 or 2 |
| | 288 | 0.000 | EK11 | 0.73 | ≤ 1 | CS121) | Cross-section check - Shear force in z-axis acc. to 6.2.6 |
| | 492 | 0.000 | EK11 | 0.02 | ≤ 1 | CS123) | Cross-section check - Shear force in y-axis acc. to 6.2.6 |
| | 62 | 0.000 | EK11 | 0.00 | ≤ 1 | CS126) | Cross-section check - Shear buckling acc. to 6.2.6(6) |
| | 492 | 2.432 | EK11 | 0.12 | ≤ 1 | CS141) | Cross-section check - Bending and shear force acc. to 6.2.5 and 6.2.8 |
| | 62 | 5.031 | EK11 | 0.10 | ≤ 1 | CS151) | Cross-section check - Bending about z-axis and shear force acc. to 6.2.5 and 6.2.8 |
| | 492 | 0.000 | EK11 | 0.27 | ≤ 1 | CS161) | Cross-section check - Biaxial bending and shear force acc. to 6.2.6, 6.2.7 and 6.2.9 |

## 2.2 DESIGN BY CROSS-SECTION

| Sect. No. | Member No. | Location x [m] | LC/CO/ RC | Design | | Equation No. | Description |
|---|---|---|---|---|---|---|---|
| | 288 | 0.185 | EK11 | 0.54 | ≤ 1 | CS181) | Cross-section check - Bending, shear and axial force acc. to 6.2.9.1 |
| | 492 | 0.000 | EK11 | 0.27 | ≤ 1 | CS201) | Cross-section check - Bending about z-axis, shear and axial force acc. to 6.2.9.1 |
| | 288 | 0.000 | EK11 | 0.59 | ≤ 1 | CS221) | Cross-section check - Biaxial bending, shear and axial force acc. to 6.2.10 and 6.2.9 |
| | 340 | 0.000 | EK11 | 0.49 | ≤ 1 | ST331) | Stability analysis - Lateral torsional buckling acc. to 6.3.2.1 and 6.3.2.3 - I-Section |
| | 343 | 0.000 | EK11 | 0.52 | ≤ 1 | ST363) | Stability analysis - Biaxial bending acc. to 6.3.3, Method 2 |
| | 74 | 0.000 | EK11 | 0.49 | ≤ 1 | ST364) | Stability analysis - Bending and compression acc. to 6.3.3, Method 2 |
| 7 | **HE A 240 \| Euronorm 53-62** | | | | | | |
| | 213 | 3.140 | EK11 | 0.29 | ≤ 1 | CS101) | Cross-section check - Tension acc. to 6.2.3 |
| | 86 | 0.000 | EK11 | 0.14 | ≤ 1 | CS102) | Cross-section check - Compression acc. to 6.2.4 |
| | 213 | 3.140 | EK11 | 0.22 | ≤ 1 | CS116) | Cross-section check - Bending about z-axis acc. to 6.2.5 - Class 1 or 2 |
| | 86 | 2.490 | EK11 | 0.03 | ≤ 1 | CS121) | Cross-section check - Shear force in z-axis acc. to 6.2.6 |
| | 86 | 0.000 | EK11 | 0.01 | ≤ 1 | CS123) | Cross-section check - Shear force in y-axis acc. to 6.2.6 |
| | 86 | 0.000 | EK11 | 0.00 | ≤ 1 | CS126) | Cross-section check - Shear buckling acc. to 6.2.6(6) |
| | 213 | 3.140 | EK11 | 0.22 | ≤ 1 | CS151) | Cross-section check - Bending about z-axis and shear force acc. to 6.2.5 and 6.2.8 |
| | 213 | 2.826 | EK11 | 0.21 | ≤ 1 | CS161) | Cross-section check - Biaxial bending and shear force acc. to 6.2.6, 6.2.7 and 6.2.9 |
| | 213 | 0.942 | EK11 | 0.36 | ≤ 1 | CS181) | Cross-section check - Bending, shear and axial force acc. to 6.2.9.1 |
| | 86 | 0.000 | EK11 | 0.38 | ≤ 1 | CS201) | Cross-section check - Bending about z-axis, shear and axial force acc. to 6.2.9.1 |
| | 86 | 0.000 | EK11 | 0.38 | ≤ 1 | CS221) | Cross-section check - Biaxial bending, shear and axial force acc. to 6.2.10 and 6.2.9 |
| | 86 | 0.000 | EK11 | 0.06 | ≤ 1 | ST331) | Stability analysis - Lateral torsional buckling acc. to 6.3.2.1 and 6.3.2.3 - I-Section |
| | 213 | 0.000 | EK11 | 0.32 | ≤ 1 | ST363) | Stability analysis - Biaxial bending acc. to 6.3.3, Method 2 |
| | 86 | 0.000 | EK11 | 0.52 | ≤ 1 | ST364) | Stability analysis - Bending and compression acc. to 6.3.3, Method 2 |
| 8 | **HE A 300 \| Euronorm 53-62** | | | | | | |
| | 346 | 0.271 | EK11 | 0.11 | ≤ 1 | CS101) | Cross-section check - Tension acc. to 6.2.3 |
| | 167 | 0.000 | EK11 | 0.36 | ≤ 1 | CS102) | Cross-section check - Compression acc. to 6.2.4 |
| | 167 | 1.519 | EK11 | 0.27 | ≤ 1 | CS111) | Cross-section check - Bending about y-axis acc. to 6.2.5 - Class 1 or 2 |
| | 87 | 3.735 | EK11 | 0.10 | ≤ 1 | CS121) | Cross-section check - Shear force in z-axis acc. to 6.2.6 |
| | 87 | 2.490 | EK11 | 0.01 | ≤ 1 | CS123) | Cross-section check - Shear force in y-axis acc. to 6.2.6 |
| | 87 | 0.000 | EK11 | 0.00 | ≤ 1 | CS126) | Cross-section check - Shear buckling acc. to 6.2.6(6) |
| | 167 | 1.519 | EK11 | 0.27 | ≤ 1 | CS141) | Cross-section check - Bending and shear force acc. to 6.2.5 and 6.2.8 |
| | 87 | 0.000 | EK11 | 0.33 | ≤ 1 | CS161) | Cross-section check - Biaxial bending and shear force acc. to 6.2.6, 6.2.7 and 6.2.9 |
| | 167 | 2.431 | EK11 | 0.47 | ≤ 1 | CS181) | Cross-section check - Bending, shear and axial force acc. to 6.2.9.1 |
| | 87 | 3.735 | EK11 | 0.07 | ≤ 1 | CS201) | Cross-section check - Bending about z-axis, shear and axial force acc. to 6.2.9.1 |
| | 87 | 0.000 | EK11 | 0.42 | ≤ 1 | CS221) | Cross-section check - Biaxial bending, shear and axial force acc. to 6.2.10 and 6.2.9 |
| | 346 | 0.000 | EK11 | 0.08 | ≤ 1 | ST301) | Stability analysis - Flexural buckling about y-axis acc. to 6.3.1.1 and 6.3.1.2(4) |
| | 346 | 0.000 | EK11 | 0.08 | ≤ 1 | ST311) | Stability analysis - Flexural buckling about z-axis acc. to 6.3.1.1 and 6.3.1.2(4) |
| | 346 | 0.000 | EK11 | 0.08 | ≤ 1 | ST321) | Stability analysis - Torsional buckling acc. to 6.3.1.4 and 6.3.1.2(4) |
| | 87 | 0.000 | EK11 | 0.61 | ≤ 1 | ST363) | Stability analysis - Biaxial bending acc. to 6.3.3, Method 2 |
| | 87 | 0.000 | EK11 | 0.88 | ≤ 1 | ST364) | Stability analysis - Bending and compression acc. to 6.3.3, Method 2 |
| 9 | **IPE 200 \| Euronorm 19-57** | | | | | | |
| | 253 | 1.335 | EK11 | 0.00 | ≤ 1 | CS100) | Negligible internal forces |
| | 95 | 2.240 | EK11 | 0.02 | ≤ 1 | CS101) | Cross-section check - Tension acc. to 6.2.3 |
| | 95 | 0.000 | EK11 | 0.02 | ≤ 1 | CS102) | Cross-section check - Compression acc. to 6.2.4 |
| | 93 | 0.000 | EK11 | 0.81 | ≤ 1 | CS111) | Cross-section check - Bending about y-axis acc. to 6.2.5 - Class 1 or 2 |
| | 177 | 0.660 | EK11 | 0.09 | ≤ 1 | CS116) | Cross-section check - Bending about z-axis acc. to 6.2.5 - Class 1 or 2 |
| | 181 | 0.000 | EK11 | 0.14 | ≤ 1 | CS121) | Cross-section check - Shear force in z-axis acc. to 6.2.6 |
| | 177 | 0.000 | EK11 | 0.01 | ≤ 1 | CS123) | Cross-section check - Shear force in y-axis acc. to 6.2.6 |
| | 52 | 0.000 | EK11 | 0.00 | ≤ 1 | CS126) | Cross-section check - Shear buckling acc. to 6.2.6(6) |
| | 93 | 0.000 | EK11 | 0.81 | ≤ 1 | CS141) | Cross-section check - Bending and shear force acc. to 6.2.5 and 6.2.8 |
| | 177 | 0.660 | EK11 | 0.09 | ≤ 1 | CS151) | Cross-section check - Bending about z-axis and shear force acc. to 6.2.5 and 6.2.8 |
| | 93 | 0.000 | EK11 | 0.42 | ≤ 1 | CS161) | Cross-section check - Biaxial bending and shear force acc. to 6.2.6, 6.2.7 and 6.2.9 |
| | 93 | 0.000 | EK11 | 0.75 | ≤ 1 | CS181) | Cross-section check - Bending, shear and axial force acc. to 6.2.9.1 |
| | 177 | 0.660 | EK11 | 0.11 | ≤ 1 | CS201) | Cross-section check - Bending about z-axis, shear and axial force acc. to 6.2.9.1 |
| | 93 | 0.000 | EK11 | 0.65 | ≤ 1 | CS221) | Cross-section check - Biaxial bending, shear and axial force acc. to 6.2.10 and 6.2.9 |
| | 93 | 0.000 | EK11 | 0.80 | ≤ 1 | ST331) | Stability analysis - Lateral torsional buckling acc. to 6.3.2.1 and 6.3.2.3 - I-Section |
| | 93 | 1.568 | EK11 | 0.81 | ≤ 1 | ST363) | Stability analysis - Biaxial bending acc. to 6.3.3, Method 2 |

## 2.2 DESIGN BY CROSS-SECTION

| Sect. No. | Member No. | Location x [m] | LC/CO/ RC | Design | | Equation No. | Description |
|---|---|---|---|---|---|---|---|
| | 94 | 0.000 | EK11 | 0.61 | ≤ 1 | ST364) | Stability analysis - Bending and compression acc. to 6.3.3, Method 2 |
| 10 | **IPE 200 \| Euronorm 19-57** | | | | | | |
| | 172 | 0.713 | EK11 | 0.02 | ≤ 1 | CS101) | Cross-section check - Tension acc. to 6.2.3 |
| | 500 | 0.000 | EK11 | 0.03 | ≤ 1 | CS102) | Cross-section check - Compression acc. to 6.2.4 |
| | 83 | 3.562 | EK11 | 0.42 | ≤ 1 | CS111) | Cross-section check - Bending about y-axis acc. to 6.2.5 - Class 1 or 2 |
| | 51 | 3.562 | EK11 | 0.10 | ≤ 1 | CS116) | Cross-section check - Bending about z-axis acc. to 6.2.5 - Class 1 or 2 |
| | 220 | 0.000 | EK11 | 0.11 | ≤ 1 | CS121) | Cross-section check - Shear force in z-axis acc. to 6.2.6 |
| | 51 | 0.000 | EK11 | 0.01 | ≤ 1 | CS123) | Cross-section check - Shear force in y-axis acc. to 6.2.6 |
| | 29 | 0.000 | EK11 | 0.00 | ≤ 1 | CS126) | Cross-section check - Shear buckling acc. to 6.2.6(6) |
| | 83 | 3.562 | EK11 | 0.42 | ≤ 1 | CS141) | Cross-section check - Bending and shear force acc. to 6.2.5 and 6.2.8 |
| | 51 | 3.562 | EK11 | 0.10 | ≤ 1 | CS151) | Cross-section check - Bending about z-axis and shear force acc. to 6.2.5 and 6.2.8 |
| | 187 | 0.000 | EK11 | 0.26 | ≤ 1 | CS161) | Cross-section check - Biaxial bending and shear force acc. to 6.2.6, 6.2.7 and 6.2.9 |
| | 187 | 0.000 | EK11 | 0.48 | ≤ 1 | CS181) | Cross-section check - Bending, shear and axial force acc. to 6.2.9.1 |
| | 51 | 3.562 | EK11 | 0.11 | ≤ 1 | CS201) | Cross-section check - Bending about z-axis, shear and axial force acc. to 6.2.9.1 |
| | 220 | 0.000 | EK11 | 0.42 | ≤ 1 | CS221) | Cross-section check - Biaxial bending, shear and axial force acc. to 6.2.10 and 6.2.9 |
| | 219 | 0.000 | EK11 | 0.02 | ≤ 1 | ST301) | Stability analysis - Flexural buckling about y-axis acc. to 6.3.1.1 and 6.3.1.2(4) |
| | 219 | 0.000 | EK11 | 0.03 | ≤ 1 | ST311) | Stability analysis - Flexural buckling about z-axis acc. to 6.3.1.1 and 6.3.1.2(4) |
| | 110 | 3.562 | EK11 | 0.08 | ≤ 1 | ST312) | Stability analysis - Flexural buckling about z-axis acc. to 6.3.1.1 and 6.3.1.2 |
| | 110 | 3.562 | EK11 | 0.02 | ≤ 1 | ST321) | Stability analysis - Torsional buckling acc. to 6.3.1.4 and 6.3.1.2(4) |
| | 174 | 2.850 | EK11 | 0.67 | ≤ 1 | ST331) | Stability analysis - Lateral torsional buckling acc. to 6.3.2.1 and 6.3.2.3 - I-Section |
| | 110 | 3.562 | EK11 | 0.72 | ≤ 1 | ST363) | Stability analysis - Biaxial bending acc. to 6.3.3, Method 2 |
| | 110 | 0.356 | EK11 | 0.82 | ≤ 1 | ST364) | Stability analysis - Bending and compression acc. to 6.3.3, Method 2 |
| 11 | **IPE 300 \| Euronorm 19-57** | | | | | | |
| | 316 | 0.712 | EK11 | 0.01 | ≤ 1 | CS101) | Cross-section check - Tension acc. to 6.2.3 |
| | 48 | 1.850 | EK11 | 0.01 | ≤ 1 | CS102) | Cross-section check - Compression acc. to 6.2.4 |
| | 36 | 2.375 | EK11 | 0.75 | ≤ 1 | CS111) | Cross-section check - Bending about y-axis acc. to 6.2.5 - Class 1 or 2 |
| | 150 | 1.425 | EK11 | 0.00 | ≤ 1 | CS112) | Cross-section check - Bending about y-axis acc. to 6.2.5 - Class 3 |
| | 48 | 0.740 | EK11 | 0.01 | ≤ 1 | CS116) | Cross-section check - Bending about z-axis acc. to 6.2.5 - Class 1 or 2 |
| | 48 | 0.740 | EK11 | 0.01 | ≤ 1 | CS117) | Cross-section check - Bending about z-axis acc. to 6.2.5 - Class 3 |
| | 155 | 0.525 | EK11 | 0.23 | ≤ 1 | CS121) | Cross-section check - Shear force in z-axis acc. to 6.2.6 |
| | 316 | 0.712 | EK11 | 0.29 | ≤ 1 | CS122) | Cross-section check - Shear force in z-axis acc. to 6.2.6(4) - Class 3 or 4 |
| | 155 | 0.525 | EK11 | 0.01 | ≤ 1 | CS123) | Cross-section check - Shear force in y-axis acc. to 6.2.6 |
| | 35 | 0.000 | EK11 | 0.00 | ≤ 1 | CS126) | Cross-section check - Shear buckling acc. to 6.2.6(6) |
| | 36 | 2.375 | EK11 | 0.75 | ≤ 1 | CS141) | Cross-section check - Bending and shear force acc. to 6.2.5 and 6.2.8 |
| | 150 | 1.425 | EK11 | 0.00 | ≤ 1 | CS142) | Cross-section check - Bending and shear force acc. to 6.2.9.2 and 6.2.10 - Class 3 |
| | 48 | 0.740 | EK11 | 0.01 | ≤ 1 | CS151) | Cross-section check - Bending about z-axis and shear force acc. to 6.2.5 and 6.2.8 |
| | 48 | 0.740 | EK11 | 0.01 | ≤ 1 | CS152) | Cross-section check - Bending about z-axis and shear force acc. to 6.2.9.2 and 6.2.10 - Class 3 |
| | 144 | 0.000 | EK11 | 0.58 | ≤ 1 | CS161) | Cross-section check - Biaxial bending and shear force acc. to 6.2.6, 6.2.7 and 6.2.9 |
| | 316 | 2.375 | EK11 | 0.78 | ≤ 1 | CS181) | Cross-section check - Bending, shear and axial force acc. to 6.2.9.1 |
| | 141 | 1.187 | EK11 | 0.02 | ≤ 1 | CS182) | Cross-section check - Bending, shear and axial force acc. to 6.2.9.2 - Class 3 |
| | 316 | 0.712 | EK11 | 0.01 | ≤ 1 | CS201) | Cross-section check - Bending about z-axis, shear and axial force acc. to 6.2.9.1 |
| | 48 | 0.555 | EK11 | 0.01 | ≤ 1 | CS202) | Cross-section check - Bending about z-axis, shear and axial force acc. to 6.2.9.2 - Class 3 |
| | 316 | 2.375 | EK11 | 0.73 | ≤ 1 | CS221) | Cross-section check - Biaxial bending, shear and axial force acc. to 6.2.10 and 6.2.9 |
| | 147 | 1.662 | EK11 | 0.03 | ≤ 1 | CS222) | Cross-section check - Biaxial bending, shear and axial force acc. to 6.2.10 and 6.2.9 - Class 3 |
| | 316 | 2.375 | EK11 | 0.85 | ≤ 1 | ST331) | Stability analysis - Lateral torsional buckling acc. to 6.3.2.1 and 6.3.2.3 - I-Section |
| | 316 | 0.712 | EK11 | 0.87 | ≤ 1 | ST363) | Stability analysis - Biaxial bending acc. to 6.3.3, Method 2 |
| 12 | **IPE 240 \| Euronorm 19-57** | | | | | | |
| | 319 | 1.187 | EK11 | 0.02 | ≤ 1 | CS101) | Cross-section check - Tension acc. to 6.2.3 |
| | 50 | 1.850 | EK11 | 0.01 | ≤ 1 | CS102) | Cross-section check - Compression acc. to 6.2.4 |
| | 3 | 2.375 | EK11 | 0.84 | ≤ 1 | CS111) | Cross-section check - Bending about y-axis acc. to 6.2.5 - Class 1 or 2 |
| | 50 | 1.110 | EK11 | 0.07 | ≤ 1 | CS116) | Cross-section check - Bending about z-axis acc. to 6.2.5 - Class 1 or 2 |
| | 338 | 0.000 | EK11 | 0.34 | ≤ 1 | CS121) | Cross-section check - Shear force in z-axis acc. to 6.2.6 |
| | 338 | 0.525 | EK11 | 0.04 | ≤ 1 | CS123) | Cross-section check - Shear force in y-axis acc. to 6.2.6 |
| | 3 | 0.000 | EK11 | 0.00 | ≤ 1 | CS126) | Cross-section check - Shear buckling acc. to 6.2.6(6) |
| | 3 | 2.375 | EK11 | 0.84 | ≤ 1 | CS141) | Cross-section check - Bending and shear force acc. to 6 |

## 2.2 DESIGN BY CROSS-SECTION

| Sect. No. | Member No. | Location x [m] | LC/CO/ RC | Design | | Equation No. | Description |
|---|---|---|---|---|---|---|---|
| | | | | | | | 6.2.5 and 6.2.8 |
| | 50 | 1.110 | EK11 | 0.07 | ≤ 1 | CS151) | Cross-section check - Bending about z-axis and shear force acc. to 6.2.5 and 6.2.8 |
| | 3 | 2.375 | EK11 | 0.91 | ≤ 1 | CS161) | Cross-section check - Biaxial bending and shear force acc. to 6.2.6, 6.2.7 and 6.2.9 |
| | 214 | 0.000 | EK11 | 0.82 | ≤ 1 | CS181) | Cross-section check - Bending, shear and axial force acc. to 6.2.9.1 |
| | 338 | 0.420 | EK11 | 0.12 | ≤ 1 | CS201) | Cross-section check - Bending about z-axis, shear and axial force acc. to 6.2.9.1 |
| | 214 | 0.000 | EK11 | 0.69 | ≤ 1 | CS221) | Cross-section check - Biaxial bending, shear and axial force acc. to 6.2.10 and 6.2.9 |
| | 3 | 2.375 | EK11 | 0.95 | ≤ 1 | ST331) | Stability analysis - Lateral torsional buckling acc. to 6.3.2.1 and 6.3.2.3 - I-Section |
| | 3 | 0.000 | EK11 | 0.95 | ≤ 1 | ST363) | Stability analysis - Biaxial bending acc. to 6.3.3, Method 2 |
| | 214 | 0.000 | EK11 | 0.70 | ≤ 1 | ST364) | Stability analysis - Bending and compression acc. to 6.3.3, Method 2 |
| 13 | **RO 101.6x3 \| EN 10219-2:2006** | | | | | | |
| | 287 | 0.000 | EK11 | 0.05 | ≤ 1 | CS101) | Cross-section check - Tension acc. to 6.2.3 |
| | 287 | 3.563 | EK11 | 0.05 | ≤ 1 | CS102) | Cross-section check - Compression acc. to 6.2.4 |
| | 302 | 5.265 | EK11 | 0.14 | ≤ 1 | CS111) | Cross-section check - Bending about y-axis acc. to 6.2.5 - Class 1 or 2 |
| | 312 | 0.000 | EK11 | 0.01 | ≤ 1 | CS121) | Cross-section check - Shear force in z-axis acc. to 6.2.6 |
| | 302 | 5.265 | EK11 | 0.14 | ≤ 1 | CS141) | Cross-section check - Bending and shear force acc. to 6.2.5 and 6.2.8 |
| | 207 | 0.000 | EK11 | 0.07 | ≤ 1 | CS161) | Cross-section check - Biaxial bending and shear force acc. to 6.2.6, 6.2.7 and 6.2.9 |
| | 297 | 5.265 | EK11 | 0.18 | ≤ 1 | CS181) | Cross-section check - Bending, shear and axial force acc. to 6.2.9.1 |
| | 312 | 4.602 | EK11 | 0.07 | ≤ 1 | CS221) | Cross-section check - Biaxial bending, shear and axial force acc. to 6.2.10 and 6.2.9 |
| | 203 | 3.562 | EK11 | 0.05 | ≤ 1 | ST301) | Stability analysis - Flexural buckling about y-axis acc. to 6.3.1.1 and 6.3.1.2(4) |
| | 284 | 0.000 | EK11 | 0.35 | ≤ 1 | ST302) | Stability analysis - Flexural buckling about y-axis acc. to 6.3.1.1 and 6.3.1.2 |
| | 203 | 3.562 | EK11 | 0.05 | ≤ 1 | ST311) | Stability analysis - Flexural buckling about z-axis acc. to 6.3.1.1 and 6.3.1.2(4) |
| | 284 | 0.000 | EK11 | 0.35 | ≤ 1 | ST312) | Stability analysis - Flexural buckling about z-axis acc. to 6.3.1.1 and 6.3.1.2 |
| | 297 | 5.265 | EK11 | 0.52 | ≤ 1 | ST364) | Stability analysis - Bending and compression acc. to 6.3.3, Method 2 |
| 14 | **IPE 180 \| Euronorm 19-57** | | | | | | |
| | 366 | 0.660 | EK11 | 0.01 | ≤ 1 | CS101) | Cross-section check - Tension acc. to 6.2.3 |
| | 322 | 1.390 | EK11 | 0.01 | ≤ 1 | CS102) | Cross-section check - Compression acc. to 6.2.4 |
| | 337 | 3.056 | EK11 | 0.28 | ≤ 1 | CS111) | Cross-section check - Bending about y-axis acc. to 6.2.5 - Class 1 or 2 |
| | 318 | 3.820 | EK11 | 0.24 | ≤ 1 | CS121) | Cross-section check - Shear force in z-axis acc. to 6.2.6 |
| | 317 | 3.820 | EK11 | 0.00 | ≤ 1 | CS123) | Cross-section check - Shear force in y-axis acc. to 6.2.6 |
| | 317 | 0.000 | EK11 | 0.00 | ≤ 1 | CS126) | Cross-section check - Shear buckling acc. to 6.2.6(6) |
| | 337 | 3.056 | EK11 | 0.28 | ≤ 1 | CS141) | Cross-section check - Bending and shear force acc. to 6.2.5 and 6.2.8 |
| | 317 | 1.910 | EK11 | 0.81 | ≤ 1 | CS161) | Cross-section check - Biaxial bending and shear force acc. to 6.2.6, 6.2.7 and 6.2.9 |
| | 333 | 1.390 | EK11 | 0.22 | ≤ 1 | CS181) | Cross-section check - Bending, shear and axial force acc. to 6.2.9.1 |
| | 317 | 1.910 | EK11 | 0.64 | ≤ 1 | CS221) | Cross-section check - Biaxial bending, shear and axial force acc. to 6.2.10 and 6.2.9 |
| | 323 | 1.910 | EK11 | 1.37 | > 1 | ST331) | Stability analysis - Lateral torsional buckling acc. to 6.3.2.1 and 6.3.2.3 - I-Section |
| | 317 | 0.000 | EK11 | 2.23 | > 1 | ST363) | Stability analysis - Biaxial bending acc. to 6.3.3, Method 2 |
| 15 | **IPE 180 \| Euronorm 19-57** | | | | | | |
| | 157 | 1.747 | EK11 | 0.01 | ≤ 1 | CS101) | Cross-section check - Tension acc. to 6.2.3 |
| | 361 | 0.000 | EK11 | 0.01 | ≤ 1 | CS102) | Cross-section check - Compression acc. to 6.2.4 |
| | 130 | 0.000 | EK11 | 0.42 | ≤ 1 | CS111) | Cross-section check - Bending about y-axis acc. to 6.2.5 - Class 1 or 2 |
| | 362 | 0.000 | EK11 | 0.05 | ≤ 1 | CS116) | Cross-section check - Bending about z-axis acc. to 6.2.5 - Class 1 or 2 |
| | 137 | 0.000 | EK11 | 0.27 | ≤ 1 | CS121) | Cross-section check - Shear force in z-axis acc. to 6.2.6 |
| | 362 | 2.375 | EK11 | 0.01 | ≤ 1 | CS123) | Cross-section check - Shear force in y-axis acc. to 6.2.6 |
| | 73 | 0.000 | EK11 | 0.00 | ≤ 1 | CS126) | Cross-section check - Shear buckling acc. to 6.2.6(6) |
| | 130 | 0.000 | EK11 | 0.42 | ≤ 1 | CS141) | Cross-section check - Bending and shear force acc. to 6.2.5 and 6.2.8 |
| | 362 | 0.000 | EK11 | 0.05 | ≤ 1 | CS151) | Cross-section check - Bending about z-axis and shear force acc. to 6.2.5 and 6.2.8 |
| | 137 | 0.000 | EK11 | 0.39 | ≤ 1 | CS161) | Cross-section check - Biaxial bending and shear force acc. to 6.2.6, 6.2.7 and 6.2.9 |
| | 130 | 0.000 | EK11 | 0.41 | ≤ 1 | CS181) | Cross-section check - Bending, shear and axial force acc. to 6.2.9.1 |
| | 156 | 0.000 | EK11 | 0.06 | ≤ 1 | CS201) | Cross-section check - Bending about z-axis, shear and axial force acc. to 6.2.9.1 |
| | 137 | 0.000 | EK11 | 0.34 | ≤ 1 | CS221) | Cross-section check - Biaxial bending, shear and axial force acc. to 6.2.10 and 6.2.9 |
| | 137 | 0.000 | EK11 | 0.62 | ≤ 1 | ST331) | Stability analysis - Lateral torsional buckling acc. to 6.3.2.1 and 6.3.2.3 - I-Section |
| | 137 | 0.264 | EK11 | 0.58 | ≤ 1 | ST363) | Stability analysis - Biaxial bending acc. to 6.3.3, Method 2 |
| | 156 | 0.000 | EK11 | 0.20 | ≤ 1 | ST364) | Stability analysis - Bending and compression acc. to 6.3.3, Method 2 |
| 16 | **QRO 80x4 \| EN 10219-2:2006** | | | | | | |

## 2.2 DESIGN BY CROSS-SECTION

| Sect. No. | Member No. | Location x [m] | LC/CO/ RC | Design | | Equation No. | Description |
|---|---|---|---|---|---|---|---|
| | 98 | 0.000 | EK11 | 0.00 | ≤ 1 | CS100) | Negligible internal forces |
| | 469 | 0.000 | EK11 | 0.01 | ≤ 1 | CS101) | Cross-section check - Tension acc. to 6.2.3 |
| | 469 | 2.240 | EK11 | 0.02 | ≤ 1 | CS102) | Cross-section check - Compression acc. to 6.2.4 |
| | 496 | 1.393 | EK11 | 0.96 | ≤ 1 | CS111) | Cross-section check - Bending about y-axis acc. to 6.2.5 - Class 1 or 2 |
| | 496 | 0.000 | EK11 | 0.01 | ≤ 1 | CS116) | Cross-section check - Bending about z-axis acc. to 6.2.5 - Class 1 or 2 |
| | 192 | 2.785 | EK11 | 0.18 | ≤ 1 | CS121) | Cross-section check - Shear force in z-axis acc. to 6.2.6 |
| | 189 | 0.000 | EK11 | 0.00 | ≤ 1 | CS126) | Cross-section check - Shear buckling acc. to 6.2.6(6) |
| | 496 | 1.393 | EK11 | 0.96 | ≤ 1 | CS141) | Cross-section check - Bending and shear force acc. to 6.2.5 and 6.2.8 |
| | 496 | 0.000 | EK11 | 0.01 | ≤ 1 | CS151) | Cross-section check - Bending about z-axis and shear force acc. to 6.2.5 and 6.2.8 |
| | 496 | 1.671 | EK11 | 0.93 | ≤ 1 | CS161) | Cross-section check - Biaxial bending and shear force acc. to 6.2.6, 6.2.7 and 6.2.9 |
| | 496 | 1.781 | EK11 | 0.55 | ≤ 1 | CS181) | Cross-section check - Bending, shear and axial force acc. to 6.2.9.1 |
| | 496 | 2.785 | EK11 | 0.01 | ≤ 1 | CS201) | Cross-section check - Bending about z-axis, shear and axial force acc. to 6.2.9.1 |
| | 189 | 2.228 | EK11 | 0.49 | ≤ 1 | CS221) | Cross-section check - Biaxial bending, shear and axial force acc. to 6.2.10 and 6.2.9 |
| | 469 | 2.240 | EK11 | 0.03 | ≤ 1 | ST301) | Stability analysis - Flexural buckling about y-axis acc. to 6.3.1.1 and 6.3.1.2(4) |
| | 469 | 2.240 | EK11 | 0.03 | ≤ 1 | ST311) | Stability analysis - Flexural buckling about z-axis acc. to 6.3.1.1 and 6.3.1.2(4) |
| | 469 | 2.016 | EK11 | 0.04 | ≤ 1 | ST364) | Stability analysis - Bending and compression acc. to 6.3.3, Method 2 |
| 18 | **QRO 80x4 \| EN 10219-2:2006** | | | | | | |
| | 504 | 0.108 | EK11 | 0.00 | ≤ 1 | CS100) | Negligible internal forces |
| | 498 | 0.270 | EK11 | 0.08 | ≤ 1 | CS101) | Cross-section check - Tension acc. to 6.2.3 |
| | 493 | 1.390 | EK11 | 0.23 | ≤ 1 | CS102) | Cross-section check - Compression acc. to 6.2.4 |
| | 222 | 1.781 | EK11 | 0.20 | ≤ 1 | CS111) | Cross-section check - Bending about y-axis acc. to 6.2.5 - Class 1 or 2 |
| | 506 | 0.000 | EK11 | 0.12 | ≤ 1 | CS116) | Cross-section check - Bending about z-axis acc. to 6.2.5 - Class 1 or 2 |
| | 72 | 0.000 | EK11 | 0.02 | ≤ 1 | CS121) | Cross-section check - Shear force in z-axis acc. to 6.2.6 |
| | 506 | 0.000 | EK11 | 0.07 | ≤ 1 | CS123) | Cross-section check - Shear force in y-axis acc. to 6.2.6 |
| | 72 | 0.000 | EK11 | 0.00 | ≤ 1 | CS126) | Cross-section check - Shear buckling acc. to 6.2.6(6) |
| | 222 | 1.781 | EK11 | 0.20 | ≤ 1 | CS141) | Cross-section check - Bending and shear force acc. to 6.2.5 and 6.2.8 |
| | 506 | 0.000 | EK11 | 0.12 | ≤ 1 | CS151) | Cross-section check - Bending about z-axis and shear force acc. to 6.2.5 and 6.2.8 |
| | 212 | 1.781 | EK11 | 0.25 | ≤ 1 | CS161) | Cross-section check - Biaxial bending and shear force acc. to 6.2.6, 6.2.7 and 6.2.9 |
| | 72 | 1.781 | EK11 | 0.21 | ≤ 1 | CS181) | Cross-section check - Bending, shear and axial force acc. to 6.2.9.1 |
| | 504 | 0.000 | EK11 | 0.20 | ≤ 1 | CS201) | Cross-section check - Bending about z-axis, shear and axial force acc. to 6.2.9.1 |
| | 72 | 1.781 | EK11 | 0.27 | ≤ 1 | CS221) | Cross-section check - Biaxial bending, shear and axial force acc. to 6.2.10 and 6.2.9 |
| | 493 | 2.780 | EK11 | 0.08 | ≤ 1 | ST301) | Stability analysis - Flexural buckling about y-axis acc. to 6.3.1.1 and 6.3.1.2(4) |
| | 493 | 2.780 | EK11 | 0.41 | ≤ 1 | ST302) | Stability analysis - Flexural buckling about y-axis acc. to 6.3.1.1 and 6.3.1.2 |
| | 493 | 2.780 | EK11 | 0.08 | ≤ 1 | ST311) | Stability analysis - Flexural buckling about z-axis acc. to 6.3.1.1 and 6.3.1.2(4) |
| | 493 | 2.780 | EK11 | 0.41 | ≤ 1 | ST312) | Stability analysis - Flexural buckling about z-axis acc. to 6.3.1.1 and 6.3.1.2 |
| | 493 | 1.390 | EK11 | 0.77 | ≤ 1 | ST364) | Stability analysis - Bending and compression acc. to 6.3.3, Method 2 |
| 19 | **QRO 80x4 \| EN 10219-2:2006** | | | | | | |
| | 190 | 1.272 | EK11 | 0.00 | ≤ 1 | CS100) | Negligible internal forces |
| | 209 | 3.210 | EK11 | 0.02 | ≤ 1 | CS101) | Cross-section check - Tension acc. to 6.2.3 |
| | 528 | 0.000 | EK11 | 0.19 | ≤ 1 | CS102) | Cross-section check - Compression acc. to 6.2.4 |
| | 218 | 2.247 | EK11 | 0.14 | ≤ 1 | CS111) | Cross-section check - Bending about y-axis acc. to 6.2.5 - Class 1 or 2 |
| | 209 | 0.321 | EK11 | 0.01 | ≤ 1 | CS116) | Cross-section check - Bending about z-axis acc. to 6.2.5 - Class 1 or 2 |
| | 218 | 1.605 | EK11 | 0.02 | ≤ 1 | CS121) | Cross-section check - Shear force in z-axis acc. to 6.2.6 |
| | 218 | 1.926 | EK11 | 0.03 | ≤ 1 | CS123) | Cross-section check - Shear force in y-axis acc. to 6.2.6 |
| | 209 | 0.000 | EK11 | 0.00 | ≤ 1 | CS126) | Cross-section check - Shear buckling acc. to 6.2.6(6) |
| | 218 | 2.247 | EK11 | 0.14 | ≤ 1 | CS141) | Cross-section check - Bending and shear force acc. to 6.2.5 and 6.2.8 |
| | 209 | 0.321 | EK11 | 0.01 | ≤ 1 | CS151) | Cross-section check - Bending about z-axis and shear force acc. to 6.2.5 and 6.2.8 |
| | 218 | 0.000 | EK11 | 0.32 | ≤ 1 | CS161) | Cross-section check - Biaxial bending and shear force acc. to 6.2.6, 6.2.7 and 6.2.9 |
| | 358 | 0.000 | EK11 | 0.15 | ≤ 1 | CS181) | Cross-section check - Bending, shear and axial force acc. to 6.2.9.1 |
| | 293 | 3.366 | EK11 | 0.23 | ≤ 1 | CS201) | Cross-section check - Bending about z-axis, shear and axial force acc. to 6.2.9.1 |
| | 218 | 0.000 | EK11 | 0.47 | ≤ 1 | CS221) | Cross-section check - Biaxial bending, shear and axial force acc. to 6.2.10 and 6.2.9 |
| | 528 | 0.000 | EK11 | 0.10 | ≤ 1 | ST301) | Stability analysis - Flexural buckling about y-axis acc. to 6.3.1.1 and 6.3.1.2(4) |
| | 190 | 0.000 | EK11 | 0.33 | ≤ 1 | ST302) | Stability analysis - Flexural buckling about y-axis acc. to 6.3.1.1 and 6.3.1.2 |
| | 528 | 0.000 | EK11 | 0.10 | ≤ 1 | ST311) | Stability analysis - Flexural buckling about z-axis acc. to 6.3.1.1 and 6.3.1.2(4) |
| | 190 | 0.000 | EK11 | 0.33 | ≤ 1 | ST312) | Stability analysis - Flexural buckling about z-axis acc. to 6.3.1.1 and 6.3.1.2 |
| | 293 | 0.000 | EK11 | 0.44 | ≤ 1 | ST364) | Stability analysis - Bending and compression acc. to 6 |

## 2.2 DESIGN BY CROSS-SECTION

| Sect. No. | Member No. | Location x [m] | LC/CO/ RC | Design | | Equation No. | Description |
|---|---|---|---|---|---|---|---|
| | | | | | | | 6.3.3, Method 2 |
| 20 | **IPE 180 \| Euronorm 19-57** | | | | | | |
| | 136 | 0.000 | EK11 | 0.00 | ≤ 1 | CS101) | Cross-section check - Tension acc. to 6.2.3 |
| | 111 | 1.390 | EK11 | 0.01 | ≤ 1 | CS102) | Cross-section check - Compression acc. to 6.2.4 |
| | 114 | 1.910 | EK11 | 0.88 | ≤ 1 | CS111) | Cross-section check - Bending about y-axis acc. to 6.2.5 - Class 1 or 2 |
| | 114 | 3.820 | EK11 | 0.24 | ≤ 1 | CS121) | Cross-section check - Shear force in z-axis acc. to 6.2.6 |
| | 460 | 0.000 | EK11 | 0.02 | ≤ 1 | CS123) | Cross-section check - Shear force in y-axis acc. to 6.2.6 |
| | 107 | 0.000 | EK11 | 0.00 | ≤ 1 | CS126) | Cross-section check - Shear buckling acc. to 6.2.6(6) |
| | 114 | 1.910 | EK11 | 0.88 | ≤ 1 | CS141) | Cross-section check - Bending and shear force acc. to 6.2.5 and 6.2.8 |
| | 108 | 1.910 | EK11 | 0.78 | ≤ 1 | CS161) | Cross-section check - Biaxial bending and shear force acc. to 6.2.6, 6.2.7 and 6.2.9 |
| | 114 | 1.910 | EK11 | 0.78 | ≤ 1 | CS181) | Cross-section check - Bending, shear and axial force acc. to 6.2.9.1 |
| | 108 | 1.910 | EK11 | 0.61 | ≤ 1 | CS221) | Cross-section check - Biaxial bending, shear and axial force acc. to 6.2.10 and 6.2.9 |
| | 114 | 1.910 | EK11 | 2.19 | > 1 | ST331) | Stability analysis - Lateral torsional buckling acc. to 6.3.2.1 and 6.3.2.3 - I-Section |
| | 135 | 0.764 | EK11 | 1.73 | > 1 | ST363) | Stability analysis - Biaxial bending acc. to 6.3.3, Method 2 |
| 21 | **HE B 260 \| Euronorm 53-62** | | | | | | |
| | 15 | 2.340 | EK11 | 0.00 | ≤ 1 | CS100) | Negligible internal forces |
| | 347 | 0.271 | EK11 | 0.07 | ≤ 1 | CS101) | Cross-section check - Tension acc. to 6.2.3 |
| | 68 | 0.000 | EK11 | 0.26 | ≤ 1 | CS102) | Cross-section check - Compression acc. to 6.2.4 |
| | 351 | 0.216 | EK11 | 0.17 | ≤ 1 | CS111) | Cross-section check - Bending about y-axis acc. to 6.2.5 - Class 1 or 2 |
| | 61 | 2.721 | EK11 | 0.03 | ≤ 1 | CS116) | Cross-section check - Bending about z-axis acc. to 6.2.5 - Class 1 or 2 |
| | 345 | 0.270 | EK11 | 0.07 | ≤ 1 | CS121) | Cross-section check - Shear force in z-axis acc. to 6.2.6 |
| | 166 | 1.824 | EK11 | 0.01 | ≤ 1 | CS123) | Cross-section check - Shear force in y-axis acc. to 6.2.6 |
| | 9 | 0.000 | EK11 | 0.00 | ≤ 1 | CS126) | Cross-section check - Shear buckling acc. to 6.2.6(6) |
| | 351 | 0.216 | EK11 | 0.17 | ≤ 1 | CS141) | Cross-section check - Bending and shear force acc. to 6.2.5 and 6.2.8 |
| | 61 | 2.721 | EK11 | 0.03 | ≤ 1 | CS151) | Cross-section check - Bending about z-axis and shear force acc. to 6.2.5 and 6.2.8 |
| | 68 | 0.000 | EK11 | 0.11 | ≤ 1 | CS161) | Cross-section check - Biaxial bending and shear force acc. to 6.2.6, 6.2.7 and 6.2.9 |
| | 63 | 1.118 | EK11 | 0.39 | ≤ 1 | CS181) | Cross-section check - Bending, shear and axial force acc. to 6.2.9.1 |
| | 166 | 0.000 | EK11 | 0.11 | ≤ 1 | CS201) | Cross-section check - Bending about z-axis, shear and axial force acc. to 6.2.9.1 |
| | 63 | 0.000 | EK11 | 0.15 | ≤ 1 | CS221) | Cross-section check - Biaxial bending, shear and axial force acc. to 6.2.10 and 6.2.9 |
| | 14 | 2.600 | EK11 | 0.09 | ≤ 1 | ST301) | Stability analysis - Flexural buckling about y-axis acc. to 6.3.1.1 and 6.3.1.2(4) |
| | 57 | 0.000 | EK11 | 0.08 | ≤ 1 | ST302) | Stability analysis - Flexural buckling about y-axis acc. to 6.3.1.1 and 6.3.1.2 |
| | 14 | 2.600 | EK11 | 0.11 | ≤ 1 | ST311) | Stability analysis - Flexural buckling about z-axis acc. to 6.3.1.1 and 6.3.1.2(4) |
| | 57 | 0.000 | EK11 | 0.19 | ≤ 1 | ST312) | Stability analysis - Flexural buckling about z-axis acc. to 6.3.1.1 and 6.3.1.2 |
| | 14 | 2.600 | EK11 | 0.10 | ≤ 1 | ST321) | Stability analysis - Torsional buckling acc. to 6.3.1.4 and 6.3.1.2(4) |
| | 81 | 0.000 | EK11 | 0.27 | ≤ 1 | ST331) | Stability analysis - Lateral torsional buckling acc. to 6.3.2.1 and 6.3.2.3 - I-Section |
| | 63 | 0.000 | EK11 | 0.28 | ≤ 1 | ST363) | Stability analysis - Biaxial bending acc. to 6.3.3, Method 2 |
| | 59 | 0.000 | EK11 | 0.88 | ≤ 1 | ST364) | Stability analysis - Bending and compression acc. to 6.3.3, Method 2 |
| 22 | **HE A 200 \| Euronorm 53-62** | | | | | | |
| | 122 | 4.980 | EK11 | 0.02 | ≤ 1 | CS101) | Cross-section check - Tension acc. to 6.2.3 |
| | 125 | 0.000 | EK11 | 0.16 | ≤ 1 | CS102) | Cross-section check - Compression acc. to 6.2.4 |
| | 122 | 4.980 | EK11 | 0.08 | ≤ 1 | CS111) | Cross-section check - Bending about y-axis acc. to 6.2.5 - Class 1 or 2 |
| | 139 | 1.992 | EK11 | 0.11 | ≤ 1 | CS116) | Cross-section check - Bending about z-axis acc. to 6.2.5 - Class 1 or 2 |
| | 133 | 2.795 | EK11 | 0.06 | ≤ 1 | CS121) | Cross-section check - Shear force in z-axis acc. to 6.2.6 |
| | 527 | 1.080 | EK11 | 0.04 | ≤ 1 | CS123) | Cross-section check - Shear force in y-axis acc. to 6.2.6 |
| | 122 | 0.000 | EK11 | 0.00 | ≤ 1 | CS126) | Cross-section check - Shear buckling acc. to 6.2.6(6) |
| | 122 | 4.980 | EK11 | 0.08 | ≤ 1 | CS141) | Cross-section check - Bending and shear force acc. to 6.2.5 and 6.2.8 |
| | 139 | 1.992 | EK11 | 0.11 | ≤ 1 | CS151) | Cross-section check - Bending about z-axis and shear force acc. to 6.2.5 and 6.2.8 |
| | 176 | 0.762 | EK11 | 0.20 | ≤ 1 | CS161) | Cross-section check - Biaxial bending and shear force acc. to 6.2.6, 6.2.7 and 6.2.9 |
| | 133 | 0.000 | EK11 | 0.37 | ≤ 1 | CS181) | Cross-section check - Bending, shear and axial force acc. to 6.2.9.1 |
| | 173 | 0.000 | EK11 | 0.36 | ≤ 1 | CS201) | Cross-section check - Bending about z-axis, shear and axial force acc. to 6.2.9.1 |
| | 131 | 5.590 | EK11 | 0.51 | ≤ 1 | CS221) | Cross-section check - Biaxial bending, shear and axial force acc. to 6.2.10 and 6.2.9 |
| | 178 | 3.808 | EK11 | 0.04 | ≤ 1 | ST301) | Stability analysis - Flexural buckling about y-axis acc. to 6.3.1.1 and 6.3.1.2(4) |
| | 178 | 3.808 | EK11 | 0.07 | ≤ 1 | ST311) | Stability analysis - Flexural buckling about z-axis acc. to 6.3.1.1 and 6.3.1.2(4) |
| | 178 | 3.808 | EK11 | 0.05 | ≤ 1 | ST321) | Stability analysis - Torsional buckling acc. to 6.3.1.4 and 6.3.1.2(4) |
| | 179 | 0.000 | EK11 | 0.13 | ≤ 1 | ST331) | Stability analysis - Lateral torsional buckling acc. to 6.3.2.1 and 6.3.2.3 - I-Section |
| | 176 | 0.000 | EK11 | 0.32 | ≤ 1 | ST363) | Stability analysis - Biaxial bending acc. to 6.3.3, Method 2 |

## 2.2 DESIGN BY CROSS-SECTION

| Sect. No. | Member No. | Location x [m] | LC/CO/ RC | Design | | Equation No. | Description |
|---|---|---|---|---|---|---|---|
| | | | | | | | 2 |
| | 131 | 0.000 | EK11 | 0.74 | ≤ 1 | ST364) | Stability analysis - Bending and compression acc. to 6.3.3, Method 2 |
| 23 | **HE A 200 \| Euronorm 53-62** | | | | | | |
| | 55 | 3.560 | EK11 | 0.00 | ≤ 1 | CS100) | Negligible internal forces |
| | 56 | 8.900 | EK11 | 0.19 | ≤ 1 | CS101) | Cross-section check - Tension acc. to 6.2.3 |
| | 56 | 0.000 | EK11 | 0.02 | ≤ 1 | CS102) | Cross-section check - Compression acc. to 6.2.4 |
| | 60 | 3.337 | EK11 | 0.00 | ≤ 1 | CS111) | Cross-section check - Bending about y-axis acc. to 6.2.5 - Class 1 or 2 |
| | 56 | 8.900 | EK11 | 0.00 | ≤ 1 | CS121) | Cross-section check - Shear force in z-axis acc. to 6.2.6 |
| | 54 | 7.120 | EK11 | 0.00 | ≤ 1 | CS126) | Cross-section check - Shear buckling acc. to 6.2.6(6) |
| | 60 | 3.337 | EK11 | 0.00 | ≤ 1 | CS141) | Cross-section check - Bending and shear force acc. to 6.2.5 and 6.2.8 |
| | 55 | 8.900 | EK11 | 0.01 | ≤ 1 | CS161) | Cross-section check - Biaxial bending and shear force acc. to 6.2.6, 6.2.7 and 6.2.9 |
| | 60 | 8.900 | EK11 | 0.20 | ≤ 1 | CS181) | Cross-section check - Bending, shear and axial force acc. to 6.2.9.1 |
| | 60 | 8.900 | EK11 | 0.03 | ≤ 1 | CS201) | Cross-section check - Bending about z-axis, shear and axial force acc. to 6.2.9.1 |
| | 60 | 8.900 | EK11 | 0.04 | ≤ 1 | CS221) | Cross-section check - Biaxial bending, shear and axial force acc. to 6.2.10 and 6.2.9 |
| | 54 | 0.000 | EK11 | 0.05 | ≤ 1 | ST301) | Stability analysis - Flexural buckling about y-axis acc. to 6.3.1.1 and 6.3.1.2(4) |
| | 56 | 0.000 | EK11 | 0.06 | ≤ 1 | ST302) | Stability analysis - Flexural buckling about y-axis acc. to 6.3.1.1 and 6.3.1.2 |
| | 56 | 0.000 | EK11 | 0.14 | ≤ 1 | ST312) | Stability analysis - Flexural buckling about z-axis acc. to 6.3.1.1 and 6.3.1.2 |
| | 56 | 0.000 | EK11 | 0.04 | ≤ 1 | ST321) | Stability analysis - Torsional buckling acc. to 6.3.1.4 and 6.3.1.2(4) |
| | 56 | 8.900 | EK11 | 0.02 | ≤ 1 | ST331) | Stability analysis - Lateral torsional buckling acc. to 6.3.2.1 and 6.3.2.3 - I-Section |
| | 56 | 8.900 | EK11 | 0.06 | ≤ 1 | ST363) | Stability analysis - Biaxial bending acc. to 6.3.3, Method 2 |
| | 56 | 0.890 | EK11 | 0.19 | ≤ 1 | ST364) | Stability analysis - Bending and compression acc. to 6.3.3, Method 2 |
| 24 | **RO 101.6x3 \| EN 10219-2:2006** | | | | | | |
| | 508 | 4.522 | EK11 | 0.00 | ≤ 1 | CS100) | Negligible internal forces |
| | 510 | 5.559 | EK11 | 0.06 | ≤ 1 | CS101) | Cross-section check - Tension acc. to 6.2.3 |
| | 509 | 0.000 | EK11 | 0.06 | ≤ 1 | CS102) | Cross-section check - Compression acc. to 6.2.4 |
| | 516 | 3.372 | EK11 | 0.05 | ≤ 1 | CS111) | Cross-section check - Bending about y-axis acc. to 6.2.5 - Class 1 or 2 |
| | 509 | 0.000 | EK11 | 0.00 | ≤ 1 | CS121) | Cross-section check - Shear force in z-axis acc. to 6.2.6 |
| | 516 | 3.372 | EK11 | 0.05 | ≤ 1 | CS141) | Cross-section check - Bending and shear force acc. to 6.2.5 and 6.2.8 |
| | 509 | 2.780 | EK11 | 0.06 | ≤ 1 | CS181) | Cross-section check - Bending, shear and axial force acc. to 6.2.9.1 |
| | 508 | 4.522 | EK11 | 0.04 | ≤ 1 | ST301) | Stability analysis - Flexural buckling about y-axis acc. to 6.3.1.1 and 6.3.1.2(4) |
| | 509 | 0.000 | EK11 | 0.33 | ≤ 1 | ST302) | Stability analysis - Flexural buckling about y-axis acc. to 6.3.1.1 and 6.3.1.2 |
| | 508 | 4.522 | EK11 | 0.04 | ≤ 1 | ST311) | Stability analysis - Flexural buckling about z-axis acc. to 6.3.1.1 and 6.3.1.2(4) |
| | 509 | 0.000 | EK11 | 0.33 | ≤ 1 | ST312) | Stability analysis - Flexural buckling about z-axis acc. to 6.3.1.1 and 6.3.1.2 |
| | 509 | 1.112 | EK11 | 0.39 | ≤ 1 | ST364) | Stability analysis - Bending and compression acc. to 6.3.3, Method 2 |
| 25 | **RO 76.1x3 \| EN 10219-2:2006** | | | | | | |
| | 487 | 0.000 | EK11 | 0.00 | ≤ 1 | CS100) | Negligible internal forces |
| | 483 | 0.000 | EK11 | 0.10 | ≤ 1 | CS101) | Cross-section check - Tension acc. to 6.2.3 |
| | 522 | 4.522 | EK11 | 0.12 | ≤ 1 | CS102) | Cross-section check - Compression acc. to 6.2.4 |
| | 518 | 2.261 | EK11 | 0.05 | ≤ 1 | CS111) | Cross-section check - Bending about y-axis acc. to 6.2.5 - Class 1 or 2 |
| | 522 | 4.522 | EK11 | 0.00 | ≤ 1 | CS121) | Cross-section check - Shear force in z-axis acc. to 6.2.6 |
| | 518 | 2.261 | EK11 | 0.05 | ≤ 1 | CS141) | Cross-section check - Bending and shear force acc. to 6.2.5 and 6.2.8 |
| | 522 | 2.261 | EK11 | 0.11 | ≤ 1 | CS181) | Cross-section check - Bending, shear and axial force acc. to 6.2.9.1 |
| | 480 | 0.000 | EK11 | 0.05 | ≤ 1 | ST301) | Stability analysis - Flexural buckling about y-axis acc. to 6.3.1.1 and 6.3.1.2(4) |
| | 522 | 4.522 | EK11 | 0.51 | ≤ 1 | ST302) | Stability analysis - Flexural buckling about y-axis acc. to 6.3.1.1 and 6.3.1.2 |
| | 480 | 0.000 | EK11 | 0.05 | ≤ 1 | ST311) | Stability analysis - Flexural buckling about z-axis acc. to 6.3.1.1 and 6.3.1.2(4) |
| | 522 | 4.522 | EK11 | 0.51 | ≤ 1 | ST312) | Stability analysis - Flexural buckling about z-axis acc. to 6.3.1.1 and 6.3.1.2 |
| | 522 | 4.522 | EK11 | 0.63 | ≤ 1 | ST364) | Stability analysis - Bending and compression acc. to 6.3.3, Method 2 |
| 26 | **QRO 120x5 \| EN 10219-2:2006** | | | | | | |
| | 233 | 3.140 | EK11 | 0.02 | ≤ 1 | CS101) | Cross-section check - Tension acc. to 6.2.3 |
| | 233 | 0.000 | EK11 | 0.02 | ≤ 1 | CS102) | Cross-section check - Compression acc. to 6.2.4 |
| | 233 | 1.570 | EK11 | 0.07 | ≤ 1 | CS111) | Cross-section check - Bending about y-axis acc. to 6.2.5 - Class 1 or 2 |
| | 282 | 0.615 | EK11 | 0.10 | ≤ 1 | CS121) | Cross-section check - Shear force in z-axis acc. to 6.2.6 |
| | 282 | 0.000 | EK11 | 0.05 | ≤ 1 | CS123) | Cross-section check - Shear force in y-axis acc. to 6.2.6 |
| | 233 | 0.000 | EK11 | 0.00 | ≤ 1 | CS126) | Cross-section check - Shear buckling acc. to 6.2.6(6) |
| | 233 | 1.570 | EK11 | 0.07 | ≤ 1 | CS141) | Cross-section check - Bending and shear force acc. to 6.2.5 and 6.2.8 |
| | 282 | 0.000 | EK11 | 0.30 | ≤ 1 | CS161) | Cross-section check - Biaxial bending and shear force acc. to 6.2.6, 6.2.7 and 6.2.9 |
| | 282 | 0.000 | EK11 | 0.32 | ≤ 1 | CS181) | Cross-section check - Bending, shear and axial force a |

## 2.2 DESIGN BY CROSS-SECTION

| Sect. No. | Member No. | Location x [m] | LC/CO/ RC | Design | | Equation No. | Description |
|---|---|---|---|---|---|---|---|
| | | | | | | | acc. to 6.2.9.1 |
| | 282 | 0.000 | EK11 | 0.31 | ≤ 1 | CS221) | Cross-section check - Biaxial bending, shear and axial force acc. to 6.2.10 and 6.2.9 |
| | 233 | 0.000 | EK11 | 0.01 | ≤ 1 | ST301) | Stability analysis - Flexural buckling about y-axis acc. to 6.3.1.1 and 6.3.1.2(4) |
| | 233 | 0.000 | EK11 | 0.01 | ≤ 1 | ST311) | Stability analysis - Flexural buckling about z-axis acc. to 6.3.1.1 and 6.3.1.2(4) |
| | 233 | 0.000 | EK11 | 0.16 | ≤ 1 | ST364) | Stability analysis - Bending and compression acc. to 6.3.3, Method 2 |
| 27 | **IF HE A 240-20 \| ArcelorMittal (EN 10365:2017)** | | | | | | |
| | 342 | 0.615 | EK11 | 0.07 | ≤ 1 | CS101) | Cross-section check - Tension acc. to 6.2.3 |
| | 342 | 0.000 | EK11 | 0.03 | ≤ 1 | CS102) | Cross-section check - Compression acc. to 6.2.4 |
| | 342 | 0.000 | EK11 | 0.03 | ≤ 1 | CS112) | Cross-section check - Bending about y-axis acc. to 6.2.5 - Class 3 |
| | 342 | 0.123 | EK11 | 0.01 | ≤ 1 | CS117) | Cross-section check - Bending about z-axis acc. to 6.2.5 - Class 3 |
| | 342 | 0.000 | EK11 | 0.01 | ≤ 1 | CS122) | Cross-section check - Shear force in z-axis acc. to 6.2.6(4) - Class 3 or 4 |
| | 342 | 0.000 | EK11 | 0.47 | ≤ 1 | CS124) | Cross-section check - Shear force in y-axis acc. to 6.2.6(4) - Class 3 or 4 |
| | 342 | 0.000 | EK11 | 0.03 | ≤ 1 | CS143) | Cross-section check - Bending and shear force acc. to 6.2.9.2 and 6.2.10 - Class 3 - General cross-section |
| | 342 | 0.123 | EK11 | 0.01 | ≤ 1 | CS153) | Cross-section check - Bending about z-axis and shear force acc. to 6.2.9.2 and 6.2.10 - Class 3 - General cross-section |
| | 342 | 0.615 | EK11 | 0.06 | ≤ 1 | CS163) | Cross-section check - Biaxial bending and shear force acc. to 6.2.9.2 and 6.2.10 - Class 3 - General cross-section |
| | 342 | 0.492 | EK11 | 0.08 | ≤ 1 | CS183) | Cross-section check - Bending, shear and axial force acc. to 6.2.9.2 - Class 3 - General cross-section |
| | 342 | 0.000 | EK11 | 0.60 | ≤ 1 | CS203) | Cross-section check - Bending about z-axis, shear and axial force acc. to 6.2.9.2 - Class 3 - General cross-section |
| | 342 | 0.000 | EK11 | 0.76 | ≤ 1 | CS223) | Cross-section check - Biaxial bending, shear and axial force acc. to 6.2.10 and 6.2.9 - Class 3 - General cross-section |
| | 342 | 0.000 | EK11 | 0.24 | ≤ 1 | ST354) | Stability analysis - Bending and compression acc. to 6.3.3, Method 1 |

# GLAVNI STREŠNI NOSILCI- DIMENZIONIRANJE NA OVOJNICO MSN

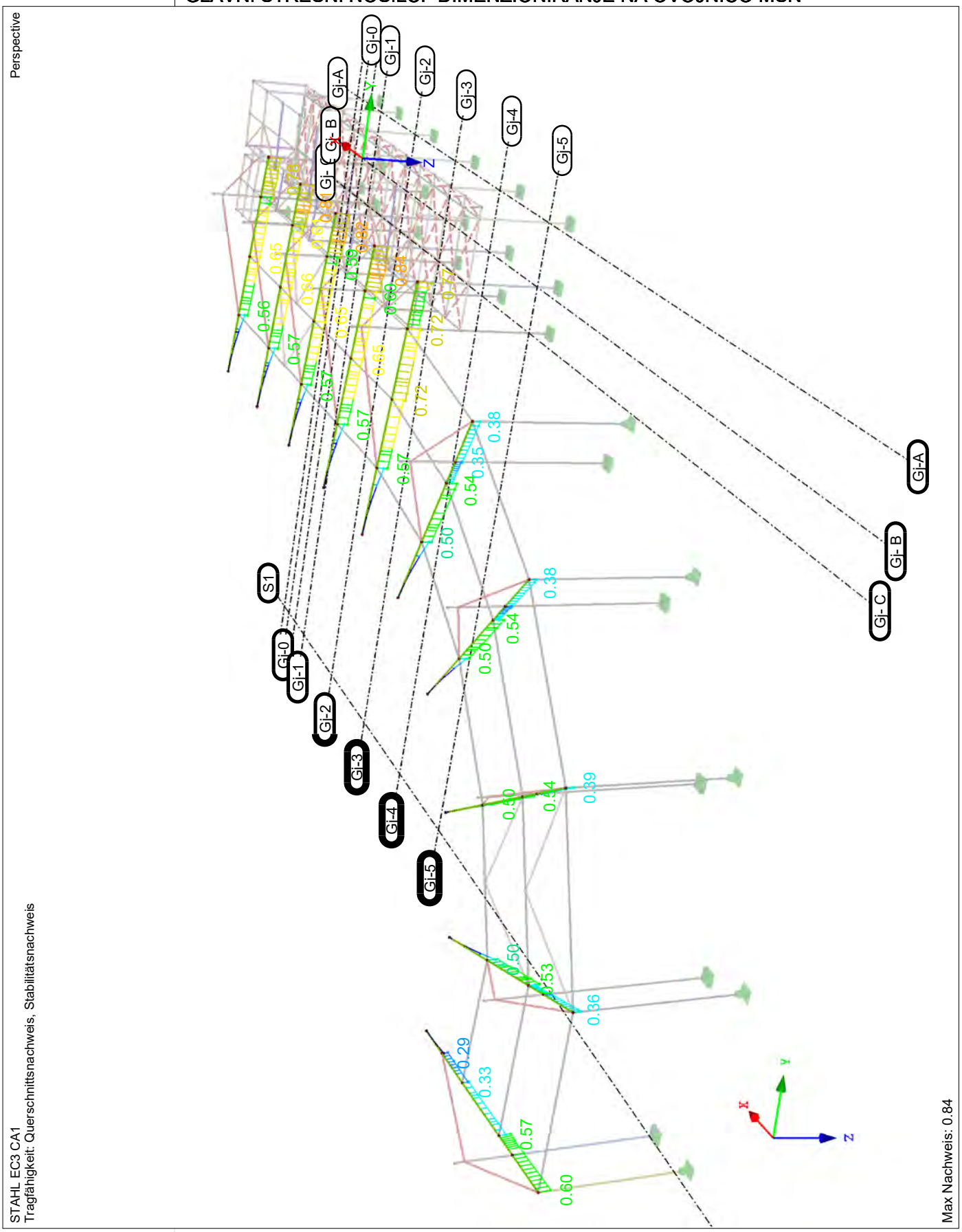

# GLAVNI STEBRI KONSTRUKCIJE - DIMENZIONIRANJE NA OVOJNICO MSN

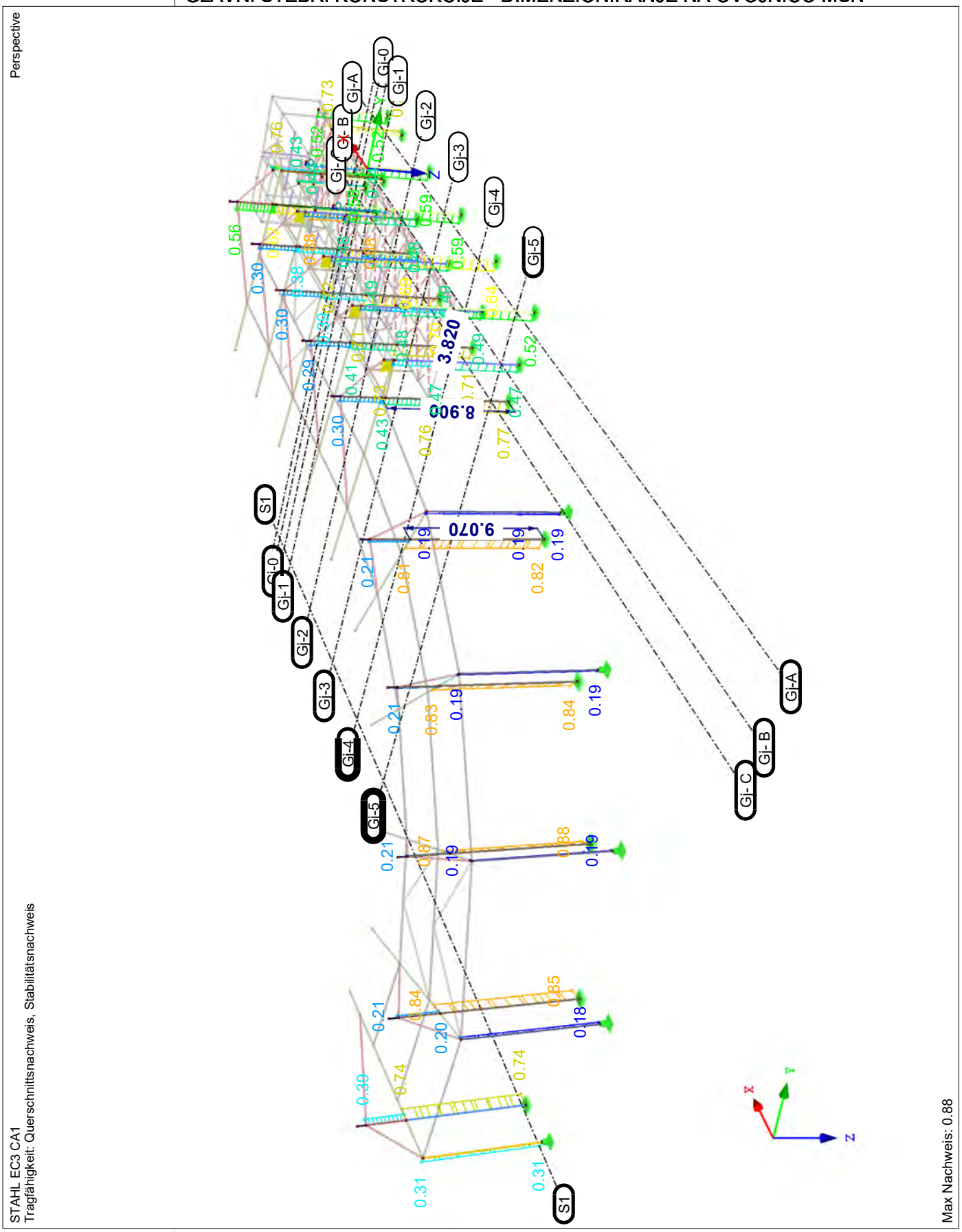

# STREŠNI IN ETAŽNI NOSILCI OBJETA - DIMENZIONIRANJE NA OVONICO MSN

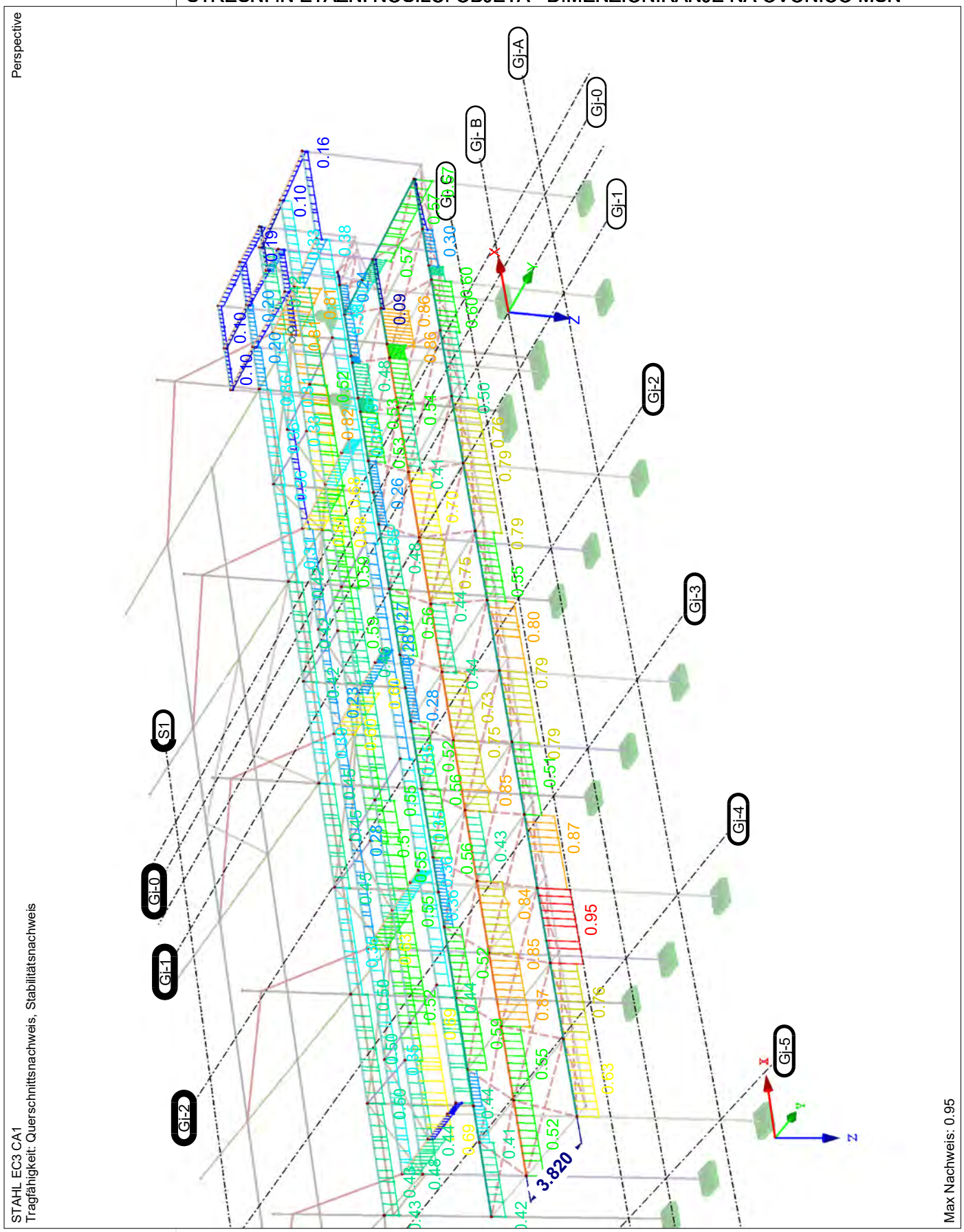

# GLAVNE NOSILNE NATEZNO TLACNE DIAGONALE- DIMENZIONIRANJE NA MSN

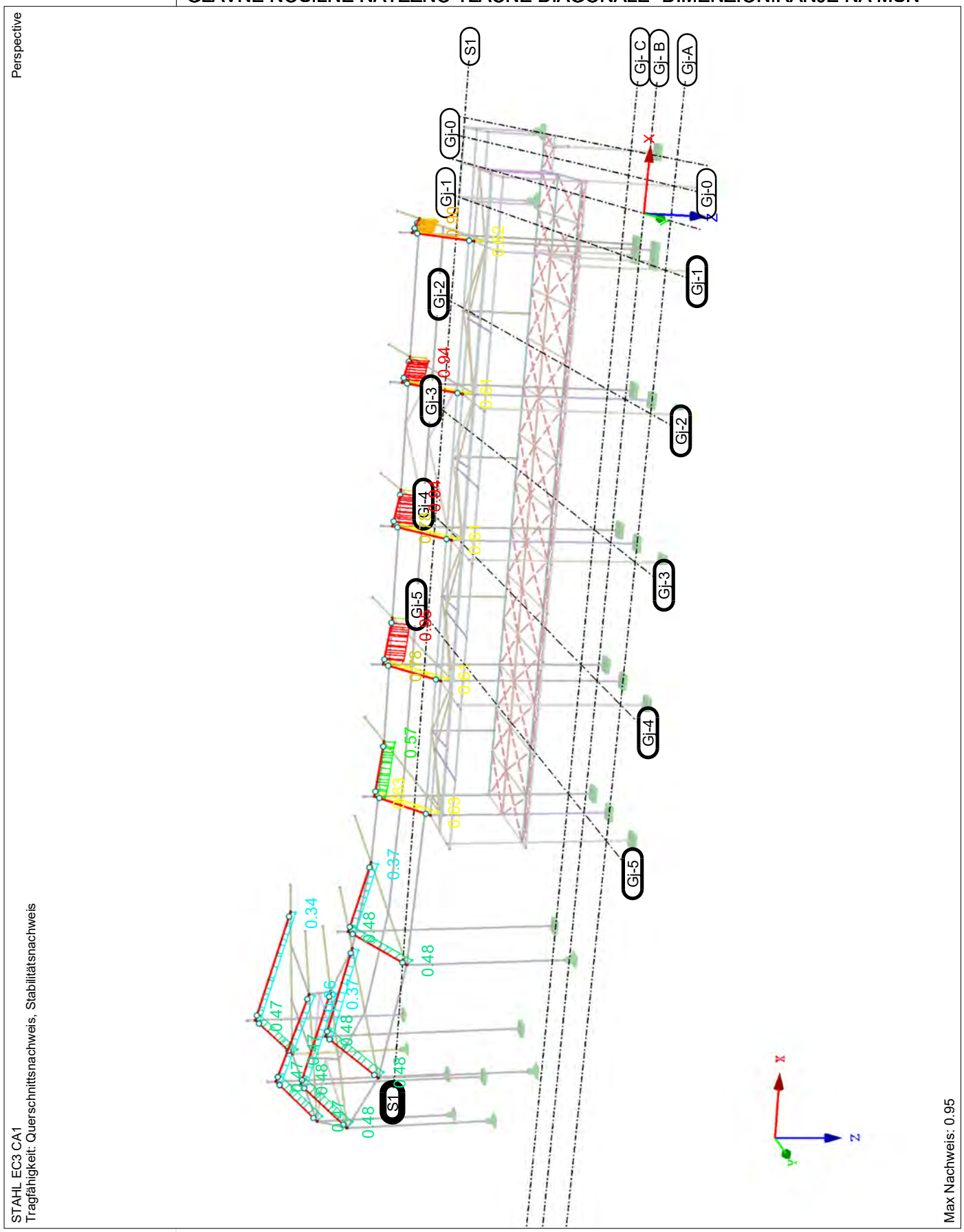

# STREŠNE VEZI IN TLACNE POVEZAVE- DIMENZIONIRANJE NA MSN

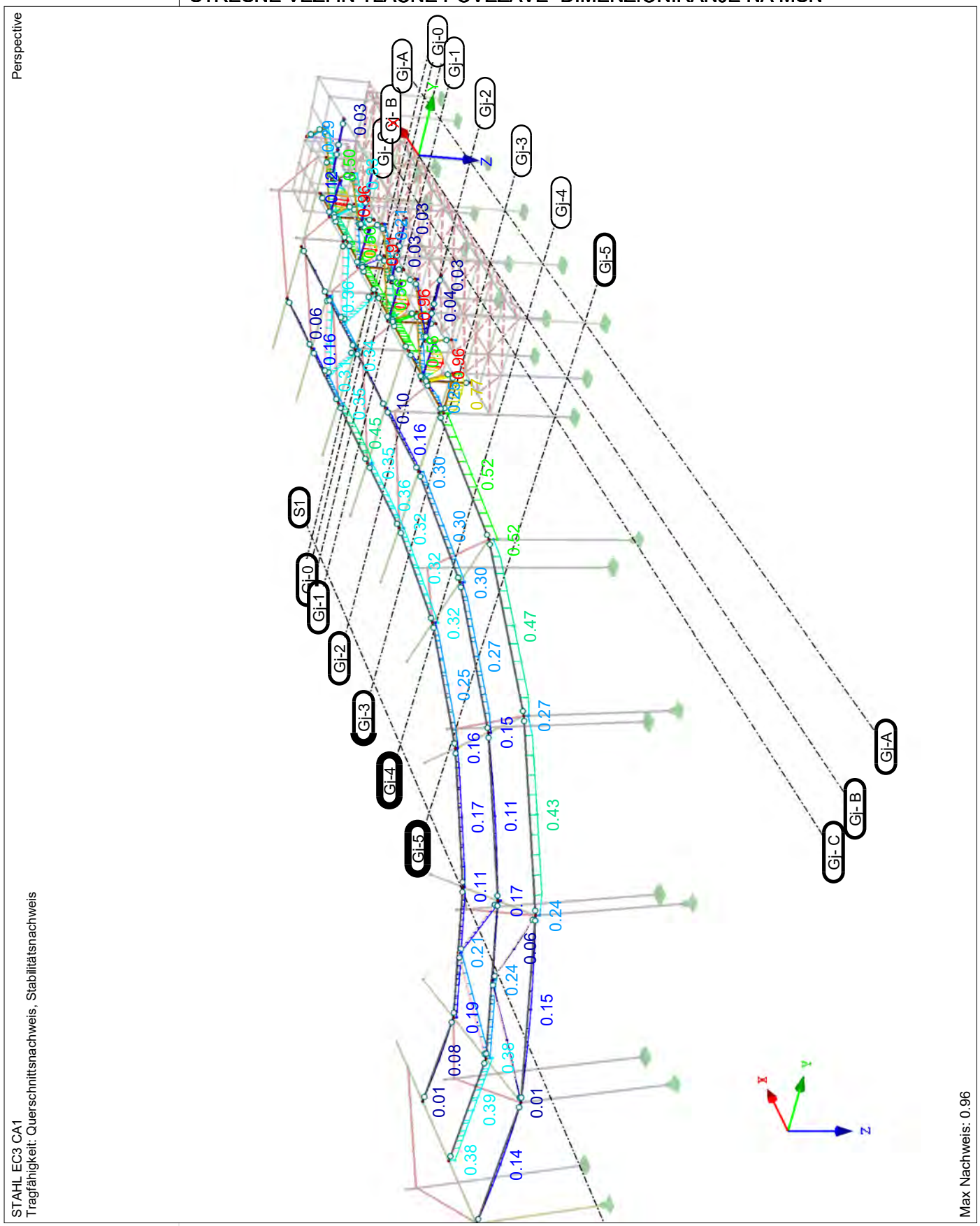

# SEKUNDARNI IN FASADNI STEBRI - DIMENZIONIRANJE NA OVOJNICO MSN

STAHL EC3 CA1
Tragfähigkeit: Querschnittsnachweis, Stabilitätsnachweis

Perspective

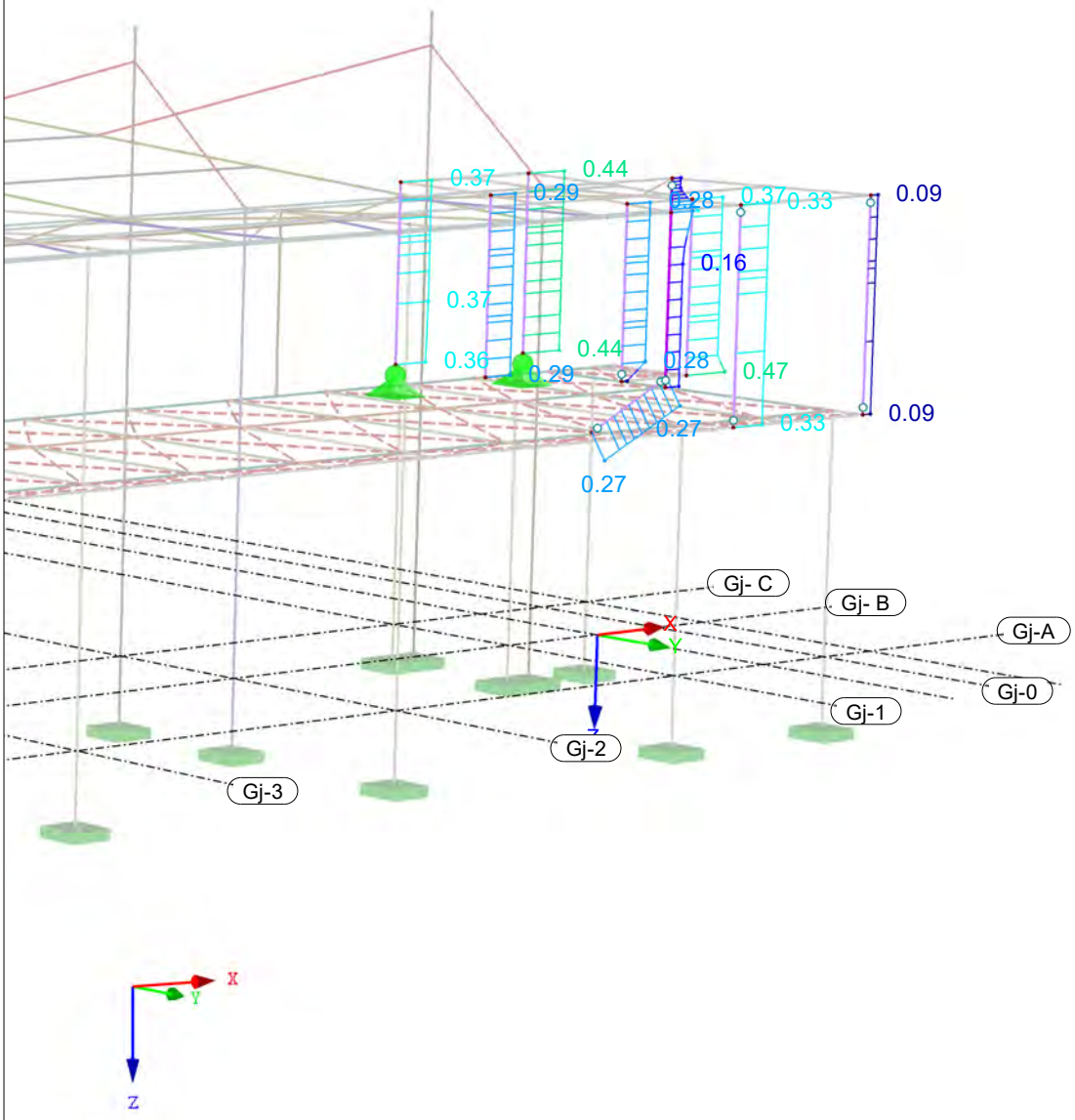


Max Nachweis: 0.47

**STEEL EC3**
CA2
Bemessung nach Eurocode
3- Potres

## 1.1 GENERAL DATA

| | | |
|---|---|---|
| Members to design: | All | |
| Sets of members to design: | | |
| National Annex: | SIST | |
| Ultimate Limit State Design<br>Result combinations to design: | RC10 | GZT (EQU) - Erdbeben |

## 1.2 MATERIALS

| Matl. No. | Material Description | E- Modulus E [kN/cm²] | Shear Modulus G [kN/cm²] | Poisson's Ratio ν [-] | Yield Stress $f_{yk}$ [kN/cm²] | Max. Thickness t [mm] |
|---|---|---|---|---|---|---|
| 1 | Baustahl S 235 \| EN 1993-1-1:2005-05 | 21000.00 | 8076.92 | 0.300 | 23.50 | 40.0 |
| | | | | | 21.50 | 80.0 |
| | | | | | 21.50 | 100.0 |
| | | | | | 19.50 | 150.0 |
| | | | | | 18.50 | 200.0 |
| | | | | | 17.50 | 250.0 |
| | | | | | 16.50 | 400.0 |
| 2 | Baustahl S 355 \| EN 1993-1-1:2005-05 | 21000.00 | 8076.92 | 0.300 | 35.50 | 40.0 |
| | | | | | 33.50 | 80.0 |
| | | | | | 31.50 | 100.0 |
| | | | | | 29.50 | 150.0 |
| | | | | | 28.50 | 200.0 |
| | | | | | 27.50 | 250.0 |

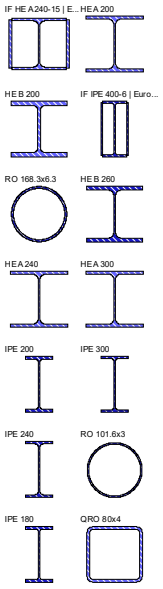


## 1.3 CROSS-SECTIONS

| Sect. No. | Matl. No. | Cross-Section Description | Cross-Section Type | Max Design Ratio | Comment |
|---|---|---|---|---|---|
| 1 | 1 | IF HE A 240-15 \| Euronorm 53-62 | General | 0.58 | |
| | Type General - Only Class 3 and Class 4 possible | | | | |
| 2 | 1 | HE A 200 \| Euronorm 53-62 | I-section rolled | 0.13 | |
| 3 | 1 | HE B 200 \| Euronorm 53-62 | I-section rolled | 0.19 | |
| 4 | 2 | IF IPE 400-6 \| Euronorm 19-57 | General | 0.29 | |
| | Type General - Only Class 3 and Class 4 possible | | | | |
| 5 | 2 | RO 168.3x6.3 \| EN 10219-2:2006 | Pipe | 0.12 | |
| 6 | 2 | HE B 260 \| Euronorm 53-62 | I-section rolled | 0.56 | |
| 7 | 1 | HE A 240 \| Euronorm 53-62 | I-section rolled | 0.86 | |
| 8 | 1 | HE A 300 \| Euronorm 53-62 | I-section rolled | 1.04 | |
| 9 | 2 | IPE 200 \| Euronorm 19-57 | I-section rolled | 0.38 | |
| 10 | 2 | IPE 200 \| Euronorm 19-57 | I-section rolled | 0.57 | |
| 11 | 2 | IPE 300 \| Euronorm 19-57 | I-section rolled | 0.65 | |
| 12 | 2 | IPE 240 \| Euronorm 19-57 | I-section rolled | 0.70 | |
| 13 | 2 | RO 101.6x3 \| EN 10219-2:2006 | Pipe | 0.64 | |
| 14 | 2 | IPE 180 \| Euronorm 19-57 | I-section rolled | 1.33 | |
| 15 | 2 | IPE 180 \| Euronorm 19-57 | I-section rolled | 0.34 | |
| 16 | 1 | QRO 80x4 \| EN 10219-2:2006 | Box rolled | 0.10 | |
| 18 | 1 | QRO 80x4 \| EN 10219-2:2006 | Box rolled | 0.23 | |
| 19 | 1 | QRO 80x4 \| EN 10219-2:2006 | Box rolled | 0.77 | |
| 20 | 2 | IPE 180 \| Euronorm 19-57 | I-section rolled | 1.33 | |
| 21 | 2 | HE B 260 \| Euronorm 53-62 | I-section rolled | 0.58 | |
| 22 | 2 | HE A 200 \| Euronorm 53-62 | I-section rolled | 0.84 | |
| 23 | 2 | HE A 200 \| Euronorm 53-62 | I-section rolled | 0.14 | |
| 24 | 2 | RO 101.6x3 \| EN 10219-2:2006 | Pipe | 0.49 | |
| 25 | 1 | RO 76.1x3 \| EN 10219-2:2006 | Pipe | 0.48 | |
| 26 | 1 | QRO 120x5 \| EN 10219-2:2006 | Box rolled | 0.43 | |
| 27 | 2 | IF HE 240 A-20 \| ArcelorMittal (EN 10365:2017) | General | 0.14 | |
| | Type General - Only Class 3 and Class 4 possible | | | | |

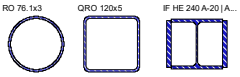


## 1.5 EFFECTIVE LENGTHS - MEMBERS

| Member No. | Buckling Possible | Buckling About Axis y Possible | $k_{cr,y}$ | $L_{cr,y}$ [m] | Buckling About Axis z Possible | $k_{cr,z}$ | $L_{cr,z}$ [m] | Lateral-Torsional Buckling Possible | $k_z$ | $k_w$ | $L_w$ [m] | $L_T$ [m] |
|---|---|---|---|---|---|---|---|---|---|---|---|---|
| 1 | ☒ | ☒ | 1.00 | 7.890 | ☒ | 1.00 | 7.890 | ☒ | 1.0 | 1.0 | 7.890 | 7.890 |
| 2 | ☒ | ☒ | 1.00 | 0.580 | ☒ | 1.00 | 0.580 | ☒ | 1.0 | 1.0 | 0.580 | 0.580 |
| 3 | ☒ | ☒ | 1.00 | 2.375 | ☒ | 1.00 | 2.375 | ☒ | 1.0 | 1.0 | 2.375 | 2.375 |
| 4 | ☒ | ☒ | 1.00 | 2.617 | ☒ | 1.00 | 2.617 | ☒ | 1.0 | 1.0 | 2.617 | 2.617 |
| 5 | ☒ | ☒ | 1.00 | 3.940 | ☒ | 1.00 | 3.940 | ☐ | 1.0 | 1.0 | 3.940 | 3.940 |
| 6 | ☒ | ☒ | 1.00 | 0.580 | ☒ | 1.00 | 0.580 | ☒ | 1.0 | 1.0 | 0.580 | 0.580 |
| 7 | ☒ | ☒ | 1.00 | 2.791 | ☒ | 1.00 | 2.791 | ☐ | 1.0 | 1.0 | 2.791 | 2.791 |
| 8 | ☒ | ☒ | 1.00 | 1.502 | ☒ | 1.00 | 1.502 | ☐ | 1.0 | 1.0 | 1.502 | 1.502 |
| 9 | ☒ | ☒ | 1.00 | 2.770 | ☒ | 1.00 | 2.770 | ☒ | 1.0 | 1.0 | 2.770 | 2.770 |
| 10 | ☒ | ☒ | 1.00 | 0.563 | ☒ | 1.00 | 0.563 | ☒ | 1.0 | 1.0 | 0.563 | 0.563 |
| 11 | ☒ | ☒ | 1.00 | 0.580 | ☒ | 1.00 | 0.580 | ☒ | 1.0 | 1.0 | 0.580 | 0.580 |
| 14 | ☒ | ☒ | 1.00 | 2.600 | ☒ | 1.00 | 2.600 | ☒ | 1.0 | 1.0 | 2.600 | 2.600 |
| 15 | ☒ | ☒ | 1.00 | 2.600 | ☒ | 1.00 | 2.600 | ☒ | 1.0 | 1.0 | 2.600 | 2.600 |
| 16 | ☒ | ☒ | 1.00 | 4.239 | ☒ | 1.00 | 4.239 | ☐ | 1.0 | 1.0 | 4.239 | 4.239 |
| 17 | ☒ | ☒ | 1.00 | 2.600 | ☒ | 1.00 | 2.600 | ☒ | 1.0 | 1.0 | 2.600 | 2.600 |
| 18 | ☒ | ☒ | 1.00 | 4.239 | ☒ | 1.00 | 4.239 | ☐ | 1.0 | 1.0 | 4.239 | 4.239 |
| 19 | ☒ | ☒ | 1.00 | 2.600 | ☒ | 1.00 | 2.600 | ☒ | 1.0 | 1.0 | 2.600 | 2.600 |

## 1.5 EFFECTIVE LENGTHS - MEMBERS

| Member No. | Buckling Possible | Buckling About Axis y | | | Buckling About Axis z | | | Lateral-Torsional Buckling | | | | |
|---|---|---|---|---|---|---|---|---|---|---|---|---|
| | | Possible | $k_{cr,y}$ | $L_{cr,y}$ [m] | Possible | $k_{cr,z}$ | $L_{cr,z}$ [m] | Possible | $k_z$ | $k_w$ | $L_w$ [m] | $L_T$ [m] |
| 20 | ☒ | ☒ | 1.00 | 2.770 | ☒ | 1.00 | 2.770 | ☒ | 1.0 | 1.0 | 2.770 | 2.770 |
| 22 | ☒ | ☒ | 1.00 | 4.268 | ☒ | 1.00 | 4.268 | ☐ | 1.0 | 1.0 | 4.268 | 4.268 |
| 23 | ☒ | ☒ | 1.00 | 2.770 | ☒ | 1.00 | 2.770 | ☒ | 1.0 | 1.0 | 2.770 | 2.770 |
| 24 | ☒ | ☒ | 1.00 | 4.268 | ☒ | 1.00 | 4.268 | ☐ | 1.0 | 1.0 | 4.268 | 4.268 |
| 25 | ☒ | ☒ | 1.00 | 4.268 | ☒ | 1.00 | 4.268 | ☐ | 1.0 | 1.0 | 4.268 | 4.268 |
| 26 | ☒ | ☒ | 1.00 | 0.580 | ☒ | 1.00 | 0.580 | ☒ | 1.0 | 1.0 | 0.580 | 0.580 |
| 27 | ☒ | ☒ | 1.00 | 4.268 | ☒ | 1.00 | 4.268 | ☐ | 1.0 | 1.0 | 4.268 | 4.268 |
| 28 | ☒ | ☒ | 1.00 | 4.239 | ☒ | 1.00 | 4.239 | ☐ | 1.0 | 1.0 | 4.239 | 4.239 |
| 29 | ☒ | ☒ | 1.00 | 1.670 | ☒ | 1.00 | 1.670 | ☒ | 1.0 | 1.0 | 1.670 | 1.670 |
| 30 | ☒ | ☒ | 1.00 | 8.568 | ☒ | 1.00 | 8.568 | ☐ | 1.0 | 1.0 | 8.568 | 8.568 |
| 31 | ☒ | ☒ | 1.00 | 2.375 | ☒ | 1.00 | 2.375 | ☒ | 1.0 | 1.0 | 2.375 | 2.375 |
| 32 | ☒ | ☒ | 1.00 | 2.375 | ☒ | 1.00 | 2.375 | ☒ | 1.0 | 1.0 | 2.375 | 2.375 |
| 33 | ☒ | ☒ | 1.00 | 2.375 | ☒ | 1.00 | 2.375 | ☒ | 1.0 | 1.0 | 2.375 | 2.375 |
| 34 | ☒ | ☒ | 1.00 | 2.770 | ☒ | 1.00 | 2.770 | ☒ | 1.0 | 1.0 | 2.770 | 2.770 |
| 35 | ☒ | ☒ | 1.00 | 2.375 | ☒ | 1.00 | 2.375 | ☒ | 1.0 | 1.0 | 2.375 | 2.375 |
| 36 | ☒ | ☒ | 1.00 | 2.375 | ☒ | 1.00 | 2.375 | ☒ | 1.0 | 1.0 | 2.375 | 2.375 |
| 37 | ☒ | ☒ | 1.00 | 1.188 | ☒ | 1.00 | 1.188 | ☒ | 1.0 | 1.0 | 1.188 | 1.188 |
| 38 | ☒ | ☒ | 1.00 | 2.375 | ☒ | 1.00 | 2.375 | ☒ | 1.0 | 1.0 | 2.375 | 2.375 |
| 39 | ☒ | ☒ | 1.00 | 2.375 | ☒ | 1.00 | 2.375 | ☒ | 1.0 | 1.0 | 2.375 | 2.375 |
| 40 | ☒ | ☒ | 1.00 | 2.375 | ☒ | 1.00 | 2.375 | ☒ | 1.0 | 1.0 | 2.375 | 2.375 |
| 41 | ☒ | ☒ | 1.00 | 2.375 | ☒ | 1.00 | 2.375 | ☒ | 1.0 | 1.0 | 2.375 | 2.375 |
| 42 | ☒ | ☒ | 1.00 | 2.375 | ☒ | 1.00 | 2.375 | ☒ | 1.0 | 1.0 | 2.375 | 2.375 |
| 43 | ☒ | ☒ | 1.00 | 1.187 | ☒ | 1.00 | 1.187 | ☒ | 1.0 | 1.0 | 1.187 | 1.187 |
| 44 | ☒ | ☒ | 1.00 | 2.375 | ☒ | 1.00 | 2.375 | ☒ | 1.0 | 1.0 | 2.375 | 2.375 |
| 45 | ☒ | ☒ | 1.00 | 2.375 | ☒ | 1.00 | 2.375 | ☒ | 1.0 | 1.0 | 2.375 | 2.375 |
| 46 | ☒ | ☒ | 1.00 | 1.850 | ☒ | 1.00 | 1.850 | ☒ | 1.0 | 1.0 | 1.850 | 1.850 |
| 47 | ☒ | ☒ | 1.00 | 2.375 | ☒ | 1.00 | 2.375 | ☒ | 1.0 | 1.0 | 2.375 | 2.375 |
| 48 | ☒ | ☒ | 1.00 | 1.850 | ☒ | 1.00 | 1.850 | ☒ | 1.0 | 1.0 | 1.850 | 1.850 |
| 49 | ☒ | ☒ | 1.00 | 1.188 | ☒ | 1.00 | 1.188 | ☒ | 1.0 | 1.0 | 1.188 | 1.188 |
| 50 | ☒ | ☒ | 1.00 | 1.850 | ☒ | 1.00 | 1.850 | ☒ | 1.0 | 1.0 | 1.850 | 1.850 |
| 51 | ☒ | ☒ | 1.00 | 3.563 | ☒ | 1.00 | 3.563 | ☒ | 1.0 | 1.0 | 3.563 | 3.563 |
| 52 | ☒ | ☒ | 1.00 | 1.580 | ☒ | 1.00 | 1.580 | ☒ | 1.0 | 1.0 | 1.580 | 1.580 |
| 53 | ☒ | ☒ | 1.00 | 1.580 | ☒ | 1.00 | 1.580 | ☒ | 1.0 | 1.0 | 1.580 | 1.580 |
| 54 | ☒ | ☒ | 1.00 | 8.900 | ☒ | 1.00 | 8.900 | ☒ | 1.0 | 1.0 | 8.900 | 8.900 |
| 55 | ☒ | ☒ | 1.00 | 8.900 | ☒ | 1.00 | 8.900 | ☒ | 1.0 | 1.0 | 8.900 | 8.900 |
| 56 | ☒ | ☒ | 1.00 | 8.900 | ☒ | 1.00 | 8.900 | ☒ | 1.0 | 1.0 | 8.900 | 8.900 |
| 57 | ☒ | ☒ | 1.00 | 9.070 | ☒ | 1.00 | 9.070 | ☒ | 1.0 | 1.0 | 9.070 | 9.070 |
| 58 | ☒ | ☒ | 1.00 | 9.070 | ☒ | 1.00 | 9.070 | ☒ | 1.0 | 1.0 | 9.070 | 9.070 |
| 59 | ☒ | ☒ | 1.00 | 9.070 | ☒ | 1.00 | 9.070 | ☒ | 1.0 | 1.0 | 9.070 | 9.070 |
| 60 | ☒ | ☒ | 1.00 | 8.900 | ☒ | 1.00 | 8.900 | ☒ | 1.0 | 1.0 | 8.900 | 8.900 |
| 61 | ☒ | ☒ | 1.00 | 9.070 | ☒ | 1.00 | 9.070 | ☒ | 1.0 | 1.0 | 9.070 | 9.070 |
| 62 | ☒ | ☒ | 1.00 | 5.590 | ☒ | 1.00 | 5.590 | ☒ | 1.0 | 1.0 | 5.590 | 5.590 |
| 63 | ☒ | ☒ | 1.00 | 5.590 | ☒ | 1.00 | 5.590 | ☒ | 1.0 | 1.0 | 5.590 | 5.590 |
| 64 | ☒ | ☒ | 1.00 | 2.770 | ☒ | 1.00 | 2.770 | ☒ | 1.0 | 1.0 | 2.770 | 2.770 |
| 65 | ☒ | ☒ | 1.00 | 2.240 | ☒ | 1.00 | 2.240 | ☒ | 1.0 | 1.0 | 2.240 | 2.240 |
| 66 | ☒ | ☒ | 1.00 | 2.240 | ☒ | 1.00 | 2.240 | ☒ | 1.0 | 1.0 | 2.240 | 2.240 |
| 67 | ☒ | ☒ | 1.00 | 5.590 | ☒ | 1.00 | 5.590 | ☒ | 1.0 | 1.0 | 5.590 | 5.590 |
| 68 | ☒ | ☒ | 1.00 | 5.590 | ☒ | 1.00 | 5.590 | ☒ | 1.0 | 1.0 | 5.590 | 5.590 |
| 69 | ☒ | ☒ | 1.00 | 1.580 | ☒ | 1.00 | 1.580 | ☒ | 1.0 | 1.0 | 1.580 | 1.580 |
| 70 | ☒ | ☒ | 1.00 | 1.580 | ☒ | 1.00 | 1.580 | ☒ | 1.0 | 1.0 | 1.580 | 1.580 |
| 71 | ☒ | ☒ | 1.00 | 2.240 | ☒ | 1.00 | 2.240 | ☒ | 1.0 | 1.0 | 2.240 | 2.240 |
| 72 | ☒ | ☒ | 1.00 | 3.563 | ☒ | 1.00 | 3.563 | ☐ | 1.0 | 1.0 | 3.563 | 3.563 |
| 73 | ☒ | ☒ | 1.00 | 2.375 | ☒ | 1.00 | 2.375 | ☒ | 1.0 | 1.0 | 2.375 | 2.375 |
| 74 | ☒ | ☒ | 1.00 | 5.590 | ☒ | 1.00 | 5.590 | ☒ | 1.0 | 1.0 | 5.590 | 5.590 |
| 75 | ☒ | ☒ | 1.00 | 5.590 | ☒ | 1.00 | 5.590 | ☒ | 1.0 | 1.0 | 5.590 | 5.590 |
| 76 | ☒ | ☒ | 1.00 | 2.375 | ☒ | 1.00 | 2.375 | ☒ | 1.0 | 1.0 | 2.375 | 2.375 |
| 77 | ☒ | ☒ | 1.00 | 2.375 | ☒ | 1.00 | 2.375 | ☒ | 1.0 | 1.0 | 2.375 | 2.375 |
| 78 | ☒ | ☒ | 1.00 | 0.525 | ☒ | 1.00 | 0.525 | ☒ | 1.0 | 1.0 | 0.525 | 0.525 |
| 79 | ☒ | ☒ | 1.00 | 5.590 | ☒ | 1.00 | 5.590 | ☒ | 1.0 | 1.0 | 5.590 | 5.590 |
| 80 | ☒ | ☒ | 1.00 | 3.563 | ☒ | 1.00 | 3.563 | ☒ | 1.0 | 1.0 | 3.563 | 3.563 |
| 81 | ☒ | ☒ | 1.00 | 5.590 | ☒ | 1.00 | 5.590 | ☒ | 1.0 | 1.0 | 5.590 | 5.590 |
| 82 | ☒ | ☒ | 1.00 | 3.562 | ☒ | 1.00 | 3.562 | ☒ | 1.0 | 1.0 | 3.562 | 3.562 |
| 83 | ☒ | ☒ | 1.00 | 3.562 | ☒ | 1.00 | 3.562 | ☒ | 1.0 | 1.0 | 3.562 | 3.562 |
| 84 | ☒ | ☒ | 1.00 | 2.240 | ☒ | 1.00 | 2.240 | ☐ | 1.0 | 1.0 | 2.240 | 2.240 |
| 85 | ☒ | ☒ | 1.00 | 2.240 | ☒ | 1.00 | 2.240 | ☐ | 1.0 | 1.0 | 2.240 | 2.240 |
| 86 | ☒ | ☒ | 1.00 | 4.980 | ☒ | 1.00 | 4.980 | ☒ | 1.0 | 1.0 | 4.980 | 4.980 |
| 87 | ☒ | ☒ | 1.00 | 4.980 | ☒ | 1.00 | 4.980 | ☒ | 1.0 | 1.0 | 4.980 | 4.980 |
| 88 | ☒ | ☒ | 1.00 | 3.563 | ☒ | 1.00 | 3.563 | ☒ | 1.0 | 1.0 | 3.563 | 3.563 |
| 90 | ☒ | ☒ | 1.00 | 3.563 | ☒ | 1.00 | 3.563 | ☒ | 1.0 | 1.0 | 3.563 | 3.563 |
| 91 | ☒ | ☒ | 1.00 | 3.563 | ☒ | 1.00 | 3.563 | ☒ | 1.0 | 1.0 | 3.563 | 3.563 |
| 93 | ☒ | ☒ | 1.00 | 2.240 | ☒ | 1.00 | 2.240 | ☒ | 1.0 | 1.0 | 2.240 | 2.240 |
| 94 | ☒ | ☒ | 1.00 | 2.240 | ☒ | 1.00 | 2.240 | ☒ | 1.0 | 1.0 | 2.240 | 2.240 |
| 95 | ☒ | ☒ | 1.00 | 2.240 | ☒ | 1.00 | 2.240 | ☒ | 1.0 | 1.0 | 2.240 | 2.240 |
| 96 | ☒ | ☒ | 1.00 | 2.240 | ☒ | 1.00 | 2.240 | ☒ | 1.0 | 1.0 | 2.240 | 2.240 |
| 97 | ☒ | ☒ | 1.00 | 2.240 | ☒ | 1.00 | 2.240 | ☒ | 1.0 | 1.0 | 2.240 | 2.240 |
| 98 | ☒ | ☒ | 1.00 | 2.240 | ☒ | 1.00 | 2.240 | ☐ | 1.0 | 1.0 | 2.240 | 2.240 |
| 99 | ☒ | ☒ | 1.00 | 3.563 | ☒ | 1.00 | 3.563 | ☒ | 1.0 | 1.0 | 3.563 | 3.563 |
| 100 | ☒ | ☒ | 1.00 | 2.240 | ☒ | 1.00 | 2.240 | ☐ | 1.0 | 1.0 | 2.240 | 2.240 |
| 101 | ☒ | ☒ | 1.00 | 3.562 | ☒ | 1.00 | 3.562 | ☒ | 1.0 | 1.0 | 3.562 | 3.562 |
| 102 | ☒ | ☒ | 1.00 | 3.563 | ☒ | 1.00 | 3.563 | ☒ | 1.0 | 1.0 | 3.563 | 3.563 |
| 103 | ☒ | ☒ | 1.00 | 3.220 | ☒ | 1.00 | 3.220 | ☒ | 1.0 | 1.0 | 3.220 | 3.220 |
| 104 | ☒ | ☒ | 1.00 | 1.610 | ☒ | 1.00 | 1.610 | ☒ | 1.0 | 1.0 | 1.610 | 1.610 |
| 105 | ☒ | ☒ | 1.00 | 3.563 | ☒ | 1.00 | 3.563 | ☒ | 1.0 | 1.0 | 3.563 | 3.563 |
| 106 | ☒ | ☒ | 1.00 | 3.562 | ☒ | 1.00 | 3.562 | ☒ | 1.0 | 1.0 | 3.562 | 3.562 |
| 107 | ☒ | ☒ | 1.00 | 3.820 | ☒ | 1.00 | 3.820 | ☒ | 1.0 | 1.0 | 3.820 | 3.820 |
| 108 | ☒ | ☒ | 1.00 | 3.820 | ☒ | 1.00 | 3.820 | ☒ | 1.0 | 1.0 | 3.820 | 3.820 |
| 109 | ☒ | ☒ | 1.00 | 3.563 | ☒ | 1.00 | 3.563 | ☐ | 1.0 | 1.0 | 3.563 | 3.563 |
| 110 | ☒ | ☒ | 1.00 | 3.562 | ☒ | 1.00 | 3.562 | ☒ | 1.0 | 1.0 | 3.562 | 3.562 |
| 111 | ☒ | ☒ | 1.00 | 2.780 | ☒ | 1.00 | 2.780 | ☒ | 1.0 | 1.0 | 2.780 | 2.780 |
| 112 | ☒ | ☒ | 1.00 | 3.140 | ☒ | 1.00 | 3.140 | ☒ | 1.0 | 1.0 | 3.140 | 3.140 |
| 113 | ☒ | ☒ | 1.00 | 1.188 | ☒ | 1.00 | 1.188 | ☒ | 1.0 | 1.0 | 1.188 | 1.188 |
| 114 | ☒ | ☒ | 1.00 | 3.820 | ☒ | 1.00 | 3.820 | ☒ | 1.0 | 1.0 | 3.820 | 3.820 |
| 115 | ☒ | ☒ | 1.00 | 2.780 | ☒ | 1.00 | 2.780 | ☒ | 1.0 | 1.0 | 2.780 | 2.780 |
| 116 | ☒ | ☒ | 1.00 | 3.140 | ☒ | 1.00 | 3.140 | ☒ | 1.0 | 1.0 | 3.140 | 3.140 |

## 1.5 EFFECTIVE LENGTHS - MEMBERS

| Member No. | Buckling Possible | Buckling About Axis y | | | Buckling About Axis z | | | Lateral-Torsional Buckling | | | | |
|---|---|---|---|---|---|---|---|---|---|---|---|---|
| | | Possible | $k_{cr,y}$ | $L_{cr,y}$ [m] | Possible | $k_{cr,z}$ | $L_{cr,z}$ [m] | Possible | $k_z$ | $k_w$ | $L_w$ [m] | $L_T$ [m] |
| 117 | ☒ | ☒ | 1.00 | 3.562 | ☒ | 1.00 | 3.562 | ☐ | 1.0 | 1.0 | 3.562 | 3.562 |
| 118 | ☒ | ☒ | 1.00 | 3.820 | ☒ | 1.00 | 3.820 | ☒ | 1.0 | 1.0 | 3.820 | 3.820 |
| 119 | ☒ | ☒ | 1.00 | 2.780 | ☒ | 1.00 | 2.780 | ☒ | 1.0 | 1.0 | 2.780 | 2.780 |
| 120 | ☒ | ☒ | 1.00 | 3.140 | ☒ | 1.00 | 3.140 | ☒ | 1.0 | 1.0 | 3.140 | 3.140 |
| 121 | ☒ | ☒ | 1.00 | 3.562 | ☒ | 1.00 | 3.562 | ☒ | 1.0 | 1.0 | 3.562 | 3.562 |
| 122 | ☒ | ☒ | 1.00 | 4.980 | ☒ | 1.00 | 4.980 | ☒ | 1.0 | 1.0 | 4.980 | 4.980 |
| 123 | ☒ | ☒ | 1.00 | 5.590 | ☒ | 1.00 | 5.590 | ☒ | 1.0 | 1.0 | 5.590 | 5.590 |
| 124 | ☒ | ☒ | 1.00 | 0.660 | ☒ | 1.00 | 0.660 | ☒ | 1.0 | 1.0 | 0.660 | 0.660 |
| 125 | ☒ | ☒ | 1.00 | 5.590 | ☒ | 1.00 | 5.590 | ☒ | 1.0 | 1.0 | 5.590 | 5.590 |
| 126 | ☒ | ☒ | 1.00 | 0.660 | ☒ | 1.00 | 0.660 | ☒ | 1.0 | 1.0 | 0.660 | 0.660 |
| 127 | ☒ | ☒ | 1.00 | 5.590 | ☒ | 1.00 | 5.590 | ☒ | 1.0 | 1.0 | 5.590 | 5.590 |
| 128 | ☒ | ☒ | 1.00 | 0.660 | ☒ | 1.00 | 0.660 | ☒ | 1.0 | 1.0 | 0.660 | 0.660 |
| 129 | ☒ | ☒ | 1.00 | 5.590 | ☒ | 1.00 | 5.590 | ☒ | 1.0 | 1.0 | 5.590 | 5.590 |
| 130 | ☒ | ☒ | 1.00 | 0.660 | ☒ | 1.00 | 0.660 | ☒ | 1.0 | 1.0 | 0.660 | 0.660 |
| 131 | ☒ | ☒ | 1.00 | 5.590 | ☒ | 1.00 | 5.590 | ☒ | 1.0 | 1.0 | 5.590 | 5.590 |
| 132 | ☒ | ☒ | 1.00 | 3.562 | ☒ | 1.00 | 3.562 | ☐ | 1.0 | 1.0 | 3.562 | 3.562 |
| 133 | ☒ | ☒ | 1.00 | 5.590 | ☒ | 1.00 | 5.590 | ☒ | 1.0 | 1.0 | 5.590 | 5.590 |
| 134 | ☒ | ☒ | 1.00 | 1.873 | ☒ | 1.00 | 1.873 | ☒ | 1.0 | 1.0 | 1.873 | 1.873 |
| 135 | ☒ | ☒ | 1.00 | 3.820 | ☒ | 1.00 | 3.820 | ☒ | 1.0 | 1.0 | 3.820 | 3.820 |
| 136 | ☒ | ☒ | 1.00 | 2.780 | ☒ | 1.00 | 2.780 | ☒ | 1.0 | 1.0 | 2.780 | 2.780 |
| 137 | ☒ | ☒ | 1.00 | 0.660 | ☒ | 1.00 | 0.660 | ☒ | 1.0 | 1.0 | 0.660 | 0.660 |
| 138 | ☒ | ☒ | 1.00 | 3.563 | ☒ | 1.00 | 3.563 | ☒ | 1.0 | 1.0 | 3.563 | 3.563 |
| 139 | ☒ | ☒ | 1.00 | 4.980 | ☒ | 1.00 | 4.980 | ☒ | 1.0 | 1.0 | 4.980 | 4.980 |
| 140 | ☒ | ☒ | 1.00 | 2.375 | ☒ | 1.00 | 2.375 | ☒ | 1.0 | 1.0 | 2.375 | 2.375 |
| 141 | ☒ | ☒ | 1.00 | 2.375 | ☒ | 1.00 | 2.375 | ☒ | 1.0 | 1.0 | 2.375 | 2.375 |
| 142 | ☒ | ☒ | 1.00 | 2.375 | ☒ | 1.00 | 2.375 | ☒ | 1.0 | 1.0 | 2.375 | 2.375 |
| 143 | ☒ | ☒ | 1.00 | 2.375 | ☒ | 1.00 | 2.375 | ☒ | 1.0 | 1.0 | 2.375 | 2.375 |
| 144 | ☒ | ☒ | 1.00 | 2.375 | ☒ | 1.00 | 2.375 | ☒ | 1.0 | 1.0 | 2.375 | 2.375 |
| 145 | ☒ | ☒ | 1.00 | 2.375 | ☒ | 1.00 | 2.375 | ☒ | 1.0 | 1.0 | 2.375 | 2.375 |
| 146 | ☒ | ☒ | 1.00 | 2.375 | ☒ | 1.00 | 2.375 | ☒ | 1.0 | 1.0 | 2.375 | 2.375 |
| 147 | ☒ | ☒ | 1.00 | 2.375 | ☒ | 1.00 | 2.375 | ☒ | 1.0 | 1.0 | 2.375 | 2.375 |
| 148 | ☒ | ☒ | 1.00 | 2.375 | ☒ | 1.00 | 2.375 | ☒ | 1.0 | 1.0 | 2.375 | 2.375 |
| 149 | ☒ | ☒ | 1.00 | 2.375 | ☒ | 1.00 | 2.375 | ☒ | 1.0 | 1.0 | 2.375 | 2.375 |
| 150 | ☒ | ☒ | 1.00 | 2.375 | ☒ | 1.00 | 2.375 | ☒ | 1.0 | 1.0 | 2.375 | 2.375 |
| 151 | ☒ | ☒ | 1.00 | 2.375 | ☒ | 1.00 | 2.375 | ☒ | 1.0 | 1.0 | 2.375 | 2.375 |
| 152 | ☒ | ☒ | 1.00 | 0.525 | ☒ | 1.00 | 0.525 | ☒ | 1.0 | 1.0 | 0.525 | 0.525 |
| 153 | ☒ | ☒ | 1.00 | 3.820 | ☒ | 1.00 | 3.820 | ☒ | 1.0 | 1.0 | 3.820 | 3.820 |
| 154 | ☒ | ☒ | 1.00 | 0.660 | ☒ | 1.00 | 0.660 | ☒ | 1.0 | 1.0 | 0.660 | 0.660 |
| 155 | ☒ | ☒ | 1.00 | 0.525 | ☒ | 1.00 | 0.525 | ☒ | 1.0 | 1.0 | 0.525 | 0.525 |
| 156 | ☒ | ☒ | 1.00 | 1.160 | ☒ | 1.00 | 1.160 | ☒ | 1.0 | 1.0 | 1.160 | 1.160 |
| 157 | ☒ | ☒ | 1.00 | 1.747 | ☒ | 1.00 | 1.747 | ☒ | 1.0 | 1.0 | 1.747 | 1.747 |
| 158 | ☒ | ☒ | 1.00 | 1.348 | ☒ | 1.00 | 1.348 | ☒ | 1.0 | 1.0 | 1.348 | 1.348 |
| 159 | ☒ | ☒ | 1.00 | 3.563 | ☒ | 1.00 | 3.563 | ☒ | 1.0 | 1.0 | 3.563 | 3.563 |
| 160 | ☒ | ☒ | 1.00 | 3.562 | ☒ | 1.00 | 3.562 | ☒ | 1.0 | 1.0 | 3.562 | 3.562 |
| 161 | ☒ | ☒ | 1.00 | 3.562 | ☒ | 1.00 | 3.562 | ☒ | 1.0 | 1.0 | 3.562 | 3.562 |
| 162 | ☒ | ☒ | 1.00 | 3.562 | ☒ | 1.00 | 3.562 | ☒ | 1.0 | 1.0 | 3.562 | 3.562 |
| 163 | ☒ | ☒ | 1.00 | 3.562 | ☒ | 1.00 | 3.562 | ☒ | 1.0 | 1.0 | 3.562 | 3.562 |
| 164 | ☒ | ☒ | 1.00 | 3.562 | ☒ | 1.00 | 3.562 | ☒ | 1.0 | 1.0 | 3.562 | 3.562 |
| 165 | ☒ | ☒ | 1.00 | 3.563 | ☒ | 1.00 | 3.563 | ☒ | 1.0 | 1.0 | 3.563 | 3.563 |
| 166 | ☒ | ☒ | 1.00 | 3.040 | ☒ | 1.00 | 3.040 | ☒ | 1.0 | 1.0 | 3.040 | 3.040 |
| 167 | ☒ | ☒ | 1.00 | 3.039 | ☒ | 1.00 | 3.039 | ☒ | 1.0 | 1.0 | 3.039 | 3.039 |
| 168 | ☒ | ☒ | 1.00 | 3.039 | ☒ | 1.00 | 3.039 | ☒ | 1.0 | 1.0 | 3.039 | 3.039 |
| 169 | ☒ | ☒ | 1.00 | 3.563 | ☒ | 1.00 | 3.563 | ☒ | 1.0 | 1.0 | 3.563 | 3.563 |
| 170 | ☒ | ☒ | 1.00 | 3.563 | ☒ | 1.00 | 3.563 | ☒ | 1.0 | 1.0 | 3.563 | 3.563 |
| 171 | ☒ | ☒ | 1.00 | 3.563 | ☒ | 1.00 | 3.563 | ☒ | 1.0 | 1.0 | 3.563 | 3.563 |
| 172 | ☒ | ☒ | 1.00 | 3.563 | ☒ | 1.00 | 3.563 | ☒ | 1.0 | 1.0 | 3.563 | 3.563 |
| 173 | ☒ | ☒ | 1.00 | 4.390 | ☒ | 1.00 | 4.390 | ☒ | 1.0 | 1.0 | 4.390 | 4.390 |
| 174 | ☒ | ☒ | 1.00 | 3.563 | ☒ | 1.00 | 3.563 | ☒ | 1.0 | 1.0 | 3.563 | 3.563 |
| 175 | ☒ | ☒ | 1.00 | 2.785 | ☒ | 1.00 | 2.785 | ☐ | 1.0 | 1.0 | 2.785 | 2.785 |
| 176 | ☒ | ☒ | 1.00 | 3.808 | ☒ | 1.00 | 3.808 | ☒ | 1.0 | 1.0 | 3.808 | 3.808 |
| 177 | ☒ | ☒ | 1.00 | 0.660 | ☒ | 1.00 | 0.660 | ☒ | 1.0 | 1.0 | 0.660 | 0.660 |
| 178 | ☒ | ☒ | 1.00 | 3.808 | ☒ | 1.00 | 3.808 | ☒ | 1.0 | 1.0 | 3.808 | 3.808 |
| 179 | ☒ | ☒ | 1.00 | 3.808 | ☒ | 1.00 | 3.808 | ☒ | 1.0 | 1.0 | 3.808 | 3.808 |
| 180 | ☒ | ☒ | 1.00 | 3.808 | ☒ | 1.00 | 3.808 | ☒ | 1.0 | 1.0 | 3.808 | 3.808 |
| 181 | ☒ | ☒ | 1.00 | 0.660 | ☒ | 1.00 | 0.660 | ☒ | 1.0 | 1.0 | 0.660 | 0.660 |
| 182 | ☒ | ☒ | 1.00 | 0.660 | ☒ | 1.00 | 0.660 | ☒ | 1.0 | 1.0 | 0.660 | 0.660 |
| 183 | ☒ | ☒ | 1.00 | 0.660 | ☒ | 1.00 | 0.660 | ☒ | 1.0 | 1.0 | 0.660 | 0.660 |
| 184 | ☒ | ☒ | 1.00 | 3.220 | ☒ | 1.00 | 3.220 | ☒ | 1.0 | 1.0 | 3.220 | 3.220 |
| 185 | ☒ | ☒ | 1.00 | 3.563 | ☒ | 1.00 | 3.563 | ☒ | 1.0 | 1.0 | 3.563 | 3.563 |
| 186 | ☒ | ☒ | 1.00 | 3.563 | ☒ | 1.00 | 3.563 | ☒ | 1.0 | 1.0 | 3.563 | 3.563 |
| 187 | ☒ | ☒ | 1.00 | 3.563 | ☒ | 1.00 | 3.563 | ☒ | 1.0 | 1.0 | 3.563 | 3.563 |
| 189 | ☒ | ☒ | 1.00 | 2.785 | ☒ | 1.00 | 2.785 | ☐ | 1.0 | 1.0 | 2.785 | 2.785 |
| 190 | ☒ | ☒ | 1.00 | 3.816 | ☒ | 1.00 | 3.816 | ☐ | 1.0 | 1.0 | 3.816 | 3.816 |
| 191 | ☒ | ☒ | 1.00 | 3.563 | ☒ | 1.00 | 3.563 | ☒ | 1.0 | 1.0 | 3.563 | 3.563 |
| 192 | ☒ | ☒ | 1.00 | 2.785 | ☒ | 1.00 | 2.785 | ☐ | 1.0 | 1.0 | 2.785 | 2.785 |
| 193 | ☒ | ☒ | 1.00 | 3.039 | ☒ | 1.00 | 3.039 | ☒ | 1.0 | 1.0 | 3.039 | 3.039 |
| 194 | ☒ | ☒ | 1.00 | 3.563 | ☒ | 1.00 | 3.563 | ☒ | 1.0 | 1.0 | 3.563 | 3.563 |
| 195 | ☒ | ☒ | 1.00 | 4.293 | ☒ | 1.00 | 4.293 | ☐ | 1.0 | 1.0 | 4.293 | 4.293 |
| 196 | ☒ | ☒ | 1.00 | 2.520 | ☒ | 1.00 | 2.520 | ☐ | 1.0 | 1.0 | 2.520 | 2.520 |
| 197 | ☒ | ☒ | 1.00 | 2.785 | ☒ | 1.00 | 2.785 | ☐ | 1.0 | 1.0 | 2.785 | 2.785 |
| 198 | ☒ | ☒ | 1.00 | 3.040 | ☒ | 1.00 | 3.040 | ☒ | 1.0 | 1.0 | 3.040 | 3.040 |
| 199 | ☒ | ☒ | 1.00 | 2.375 | ☒ | 1.00 | 2.375 | ☒ | 1.0 | 1.0 | 2.375 | 2.375 |
| 200 | ☒ | ☒ | 1.00 | 1.348 | ☒ | 1.00 | 1.348 | ☒ | 1.0 | 1.0 | 1.348 | 1.348 |
| 202 | ☒ | ☒ | 1.00 | 1.033 | ☒ | 1.00 | 1.033 | ☒ | 1.0 | 1.0 | 1.033 | 1.033 |
| 203 | ☒ | ☒ | 1.00 | 3.562 | ☒ | 1.00 | 3.562 | ☐ | 1.0 | 1.0 | 3.562 | 3.562 |
| 204 | ☒ | ☒ | 1.00 | 3.562 | ☒ | 1.00 | 3.562 | ☐ | 1.0 | 1.0 | 3.562 | 3.562 |
| 205 | ☒ | ☒ | 1.00 | 3.563 | ☒ | 1.00 | 3.563 | ☒ | 1.0 | 1.0 | 3.563 | 3.563 |
| 206 | ☒ | ☒ | 1.00 | 3.938 | ☒ | 1.00 | 3.938 | ☐ | 1.0 | 1.0 | 3.938 | 3.938 |
| 207 | ☒ | ☒ | 1.00 | 4.602 | ☒ | 1.00 | 4.602 | ☐ | 1.0 | 1.0 | 4.602 | 4.602 |
| 208 | ☒ | ☒ | 1.00 | 3.563 | ☒ | 1.00 | 3.563 | ☒ | 1.0 | 1.0 | 3.563 | 3.563 |
| 209 | ☒ | ☒ | 1.00 | 3.210 | ☒ | 1.00 | 3.210 | ☐ | 1.0 | 1.0 | 3.210 | 3.210 |
| 210 | ☒ | ☒ | 1.00 | 1.187 | ☒ | 1.00 | 1.187 | ☒ | 1.0 | 1.0 | 1.187 | 1.187 |
| 211 | ☒ | ☒ | 1.00 | 2.375 | ☒ | 1.00 | 2.375 | ☒ | 1.0 | 1.0 | 2.375 | 2.375 |
| 212 | ☒ | ☒ | 1.00 | 3.563 | ☒ | 1.00 | 3.563 | ☐ | 1.0 | 1.0 | 3.563 | 3.563 |

## 1.5 EFFECTIVE LENGTHS - MEMBERS

| Member No. | Buckling Possible | Buckling About Axis y Possible | $k_{cr,y}$ | $L_{cr,y}$ [m] | Buckling About Axis z Possible | $k_{cr,z}$ | $L_{cr,z}$ [m] | Lateral-Torsional Buckling Possible | $k_z$ | $k_w$ | $L_w$ [m] | $L_T$ [m] |
|---|---|---|---|---|---|---|---|---|---|---|---|---|
| 213 | ☒ | ☒ | 1.00 | 3.140 | ☒ | 1.00 | 3.140 | ☒ | 1.0 | 1.0 | 3.140 | 3.140 |
| 214 | ☒ | ☒ | 1.00 | 1.348 | ☒ | 1.00 | 1.348 | ☒ | 1.0 | 1.0 | 1.348 | 1.348 |
| 215 | ☒ | ☒ | 1.00 | 3.816 | ☒ | 1.00 | 3.816 | ☐ | 1.0 | 1.0 | 3.816 | 3.816 |
| 216 | ☒ | ☒ | 1.00 | 1.188 | ☒ | 1.00 | 1.188 | ☒ | 1.0 | 1.0 | 1.188 | 1.188 |
| 217 | ☒ | ☒ | 1.00 | 3.562 | ☒ | 1.00 | 3.562 | ☒ | 1.0 | 1.0 | 3.562 | 3.562 |
| 218 | ☒ | ☒ | 1.00 | 3.210 | ☒ | 1.00 | 3.210 | ☐ | 1.0 | 1.0 | 3.210 | 3.210 |
| 219 | ☒ | ☒ | 1.00 | 1.610 | ☒ | 1.00 | 1.610 | ☒ | 1.0 | 1.0 | 1.610 | 1.610 |
| 220 | ☒ | ☒ | 1.00 | 3.562 | ☒ | 1.00 | 3.562 | ☒ | 1.0 | 1.0 | 3.562 | 3.562 |
| 221 | ☒ | ☒ | 1.00 | 1.187 | ☒ | 1.00 | 1.187 | ☒ | 1.0 | 1.0 | 1.187 | 1.187 |
| 222 | ☒ | ☒ | 1.00 | 3.563 | ☒ | 1.00 | 3.563 | ☐ | 1.0 | 1.0 | 3.563 | 3.563 |
| 223 | ☒ | ☒ | 1.00 | 2.375 | ☒ | 1.00 | 2.375 | ☒ | 1.0 | 1.0 | 2.375 | 2.375 |
| 224 | ☒ | ☒ | 1.00 | 2.375 | ☒ | 1.00 | 2.375 | ☒ | 1.0 | 1.0 | 2.375 | 2.375 |
| 225 | ☒ | ☒ | 1.00 | 2.375 | ☒ | 1.00 | 2.375 | ☒ | 1.0 | 1.0 | 2.375 | 2.375 |
| 226 | ☒ | ☒ | 1.00 | 2.375 | ☒ | 1.00 | 2.375 | ☒ | 1.0 | 1.0 | 2.375 | 2.375 |
| 227 | ☒ | ☒ | 1.00 | 2.375 | ☒ | 1.00 | 2.375 | ☒ | 1.0 | 1.0 | 2.375 | 2.375 |
| 228 | ☒ | ☒ | 1.00 | 1.850 | ☒ | 1.00 | 1.850 | ☒ | 1.0 | 1.0 | 1.850 | 1.850 |
| 229 | ☒ | ☒ | 1.00 | 0.262 | ☒ | 1.00 | 0.262 | ☒ | 1.0 | 1.0 | 0.262 | 0.262 |
| 230 | ☒ | ☒ | 1.00 | 1.160 | ☒ | 1.00 | 1.160 | ☒ | 1.0 | 1.0 | 1.160 | 1.160 |
| 231 | ☒ | ☒ | 1.00 | 8.060 | ☒ | 1.00 | 8.060 | ☐ | 1.0 | 1.0 | 8.060 | 8.060 |
| 232 | ☒ | ☒ | 1.00 | 3.563 | ☒ | 1.00 | 3.563 | ☐ | 1.0 | 1.0 | 3.563 | 3.563 |
| 233 | ☒ | ☒ | 1.00 | 3.140 | ☒ | 1.00 | 3.140 | ☐ | 1.0 | 1.0 | 3.140 | 3.140 |
| 234 | ☒ | ☒ | 1.00 | 1.482 | ☒ | 1.00 | 1.482 | ☐ | 1.0 | 1.0 | 1.482 | 1.482 |
| 235 | ☒ | ☒ | 1.00 | 2.785 | ☒ | 1.00 | 2.785 | ☐ | 1.0 | 1.0 | 2.785 | 2.785 |
| 236 | ☒ | ☒ | 1.00 | 1.482 | ☒ | 1.00 | 1.482 | ☐ | 1.0 | 1.0 | 1.482 | 1.482 |
| 237 | ☒ | ☒ | 1.00 | 2.785 | ☒ | 1.00 | 2.785 | ☐ | 1.0 | 1.0 | 2.785 | 2.785 |
| 238 | ☒ | ☒ | 1.00 | 4.239 | ☒ | 1.00 | 4.239 | ☐ | 1.0 | 1.0 | 4.239 | 4.239 |
| 239 | ☒ | ☒ | 1.00 | 0.580 | ☒ | 1.00 | 0.580 | ☒ | 1.0 | 1.0 | 0.580 | 0.580 |
| 240 | ☒ | ☒ | 1.00 | 6.164 | ☒ | 1.00 | 6.164 | ☐ | 1.0 | 1.0 | 6.164 | 6.164 |
| 241 | ☒ | ☒ | 1.00 | 3.924 | ☒ | 1.00 | 3.924 | ☐ | 1.0 | 1.0 | 3.924 | 3.924 |
| 242 | ☒ | ☒ | 1.00 | 6.164 | ☒ | 1.00 | 6.164 | ☐ | 1.0 | 1.0 | 6.164 | 6.164 |
| 243 | ☒ | ☒ | 1.00 | 3.924 | ☒ | 1.00 | 3.924 | ☐ | 1.0 | 1.0 | 3.924 | 3.924 |
| 244 | ☒ | ☒ | 1.00 | 1.482 | ☒ | 1.00 | 1.482 | ☐ | 1.0 | 1.0 | 1.482 | 1.482 |
| 245 | ☒ | ☒ | 1.00 | 2.785 | ☒ | 1.00 | 2.785 | ☐ | 1.0 | 1.0 | 2.785 | 2.785 |
| 246 | ☒ | ☒ | 1.00 | 6.164 | ☒ | 1.00 | 6.164 | ☐ | 1.0 | 1.0 | 6.164 | 6.164 |
| 247 | ☒ | ☒ | 1.00 | 3.924 | ☒ | 1.00 | 3.924 | ☐ | 1.0 | 1.0 | 3.924 | 3.924 |
| 248 | ☒ | ☒ | 1.00 | 1.482 | ☒ | 1.00 | 1.482 | ☐ | 1.0 | 1.0 | 1.482 | 1.482 |
| 249 | ☒ | ☒ | 1.00 | 2.785 | ☒ | 1.00 | 2.785 | ☐ | 1.0 | 1.0 | 2.785 | 2.785 |
| 250 | ☒ | ☒ | 1.00 | 6.164 | ☒ | 1.00 | 6.164 | ☐ | 1.0 | 1.0 | 6.164 | 6.164 |
| 251 | ☒ | ☒ | 1.00 | 3.924 | ☒ | 1.00 | 3.924 | ☐ | 1.0 | 1.0 | 3.924 | 3.924 |
| 252 | ☒ | ☒ | 1.00 | 2.016 | ☒ | 1.00 | 2.016 | ☐ | 1.0 | 1.0 | 2.016 | 2.016 |
| 253 | ☒ | ☒ | 1.00 | 2.225 | ☒ | 1.00 | 2.225 | ☒ | 1.0 | 1.0 | 2.225 | 2.225 |
| 254 | ☒ | ☒ | 1.00 | 4.268 | ☒ | 1.00 | 4.268 | ☐ | 1.0 | 1.0 | 4.268 | 4.268 |
| 255 | ☒ | ☒ | 1.00 | 4.239 | ☒ | 1.00 | 4.239 | ☐ | 1.0 | 1.0 | 4.239 | 4.239 |
| 256 | ☒ | ☒ | 1.00 | 4.268 | ☒ | 1.00 | 4.268 | ☐ | 1.0 | 1.0 | 4.268 | 4.268 |
| 257 | ☒ | ☒ | 1.00 | 4.239 | ☒ | 1.00 | 4.239 | ☐ | 1.0 | 1.0 | 4.239 | 4.239 |
| 258 | ☒ | ☒ | 1.00 | 2.785 | ☒ | 1.00 | 2.785 | ☐ | 1.0 | 1.0 | 2.785 | 2.785 |
| 259 | ☒ | ☒ | 1.00 | 0.580 | ☒ | 1.00 | 0.580 | ☒ | 1.0 | 1.0 | 0.580 | 0.580 |
| 260 | ☒ | ☒ | 1.00 | 8.811 | ☒ | 1.00 | 8.811 | ☐ | 1.0 | 1.0 | 8.811 | 8.811 |
| 261 | ☒ | ☒ | 1.00 | 3.624 | ☒ | 1.00 | 3.624 | ☐ | 1.0 | 1.0 | 3.624 | 3.624 |
| 262 | ☒ | ☒ | 1.00 | 2.785 | ☒ | 1.00 | 2.785 | ☐ | 1.0 | 1.0 | 2.785 | 2.785 |
| 263 | ☒ | ☒ | 1.00 | 0.580 | ☒ | 1.00 | 0.580 | ☒ | 1.0 | 1.0 | 0.580 | 0.580 |
| 264 | ☒ | ☒ | 1.00 | 8.811 | ☒ | 1.00 | 8.811 | ☐ | 1.0 | 1.0 | 8.811 | 8.811 |
| 265 | ☒ | ☒ | 1.00 | 3.624 | ☒ | 1.00 | 3.624 | ☐ | 1.0 | 1.0 | 3.624 | 3.624 |
| 266 | ☒ | ☒ | 1.00 | 4.268 | ☒ | 1.00 | 4.268 | ☐ | 1.0 | 1.0 | 4.268 | 4.268 |
| 267 | ☒ | ☒ | 1.00 | 4.239 | ☒ | 1.00 | 4.239 | ☐ | 1.0 | 1.0 | 4.239 | 4.239 |
| 268 | ☒ | ☒ | 1.00 | 2.785 | ☒ | 1.00 | 2.785 | ☐ | 1.0 | 1.0 | 2.785 | 2.785 |
| 269 | ☒ | ☒ | 1.00 | 0.580 | ☒ | 1.00 | 0.580 | ☒ | 1.0 | 1.0 | 0.580 | 0.580 |
| 270 | ☒ | ☒ | 1.00 | 8.811 | ☒ | 1.00 | 8.811 | ☐ | 1.0 | 1.0 | 8.811 | 8.811 |
| 271 | ☒ | ☒ | 1.00 | 3.624 | ☒ | 1.00 | 3.624 | ☐ | 1.0 | 1.0 | 3.624 | 3.624 |
| 272 | ☒ | ☒ | 1.00 | 4.268 | ☒ | 1.00 | 4.268 | ☐ | 1.0 | 1.0 | 4.268 | 4.268 |
| 273 | ☒ | ☒ | 1.00 | 4.239 | ☒ | 1.00 | 4.239 | ☐ | 1.0 | 1.0 | 4.239 | 4.239 |
| 274 | ☒ | ☒ | 1.00 | 2.785 | ☒ | 1.00 | 2.785 | ☐ | 1.0 | 1.0 | 2.785 | 2.785 |
| 275 | ☒ | ☒ | 1.00 | 0.580 | ☒ | 1.00 | 0.580 | ☒ | 1.0 | 1.0 | 0.580 | 0.580 |
| 276 | ☒ | ☒ | 1.00 | 8.811 | ☒ | 1.00 | 8.811 | ☐ | 1.0 | 1.0 | 8.811 | 8.811 |
| 277 | ☒ | ☒ | 1.00 | 3.624 | ☒ | 1.00 | 3.624 | ☐ | 1.0 | 1.0 | 3.624 | 3.624 |
| 278 | ☒ | ☒ | 1.00 | 4.268 | ☒ | 1.00 | 4.268 | ☐ | 1.0 | 1.0 | 4.268 | 4.268 |
| 279 | ☒ | ☒ | 1.00 | 1.750 | ☒ | 1.00 | 1.750 | ☒ | 1.0 | 1.0 | 1.750 | 1.750 |
| 280 | ☒ | ☒ | 1.00 | 7.125 | ☒ | 1.00 | 7.125 | ☐ | 1.0 | 1.0 | 7.125 | 7.125 |
| 281 | ☒ | ☒ | 1.00 | 7.125 | ☒ | 1.00 | 7.125 | ☐ | 1.0 | 1.0 | 7.125 | 7.125 |
| 282 | ☒ | ☒ | 1.00 | 0.615 | ☒ | 1.00 | 0.615 | ☐ | 1.0 | 1.0 | 0.615 | 0.615 |
| 283 | ☒ | ☒ | 1.00 | 7.125 | ☒ | 1.00 | 7.125 | ☐ | 1.0 | 1.0 | 7.125 | 7.125 |
| 284 | ☒ | ☒ | 1.00 | 7.125 | ☒ | 1.00 | 7.125 | ☐ | 1.0 | 1.0 | 7.125 | 7.125 |
| 285 | ☒ | ☒ | 1.00 | 1.610 | ☒ | 1.00 | 1.610 | ☒ | 1.0 | 1.0 | 1.610 | 1.610 |
| 286 | ☒ | ☒ | 1.00 | 3.563 | ☒ | 1.00 | 3.563 | ☐ | 1.0 | 1.0 | 3.563 | 3.563 |
| 287 | ☒ | ☒ | 1.00 | 3.563 | ☒ | 1.00 | 3.563 | ☐ | 1.0 | 1.0 | 3.563 | 3.563 |
| 288 | ☒ | ☒ | 1.00 | 0.615 | ☒ | 1.00 | 0.615 | ☒ | 1.0 | 1.0 | 0.615 | 0.615 |
| 289 | ☒ | ☒ | 1.00 | 7.125 | ☒ | 1.00 | 7.125 | ☐ | 1.0 | 1.0 | 7.125 | 7.125 |
| 290 | ☒ | ☒ | 1.00 | 7.125 | ☒ | 1.00 | 7.125 | ☐ | 1.0 | 1.0 | 7.125 | 7.125 |
| 291 | ☒ | ☒ | 1.00 | 4.268 | ☒ | 1.00 | 4.268 | ☐ | 1.0 | 1.0 | 4.268 | 4.268 |
| 292 | ☒ | ☒ | 1.00 | 4.239 | ☒ | 1.00 | 4.239 | ☐ | 1.0 | 1.0 | 4.239 | 4.239 |
| 293 | ☒ | ☒ | 1.00 | 3.366 | ☒ | 1.00 | 3.366 | ☐ | 1.0 | 1.0 | 3.366 | 3.366 |
| 294 | ☒ | ☒ | 1.00 | 8.811 | ☒ | 1.00 | 8.811 | ☐ | 1.0 | 1.0 | 8.811 | 8.811 |
| 295 | ☒ | ☒ | 1.00 | 3.624 | ☒ | 1.00 | 3.624 | ☐ | 1.0 | 1.0 | 3.624 | 3.624 |
| 296 | ☒ | ☒ | 1.00 | 7.877 | ☒ | 1.00 | 7.877 | ☐ | 1.0 | 1.0 | 7.877 | 7.877 |
| 297 | ☒ | ☒ | 1.00 | 10.531 | ☒ | 1.00 | 10.531 | ☐ | 1.0 | 1.0 | 10.531 | 10.531 |
| 298 | ☒ | ☒ | 1.00 | 7.877 | ☒ | 1.00 | 7.877 | ☐ | 1.0 | 1.0 | 7.877 | 7.877 |
| 299 | ☒ | ☒ | 1.00 | 10.531 | ☒ | 1.00 | 10.531 | ☐ | 1.0 | 1.0 | 10.531 | 10.531 |
| 300 | ☒ | ☒ | 1.00 | 7.877 | ☒ | 1.00 | 7.877 | ☐ | 1.0 | 1.0 | 7.877 | 7.877 |
| 301 | ☒ | ☒ | 1.00 | 10.531 | ☒ | 1.00 | 10.531 | ☐ | 1.0 | 1.0 | 10.531 | 10.531 |
| 302 | ☒ | ☒ | 1.00 | 10.531 | ☒ | 1.00 | 10.531 | ☐ | 1.0 | 1.0 | 10.531 | 10.531 |
| 303 | ☒ | ☒ | 1.00 | 3.938 | ☒ | 1.00 | 3.938 | ☐ | 1.0 | 1.0 | 3.938 | 3.938 |
| 304 | ☒ | ☒ | 1.00 | 10.357 | ☒ | 1.00 | 10.357 | ☐ | 1.0 | 1.0 | 10.357 | 10.357 |
| 305 | ☒ | ☒ | 1.00 | 4.268 | ☒ | 1.00 | 4.268 | ☐ | 1.0 | 1.0 | 4.268 | 4.268 |
| 306 | ☒ | ☒ | 1.00 | 9.204 | ☒ | 1.00 | 9.204 | ☐ | 1.0 | 1.0 | 9.204 | 9.204 |

## 1.5 EFFECTIVE LENGTHS - MEMBERS

| Member No. | Buckling Possible | Buckling About Axis y | | | Buckling About Axis z | | | Lateral-Torsional Buckling | | | | |
|---|---|---|---|---|---|---|---|---|---|---|---|---|
| | | Possible | $k_{cr,y}$ | $L_{cr,y}$ [m] | Possible | $k_{cr,z}$ | $L_{cr,z}$ [m] | Possible | $k_z$ | $k_w$ | $L_w$ [m] | $L_T$ [m] |
| 307 | ☒ | ☒ | 1.00 | 4.268 | ☒ | 1.00 | 4.268 | ☐ | 1.0 | 1.0 | 4.268 | 4.268 |
| 308 | ☒ | ☒ | 1.00 | 4.268 | ☒ | 1.00 | 4.268 | ☐ | 1.0 | 1.0 | 4.268 | 4.268 |
| 309 | ☒ | ☒ | 1.00 | 4.268 | ☒ | 1.00 | 4.268 | ☐ | 1.0 | 1.0 | 4.268 | 4.268 |
| 310 | ☒ | ☒ | 1.00 | 9.204 | ☒ | 1.00 | 9.204 | ☐ | 1.0 | 1.0 | 9.204 | 9.204 |
| 311 | ☒ | ☒ | 1.00 | 9.204 | ☒ | 1.00 | 9.204 | ☐ | 1.0 | 1.0 | 9.204 | 9.204 |
| 312 | ☒ | ☒ | 1.00 | 4.602 | ☒ | 1.00 | 4.602 | ☐ | 1.0 | 1.0 | 4.602 | 4.602 |
| 313 | ☒ | ☒ | 1.00 | 9.046 | ☒ | 1.00 | 9.046 | ☐ | 1.0 | 1.0 | 9.046 | 9.046 |
| 314 | ☒ | ☒ | 1.00 | 7.740 | ☒ | 1.00 | 7.740 | ☐ | 1.0 | 1.0 | 7.740 | 7.740 |
| 315 | ☒ | ☒ | 1.00 | 2.375 | ☒ | 1.00 | 2.375 | ☒ | 1.0 | 1.0 | 2.375 | 2.375 |
| 316 | ☒ | ☒ | 1.00 | 2.375 | ☒ | 1.00 | 2.375 | ☒ | 1.0 | 1.0 | 2.375 | 2.375 |
| 317 | ☒ | ☒ | 1.00 | 3.820 | ☒ | 1.00 | 3.820 | ☒ | 1.0 | 1.0 | 3.820 | 3.820 |
| 318 | ☒ | ☒ | 1.00 | 3.820 | ☒ | 1.00 | 3.820 | ☒ | 1.0 | 1.0 | 3.820 | 3.820 |
| 319 | ☒ | ☒ | 1.00 | 1.187 | ☒ | 1.00 | 1.187 | ☒ | 1.0 | 1.0 | 1.187 | 1.187 |
| 320 | ☒ | ☒ | 1.00 | 2.375 | ☒ | 1.00 | 2.375 | ☒ | 1.0 | 1.0 | 2.375 | 2.375 |
| 321 | ☒ | ☒ | 1.00 | 2.780 | ☒ | 1.00 | 2.780 | ☒ | 1.0 | 1.0 | 2.780 | 2.780 |
| 322 | ☒ | ☒ | 1.00 | 2.780 | ☒ | 1.00 | 2.780 | ☒ | 1.0 | 1.0 | 2.780 | 2.780 |
| 323 | ☒ | ☒ | 1.00 | 3.820 | ☒ | 1.00 | 3.820 | ☒ | 1.0 | 1.0 | 3.820 | 3.820 |
| 324 | ☒ | ☒ | 1.00 | 3.820 | ☒ | 1.00 | 3.820 | ☒ | 1.0 | 1.0 | 3.820 | 3.820 |
| 325 | ☒ | ☒ | 1.00 | 2.780 | ☒ | 1.00 | 2.780 | ☒ | 1.0 | 1.0 | 2.780 | 2.780 |
| 326 | ☒ | ☒ | 1.00 | 2.780 | ☒ | 1.00 | 2.780 | ☒ | 1.0 | 1.0 | 2.780 | 2.780 |
| 327 | ☒ | ☒ | 1.00 | 3.820 | ☒ | 1.00 | 3.820 | ☒ | 1.0 | 1.0 | 3.820 | 3.820 |
| 328 | ☒ | ☒ | 1.00 | 3.820 | ☒ | 1.00 | 3.820 | ☒ | 1.0 | 1.0 | 3.820 | 3.820 |
| 329 | ☒ | ☒ | 1.00 | 2.780 | ☒ | 1.00 | 2.780 | ☒ | 1.0 | 1.0 | 2.780 | 2.780 |
| 330 | ☒ | ☒ | 1.00 | 2.780 | ☒ | 1.00 | 2.780 | ☒ | 1.0 | 1.0 | 2.780 | 2.780 |
| 331 | ☒ | ☒ | 1.00 | 3.820 | ☒ | 1.00 | 3.820 | ☒ | 1.0 | 1.0 | 3.820 | 3.820 |
| 332 | ☒ | ☒ | 1.00 | 3.820 | ☒ | 1.00 | 3.820 | ☒ | 1.0 | 1.0 | 3.820 | 3.820 |
| 333 | ☒ | ☒ | 1.00 | 2.780 | ☒ | 1.00 | 2.780 | ☒ | 1.0 | 1.0 | 2.780 | 2.780 |
| 334 | ☒ | ☒ | 1.00 | 2.780 | ☒ | 1.00 | 2.780 | ☒ | 1.0 | 1.0 | 2.780 | 2.780 |
| 335 | ☒ | ☒ | 1.00 | 1.873 | ☒ | 1.00 | 1.873 | ☒ | 1.0 | 1.0 | 1.873 | 1.873 |
| 336 | ☒ | ☒ | 1.00 | 1.873 | ☒ | 1.00 | 1.873 | ☒ | 1.0 | 1.0 | 1.873 | 1.873 |
| 337 | ☒ | ☒ | 1.00 | 3.820 | ☒ | 1.00 | 3.820 | ☒ | 1.0 | 1.0 | 3.820 | 3.820 |
| 338 | ☒ | ☒ | 1.00 | 0.525 | ☒ | 1.00 | 0.525 | ☒ | 1.0 | 1.0 | 0.525 | 0.525 |
| 339 | ☒ | ☒ | 1.00 | 3.220 | ☒ | 1.00 | 3.220 | ☒ | 1.0 | 1.0 | 3.220 | 3.220 |
| 340 | ☒ | ☒ | 1.00 | 0.615 | ☒ | 1.00 | 0.615 | ☒ | 1.0 | 1.0 | 0.615 | 0.615 |
| 341 | ☒ | ☒ | 1.00 | 0.615 | ☒ | 1.00 | 0.615 | ☒ | 1.0 | 1.0 | 0.615 | 0.615 |
| 342 | ☒ | ☒ | 1.00 | 0.615 | ☒ | 1.00 | 0.615 | ☐ | 1.0 | 1.0 | 0.615 | 0.615 |
| 343 | ☒ | ☒ | 1.00 | 0.615 | ☒ | 1.00 | 0.615 | ☒ | 1.0 | 1.0 | 0.615 | 0.615 |
| 344 | ☒ | ☒ | 1.00 | 1.035 | ☒ | 1.00 | 1.035 | ☒ | 1.0 | 1.0 | 1.035 | 1.035 |
| 345 | ☒ | ☒ | 1.00 | 0.270 | ☒ | 1.00 | 0.270 | ☒ | 1.0 | 1.0 | 0.270 | 0.270 |
| 346 | ☒ | ☒ | 1.00 | 0.271 | ☒ | 1.00 | 0.271 | ☒ | 1.0 | 1.0 | 0.271 | 0.271 |
| 347 | ☒ | ☒ | 1.00 | 0.271 | ☒ | 1.00 | 0.271 | ☒ | 1.0 | 1.0 | 0.271 | 0.271 |
| 348 | ☒ | ☒ | 1.00 | 1.670 | ☒ | 1.00 | 1.670 | ☒ | 1.0 | 1.0 | 1.670 | 1.670 |
| 349 | ☒ | ☒ | 1.00 | 0.271 | ☒ | 1.00 | 0.271 | ☒ | 1.0 | 1.0 | 0.271 | 0.271 |
| 350 | ☒ | ☒ | 1.00 | 3.563 | ☒ | 1.00 | 3.563 | ☒ | 1.0 | 1.0 | 3.563 | 3.563 |
| 351 | ☒ | ☒ | 1.00 | 0.270 | ☒ | 1.00 | 0.270 | ☒ | 1.0 | 1.0 | 0.270 | 0.270 |
| 352 | ☒ | ☒ | 1.00 | 0.100 | ☒ | 1.00 | 0.100 | ☒ | 1.0 | 1.0 | 0.100 | 0.100 |
| 353 | ☒ | ☒ | 1.00 | 2.785 | ☒ | 1.00 | 2.785 | ☒ | 1.0 | 1.0 | 2.785 | 2.785 |
| 354 | ☒ | ☒ | 1.00 | 2.225 | ☒ | 1.00 | 2.225 | ☒ | 1.0 | 1.0 | 2.225 | 2.225 |
| 355 | ☒ | ☒ | 1.00 | 1.750 | ☒ | 1.00 | 1.750 | ☒ | 1.0 | 1.0 | 1.750 | 1.750 |
| 356 | ☒ | ☒ | 1.00 | 3.366 | ☒ | 1.00 | 3.366 | ☐ | 1.0 | 1.0 | 3.366 | 3.366 |
| 357 | ☒ | ☒ | 1.00 | 1.670 | ☒ | 1.00 | 1.670 | ☒ | 1.0 | 1.0 | 1.670 | 1.670 |
| 358 | ☒ | ☒ | 1.00 | 3.310 | ☒ | 1.00 | 3.310 | ☐ | 1.0 | 1.0 | 3.310 | 3.310 |
| 359 | ☒ | ☒ | 1.00 | 1.348 | ☒ | 1.00 | 1.348 | ☒ | 1.0 | 1.0 | 1.348 | 1.348 |
| 360 | ☒ | ☒ | 1.00 | 0.510 | ☒ | 1.00 | 0.510 | ☒ | 1.0 | 1.0 | 0.510 | 0.510 |
| 361 | ☒ | ☒ | 1.00 | 1.747 | ☒ | 1.00 | 1.747 | ☒ | 1.0 | 1.0 | 1.747 | 1.747 |
| 362 | ☒ | ☒ | 1.00 | 2.375 | ☒ | 1.00 | 2.375 | ☒ | 1.0 | 1.0 | 2.375 | 2.375 |
| 363 | ☒ | ☒ | 1.00 | 0.660 | ☒ | 1.00 | 0.660 | ☒ | 1.0 | 1.0 | 0.660 | 0.660 |
| 364 | ☒ | ☒ | 1.00 | 0.660 | ☒ | 1.00 | 0.660 | ☒ | 1.0 | 1.0 | 0.660 | 0.660 |
| 365 | ☒ | ☒ | 1.00 | 0.660 | ☒ | 1.00 | 0.660 | ☒ | 1.0 | 1.0 | 0.660 | 0.660 |
| 366 | ☒ | ☒ | 1.00 | 0.660 | ☒ | 1.00 | 0.660 | ☒ | 1.0 | 1.0 | 0.660 | 0.660 |
| 367 | ☒ | ☒ | 1.00 | 0.660 | ☒ | 1.00 | 0.660 | ☒ | 1.0 | 1.0 | 0.660 | 0.660 |
| 368 | ☒ | ☒ | 1.00 | 0.660 | ☒ | 1.00 | 0.660 | ☒ | 1.0 | 1.0 | 0.660 | 0.660 |
| 369 | ☒ | ☒ | 1.00 | 0.660 | ☒ | 1.00 | 0.660 | ☒ | 1.0 | 1.0 | 0.660 | 0.660 |
| 370 | ☒ | ☒ | 1.00 | 0.660 | ☒ | 1.00 | 0.660 | ☒ | 1.0 | 1.0 | 0.660 | 0.660 |
| 371 | ☒ | ☒ | 1.00 | 0.660 | ☒ | 1.00 | 0.660 | ☒ | 1.0 | 1.0 | 0.660 | 0.660 |
| 372 | ☒ | ☒ | 1.00 | 2.780 | ☒ | 1.00 | 2.780 | ☒ | 1.0 | 1.0 | 2.780 | 2.780 |
| 373 | ☒ | ☒ | 1.00 | 1.747 | ☒ | 1.00 | 1.747 | ☒ | 1.0 | 1.0 | 1.747 | 1.747 |
| 460 | ☒ | ☒ | 1.00 | 2.780 | ☒ | 1.00 | 2.780 | ☒ | 1.0 | 1.0 | 2.780 | 2.780 |
| 461 | ☒ | ☒ | 1.00 | 0.510 | ☒ | 1.00 | 0.510 | ☒ | 1.0 | 1.0 | 0.510 | 0.510 |
| 469 | ☒ | ☒ | 1.00 | 2.240 | ☒ | 1.00 | 2.240 | ☐ | 1.0 | 1.0 | 2.240 | 2.240 |
| 470 | ☒ | ☒ | 1.00 | 2.240 | ☒ | 1.00 | 2.240 | ☐ | 1.0 | 1.0 | 2.240 | 2.240 |
| 471 | ☒ | ☒ | 1.00 | 2.240 | ☒ | 1.00 | 2.240 | ☐ | 1.0 | 1.0 | 2.240 | 2.240 |
| 472 | ☒ | ☒ | 1.00 | 2.240 | ☒ | 1.00 | 2.240 | ☐ | 1.0 | 1.0 | 2.240 | 2.240 |
| 474 | ☒ | ☒ | 1.00 | 4.208 | ☒ | 1.00 | 4.208 | ☐ | 1.0 | 1.0 | 4.208 | 4.208 |
| 476 | ☒ | ☒ | 1.00 | 4.208 | ☒ | 1.00 | 4.208 | ☐ | 1.0 | 1.0 | 4.208 | 4.208 |
| 479 | ☒ | ☒ | 1.00 | 4.208 | ☒ | 1.00 | 4.208 | ☐ | 1.0 | 1.0 | 4.208 | 4.208 |
| 480 | ☒ | ☒ | 1.00 | 4.208 | ☒ | 1.00 | 4.208 | ☐ | 1.0 | 1.0 | 4.208 | 4.208 |
| 483 | ☒ | ☒ | 1.00 | 4.208 | ☒ | 1.00 | 4.208 | ☐ | 1.0 | 1.0 | 4.208 | 4.208 |
| 484 | ☒ | ☒ | 1.00 | 4.208 | ☒ | 1.00 | 4.208 | ☐ | 1.0 | 1.0 | 4.208 | 4.208 |
| 487 | ☒ | ☒ | 1.00 | 4.208 | ☒ | 1.00 | 4.208 | ☐ | 1.0 | 1.0 | 4.208 | 4.208 |
| 488 | ☒ | ☒ | 1.00 | 4.208 | ☒ | 1.00 | 4.208 | ☐ | 1.0 | 1.0 | 4.208 | 4.208 |
| 490 | ☒ | ☒ | 1.00 | 3.923 | ☒ | 1.00 | 3.923 | ☐ | 1.0 | 1.0 | 3.923 | 3.923 |
| 492 | ☒ | ☒ | 1.00 | 3.040 | ☒ | 1.00 | 3.040 | ☒ | 1.0 | 1.0 | 3.040 | 3.040 |
| 493 | ☒ | ☒ | 1.00 | 2.780 | ☒ | 1.00 | 2.780 | ☐ | 1.0 | 1.0 | 2.780 | 2.780 |
| 494 | ☒ | ☒ | 1.00 | 3.562 | ☒ | 1.00 | 3.562 | ☐ | 1.0 | 1.0 | 3.562 | 3.562 |
| 495 | ☒ | ☒ | 1.00 | 3.563 | ☒ | 1.00 | 3.563 | ☒ | 1.0 | 1.0 | 3.563 | 3.563 |
| 496 | ☒ | ☒ | 1.00 | 2.785 | ☒ | 1.00 | 2.785 | ☐ | 1.0 | 1.0 | 2.785 | 2.785 |
| 497 | ☒ | ☒ | 1.00 | 3.040 | ☒ | 1.00 | 3.040 | ☐ | 1.0 | 1.0 | 3.040 | 3.040 |
| 498 | ☒ | ☒ | 1.00 | 0.270 | ☒ | 1.00 | 0.270 | ☐ | 1.0 | 1.0 | 0.270 | 0.270 |
| 499 | ☒ | ☒ | 1.00 | 3.563 | ☒ | 1.00 | 3.563 | ☒ | 1.0 | 1.0 | 3.563 | 3.563 |
| 500 | ☒ | ☒ | 1.00 | 3.563 | ☒ | 1.00 | 3.563 | ☒ | 1.0 | 1.0 | 3.563 | 3.563 |
| 501 | ☒ | ☒ | 1.00 | 3.039 | ☒ | 1.00 | 3.039 | ☐ | 1.0 | 1.0 | 3.039 | 3.039 |
| 502 | ☒ | ☒ | 1.00 | 0.271 | ☒ | 1.00 | 0.271 | ☐ | 1.0 | 1.0 | 0.271 | 0.271 |
| 503 | ☒ | ☒ | 1.00 | 3.039 | ☒ | 1.00 | 3.039 | ☐ | 1.0 | 1.0 | 3.039 | 3.039 |

## 1.5 EFFECTIVE LENGTHS - MEMBERS

| Member No. | Buckling Possible | Buckling About Axis y Possible | $k_{cr,y}$ | $L_{cr,y}$ [m] | Buckling About Axis z Possible | $k_{cr,z}$ | $L_{cr,z}$ [m] | Lateral-Torsional Buckling Possible | $k_z$ | $k_w$ | $L_w$ [m] | $L_T$ [m] |
|---|---|---|---|---|---|---|---|---|---|---|---|---|
| 504 | ☒ | ☒ | 1.00 | 0.271 | ☒ | 1.00 | 0.271 | ☐ | 1.0 | 1.0 | 0.271 | 0.271 |
| 505 | ☒ | ☒ | 1.00 | 3.039 | ☒ | 1.00 | 3.039 | ☐ | 1.0 | 1.0 | 3.039 | 3.039 |
| 506 | ☒ | ☒ | 1.00 | 0.271 | ☒ | 1.00 | 0.271 | ☐ | 1.0 | 1.0 | 0.271 | 0.271 |
| 507 | ☒ | ☒ | 1.00 | 4.522 | ☒ | 1.00 | 4.522 | ☐ | 1.0 | 1.0 | 4.522 | 4.522 |
| 508 | ☒ | ☒ | 1.00 | 4.522 | ☒ | 1.00 | 4.522 | ☐ | 1.0 | 1.0 | 4.522 | 4.522 |
| 509 | ☒ | ☒ | 1.00 | 5.559 | ☒ | 1.00 | 5.559 | ☐ | 1.0 | 1.0 | 5.559 | 5.559 |
| 510 | ☒ | ☒ | 1.00 | 5.559 | ☒ | 1.00 | 5.559 | ☐ | 1.0 | 1.0 | 5.559 | 5.559 |
| 511 | ☒ | ☒ | 1.00 | 5.559 | ☒ | 1.00 | 5.559 | ☐ | 1.0 | 1.0 | 5.559 | 5.559 |
| 512 | ☒ | ☒ | 1.00 | 5.559 | ☒ | 1.00 | 5.559 | ☐ | 1.0 | 1.0 | 5.559 | 5.559 |
| 513 | ☒ | ☒ | 1.00 | 6.241 | ☒ | 1.00 | 6.241 | ☐ | 1.0 | 1.0 | 6.241 | 6.241 |
| 514 | ☒ | ☒ | 1.00 | 6.241 | ☒ | 1.00 | 6.241 | ☐ | 1.0 | 1.0 | 6.241 | 6.241 |
| 515 | ☒ | ☒ | 1.00 | 6.745 | ☒ | 1.00 | 6.745 | ☐ | 1.0 | 1.0 | 6.745 | 6.745 |
| 516 | ☒ | ☒ | 1.00 | 6.745 | ☒ | 1.00 | 6.745 | ☐ | 1.0 | 1.0 | 6.745 | 6.745 |
| 517 | ☒ | ☒ | 1.00 | 4.522 | ☒ | 1.00 | 4.522 | ☐ | 1.0 | 1.0 | 4.522 | 4.522 |
| 518 | ☒ | ☒ | 1.00 | 4.522 | ☒ | 1.00 | 4.522 | ☐ | 1.0 | 1.0 | 4.522 | 4.522 |
| 519 | ☒ | ☒ | 1.00 | 4.522 | ☒ | 1.00 | 4.522 | ☐ | 1.0 | 1.0 | 4.522 | 4.522 |
| 520 | ☒ | ☒ | 1.00 | 4.522 | ☒ | 1.00 | 4.522 | ☐ | 1.0 | 1.0 | 4.522 | 4.522 |
| 521 | ☒ | ☒ | 1.00 | 4.522 | ☒ | 1.00 | 4.522 | ☐ | 1.0 | 1.0 | 4.522 | 4.522 |
| 522 | ☒ | ☒ | 1.00 | 4.522 | ☒ | 1.00 | 4.522 | ☐ | 1.0 | 1.0 | 4.522 | 4.522 |
| 523 | ☒ | ☒ | 1.00 | 1.610 | ☒ | 1.00 | 1.610 | ☒ | 1.0 | 1.0 | 1.610 | 1.610 |
| 524 | ☒ | ☒ | 1.00 | 1.610 | ☒ | 1.00 | 1.610 | ☐ | 1.0 | 1.0 | 1.610 | 1.610 |
| 525 | ☒ | ☒ | 1.00 | 1.610 | ☒ | 1.00 | 1.610 | ☒ | 1.0 | 1.0 | 1.610 | 1.610 |
| 526 | ☒ | ☒ | 1.00 | 2.225 | ☒ | 1.00 | 2.225 | ☒ | 1.0 | 1.0 | 2.225 | 2.225 |
| 527 | ☒ | ☒ | 1.00 | 1.200 | ☒ | 1.00 | 1.200 | ☒ | 1.0 | 1.0 | 1.200 | 1.200 |
| 528 | ☒ | ☒ | 1.00 | 2.119 | ☒ | 1.00 | 2.119 | ☐ | 1.0 | 1.0 | 2.119 | 2.119 |

## 2.2 DESIGN BY CROSS-SECTION

| Sect. No. | Member No. | Location x [m] | LC/CO/ RC | Design | | Equation No. | Description |
|---|---|---|---|---|---|---|---|
| 1 | **IF HE A 240-15 \| Euronorm 53-62** | | | | | | |
| | 231 | 0.000 | EK10 | 0.04 | ≤ 1 | CS102) | Cross-section check - Compression acc. to 6.2.4 |
| | 231 | 0.000 | EK10 | 0.01 | ≤ 1 | CS122) | Cross-section check - Shear force in z-axis acc. to 6.2.6(4) - Class 3 or 4 |
| | 231 | 0.000 | EK10 | 0.01 | ≤ 1 | CS124) | Cross-section check - Shear force in y-axis acc. to 6.2.6(4) - Class 3 or 4 |
| | 231 | 8.060 | EK10 | 0.21 | ≤ 1 | CS183) | Cross-section check - Bending, shear and axial force acc. to 6.2.9.2 - Class 3 - General cross-section |
| | 231 | 0.000 | EK10 | 0.33 | ≤ 1 | CS203) | Cross-section check - Bending about z-axis, shear and axial force acc. to 6.2.9.2 - Class 3 - General cross-section |
| | 231 | 0.000 | EK10 | 0.35 | ≤ 1 | CS223) | Cross-section check - Biaxial bending, shear and axial force acc. to 6.2.10 and 6.2.9 - Class 3 - General cross-section |
| | 231 | 0.000 | EK10 | 0.58 | ≤ 1 | ST354) | Stability analysis - Bending and compression acc. to 6.3.3, Method 1 |
| 2 | **HE A 200 \| Euronorm 53-62** | | | | | | |
| | 1 | 7.890 | EK10 | 0.06 | ≤ 1 | CS101) | Cross-section check - Tension acc. to 6.2.3 |
| | 1 | 3.381 | EK10 | 0.00 | ≤ 1 | CS121) | Cross-section check - Shear force in z-axis acc. to 6.2.6 |
| | 1 | 0.000 | EK10 | 0.00 | ≤ 1 | CS126) | Cross-section check - Shear buckling acc. to 6.2.6(6) |
| | 1 | 4.509 | EK10 | 0.03 | ≤ 1 | CS181) | Cross-section check - Bending, shear and axial force acc. to 6.2.9.1 |
| | 1 | 6.763 | EK10 | 0.05 | ≤ 1 | CS201) | Cross-section check - Bending about z-axis, shear and axial force acc. to 6.2.9.1 |
| | 1 | 7.890 | EK10 | 0.07 | ≤ 1 | CS221) | Cross-section check - Biaxial bending, shear and axial force acc. to 6.2.10 and 6.2.9 |
| | 1 | 4.509 | EK10 | 0.13 | ≤ 1 | ST363) | Stability analysis - Biaxial bending acc. to 6.3.3, Method 2 |
| 3 | **HE B 200 \| Euronorm 53-62** | | | | | | |
| | 10 | 0.000 | EK10 | 0.00 | ≤ 1 | CS100) | Negligible internal forces |
| | 34 | 0.000 | EK10 | 0.06 | ≤ 1 | CS102) | Cross-section check - Compression acc. to 6.2.4 |
| | 34 | 0.000 | EK10 | 0.02 | ≤ 1 | CS121) | Cross-section check - Shear force in z-axis acc. to 6.2.6 |
| | 4 | 0.000 | EK10 | 0.00 | ≤ 1 | CS126) | Cross-section check - Shear buckling acc. to 6.2.6(6) |
| | 34 | 0.554 | EK10 | 0.08 | ≤ 1 | CS181) | Cross-section check - Bending, shear and axial force acc. to 6.2.9.1 |
| | 4 | 0.000 | EK10 | 0.03 | ≤ 1 | CS221) | Cross-section check - Biaxial bending, shear and axial force acc. to 6.2.10 and 6.2.9 |
| | 34 | 0.000 | EK10 | 0.19 | ≤ 1 | ST364) | Stability analysis - Bending and compression acc. to 6.3.3, Method 2 |
| 4 | **IF IPE 400-6 \| Euronorm 19-57** | | | | | | |
| | 252 | 2.016 | EK10 | 0.00 | ≤ 1 | CS100) | Negligible internal forces |
| | 175 | 0.000 | EK10 | 0.02 | ≤ 1 | CS102) | Cross-section check - Compression acc. to 6.2.4 |
| | 268 | 1.393 | EK10 | 0.03 | ≤ 1 | CS103) | Cross-section check - Compression acc. to 6.2.4 - Class 4 |
| | 292 | 0.000 | EK10 | 0.06 | ≤ 1 | CS112) | Cross-section check - Bending about y-axis acc. to 6.2.5 - Class 3 |
| | 273 | 3.179 | EK10 | 0.00 | ≤ 1 | CS113) | Cross-section check - Bending about y-axis acc. to 6.2.5 - Class 4 |
| | 292 | 3.815 | EK10 | 0.00 | ≤ 1 | CS118) | Cross-section check - Bending about z-axis acc. to 6.2.5 - Class 4 |
| | 258 | 2.785 | EK10 | 0.06 | ≤ 1 | CS122) | Cross-section check - Shear force in z-axis acc. to 6.2.6(4) - Class 3 or 4 |
| | 196 | 1.764 | EK10 | 0.01 | ≤ 1 | CS124) | Cross-section check - Shear force in y-axis acc. to 6.2.6(4) - Class 3 or 4 |
| | 292 | 0.000 | EK10 | 0.06 | ≤ 1 | CS143) | Cross-section check - Bending and shear force acc. to 6.2.9.2 and 6.2.10 - Class 3 - General cross-section |
| | 273 | 3.179 | EK10 | 0.00 | ≤ 1 | CS145) | Cross-section check - Bending and shear force acc. to 6.2.9.3 and 6.2.10 - Class 4 |
| | 292 | 3.815 | EK10 | 0.00 | ≤ 1 | CS155) | Cross-section check - Bending about z-axis and shear f |

## 2.2 DESIGN BY CROSS-SECTION

| Sect. No. | Member No. | Location x [m] | LC/CO/ RC | Design | | Equation No. | Description |
|---|---|---|---|---|---|---|---|
| | | | | | | | force acc. to 6.2.9.3 and 6.2.10 - Class 4 |
| | 292 | 0.000 | EK10 | 0.08 | ≤ 1 | CS163) | Cross-section check - Biaxial bending and shear force acc. to 6.2.9.2 and 6.2.10 - Class 3 - General cross-section |
| | 292 | 0.000 | EK10 | 0.09 | ≤ 1 | CS165) | Cross-section check - Biaxial bending and shear force acc. to 6.2.9.3 and 6.2.10 - Class 4 |
| | 258 | 0.000 | EK10 | 0.24 | ≤ 1 | CS183) | Cross-section check - Bending, shear and axial force acc. to 6.2.9.2 - Class 3 - General cross-section |
| | 268 | 0.000 | EK10 | 0.07 | ≤ 1 | CS191) | Cross-section check - Bending, shear and axial force acc. to 6.2.9.3 - Class 4 |
| | 196 | 1.764 | EK10 | 0.05 | ≤ 1 | CS211) | Cross-section check - Bending about z-axis, shear and axial force acc. to 6.2.9.3 - Class 4 |
| | 175 | 2.785 | EK10 | 0.24 | ≤ 1 | CS223) | Cross-section check - Biaxial bending, shear and axial force acc. to 6.2.10 and 6.2.9 - Class 3 - General cross-section |
| | 27 | 4.268 | EK10 | 0.12 | ≤ 1 | CS231) | Cross-section check - Biaxial bending, shear and axial force acc. to 6.2.10 and 6.2.9.3 - Class 4 |
| | 258 | 0.000 | EK10 | 0.29 | ≤ 1 | ST354) | Stability analysis - Bending and compression acc. to 6.3.3, Method 1 |
| 5 | **RO 168.3x6.3 \| EN 10219-2:2006** | | | | | | |
| | 295 | 0.000 | EK10 | 0.12 | ≤ 1 | CS101) | Cross-section check - Tension acc. to 6.2.3 |
| | 260 | 0.000 | EK10 | 0.00 | ≤ 1 | CS121) | Cross-section check - Shear force in z-axis acc. to 6.2.6 |
| | 294 | 4.406 | EK10 | 0.06 | ≤ 1 | CS181) | Cross-section check - Bending, shear and axial force acc. to 6.2.9.1 |
| 6 | **HE B 260 \| Euronorm 53-62** | | | | | | |
| | 352 | 0.100 | EK10 | 0.03 | ≤ 1 | CS101) | Cross-section check - Tension acc. to 6.2.3 |
| | 67 | 0.000 | EK10 | 0.05 | ≤ 1 | CS102) | Cross-section check - Compression acc. to 6.2.4 |
| | 288 | 0.492 | EK10 | 0.12 | ≤ 1 | CS121) | Cross-section check - Shear force in z-axis acc. to 6.2.6 |
| | 492 | 0.000 | EK10 | 0.01 | ≤ 1 | CS123) | Cross-section check - Shear force in y-axis acc. to 6.2.6 |
| | 62 | 0.000 | EK10 | 0.00 | ≤ 1 | CS126) | Cross-section check - Shear buckling acc. to 6.2.6(6) |
| | 492 | 0.000 | EK10 | 0.18 | ≤ 1 | CS161) | Cross-section check - Biaxial bending and shear force acc. to 6.2.6, 6.2.7 and 6.2.9 |
| | 67 | 0.000 | EK10 | 0.17 | ≤ 1 | CS181) | Cross-section check - Bending, shear and axial force acc. to 6.2.9.1 |
| | 62 | 4.472 | EK10 | 0.15 | ≤ 1 | CS201) | Cross-section check - Bending about z-axis, shear and axial force acc. to 6.2.9.1 |
| | 62 | 5.590 | EK10 | 0.24 | ≤ 1 | CS221) | Cross-section check - Biaxial bending, shear and axial force acc. to 6.2.10 and 6.2.9 |
| | 62 | 2.795 | EK10 | 0.50 | ≤ 1 | ST363) | Stability analysis - Biaxial bending acc. to 6.3.3, Method 2 |
| | 62 | 0.000 | EK10 | 0.56 | ≤ 1 | ST364) | Stability analysis - Bending and compression acc. to 6.3.3, Method 2 |
| 7 | **HE A 240 \| Euronorm 53-62** | | | | | | |
| | 213 | 3.140 | EK10 | 0.06 | ≤ 1 | CS101) | Cross-section check - Tension acc. to 6.2.3 |
| | 86 | 0.000 | EK10 | 0.06 | ≤ 1 | CS102) | Cross-section check - Compression acc. to 6.2.4 |
| | 213 | 3.140 | EK10 | 0.28 | ≤ 1 | CS116) | Cross-section check - Bending about z-axis acc. to 6.2.5 - Class 1 or 2 |
| | 86 | 0.000 | EK10 | 0.06 | ≤ 1 | CS121) | Cross-section check - Shear force in z-axis acc. to 6.2.6 |
| | 86 | 0.000 | EK10 | 0.01 | ≤ 1 | CS123) | Cross-section check - Shear force in y-axis acc. to 6.2.6 |
| | 86 | 0.000 | EK10 | 0.00 | ≤ 1 | CS126) | Cross-section check - Shear buckling acc. to 6.2.6(6) |
| | 213 | 3.140 | EK10 | 0.28 | ≤ 1 | CS151) | Cross-section check - Bending about z-axis and shear force acc. to 6.2.5 and 6.2.8 |
| | 213 | 3.140 | EK10 | 0.29 | ≤ 1 | CS161) | Cross-section check - Biaxial bending and shear force acc. to 6.2.6, 6.2.7 and 6.2.9 |
| | 213 | 3.140 | EK10 | 0.09 | ≤ 1 | CS181) | Cross-section check - Bending, shear and axial force acc. to 6.2.9.1 |
| | 86 | 2.490 | EK10 | 0.12 | ≤ 1 | CS201) | Cross-section check - Bending about z-axis, shear and axial force acc. to 6.2.9.1 |
| | 86 | 0.000 | EK10 | 0.34 | ≤ 1 | CS221) | Cross-section check - Biaxial bending, shear and axial force acc. to 6.2.10 and 6.2.9 |
| | 86 | 0.000 | EK10 | 0.72 | ≤ 1 | ST363) | Stability analysis - Biaxial bending acc. to 6.3.3, Method 2 |
| | 86 | 0.000 | EK10 | 0.86 | ≤ 1 | ST364) | Stability analysis - Bending and compression acc. to 6.3.3, Method 2 |
| 8 | **HE A 300 \| Euronorm 53-62** | | | | | | |
| | 87 | 0.000 | EK10 | 0.10 | ≤ 1 | CS102) | Cross-section check - Compression acc. to 6.2.4 |
| | 87 | 0.000 | EK10 | 0.08 | ≤ 1 | CS121) | Cross-section check - Shear force in z-axis acc. to 6.2.6 |
| | 87 | 0.000 | EK10 | 0.02 | ≤ 1 | CS123) | Cross-section check - Shear force in y-axis acc. to 6.2.6 |
| | 87 | 0.000 | EK10 | 0.00 | ≤ 1 | CS126) | Cross-section check - Shear buckling acc. to 6.2.6(6) |
| | 87 | 0.000 | EK10 | 0.52 | ≤ 1 | CS181) | Cross-section check - Bending, shear and axial force acc. to 6.2.9.1 |
| | 87 | 1.245 | EK10 | 0.19 | ≤ 1 | CS201) | Cross-section check - Bending about z-axis, shear and axial force acc. to 6.2.9.1 |
| | 87 | 0.000 | EK10 | 0.37 | ≤ 1 | CS221) | Cross-section check - Biaxial bending, shear and axial force acc. to 6.2.10 and 6.2.9 |
| | 87 | 0.000 | EK10 | 1.04 | > 1 | ST364) | Stability analysis - Bending and compression acc. to 6.3.3, Method 2 |
| 9 | **IPE 200 \| Euronorm 19-57** | | | | | | |
| | 95 | 2.240 | EK10 | 0.01 | ≤ 1 | CS101) | Cross-section check - Tension acc. to 6.2.3 |
| | 95 | 0.000 | EK10 | 0.01 | ≤ 1 | CS102) | Cross-section check - Compression acc. to 6.2.4 |
| | 183 | 0.066 | EK10 | 0.13 | ≤ 1 | CS111) | Cross-section check - Bending about y-axis acc. to 6.2.5 - Class 1 or 2 |
| | 66 | 2.240 | EK10 | 0.13 | ≤ 1 | CS116) | Cross-section check - Bending about z-axis acc. to 6.2.5 - Class 1 or 2 |
| | 181 | 0.000 | EK10 | 0.06 | ≤ 1 | CS121) | Cross-section check - Shear force in z-axis acc. to 6.2.6 |
| | 177 | 0.000 | EK10 | 0.01 | ≤ 1 | CS123) | Cross-section check - Shear force in y-axis acc. to 6.2.6 |
| | 52 | 0.000 | EK10 | 0.00 | ≤ 1 | CS126) | Cross-section check - Shear buckling acc. to 6.2.6(6) |
| | 183 | 0.066 | EK10 | 0.13 | ≤ 1 | CS141) | Cross-section check - Bending and shear force acc. to 6.2.5 and 6.2.8 |

## 2.2 DESIGN BY CROSS-SECTION

| Sect. No. | Member No. | Location x [m] | LC/CO/ RC | Design | | Equation No. | Description |
|---|---|---|---|---|---|---|---|
| | 66 | 2.240 | EK10 | 0.13 | ≤ 1 | CS151) | Cross-section check - Bending about z-axis and shear force acc. to 6.2.5 and 6.2.8 |
| | 66 | 0.000 | EK10 | 0.16 | ≤ 1 | CS161) | Cross-section check - Biaxial bending and shear force acc. to 6.2.6, 6.2.7 and 6.2.9 |
| | 93 | 0.000 | EK10 | 0.28 | ≤ 1 | CS181) | Cross-section check - Bending, shear and axial force acc. to 6.2.9.1 |
| | 69 | 0.632 | EK10 | 0.07 | ≤ 1 | CS201) | Cross-section check - Bending about z-axis, shear and axial force acc. to 6.2.9.1 |
| | 52 | 0.000 | EK10 | 0.13 | ≤ 1 | CS221) | Cross-section check - Biaxial bending, shear and axial force acc. to 6.2.10 and 6.2.9 |
| | 93 | 0.000 | EK10 | 0.38 | ≤ 1 | ST363) | Stability analysis - Biaxial bending acc. to 6.3.3, Method 2 |
| | 95 | 0.000 | EK10 | 0.25 | ≤ 1 | ST364) | Stability analysis - Bending and compression acc. to 6.3.3, Method 2 |
| 10 | **IPE 200 \| Euronorm 19-57** | | | | | | |
| | 500 | 0.000 | EK10 | 0.02 | ≤ 1 | CS101) | Cross-section check - Tension acc. to 6.2.3 |
| | 500 | 0.000 | EK10 | 0.03 | ≤ 1 | CS102) | Cross-section check - Compression acc. to 6.2.4 |
| | 121 | 3.562 | EK10 | 0.31 | ≤ 1 | CS111) | Cross-section check - Bending about y-axis acc. to 6.2.5 - Class 1 or 2 |
| | 103 | 0.000 | EK10 | 0.10 | ≤ 1 | CS116) | Cross-section check - Bending about z-axis acc. to 6.2.5 - Class 1 or 2 |
| | 121 | 3.562 | EK10 | 0.05 | ≤ 1 | CS121) | Cross-section check - Shear force in z-axis acc. to 6.2.6 |
| | 103 | 0.000 | EK10 | 0.00 | ≤ 1 | CS123) | Cross-section check - Shear force in y-axis acc. to 6.2.6 |
| | 29 | 0.000 | EK10 | 0.00 | ≤ 1 | CS126) | Cross-section check - Shear buckling acc. to 6.2.6(6) |
| | 121 | 3.562 | EK10 | 0.31 | ≤ 1 | CS141) | Cross-section check - Bending and shear force acc. to 6.2.5 and 6.2.8 |
| | 103 | 0.000 | EK10 | 0.10 | ≤ 1 | CS151) | Cross-section check - Bending about z-axis and shear force acc. to 6.2.5 and 6.2.8 |
| | 103 | 3.220 | EK10 | 0.09 | ≤ 1 | CS161) | Cross-section check - Biaxial bending and shear force acc. to 6.2.6, 6.2.7 and 6.2.9 |
| | 121 | 3.562 | EK10 | 0.33 | ≤ 1 | CS181) | Cross-section check - Bending, shear and axial force acc. to 6.2.9.1 |
| | 51 | 3.562 | EK10 | 0.09 | ≤ 1 | CS201) | Cross-section check - Bending about z-axis, shear and axial force acc. to 6.2.9.1 |
| | 80 | 3.563 | EK10 | 0.11 | ≤ 1 | CS221) | Cross-section check - Biaxial bending, shear and axial force acc. to 6.2.10 and 6.2.9 |
| | 110 | 3.562 | EK10 | 0.01 | ≤ 1 | ST301) | Stability analysis - Flexural buckling about y-axis acc. to 6.3.1.1 and 6.3.1.2(4) |
| | 219 | 0.000 | EK10 | 0.02 | ≤ 1 | ST311) | Stability analysis - Flexural buckling about z-axis acc. to 6.3.1.1 and 6.3.1.2(4) |
| | 110 | 3.562 | EK10 | 0.06 | ≤ 1 | ST312) | Stability analysis - Flexural buckling about z-axis acc. to 6.3.1.1 and 6.3.1.2 |
| | 110 | 3.562 | EK10 | 0.02 | ≤ 1 | ST321) | Stability analysis - Torsional buckling acc. to 6.3.1.4 and 6.3.1.2(4) |
| | 80 | 3.563 | EK10 | 0.39 | ≤ 1 | ST331) | Stability analysis - Lateral torsional buckling acc. to 6.3.2.1 and 6.3.2.3 - I-Section |
| | 121 | 0.000 | EK10 | 0.43 | ≤ 1 | ST363) | Stability analysis - Biaxial bending acc. to 6.3.3, Method 2 |
| | 500 | 0.000 | EK10 | 0.57 | ≤ 1 | ST364) | Stability analysis - Bending and compression acc. to 6.3.3, Method 2 |
| 11 | **IPE 300 \| Euronorm 19-57** | | | | | | |
| | 47 | 0.000 | EK10 | 0.01 | ≤ 1 | CS101) | Cross-section check - Tension acc. to 6.2.3 |
| | 48 | 0.000 | EK10 | 0.01 | ≤ 1 | CS102) | Cross-section check - Compression acc. to 6.2.4 |
| | 36 | 2.375 | EK10 | 0.54 | ≤ 1 | CS111) | Cross-section check - Bending about y-axis acc. to 6.2.5 - Class 1 or 2 |
| | 155 | 0.525 | EK10 | 0.20 | ≤ 1 | CS121) | Cross-section check - Shear force in z-axis acc. to 6.2.6 |
| | 316 | 0.712 | EK10 | 0.18 | ≤ 1 | CS122) | Cross-section check - Shear force in z-axis acc. to 6.2.6(4) - Class 3 or 4 |
| | 155 | 0.000 | EK10 | 0.00 | ≤ 1 | CS123) | Cross-section check - Shear force in y-axis acc. to 6.2.6 |
| | 35 | 0.000 | EK10 | 0.00 | ≤ 1 | CS126) | Cross-section check - Shear buckling acc. to 6.2.6(6) |
| | 36 | 2.375 | EK10 | 0.54 | ≤ 1 | CS141) | Cross-section check - Bending and shear force acc. to 6.2.5 and 6.2.8 |
| | 155 | 0.525 | EK10 | 0.14 | ≤ 1 | CS161) | Cross-section check - Biaxial bending and shear force acc. to 6.2.6, 6.2.7 and 6.2.9 |
| | 316 | 2.375 | EK10 | 0.62 | ≤ 1 | CS181) | Cross-section check - Bending, shear and axial force acc. to 6.2.9.1 |
| | 150 | 1.663 | EK10 | 0.03 | ≤ 1 | CS182) | Cross-section check - Bending, shear and axial force acc. to 6.2.9.2 - Class 3 |
| | 155 | 0.525 | EK10 | 0.25 | ≤ 1 | CS221) | Cross-section check - Biaxial bending, shear and axial force acc. to 6.2.10 and 6.2.9 |
| | 48 | 0.925 | EK10 | 0.02 | ≤ 1 | CS222) | Cross-section check - Biaxial bending, shear and axial force acc. to 6.2.10 and 6.2.9 - Class 3 |
| | 316 | 2.375 | EK10 | 0.65 | ≤ 1 | ST331) | Stability analysis - Lateral torsional buckling acc. to 6.3.2.1 and 6.3.2.3 - I-Section |
| | 155 | 0.000 | EK10 | 0.50 | ≤ 1 | ST363) | Stability analysis - Biaxial bending acc. to 6.3.3, Method 2 |
| | 48 | 0.370 | EK10 | 0.51 | ≤ 1 | ST364) | Stability analysis - Bending and compression acc. to 6.3.3, Method 2 |
| 12 | **IPE 240 \| Euronorm 19-57** | | | | | | |
| | 338 | 0.000 | EK10 | 0.01 | ≤ 1 | CS101) | Cross-section check - Tension acc. to 6.2.3 |
| | 50 | 0.000 | EK10 | 0.02 | ≤ 1 | CS102) | Cross-section check - Compression acc. to 6.2.4 |
| | 3 | 2.375 | EK10 | 0.65 | ≤ 1 | CS111) | Cross-section check - Bending about y-axis acc. to 6.2.5 - Class 1 or 2 |
| | 336 | 1.872 | EK10 | 0.03 | ≤ 1 | CS116) | Cross-section check - Bending about z-axis acc. to 6.2.5 - Class 1 or 2 |
| | 338 | 0.000 | EK10 | 0.25 | ≤ 1 | CS121) | Cross-section check - Shear force in z-axis acc. to 6.2.6 |
| | 338 | 0.000 | EK10 | 0.03 | ≤ 1 | CS123) | Cross-section check - Shear force in y-axis acc. to 6.2.6 |
| | 3 | 0.000 | EK10 | 0.00 | ≤ 1 | CS126) | Cross-section check - Shear buckling acc. to 6.2.6(6) |
| | 3 | 2.375 | EK10 | 0.65 | ≤ 1 | CS141) | Cross-section check - Bending and shear force acc. to 6.2.5 and 6.2.8 |
| | 336 | 1.872 | EK10 | 0.03 | ≤ 1 | CS151) | Cross-section check - Bending about z-axis and shear f |

## 2.2 DESIGN BY CROSS-SECTION

| Sect. No. | Member No. | Location x [m] | LC/CO/ RC | Design | | Equation No. | Description |
|---|---|---|---|---|---|---|---|
| | | | | | | | force acc. to 6.2.5 and 6.2.8 |
| | 338 | 0.525 | EK10 | 0.23 | ≤ 1 | CS161) | Cross-section check - Biaxial bending and shear force acc. to 6.2.6, 6.2.7 and 6.2.9 |
| | 320 | 2.375 | EK10 | 0.44 | ≤ 1 | CS181) | Cross-section check - Bending, shear and axial force acc. to 6.2.9.1 |
| | 336 | 1.872 | EK10 | 0.03 | ≤ 1 | CS201) | Cross-section check - Bending about z-axis, shear and axial force acc. to 6.2.9.1 |
| | 214 | 0.000 | EK10 | 0.33 | ≤ 1 | CS221) | Cross-section check - Biaxial bending, shear and axial force acc. to 6.2.10 and 6.2.9 |
| | 3 | 2.375 | EK10 | 0.70 | ≤ 1 | ST331) | Stability analysis - Lateral torsional buckling acc. to 6.3.2.1 and 6.3.2.3 - I-Section |
| | 214 | 0.000 | EK10 | 0.59 | ≤ 1 | ST363) | Stability analysis - Biaxial bending acc. to 6.3.3, Method 2 |
| | 338 | 0.000 | EK10 | 0.55 | ≤ 1 | ST364) | Stability analysis - Bending and compression acc. to 6.3.3, Method 2 |
| 13 | **RO 101.6x3 \| EN 10219-2:2006** | | | | | | |
| | 287 | 0.000 | EK10 | 0.08 | ≤ 1 | CS101) | Cross-section check - Tension acc. to 6.2.3 |
| | 287 | 0.000 | EK10 | 0.08 | ≤ 1 | CS102) | Cross-section check - Compression acc. to 6.2.4 |
| | 297 | 5.265 | EK10 | 0.10 | ≤ 1 | CS111) | Cross-section check - Bending about y-axis acc. to 6.2.5 - Class 1 or 2 |
| | 312 | 0.000 | EK10 | 0.01 | ≤ 1 | CS121) | Cross-section check - Shear force in z-axis acc. to 6.2.6 |
| | 297 | 5.265 | EK10 | 0.10 | ≤ 1 | CS141) | Cross-section check - Bending and shear force acc. to 6.2.5 and 6.2.8 |
| | 312 | 4.602 | EK10 | 0.04 | ≤ 1 | CS161) | Cross-section check - Biaxial bending and shear force acc. to 6.2.6, 6.2.7 and 6.2.9 |
| | 297 | 5.265 | EK10 | 0.10 | ≤ 1 | CS181) | Cross-section check - Bending, shear and axial force acc. to 6.2.9.1 |
| | 207 | 0.000 | EK10 | 0.04 | ≤ 1 | CS221) | Cross-section check - Biaxial bending, shear and axial force acc. to 6.2.10 and 6.2.9 |
| | 203 | 3.562 | EK10 | 0.05 | ≤ 1 | ST301) | Stability analysis - Flexural buckling about y-axis acc. to 6.3.1.1 and 6.3.1.2(4) |
| | 284 | 0.000 | EK10 | 0.57 | ≤ 1 | ST302) | Stability analysis - Flexural buckling about y-axis acc. to 6.3.1.1 and 6.3.1.2 |
| | 203 | 3.562 | EK10 | 0.05 | ≤ 1 | ST311) | Stability analysis - Flexural buckling about z-axis acc. to 6.3.1.1 and 6.3.1.2(4) |
| | 284 | 0.000 | EK10 | 0.57 | ≤ 1 | ST312) | Stability analysis - Flexural buckling about z-axis acc. to 6.3.1.1 and 6.3.1.2 |
| | 284 | 1.188 | EK10 | 0.64 | ≤ 1 | ST364) | Stability analysis - Bending and compression acc. to 6.3.3, Method 2 |
| 14 | **IPE 180 \| Euronorm 19-57** | | | | | | |
| | 333 | 0.000 | EK10 | 0.01 | ≤ 1 | CS101) | Cross-section check - Tension acc. to 6.2.3 |
| | 333 | 0.000 | EK10 | 0.01 | ≤ 1 | CS102) | Cross-section check - Compression acc. to 6.2.4 |
| | 323 | 1.910 | EK10 | 0.54 | ≤ 1 | CS111) | Cross-section check - Bending about y-axis acc. to 6.2.5 - Class 1 or 2 |
| | 323 | 0.000 | EK10 | 0.14 | ≤ 1 | CS121) | Cross-section check - Shear force in z-axis acc. to 6.2.6 |
| | 317 | 0.000 | EK10 | 0.00 | ≤ 1 | CS126) | Cross-section check - Shear buckling acc. to 6.2.6(6) |
| | 323 | 1.910 | EK10 | 0.54 | ≤ 1 | CS141) | Cross-section check - Bending and shear force acc. to 6.2.5 and 6.2.8 |
| | 332 | 1.910 | EK10 | 0.54 | ≤ 1 | CS181) | Cross-section check - Bending, shear and axial force acc. to 6.2.9.1 |
| | 323 | 1.910 | EK10 | 1.33 | > 1 | ST331) | Stability analysis - Lateral torsional buckling acc. to 6.3.2.1 and 6.3.2.3 - I-Section |
| 15 | **IPE 180 \| Euronorm 19-57** | | | | | | |
| | 157 | 0.000 | EK10 | 0.01 | ≤ 1 | CS101) | Cross-section check - Tension acc. to 6.2.3 |
| | 361 | 0.000 | EK10 | 0.01 | ≤ 1 | CS102) | Cross-section check - Compression acc. to 6.2.4 |
| | 137 | 0.000 | EK10 | 0.34 | ≤ 1 | CS111) | Cross-section check - Bending about y-axis acc. to 6.2.5 - Class 1 or 2 |
| | 154 | 0.000 | EK10 | 0.01 | ≤ 1 | CS116) | Cross-section check - Bending about z-axis acc. to 6.2.5 - Class 1 or 2 |
| | 137 | 0.000 | EK10 | 0.15 | ≤ 1 | CS121) | Cross-section check - Shear force in z-axis acc. to 6.2.6 |
| | 156 | 0.812 | EK10 | 0.00 | ≤ 1 | CS123) | Cross-section check - Shear force in y-axis acc. to 6.2.6 |
| | 73 | 0.000 | EK10 | 0.00 | ≤ 1 | CS126) | Cross-section check - Shear buckling acc. to 6.2.6(6) |
| | 137 | 0.000 | EK10 | 0.34 | ≤ 1 | CS141) | Cross-section check - Bending and shear force acc. to 6.2.5 and 6.2.8 |
| | 154 | 0.000 | EK10 | 0.01 | ≤ 1 | CS151) | Cross-section check - Bending about z-axis and shear force acc. to 6.2.5 and 6.2.8 |
| | 360 | 0.000 | EK10 | 0.04 | ≤ 1 | CS161) | Cross-section check - Biaxial bending and shear force acc. to 6.2.6, 6.2.7 and 6.2.9 |
| | 126 | 0.000 | EK10 | 0.29 | ≤ 1 | CS181) | Cross-section check - Bending, shear and axial force acc. to 6.2.9.1 |
| | 156 | 0.000 | EK10 | 0.02 | ≤ 1 | CS201) | Cross-section check - Bending about z-axis, shear and axial force acc. to 6.2.9.1 |
| | 156 | 0.000 | EK10 | 0.05 | ≤ 1 | CS221) | Cross-section check - Biaxial bending, shear and axial force acc. to 6.2.10 and 6.2.9 |
| | 137 | 0.000 | EK10 | 0.34 | ≤ 1 | ST331) | Stability analysis - Lateral torsional buckling acc. to 6.3.2.1 and 6.3.2.3 - I-Section |
| | 156 | 0.000 | EK10 | 0.20 | ≤ 1 | ST363) | Stability analysis - Biaxial bending acc. to 6.3.3, Method 2 |
| | 361 | 0.000 | EK10 | 0.07 | ≤ 1 | ST364) | Stability analysis - Bending and compression acc. to 6.3.3, Method 2 |
| 16 | **QRO 80x4 \| EN 10219-2:2006** | | | | | | |
| | 85 | 0.000 | EK10 | 0.00 | ≤ 1 | CS100) | Negligible internal forces |
| | 84 | 0.000 | EK10 | 0.01 | ≤ 1 | CS101) | Cross-section check - Tension acc. to 6.2.3 |
| | 84 | 2.240 | EK10 | 0.01 | ≤ 1 | CS102) | Cross-section check - Compression acc. to 6.2.4 |
| | 189 | 1.393 | EK10 | 0.10 | ≤ 1 | CS111) | Cross-section check - Bending about y-axis acc. to 6.2.5 - Class 1 or 2 |
| | 189 | 0.000 | EK10 | 0.01 | ≤ 1 | CS116) | Cross-section check - Bending about z-axis acc. to 6.2.5 - Class 1 or 2 |
| | 197 | 2.785 | EK10 | 0.02 | ≤ 1 | CS121) | Cross-section check - Shear force in z-axis acc. to 6.2.6 |
| | 189 | 0.000 | EK10 | 0.00 | ≤ 1 | CS126) | Cross-section check - Shear buckling acc. to 6.2.6(6) |

## 2.2 DESIGN BY CROSS-SECTION

| Sect. No. | Member No. | Location x [m] | LC/CO/ RC | Design | | Equation No. | Description |
|---|---|---|---|---|---|---|---|
| | 189 | 1.393 | EK10 | 0.10 | ≤ 1 | CS141) | Cross-section check - Bending and shear force acc. to 6.2.5 and 6.2.8 |
| | 189 | 0.000 | EK10 | 0.01 | ≤ 1 | CS151) | Cross-section check - Bending about z-axis and shear force acc. to 6.2.5 and 6.2.8 |
| | 189 | 1.671 | EK10 | 0.02 | ≤ 1 | CS161) | Cross-section check - Biaxial bending and shear force acc. to 6.2.6, 6.2.7 and 6.2.9 |
| | 496 | 1.671 | EK10 | 0.10 | ≤ 1 | CS181) | Cross-section check - Bending, shear and axial force acc. to 6.2.9.1 |
| | 496 | 0.000 | EK10 | 0.01 | ≤ 1 | CS201) | Cross-section check - Bending about z-axis, shear and axial force acc. to 6.2.9.1 |
| | 496 | 1.671 | EK10 | 0.02 | ≤ 1 | CS221) | Cross-section check - Biaxial bending, shear and axial force acc. to 6.2.10 and 6.2.9 |
| 18 | **QRO 80x4 \| EN 10219-2:2006** | | | | | | |
| | 498 | 0.270 | EK10 | 0.04 | ≤ 1 | CS101) | Cross-section check - Tension acc. to 6.2.3 |
| | 493 | 0.000 | EK10 | 0.06 | ≤ 1 | CS102) | Cross-section check - Compression acc. to 6.2.4 |
| | 232 | 1.781 | EK10 | 0.15 | ≤ 1 | CS111) | Cross-section check - Bending about y-axis acc. to 6.2.5 - Class 1 or 2 |
| | 72 | 0.000 | EK10 | 0.02 | ≤ 1 | CS121) | Cross-section check - Shear force in z-axis acc. to 6.2.6 |
| | 498 | 0.000 | EK10 | 0.00 | ≤ 1 | CS123) | Cross-section check - Shear force in y-axis acc. to 6.2.6 |
| | 72 | 0.000 | EK10 | 0.00 | ≤ 1 | CS126) | Cross-section check - Shear buckling acc. to 6.2.6(6) |
| | 232 | 1.781 | EK10 | 0.15 | ≤ 1 | CS141) | Cross-section check - Bending and shear force acc. to 6.2.5 and 6.2.8 |
| | 72 | 1.781 | EK10 | 0.15 | ≤ 1 | CS181) | Cross-section check - Bending, shear and axial force acc. to 6.2.9.1 |
| | 505 | 3.039 | EK10 | 0.03 | ≤ 1 | CS201) | Cross-section check - Bending about z-axis, shear and axial force acc. to 6.2.9.1 |
| | 505 | 3.039 | EK10 | 0.00 | ≤ 1 | CS221) | Cross-section check - Biaxial bending, shear and axial force acc. to 6.2.10 and 6.2.9 |
| | 493 | 0.000 | EK10 | 0.05 | ≤ 1 | ST301) | Stability analysis - Flexural buckling about y-axis acc. to 6.3.1.1 and 6.3.1.2(4) |
| | 493 | 0.000 | EK10 | 0.11 | ≤ 1 | ST302) | Stability analysis - Flexural buckling about y-axis acc. to 6.3.1.1 and 6.3.1.2 |
| | 493 | 0.000 | EK10 | 0.05 | ≤ 1 | ST311) | Stability analysis - Flexural buckling about z-axis acc. to 6.3.1.1 and 6.3.1.2(4) |
| | 493 | 0.000 | EK10 | 0.11 | ≤ 1 | ST312) | Stability analysis - Flexural buckling about z-axis acc. to 6.3.1.1 and 6.3.1.2 |
| | 72 | 3.206 | EK10 | 0.23 | ≤ 1 | ST364) | Stability analysis - Bending and compression acc. to 6.3.3, Method 2 |
| 19 | **QRO 80x4 \| EN 10219-2:2006** | | | | | | |
| | 209 | 3.210 | EK10 | 0.01 | ≤ 1 | CS101) | Cross-section check - Tension acc. to 6.2.3 |
| | 528 | 0.000 | EK10 | 0.16 | ≤ 1 | CS102) | Cross-section check - Compression acc. to 6.2.4 |
| | 218 | 0.000 | EK10 | 0.03 | ≤ 1 | CS121) | Cross-section check - Shear force in z-axis acc. to 6.2.6 |
| | 218 | 0.000 | EK10 | 0.02 | ≤ 1 | CS123) | Cross-section check - Shear force in y-axis acc. to 6.2.6 |
| | 209 | 0.000 | EK10 | 0.00 | ≤ 1 | CS126) | Cross-section check - Shear buckling acc. to 6.2.6(6) |
| | 218 | 0.000 | EK10 | 0.34 | ≤ 1 | CS161) | Cross-section check - Biaxial bending and shear force acc. to 6.2.6, 6.2.7 and 6.2.9 |
| | 358 | 0.331 | EK10 | 0.16 | ≤ 1 | CS181) | Cross-section check - Bending, shear and axial force acc. to 6.2.9.1 |
| | 218 | 1.605 | EK10 | 0.08 | ≤ 1 | CS201) | Cross-section check - Bending about z-axis, shear and axial force acc. to 6.2.9.1 |
| | 218 | 3.210 | EK10 | 0.35 | ≤ 1 | CS221) | Cross-section check - Biaxial bending, shear and axial force acc. to 6.2.10 and 6.2.9 |
| | 293 | 0.000 | EK10 | 0.06 | ≤ 1 | ST301) | Stability analysis - Flexural buckling about y-axis acc. to 6.3.1.1 and 6.3.1.2(4) |
| | 528 | 0.000 | EK10 | 0.22 | ≤ 1 | ST302) | Stability analysis - Flexural buckling about y-axis acc. to 6.3.1.1 and 6.3.1.2 |
| | 293 | 0.000 | EK10 | 0.06 | ≤ 1 | ST311) | Stability analysis - Flexural buckling about z-axis acc. to 6.3.1.1 and 6.3.1.2(4) |
| | 528 | 0.000 | EK10 | 0.22 | ≤ 1 | ST312) | Stability analysis - Flexural buckling about z-axis acc. to 6.3.1.1 and 6.3.1.2 |
| | 218 | 0.000 | EK10 | 0.77 | ≤ 1 | ST364) | Stability analysis - Bending and compression acc. to 6.3.3, Method 2 |
| 20 | **IPE 180 \| Euronorm 19-57** | | | | | | |
| | 119 | 0.000 | EK10 | 0.01 | ≤ 1 | CS101) | Cross-section check - Tension acc. to 6.2.3 |
| | 119 | 0.000 | EK10 | 0.01 | ≤ 1 | CS102) | Cross-section check - Compression acc. to 6.2.4 |
| | 108 | 1.910 | EK10 | 0.54 | ≤ 1 | CS111) | Cross-section check - Bending about y-axis acc. to 6.2.5 - Class 1 or 2 |
| | 108 | 0.000 | EK10 | 0.14 | ≤ 1 | CS121) | Cross-section check - Shear force in z-axis acc. to 6.2.6 |
| | 107 | 0.000 | EK10 | 0.00 | ≤ 1 | CS126) | Cross-section check - Shear buckling acc. to 6.2.6(6) |
| | 108 | 1.910 | EK10 | 0.54 | ≤ 1 | CS141) | Cross-section check - Bending and shear force acc. to 6.2.5 and 6.2.8 |
| | 111 | 1.390 | EK10 | 0.29 | ≤ 1 | CS181) | Cross-section check - Bending, shear and axial force acc. to 6.2.9.1 |
| | 108 | 1.910 | EK10 | 1.33 | > 1 | ST331) | Stability analysis - Lateral torsional buckling acc. to 6.3.2.1 and 6.3.2.3 - I-Section |
| 21 | **HE B 260 \| Euronorm 53-62** | | | | | | |
| | 11 | 0.000 | EK10 | 0.00 | ≤ 1 | CS100) | Negligible internal forces |
| | 68 | 0.000 | EK10 | 0.07 | ≤ 1 | CS102) | Cross-section check - Compression acc. to 6.2.4 |
| | 63 | 0.000 | EK10 | 0.03 | ≤ 1 | CS121) | Cross-section check - Shear force in z-axis acc. to 6.2.6 |
| | 347 | 0.000 | EK10 | 0.01 | ≤ 1 | CS123) | Cross-section check - Shear force in y-axis acc. to 6.2.6 |
| | 9 | 0.000 | EK10 | 0.00 | ≤ 1 | CS126) | Cross-section check - Shear buckling acc. to 6.2.6(6) |
| | 68 | 0.000 | EK10 | 0.18 | ≤ 1 | CS181) | Cross-section check - Bending, shear and axial force acc. to 6.2.9.1 |
| | 68 | 0.000 | EK10 | 0.16 | ≤ 1 | CS201) | Cross-section check - Bending about z-axis, shear and axial force acc. to 6.2.9.1 |
| | 63 | 0.000 | EK10 | 0.17 | ≤ 1 | CS221) | Cross-section check - Biaxial bending, shear and axial force acc. to 6.2.10 and 6.2.9 |
| | 63 | 0.000 | EK10 | 0.58 | ≤ 1 | ST364) | Stability analysis - Bending and compression acc. to 6.3.3, Method 2 |

## 2.2 DESIGN BY CROSS-SECTION

| Sect. No. | Member No. | Location x [m] | LC/CO/ RC | Design | | Equation No. | Description |
|---|---|---|---|---|---|---|---|
| 22 | **HE A 200 \| Euronorm 53-62** | | | | | | |
| | 139 | 4.980 | EK10 | 0.01 | ≤ 1 | CS101) | Cross-section check - Tension acc. to 6.2.3 |
| | 125 | 0.000 | EK10 | 0.10 | ≤ 1 | CS102) | Cross-section check - Compression acc. to 6.2.4 |
| | 133 | 0.000 | EK10 | 0.05 | ≤ 1 | CS121) | Cross-section check - Shear force in z-axis acc. to 6.2.6 |
| | 527 | 0.000 | EK10 | 0.03 | ≤ 1 | CS123) | Cross-section check - Shear force in y-axis acc. to 6.2.6 |
| | 122 | 0.000 | EK10 | 0.00 | ≤ 1 | CS126) | Cross-section check - Shear buckling acc. to 6.2.6(6) |
| | 122 | 4.980 | EK10 | 0.25 | ≤ 1 | CS181) | Cross-section check - Bending, shear and axial force acc. to 6.2.9.1 |
| | 176 | 1.269 | EK10 | 0.17 | ≤ 1 | CS201) | Cross-section check - Bending about z-axis, shear and axial force acc. to 6.2.9.1 |
| | 173 | 0.000 | EK10 | 0.40 | ≤ 1 | CS221) | Cross-section check - Biaxial bending, shear and axial force acc. to 6.2.10 and 6.2.9 |
| | 180 | 3.808 | EK10 | 0.02 | ≤ 1 | ST301) | Stability analysis - Flexural buckling about y-axis acc. to 6.3.1.1 and 6.3.1.2(4) |
| | 180 | 3.808 | EK10 | 0.03 | ≤ 1 | ST311) | Stability analysis - Flexural buckling about z-axis acc. to 6.3.1.1 and 6.3.1.2(4) |
| | 180 | 3.808 | EK10 | 0.02 | ≤ 1 | ST321) | Stability analysis - Torsional buckling acc. to 6.3.1.4 and 6.3.1.2(4) |
| | 122 | 0.000 | EK10 | 0.45 | ≤ 1 | ST363) | Stability analysis - Biaxial bending acc. to 6.3.3, Method 2 |
| | 131 | 0.000 | EK10 | 0.84 | ≤ 1 | ST364) | Stability analysis - Bending and compression acc. to 6.3.3, Method 2 |
| 23 | **HE A 200 \| Euronorm 53-62** | | | | | | |
| | 54 | 8.900 | EK10 | 0.04 | ≤ 1 | CS101) | Cross-section check - Tension acc. to 6.2.3 |
| | 54 | 3.337 | EK10 | 0.00 | ≤ 1 | CS121) | Cross-section check - Shear force in z-axis acc. to 6.2.6 |
| | 54 | 0.000 | EK10 | 0.00 | ≤ 1 | CS126) | Cross-section check - Shear buckling acc. to 6.2.6(6) |
| | 60 | 8.900 | EK10 | 0.05 | ≤ 1 | CS181) | Cross-section check - Bending, shear and axial force acc. to 6.2.9.1 |
| | 60 | 8.900 | EK10 | 0.03 | ≤ 1 | CS201) | Cross-section check - Bending about z-axis, shear and axial force acc. to 6.2.9.1 |
| | 56 | 8.900 | EK10 | 0.04 | ≤ 1 | CS221) | Cross-section check - Biaxial bending, shear and axial force acc. to 6.2.10 and 6.2.9 |
| | 56 | 1.112 | EK10 | 0.14 | ≤ 1 | ST363) | Stability analysis - Biaxial bending acc. to 6.3.3, Method 2 |
| 24 | **RO 101.6x3 \| EN 10219-2:2006** | | | | | | |
| | 513 | 0.000 | EK10 | 0.00 | ≤ 1 | CS100) | Negligible internal forces |
| | 511 | 5.559 | EK10 | 0.08 | ≤ 1 | CS101) | Cross-section check - Tension acc. to 6.2.3 |
| | 512 | 0.000 | EK10 | 0.08 | ≤ 1 | CS102) | Cross-section check - Compression acc. to 6.2.4 |
| | 515 | 3.372 | EK10 | 0.04 | ≤ 1 | CS111) | Cross-section check - Bending about y-axis acc. to 6.2.5 - Class 1 or 2 |
| | 515 | 0.000 | EK10 | 0.00 | ≤ 1 | CS121) | Cross-section check - Shear force in z-axis acc. to 6.2.6 |
| | 515 | 3.372 | EK10 | 0.04 | ≤ 1 | CS141) | Cross-section check - Bending and shear force acc. to 6.2.5 and 6.2.8 |
| | 512 | 2.780 | EK10 | 0.04 | ≤ 1 | CS181) | Cross-section check - Bending, shear and axial force acc. to 6.2.9.1 |
| | 512 | 0.000 | EK10 | 0.45 | ≤ 1 | ST302) | Stability analysis - Flexural buckling about y-axis acc. to 6.3.1.1 and 6.3.1.2 |
| | 512 | 0.000 | EK10 | 0.45 | ≤ 1 | ST312) | Stability analysis - Flexural buckling about z-axis acc. to 6.3.1.1 and 6.3.1.2 |
| | 512 | 1.112 | EK10 | 0.49 | ≤ 1 | ST364) | Stability analysis - Bending and compression acc. to 6.3.3, Method 2 |
| 25 | **RO 76.1x3 \| EN 10219-2:2006** | | | | | | |
| | 484 | 0.000 | EK10 | 0.00 | ≤ 1 | CS100) | Negligible internal forces |
| | 483 | 0.000 | EK10 | 0.10 | ≤ 1 | CS101) | Cross-section check - Tension acc. to 6.2.3 |
| | 484 | 0.000 | EK10 | 0.10 | ≤ 1 | CS102) | Cross-section check - Compression acc. to 6.2.4 |
| | 517 | 2.261 | EK10 | 0.04 | ≤ 1 | CS111) | Cross-section check - Bending about y-axis acc. to 6.2.5 - Class 1 or 2 |
| | 522 | 0.000 | EK10 | 0.00 | ≤ 1 | CS121) | Cross-section check - Shear force in z-axis acc. to 6.2.6 |
| | 517 | 2.261 | EK10 | 0.04 | ≤ 1 | CS141) | Cross-section check - Bending and shear force acc. to 6.2.5 and 6.2.8 |
| | 520 | 2.261 | EK10 | 0.06 | ≤ 1 | CS181) | Cross-section check - Bending, shear and axial force acc. to 6.2.9.1 |
| | 490 | 3.923 | EK10 | 0.05 | ≤ 1 | ST301) | Stability analysis - Flexural buckling about y-axis acc. to 6.3.1.1 and 6.3.1.2(4) |
| | 520 | 4.522 | EK10 | 0.43 | ≤ 1 | ST302) | Stability analysis - Flexural buckling about y-axis acc. to 6.3.1.1 and 6.3.1.2 |
| | 490 | 3.923 | EK10 | 0.05 | ≤ 1 | ST311) | Stability analysis - Flexural buckling about z-axis acc. to 6.3.1.1 and 6.3.1.2(4) |
| | 520 | 4.522 | EK10 | 0.43 | ≤ 1 | ST312) | Stability analysis - Flexural buckling about z-axis acc. to 6.3.1.1 and 6.3.1.2 |
| | 520 | 4.070 | EK10 | 0.48 | ≤ 1 | ST364) | Stability analysis - Bending and compression acc. to 6.3.3, Method 2 |
| 26 | **QRO 120x5 \| EN 10219-2:2006** | | | | | | |
| | 233 | 3.140 | EK10 | 0.01 | ≤ 1 | CS101) | Cross-section check - Tension acc. to 6.2.3 |
| | 233 | 0.000 | EK10 | 0.01 | ≤ 1 | CS102) | Cross-section check - Compression acc. to 6.2.4 |
| | 282 | 0.000 | EK10 | 0.08 | ≤ 1 | CS121) | Cross-section check - Shear force in z-axis acc. to 6.2.6 |
| | 282 | 0.000 | EK10 | 0.02 | ≤ 1 | CS123) | Cross-section check - Shear force in y-axis acc. to 6.2.6 |
| | 233 | 0.000 | EK10 | 0.00 | ≤ 1 | CS126) | Cross-section check - Shear buckling acc. to 6.2.6(6) |
| | 282 | 0.000 | EK10 | 0.09 | ≤ 1 | CS161) | Cross-section check - Biaxial bending and shear force acc. to 6.2.6, 6.2.7 and 6.2.9 |
| | 233 | 3.140 | EK10 | 0.18 | ≤ 1 | CS221) | Cross-section check - Biaxial bending, shear and axial force acc. to 6.2.10 and 6.2.9 |
| | 233 | 0.000 | EK10 | 0.02 | ≤ 1 | ST301) | Stability analysis - Flexural buckling about y-axis acc. to 6.3.1.1 and 6.3.1.2(4) |
| | 233 | 0.000 | EK10 | 0.02 | ≤ 1 | ST311) | Stability analysis - Flexural buckling about z-axis acc. to 6.3.1.1 and 6.3.1.2(4) |
| | 233 | 1.570 | EK10 | 0.43 | ≤ 1 | ST364) | Stability analysis - Bending and compression acc. to 6.3.3, Method 2 |
| 27 | **IF HE A 240-20 \| ArcelorMittal (EN 10365:2017)** | | | | | | |

## 2.2 DESIGN BY CROSS-SECTION

| Sect. No. | Member No. | Location x [m] | LC/CO/ RC | Design | | Equation No. | Description |
|---|---|---|---|---|---|---|---|
| | 342 | 0.615 | EK10 | 0.01 | ≤ 1 | CS101) | Cross-section check - Tension acc. to 6.2.3 |
| | 342 | 0.000 | EK10 | 0.00 | ≤ 1 | CS122) | Cross-section check - Shear force in z-axis acc. to 6.2.6(4) - Class 3 or 4 |
| | 342 | 0.000 | EK10 | 0.09 | ≤ 1 | CS124) | Cross-section check - Shear force in y-axis acc. to 6.2.6(4) - Class 3 or 4 |
| | 342 | 0.000 | EK10 | 0.14 | ≤ 1 | CS223) | Cross-section check - Biaxial bending, shear and axial force acc. to 6.2.10 and 6.2.9 - Class 3 - General cross-section |

# GLAVNI STREŠNI NOSILC DIMENZIONIRANJE NA POTRESNO KOMBINACIJO

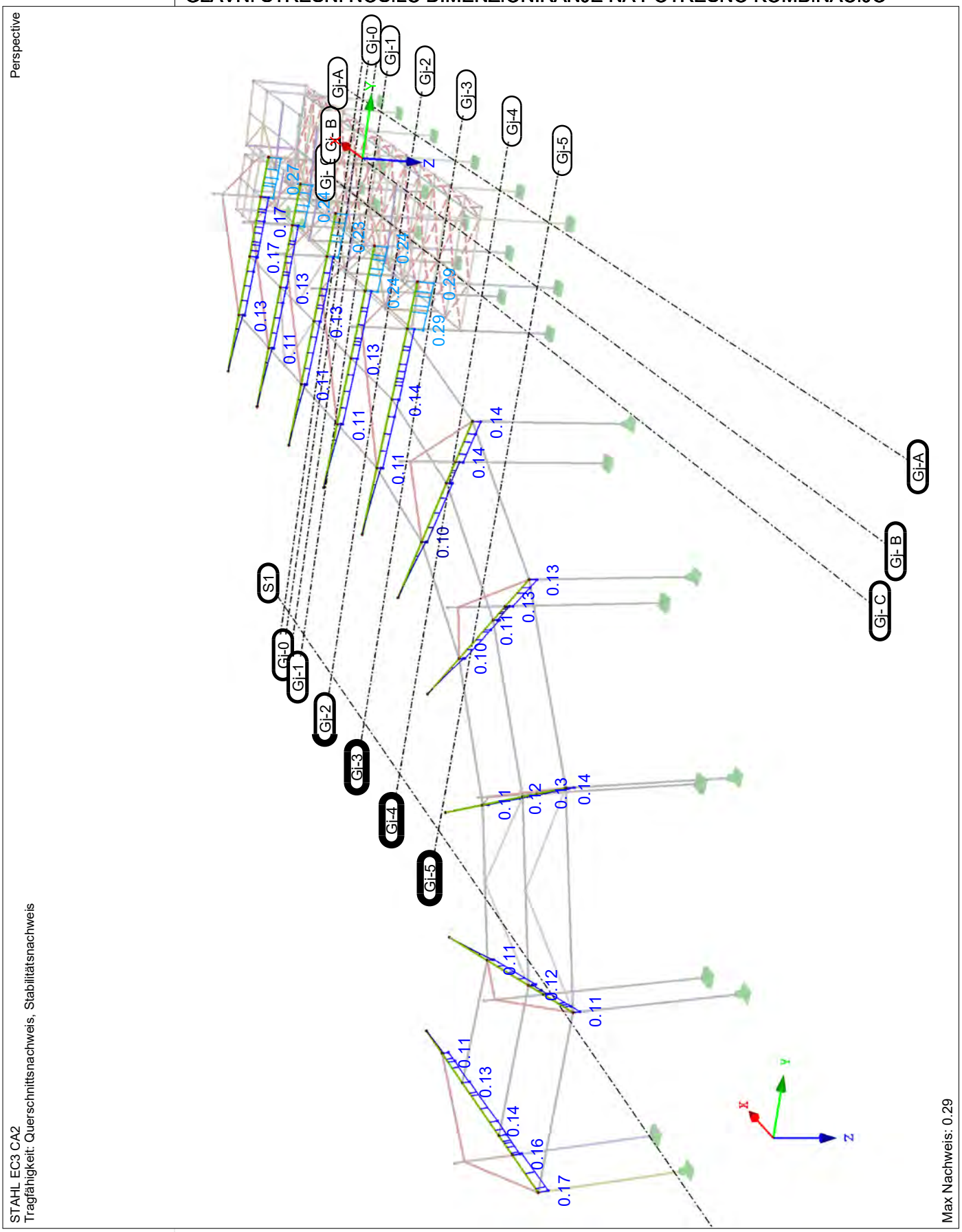

# GLAVNI STEBRI KONSTRUKCIJE - DIMENZIONIRANJE NA POTRESNO KOMBINACIJO

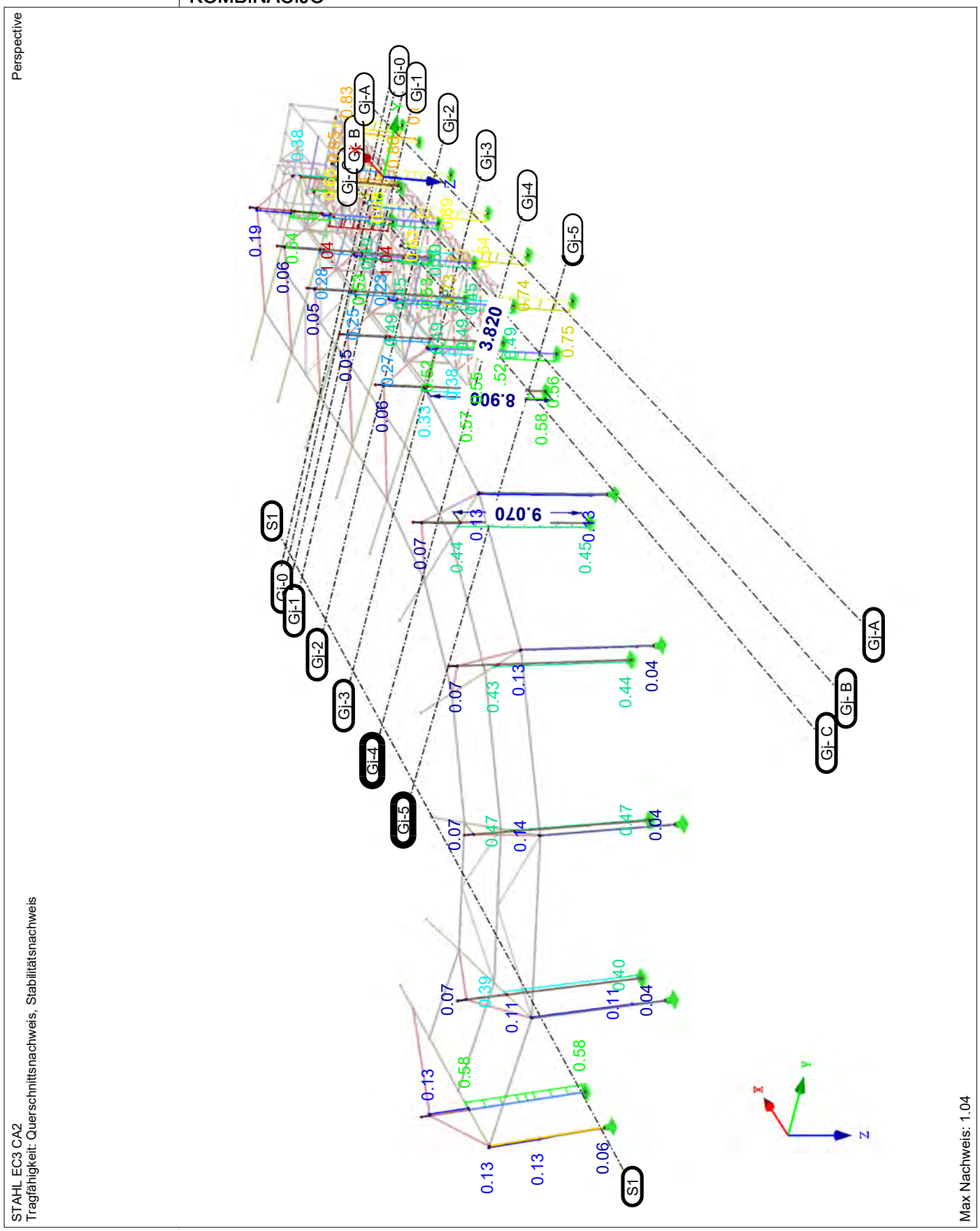

# STREŠNI IN ETAŽNI NOSILCI OBJEKTA - DIMENZIONIRANJE NA POTRESNO KOMBINACIJO

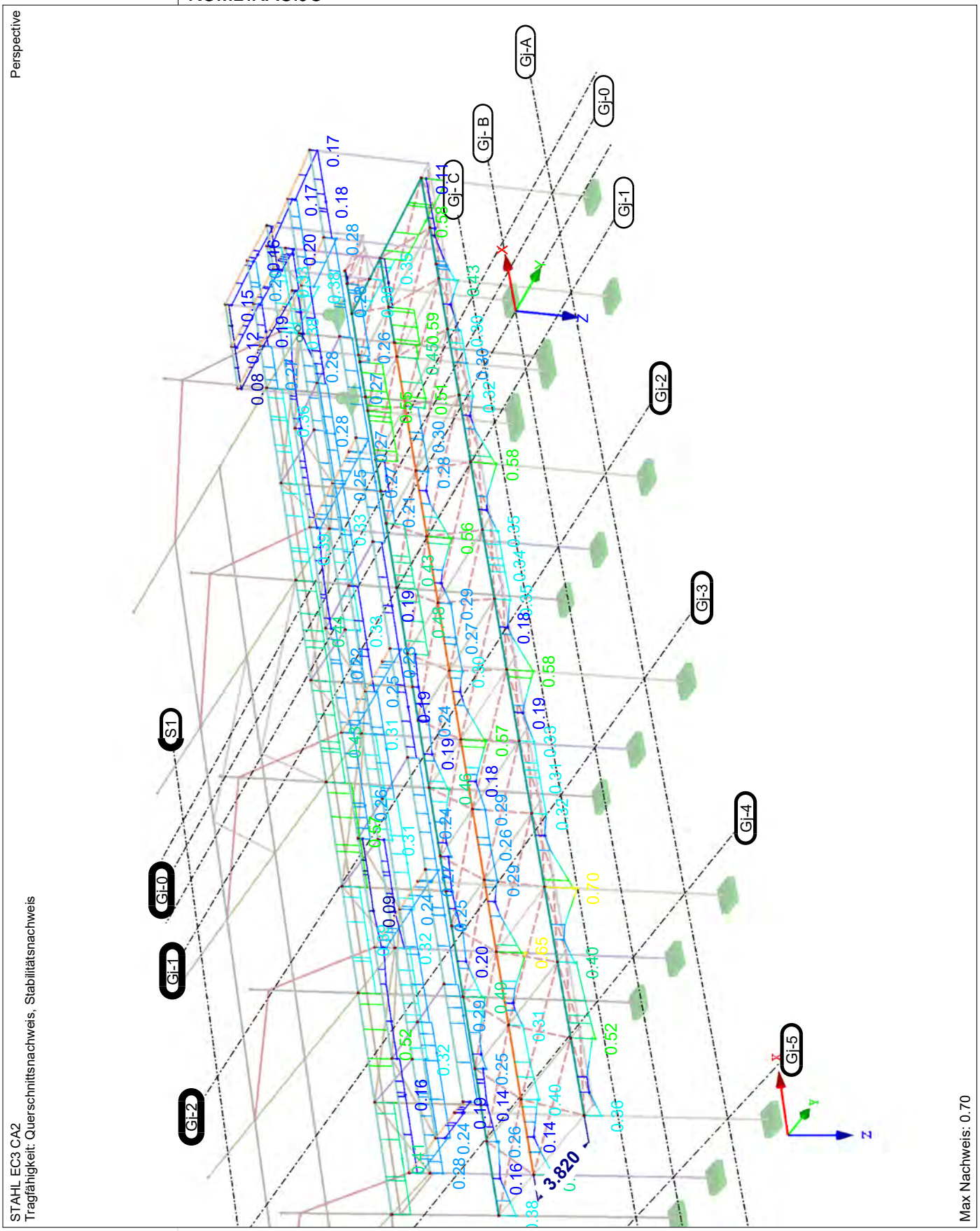

# GLAVNE NOSILNE NATEZNO TLACNE DIAGONALE NADSTREŠNICE - DIMENZIONIRANJE NA POT. KOMB.

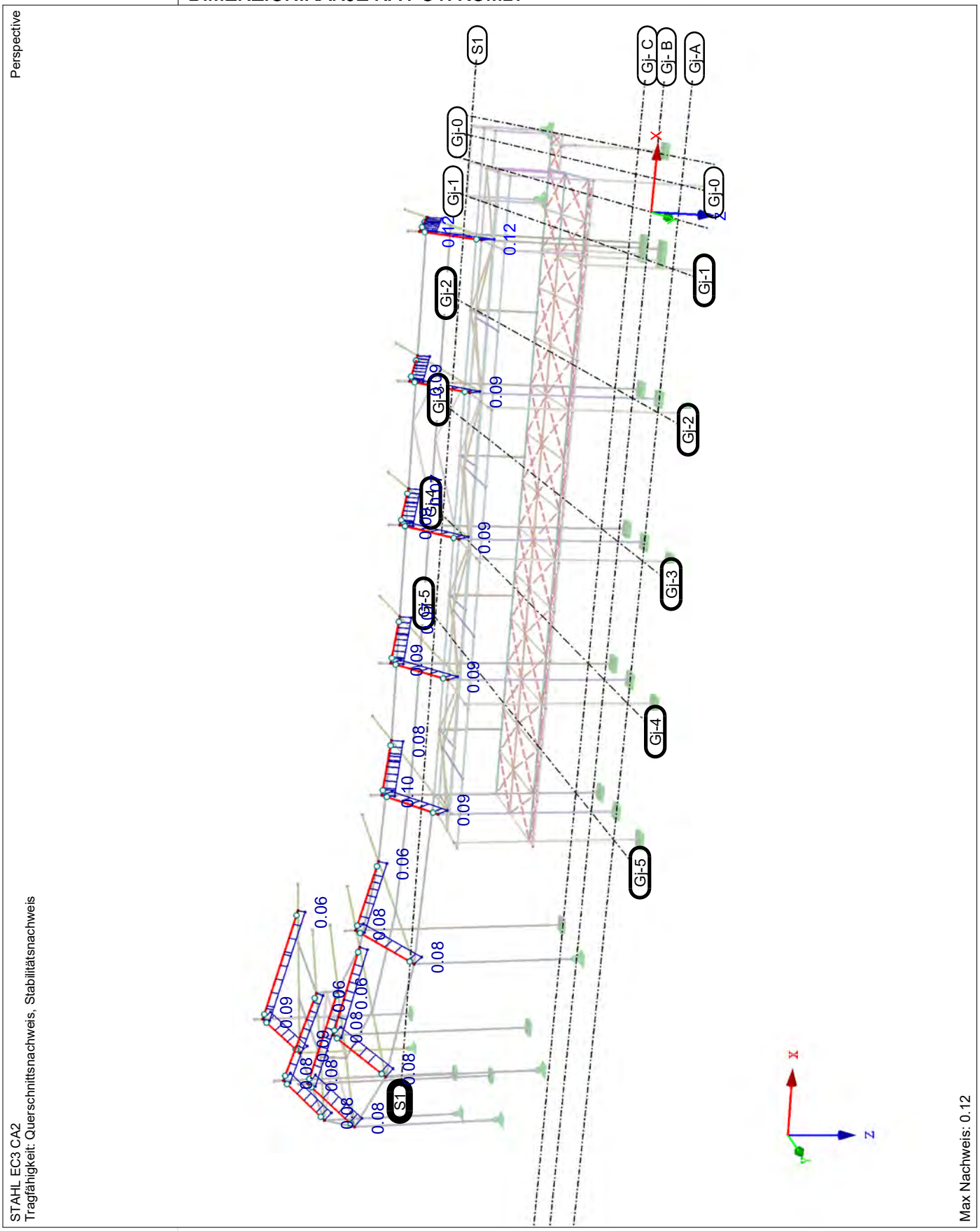

# STREŠNE VEZI IN TLACNE POVEZAVE - DIMENZIONIRANJE NA POTRESNO KOMBINACIJO

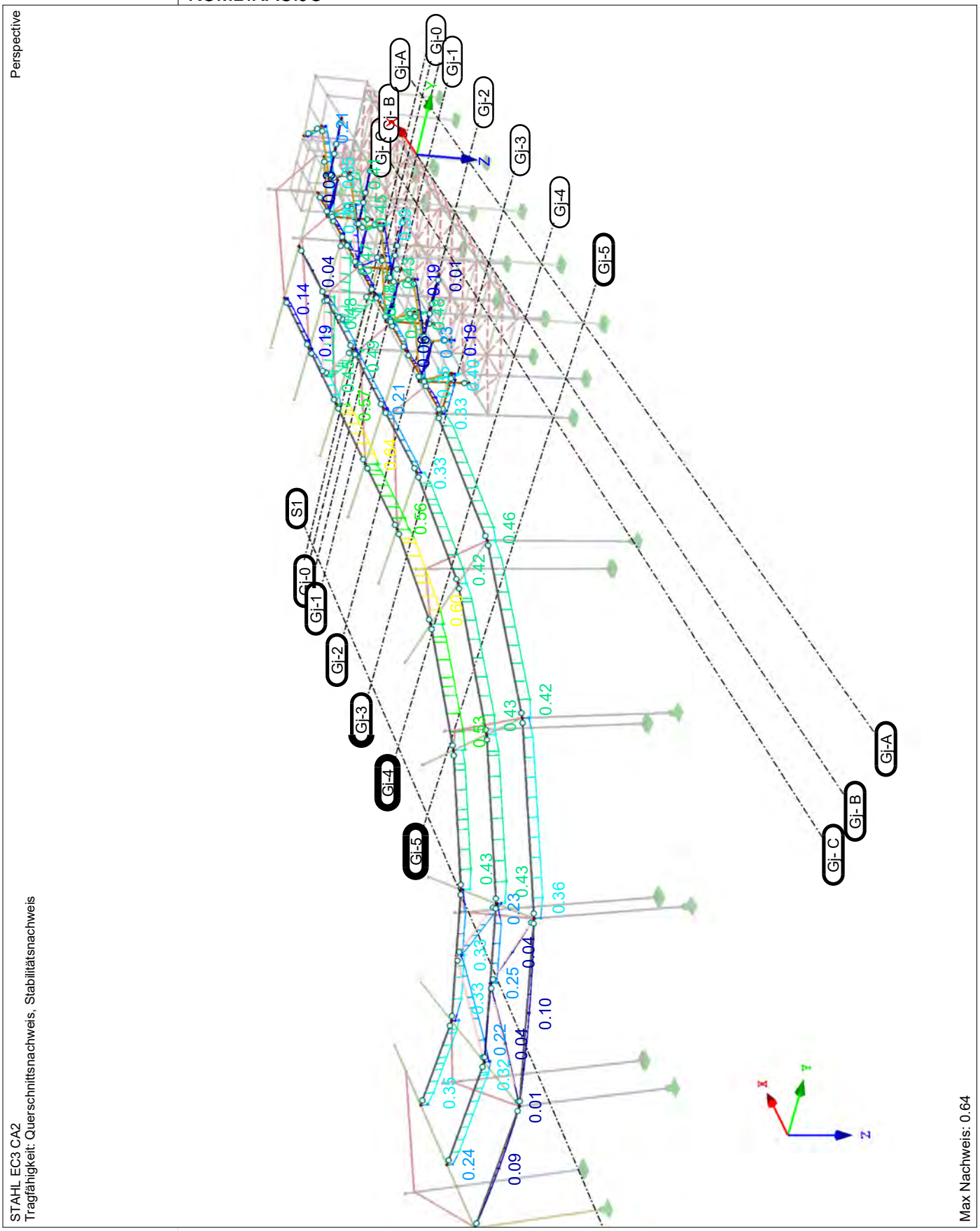

# SEKUNDARNI IN FASADNI STEBRI- DIMENZIONIRANJE NA POTRESNO KOMBINACIJO

STAHL EC3 CA2
Tragfähigkeit: Querschnittsnachweis, Stabilitätsnachweis

Perspective

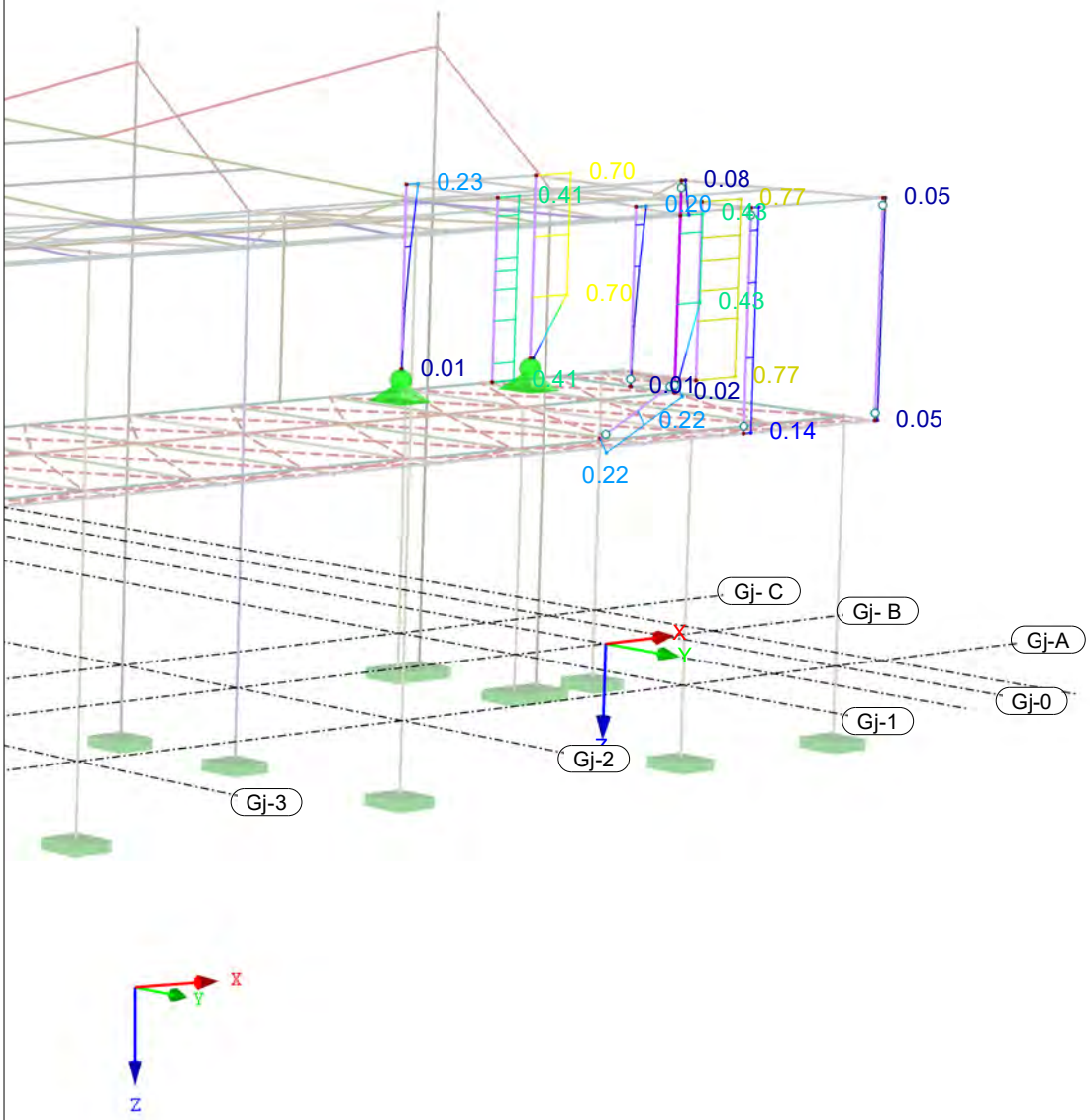


Max Nachweis: 0.77

**DYNAM**
FA1
Dynamische Analyse

## 1.1 GENERAL DATA

| | | |
|---|---|---|
| Selected method: | ☒ Natural Vibrations | |
| | ☐ Forced Vibrations | |
| | ☒ Equivalent Lateral Forces Analysis | |
| Number of lowest eigenvalues: | 10 | |
| Consider self-weight | ☒ | |
| - with factor: | 1.00 | |
| Stiffness modifications from RSTAB | ☐ | |
| Effect of masses in: | ☒ X-direction | ☐ X-rotational |
| | ☒ Y-direction | ☐ Y-rotational |
| | ☒ Z-direction | ☐ Z-rotational |
| Internal Partition for | | |
| - Approximation method: | 1 | |
| - Tapering/EI foundations: | 1 | |
| Type of mass matrix: | ☒ Diagonal | |
| | ☐ Consistent | |
| | ☐ Unit matrix | |
| Standardized normal modes: | Such that \|u\| = 1 | |
| Considering geometrical stiffness matrix | ☐ | |
| Details | | |
| - Gravity acceleration: | 10.00 [m/s²] | |
| - Max number of iterations: | 100 | |
| - Break off limit: | 0.00001 | |
| - Minimum tension force in cable members: | 0.001 [kN] | |

## 1.2.2 ADDITIONAL MEMBER MASSES

| No. | List of Members with Mass | Mass m [kg/m] | |
|---|---|---|---|
| 1 | 7 | 285.72 | |
| 2 | 8 | 277.32 | |
| 3 | 16,18,238 | 178.24 | |
| 4 | 22,24,25,256,257,266,267,272,273 | 178.12 | |
| 5 | 27,291,292 | 231.56 | |
| 6 | 28 | 175.56 | |
| 7 | 29 | 204.71 | |
| 8 | 35,36,41,42,47,48,141,144,147,150,155,214,315,316,336 | 79.00 | |
| 9 | 37,38,43,44,49,50,52,72,73,76-78,97,104,109,113,117,134,142,145, 148,151,158,177,199,204,210-212,216,221-229,232,319,320,338,359, 362,493,494 | 65.00 | |
| 10 | 51,88,99,101-103,138,159,160 | 180.38 | |
| 11 | 80,91,106,121,191,205,217,500 | 143.44 | |
| 12 | 82,105,161,162,169-172,339 | 115.36 | |
| 13 | 83,163-165,174,184-187 | 230.74 | |
| 14 | 90,110,194,208,220,350,495,499 | 160.58 | |
| 15 | 107,124 | 713.37 | |
| 16 | 108,111,114,115,118,119,126,128,130,317,318,321-327,330,332,333, 363-366,368,369 | 1296.75 | |
| 17 | 135-137 | 1016.24 | |
| 18 | 153,154,202 | 511.19 | |
| 19 | 156 | 215.04 | |
| 20 | 157 | 410.74 | |
| 21 | 175 | 235.02 | |
| 22 | 189,192,262,268,274,496 | 67.13 | |
| 23 | 195 | 265.98 | |
| 24 | 196 | 252.64 | |
| 25 | 197 | 67.13 | |
| 26 | 219,285 | 41.46 | |
| 27 | 234,236,244 | 232.99 | |
| 28 | 235,237,245 | 249.37 | |
| 29 | 248 | 229.39 | |
| 30 | 249 | 245.50 | |
| 31 | 252 | 243.77 | |
| 32 | 254 | 210.90 | |
| 33 | 255 | 178.18 | |
| 34 | 258 | 33.57 | |
| 35 | 278 | 194.52 | |
| 36 | 279 | 64.54 | |
| 37 | 305,307,308 | 210.91 | |
| 38 | 309 | 207.68 | |
| 39 | 328,329,367 | 1296.75 | |
| 40 | 331,334,370 | 1153.43 | |
| 41 | 337,371,372 | 1022.39 | |
| 42 | 348 | 114.58 | |
| 43 | 353 | 116.80 | |
| 44 | 357 | 90.13 | |
| 45 | 361 | 139.23 | |
| 46 | 373 | 782.67 | |
| 47 | 460 | 792.37 | |
| 48 | 523 | 159.83 | |
| 49 | 524 | 71.39 | |
| 50 | 525 | 114.58 | |
| 51 | 107,124,460 | 106.87 | |
| 52 | 108,111,114,115,118,119,126,128,130,317,318,321-330,332,333, 363-369 | 213.75 | |
| 53 | 135-137 | 167.51 | |

## 1.2.2 ADDITIONAL MEMBER MASSES

| No. | List of Members with Mass | Mass m [kg/m] | |
|---|---|---|---|
| 54 | 153,154,202 | 84.26 | |
| 55 | 156 | 22.42 | |
| 56 | 157 | 67.70 | |
| 57 | 331,334,370 | 190.13 | |
| 58 | 337,371,372 | 168.53 | |
| 59 | 361 | 22.95 | |
| 60 | 373 | 129.01 | |

## 1.7 EQUIVALENT LATERAL FORCES

Export to RSTAB ☐

## STANDARD PARAMETERS - EN 1998-1:2010 SIST - SLOWENIEN (DESIGN SPECTRUM)

| | | | | | | |
|---|---|---|---|---|---|---|
| | National Annex: | SIST | Slovenia | | | |
| | Spectrum type: | 1 | | | | |
| | Seismic action | Reference peak ground acceleration | $a_{gR}$ | : | 1.000 | m/s² |
| | | Importance category | | : | II | |
| | | Importance factor | $\gamma_I$ | : | 1.0000 | |
| | | Design ground acceleration | $a_g$ | : | 1.0000 | m/s² |
| | | Design ground acceleration (vertical) | $a_{gv}$ | : | 0.9000 | m/s² |
| | Parameter for description of response spectrum | Ground type | | : | C | |
| | | Soil factor | S | : | 1.1500 | |
| | | Lower limit of area of constant spectral acceleration (horizontal) | $T_{B-H}$ | : | 0.2000 | s |
| | | Upper limit of area of constant spectral acceleration (horizontal) | $T_{C-H}$ | : | 0.6000 | s |
| | | Value defining the beginning of area of constant spectrum displacements (horizontal) | $T_{D-H}$ | : | 2.0000 | s |
| | | Lower limit of area of constant spectral acceleration (vertical) | $T_{B-V}$ | : | 0.0500 | s |
| | | Upper limit of area of constant spectral acceleration (vertical) | $T_{C-V}$ | : | 0.1500 | s |
| | | Value defining the beginning of area of constant spectrum displacements (vertical) | $T_{D-V}$ | : | 1.0000 | s |
| | Factors | Behavior factor | q | : | 1.5000 | |
| | | Limit value for horizontal design spectrum | β | : | 0.2 | |

## RESPONSE SPECTRUM IN DIRECTION X

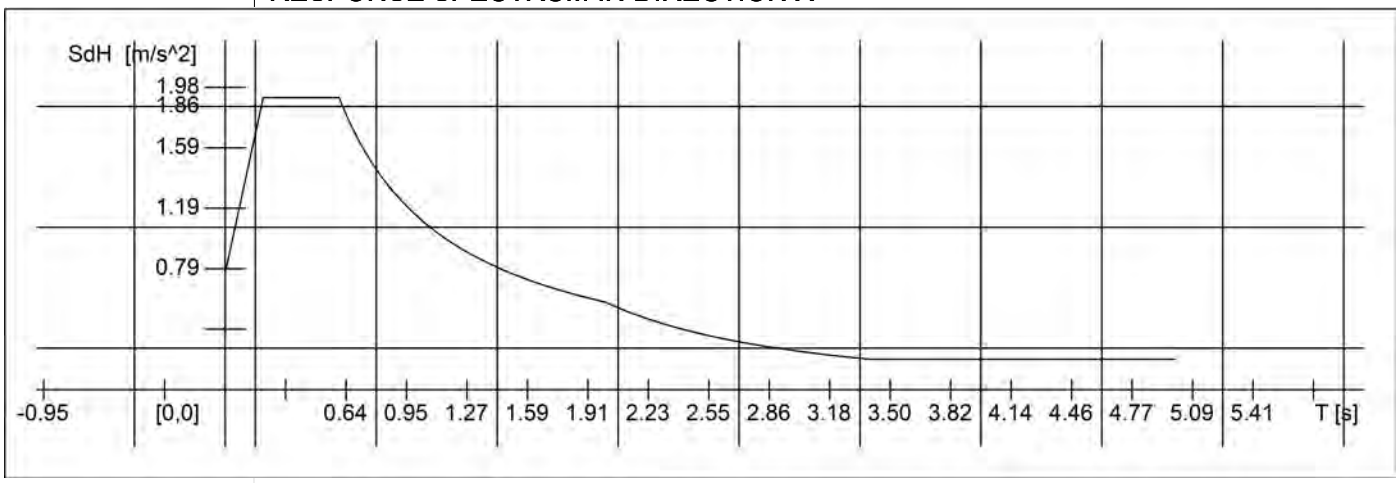

## RESPONSE SPECTRUM IN DIRECTION Y

## RESPONSE SPECTRUM IN DIRECTION Z

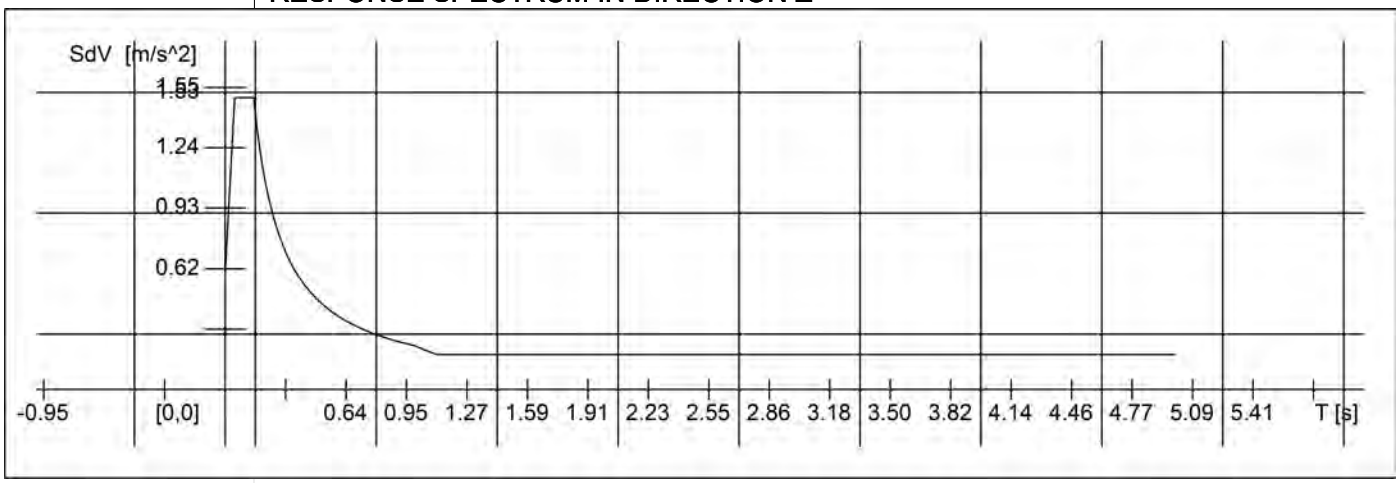


## FACTORS FOR SPECTRUM

| | Factor in X-direction | Factor in Y-direction | Factor in Z-direction | |
|---|---|---|---|---|
| | 1.000 | 1.000 | 1.000 | |

## ALLOCATION OF DESIGN SPECTRUM

| No. | Generated eigenvalue No. | In RSTAB LC No. | Ordinate of design spectrum SdH [m/s^2] | SdV [m/s^2] | |
|---|---|---|---|---|---|
| 1 | 1 - ??? Hz | 9 | | | |
| 2 | 2 - ??? Hz | 10 | | | |
| 3 | 3 - ??? Hz | 11 | | | |
| 4 | 4 - ??? Hz | 12 | | | |
| 5 | 5 - ??? Hz | 13 | | | |
| 6 | 6 - ??? Hz | 14 | | | |
| 7 | 7 - ??? Hz | 15 | | | |
| 8 | 8 - ??? Hz | 16 | | | |
| 9 | 9 - ??? Hz | 17 | | | |
| 10 | 10 - ??? Hz | 18 | | | |

**RSKNICK**
CA1
Stabilitätsanalyse

## 1.1 GENERAL DATA

| | |
|---|---|
| Number of buckling modes: | 10 |
| Axial forces have been imported from RSTAB EK11 | |
| Internal member partition for | |
| - Beams: | 2 |
| - Trusses: | 1 |
| - Tapering or elastic foundation: | 6 |
| Consider the effect of tensile forces | ☒ |
| Stiffness modification $\gamma_M$ | ☐ |
| Maximum number of iterations: | 100 |
| Iteration break off limit: | 1.000E-05 |

## 2.3 CRITICAL LOAD FACTORS

| Shape No. | Critical Load Factor | Magnifying Factor Alpha | |
|---|---|---|---|
| 1 | 1.343 | 3.917 | |
| 2 | 1.644 | 2.552 | |
| 3 | 1.644 | 2.552 | |
| 4 | 1.650 | 2.539 | |
| 5 | 1.650 | 2.539 | |
| 6 | 1.651 | 2.536 | |
| 7 | 1.651 | 2.536 | |
| 8 | 1.701 | 2.427 | |
| 9 | 1.725 | 2.379 | |
| 10 | 1.725 | 2.379 | |

# STRUCTURAL ANALYSIS

**PROJECT**

## SEVEROZAHODNA TRIBUNA S POMOŽNIMI PROSTORI NA OBMOCJU STADIAONA FAZANARIJA

**CLIENT**

## MESTNA OBCINA MURSKA SOBOTA
## Kardoševa 2,
## 9000 MURSKA SOBOTA

**CREATED BY**

**RAZPON d.o.o.**
**Tehnološki park 20, 1000 Ljubljana**
**mag. Igor Gorup dipl.ing. str. G- 2458**

Isometric

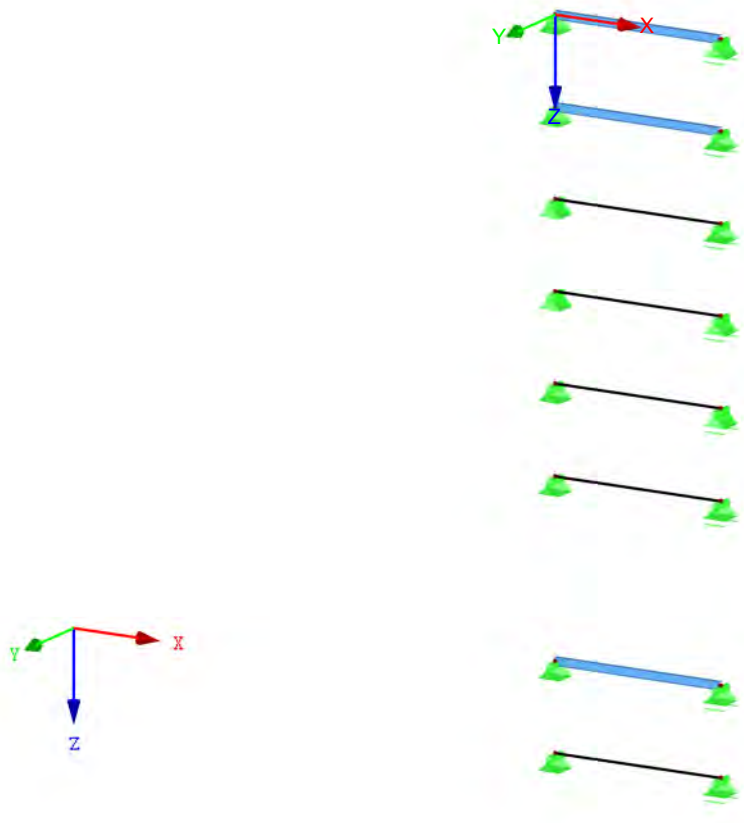

# MODEL - GENERAL DATA

| | | | | |
|---|---|---|---|---|
| General | Model name | : | Sovprezni nosilec 1 |
| | Project name | : | Kalamar_Fazanarija |
| | Type of model | : | 2D-XZ (ux/uz/φy) |
| | Positive direction of global axis Z | : | Downward |
| | Classification of load cases and combinations | : | According to Standard: ASCE 7-16<br>National Annex: None |
| Options | ☐ Use CQC Rule | | |
| | ☐ Enable CAD/BIM model | | |
| | Standard Gravity | | |
| | g | : | 10.00 m/s² |

## 1.1 NODES

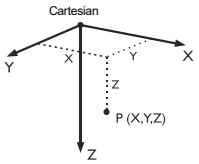


| Node No. | Reference Node | Coordinate System | Node Coordinates X [m] | Z [m] | Comment |
|---|---|---|---|---|---|
| 1 | - | Cartesian | 0.000 | 0.000 | Supported |
| 2 | - | Cartesian | 3.820 | 0.000 | Supported |
| 101 | - | Cartesian | 0.000 | 1.910 | Supported |
| 102 | - | Cartesian | 3.820 | 1.910 | Supported |
| 201 | - | Cartesian | 0.000 | 3.820 | Supported |
| 202 | - | Cartesian | 3.820 | 3.820 | Supported |
| 301 | - | Cartesian | 0.000 | 5.730 | Supported |
| 302 | - | Cartesian | 3.820 | 5.730 | Supported |
| 401 | - | Cartesian | 0.000 | 7.640 | Supported |
| 402 | - | Cartesian | 3.820 | 7.640 | Supported |
| 501 | - | Cartesian | 0.000 | 9.550 | Supported |
| 502 | - | Cartesian | 3.820 | 9.550 | Supported |
| 601 | - | Cartesian | 0.000 | 13.370 | Supported |
| 602 | - | Cartesian | 3.820 | 13.370 | Supported |
| 701 | - | Cartesian | 0.000 | 15.280 | Supported |
| 702 | - | Cartesian | 3.820 | 15.280 | Supported |

## 1.2 MATERIALS

| Matl. No. | Modulus E [kN/cm²] | Modulus G [kN/cm²] | Spec. Weight γ [kN/m³] | Coeff. of Th. Exp. α [1/°C] | Partial Factor γM [-] | Material Model |
|---|---|---|---|---|---|---|
| 1 | S 355 | | | | | |
| | 21000.00 | 8100.00 | 78.50 | 1.20E-05 | 1.10 | Isotropic Linear Elastic |
| 2 | S 355 | | | | | |
| | 21000.00 | 8100.00 | 78.50 | 1.20E-05 | 1.10 | Isotropic Linear Elastic |
| 3 | S 355 | | | | | |
| | 21000.00 | 8100.00 | 78.50 | 1.20E-05 | 1.10 | Isotropic Linear Elastic |
| 4 | S 355 | | | | | |
| | 21000.00 | 8100.00 | 78.50 | 1.20E-05 | 1.10 | Isotropic Linear Elastic |
| 5 | S 355 | | | | | |
| | 21000.00 | 8100.00 | 78.50 | 1.20E-05 | 1.10 | Isotropic Linear Elastic |
| 6 | S 355 | | | | | |
| | 21000.00 | 8100.00 | 78.50 | 1.20E-05 | 1.10 | Isotropic Linear Elastic |
| 7 | S 355 | | | | | |
| | 21000.00 | 8100.00 | 78.50 | 1.20E-05 | 1.10 | Isotropic Linear Elastic |
| 8 | S 355 | | | | | |
| | 21000.00 | 8100.00 | 78.50 | 1.20E-05 | 1.10 | Isotropic Linear Elastic |

## 1.3 CROSS-SECTIONS

| Section No. | Matl. No. | J [cm⁴] / A [cm²] | $I_y$ [cm⁴] / $A_y$ [cm²] | $I_z$ [cm⁴] / $A_z$ [cm²] | Principal Axes α [°] | Rotation α' [°] | Overall Dimensions [mm] Width b | Height h |
|---|---|---|---|---|---|---|---|---|
| 1 | IPE 180 \| Euronorm 19-57 | | | | | | | |
| | 1 | 23.90 | 1320.00 | 8.76 | 0.00 | 0.00 | 91.0 | 180.0 |
| 2 | Cross-section 2 | | | | | | | |
| | 1 | 121.80 | 8034.67 | 0.00 | 0.00 | 0.00 | 0.0 | 0.0 |
| 3 | IPE 180 \| Euronorm 19-57 | | | | | | | |
| | 1 | 23.90 | 1320.00 | 8.76 | 0.00 | 0.00 | 91.0 | 180.0 |
| 4 | Cross-section 4 | | | | | | | |
| | 1 | 50.24 | 5497.40 | 0.00 | 0.00 | 0.00 | 0.0 | 0.0 |
| 5 | Cross-section 5 | | | | | | | |
| | 1 | 54.83 | 5827.66 | 0.00 | 0.00 | 0.00 | 0.0 | 0.0 |
| 6 | Cross-section 6 | | | | | | | |
| | 1 | 110.21 | 7598.16 | 0.00 | 0.00 | 0.00 | 0.0 | 0.0 |
| 7 | Cross-section 7 | | | | | | | |
| | 1 | 208.95 | 8362.56 | 0.00 | 0.00 | 0.00 | 0.0 | 0.0 |
| 8 | IPE 180 \| Euronorm 19-57 | | | | | | | |

## 1.3 CROSS-SECTIONS

| Section No. | Matl. No. | J [cm⁴] / A [cm²] | $I_y$ [cm⁴] / $A_y$ [cm²] | $I_z$ [cm⁴] / $A_z$ [cm²] | Principal Axes α [°] | Rotation α' [°] | Overall Dimensions [mm] Width b | Height h |
|---|---|---|---|---|---|---|---|---|
| | 1 | 23.90 | 1320.00 | 8.76 | 0.00 | 0.00 | 91.0 | 180.0 |
| 9 | Cross-section 9 | | | | | | | |
| | 1 | 121.80 | 8034.67 | 0.00 | 0.00 | 0.00 | 0.0 | 0.0 |

## 1.7 MEMBERS

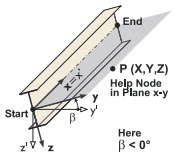


| Mbr. No. | Member | Node Start | Node End | Rotation Type | Rotation β [°] | Cross-Section Start | Cross-Section End | Hinge No. Start | Hinge No. End | Ecc. No. | Div. No. | Length L [m] | |
|---|---|---|---|---|---|---|---|---|---|---|---|---|---|
| 1 | Beam | 1 | 2 | Angle | 0.00 | 1 | 1 | - | - | - | - | 3.820 | X |
| 101 | Beam | 101 | 102 | Angle | 0.00 | 3 | 3 | - | - | - | - | 3.820 | X |
| 201 | Beam | 201 | 202 | Angle | 0.00 | 4 | 4 | - | - | - | - | 3.820 | X |
| 301 | Beam | 301 | 302 | Angle | 0.00 | 5 | 5 | - | - | - | - | 3.820 | X |
| 401 | Beam | 401 | 402 | Angle | 0.00 | 6 | 6 | - | - | - | - | 3.820 | X |
| 501 | Beam | 501 | 502 | Angle | 0.00 | 7 | 7 | - | - | - | - | 3.820 | X |
| 601 | Beam | 601 | 602 | Angle | 0.00 | 8 | 8 | - | - | - | - | 3.820 | X |
| 701 | Beam | 701 | 702 | Angle | 0.00 | 9 | 9 | - | - | - | - | 3.820 | X |

## 1.8 NODAL SUPPORTS

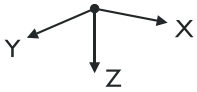


| Support No. | Nodes No. | Rotation [°] about Y | Support or Spring [kN/m] [kNm/rad] $u_{X'}$ | $u_{Z'}$ | $\varphi_{Y'}$ | Comment |
|---|---|---|---|---|---|---|
| 1 | 1 | 0.00 | ☒ | ☒ | ☐ | |
| 2 | 2 | 0.00 | ☐ | ☒ | ☐ | |
| 3 | 101 | 0.00 | ☒ | ☒ | ☐ | |
| 4 | 102 | 0.00 | ☐ | ☒ | ☐ | |
| 5 | 201 | 0.00 | ☒ | ☒ | ☐ | |
| 6 | 202 | 0.00 | ☐ | ☒ | ☐ | |
| 7 | 301 | 0.00 | ☒ | ☒ | ☐ | |
| 8 | 302 | 0.00 | ☐ | ☒ | ☐ | |
| 9 | 401 | 0.00 | ☒ | ☒ | ☐ | |
| 10 | 402 | 0.00 | ☐ | ☒ | ☐ | |
| 11 | 501 | 0.00 | ☒ | ☒ | ☐ | |
| 12 | 502 | 0.00 | ☐ | ☒ | ☐ | |
| 13 | 601 | 0.00 | ☒ | ☒ | ☐ | |
| 14 | 602 | 0.00 | ☐ | ☒ | ☐ | |
| 15 | 701 | 0.00 | ☒ | ☒ | ☐ | |
| 16 | 702 | 0.00 | ☐ | ☒ | ☐ | |

## 2.1 LOAD CASES

| Load Case | Load Case Description | ASCE 7-16 Action Category | Self-Weight - Factor in Direction Active | X | Y | Z |
|---|---|---|---|---|---|---|
| LC1 | Construction stage, self-weight in construction stage | Dead | ☐ | | | |
| LC2 | Construction stage, variable load, in zone 1 | Dead | ☐ | | | |
| LC3 | Self-weight | Dead | ☐ | | | |
| LC4 | Fixed load | Dead | ☐ | | | |
| LC5 | Long-term Variable Load,Live Load in span No. 301 | Live | ☐ | | | |
| LC6 | Short-term Variable Load,Live Load in span No. 401 | Live | ☐ | | | |
| LC7 | Shrinkage | Dead | ☐ | | | |

## 2.1.1 LOAD CASES - CALCULATION PARAMETERS

| Load Case | Load Case Description | Calculation Parameters |
|---|---|---|
| LC1 | Construction stage, self-weight in construction stage | Method of analysis : ◉ Geometrically linear analysis |
| LC2 | Construction stage, variable load, in zone 1 | Method of analysis : ◉ Geometrically linear analysis |
| LC3 | Self-weight | Method of analysis : ◉ Geometrically linear analysis |
| LC4 | Fixed load | Method of analysis : ◉ Geometrically linear analysis |
| LC5 | Long-term Variable Load,Live Load in span No. 301 | Method of analysis : ◉ Geometrically linear analysis |
| LC6 | Short-term Variable Load,Live Load in span No. 401 | Method of analysis : ◉ Geometrically linear analysis |
| LC7 | Shrinkage | Method of analysis : ◉ Geometrically linear analysis |

## 2.6 RESULT COMBINATIONS

| Result Combin | Description | Loading |
|---|---|---|
| RC1 | ULS -Construction Stage - All Variable Load (V) | 1.5*LC2 |
| RC2 | ULS -Construction Stage V + M | 0.9*RC1 |
| RC3 | ULS -Construction Stage | 1.35*LC1/p + RC1 or RC2 |
| RC4 | ULS -Variable Load - Live Load | 1.5*LC5 + 1.5*LC6 |

## 2.6 RESULT COMBINATIONS

| Result Combin | Description | Loading |
|---|---|---|
| RC5 | ULS -All Variable Load | 0.9*RC4 |
| RC6 | Ultimate Limit State | 1.35*LC3/p + 1.35*LC4/p + RC4 or RC5 |
| RC7 | SLS -Construction Stage - All Variable Load (V) | LC2 |
| RC8 | SLS -Construction Stage V + M | 0.9*RC7 |
| RC9 | SLS -Construction Stage | LC1/p + RC7 or RC8 |
| RC10 | SLS -Variable Load - Live Load | LC5 + LC6 |
| RC11 | SLS -All Variable Load | 0.9*RC10 |
| RC12 | Serviceability Limit States (SLS) | LC3/p + LC4/p + LC7 + RC10 or RC11 |

**LC1**
Construction stage, self-weight in construction stage

## 3.2 MEMBER LOADS — LC1

| No. | Reference to | On Members No. | Load Type | Load Distribution | Load Direction | Reference Length | Load Parameters Symbol | Value | Unit |
|---|---|---|---|---|---|---|---|---|---|
| 1 | Members | 1 | Force | Uniform | z | True Length | p | 5.791 | kN/m |

**LC2**
Construction stage, variable load, in zone 1

## 3.2 MEMBER LOADS — LC2

| No. | Reference to | On Members No. | Load Type | Load Distribution | Load Direction | Reference Length | Load Parameters Symbol | Value | Unit |
|---|---|---|---|---|---|---|---|---|---|
| 1 | Members | 1 | Force | Trapezoidal | z | True Length | $p_1$ | 0.750 | kN/m |
| | | | | | | | $p_2$ | 0.750 | kN/m |
| | | | | | | | A | 0.000 | m |
| | | | | | | | B | 0.410 | m |
| 2 | Members | 1 | Force | Trapezoidal | z | True Length | $p_1$ | 0.750 | kN/m |
| | | | | | | | $p_2$ | 0.750 | kN/m |
| | | | | | | | A | 0.410 | m |
| | | | | | | | B | 3.410 | m |
| 3 | Members | 1 | Force | Trapezoidal | z | True Length | $p_1$ | 0.750 | kN/m |
| | | | | | | | $p_2$ | 0.750 | kN/m |
| | | | | | | | A | 3.410 | m |
| | | | | | | | B | 3.820 | m |

**LC3**
Self-weight

## 3.2 MEMBER LOADS — LC3: Self-weight

| No. | Reference to | On Members No. | Load Type | Load Distribution | Load Direction | Reference Length | Load Parameters Symbol | Value | Unit |
|---|---|---|---|---|---|---|---|---|---|
| 1 | Members | 101 | Force | Trapezoidal | z | True Length | $p_1$ | 5.576 | kN/m |
| | | | | | | | $p_2$ | 5.576 | kN/m |
| | | | | | | | A | 0.000 | m |
| | | | | | | | B | 3.820 | m |

**LC4**
Fixed load

## 3.2 MEMBER LOADS — LC4: Fixed load

| No. | Reference to | On Members No. | Load Type | Load Distribution | Load Direction | Reference Length | Load Parameters Symbol | Value | Unit |
|---|---|---|---|---|---|---|---|---|---|
| 1 | Members | 201 | Force | Trapezoidal | z | True Length | $p_1$ | 5.940 | kN/m |
| | | | | | | | $p_2$ | 5.940 | kN/m |
| | | | | | | | A | 0.000 | m |
| | | | | | | | B | 3.820 | m |

**LC5**
Long-term Variable Load,Live Load in span No. 301

## 3.2 MEMBER LOADS — LC5

| No. | Reference to | On Members No. | Load Type | Load Distribution | Load Direction | Reference Length | Load Parameters Symbol | Value | Unit |
|---|---|---|---|---|---|---|---|---|---|
| 1 | Members | 301 | Force | Trapezoidal | z | True Length | $p_1$ | 3.564 | kN/m |
| | | | | | | | $p_2$ | 3.564 | kN/m |
| | | | | | | | A | 0.000 | m |
| | | | | | | | B | 3.820 | m |

**LC6**
Short-term Variable Load,Live Load in span No. 401

## 3.2 MEMBER LOADS — LC6

| No. | Reference to | On Members No. | Load Type | Load Distribution | Load Direction | Reference Length | Load Parameters Symbol | Value | Unit |
|---|---|---|---|---|---|---|---|---|---|
| 1 | Members | 401 | Force | Trapezoidal | z | True Length | $p_1$ | 3.564 | kN/m |
| | | | | | | | $p_2$ | 3.564 | kN/m |
| | | | | | | | A | 0.000 | m |
| | | | | | | | B | 3.820 | m |

## 3.1 NODAL LOADS - BY COMPONENTS - COORDINATE SYSTEM

LC7: Shrinkage

**LC7**
Shrinkage

| No. | On Nodes No. | Coordinate System | Force [kN] $P_X$ / $P_U$ | Force [kN] $P_Z$ / $P_W$ | Moment $M_Y$ / $M_V$ [kNm] |
|---|---|---|---|---|---|
| 1 | 501 | 0 \| Global XYZ | 0.000 | 0.000 | -45.610 |
| | oo | | | | |
| 2 | 502 | 0 \| Global XYZ | 0.000 | 0.000 | 45.610 |
| | oo | | | | |

## 4.0 RESULTS - SUMMARY

| | Description | Value | Unit | Comment |
|---|---|---|---|---|
| | LC1 - Construction stage, self-weight in construction stage | | | |
| | Sum of loads in X | 0.00 | kN | |
| | Sum of support reactions in X | 0.00 | kN | |
| | Sum of loads in Z | 22.12 | kN | |
| | Sum of support reactions in Z | 22.12 | kN | Deviation -0.00% |
| | Resultant of reactions about X | 0.00 | kNm | At center of gravity of model (X:1.91, Y:0.00, Z:9.02 m) |
| | Resultant of reactions about Y | 0.00 | kNm | At center of gravity of model |
| | Resultant of reactions about Z | 0.00 | kNm | At center of gravity of model |
| | Max displacement in X | 0.0 | mm | |
| | Max displacement in Z | 5.9 | mm | Member No. 1, x: 1.910 m |
| | Max vectorial displacement | 5.9 | mm | Member No. 1, x: 1.910 m |
| | Max rotation about Y | -4.9 | mrad | Member No. 1, x: 0.000 m |
| | Method of analysis | Linear | | Geometrically linear analysis |
| | Stiffness reduction multiplied by coefficient | ☐ | | |
| | Number of load increments | 1 | | |
| | Number of iterations | 1 | | |
| | LC2 - Construction stage, variable load, in zone 1 | | | |
| | Sum of loads in X | 0.00 | kN | |
| | Sum of support reactions in X | 0.00 | kN | |
| | Sum of loads in Z | 2.87 | kN | |
| | Sum of support reactions in Z | 2.87 | kN | Deviation -0.00% |
| | Resultant of reactions about X | 0.00 | kNm | At center of gravity of model (X:1.91, Y:0.00, Z:9.02 m) |
| | Resultant of reactions about Y | 0.00 | kNm | At center of gravity of model |
| | Resultant of reactions about Z | 0.00 | kNm | At center of gravity of model |
| | Max displacement in X | 0.0 | mm | |
| | Max displacement in Z | 0.8 | mm | Member No. 1, x: 1.910 m |
| | Max vectorial displacement | 0.8 | mm | Member No. 1, x: 1.910 m |
| | Max rotation about Y | -0.6 | mrad | Member No. 1, x: 0.000 m |
| | Method of analysis | Linear | | Geometrically linear analysis |
| | Stiffness reduction multiplied by coefficient | ☐ | | |
| | Number of load increments | 1 | | |
| | Number of iterations | 1 | | |
| | LC3 - Self-weight | | | |
| | Sum of loads in X | 0.00 | kN | |
| | Sum of support reactions in X | 0.00 | kN | |
| | Sum of loads in Z | 21.30 | kN | |
| | Sum of support reactions in Z | 21.30 | kN | Deviation -0.00% |
| | Resultant of reactions about X | 0.00 | kNm | At center of gravity of model (X:1.91, Y:0.00, Z:9.02 m) |
| | Resultant of reactions about Y | 0.00 | kNm | At center of gravity of model |
| | Resultant of reactions about Z | 0.00 | kNm | At center of gravity of model |
| | Max displacement in X | 0.0 | mm | |
| | Max displacement in Z | 5.7 | mm | Member No. 101, x: 1.910 m |
| | Max vectorial displacement | 5.7 | mm | Member No. 101, x: 1.910 m |
| | Max rotation about Y | -4.7 | mrad | Member No. 101, x: 0.000 m |
| | Method of analysis | Linear | | Geometrically linear analysis |
| | Stiffness reduction multiplied by coefficient | ☐ | | |
| | Number of load increments | 1 | | |
| | Number of iterations | 1 | | |
| | LC4 - Fixed load | | | |
| | Sum of loads in X | 0.00 | kN | |
| | Sum of support reactions in X | 0.00 | kN | |
| | Sum of loads in Z | 22.69 | kN | |
| | Sum of support reactions in Z | 22.69 | kN | Deviation -0.00% |
| | Resultant of reactions about X | 0.00 | kNm | At center of gravity of model (X:1.91, Y:0.00, Z:9.02 m) |
| | Resultant of reactions about Y | 0.00 | kNm | At center of gravity of model |
| | Resultant of reactions about Z | 0.00 | kNm | At center of gravity of model |
| | Max displacement in X | 0.0 | mm | |
| | Max displacement in Z | 1.4 | mm | Member No. 201, x: 1.910 m |
| | Max vectorial displacement | 1.4 | mm | Member No. 201, x: 1.910 m |
| | Max rotation about Y | -1.2 | mrad | Member No. 201, x: 0.000 m |
| | Method of analysis | Linear | | Geometrically linear analysis |
| | Stiffness reduction multiplied by coefficient | ☐ | | |
| | Number of load increments | 1 | | |
| | Number of iterations | 1 | | |
| | LC5 - Long-term Variable Load,Live Load in span No. 301 | | | |
| | Sum of loads in X | 0.00 | kN | |
| | Sum of support reactions in X | 0.00 | kN | |
| | Sum of loads in Z | 13.61 | kN | |
| | Sum of support reactions in Z | 13.61 | kN | Deviation -0.00% |
| | Resultant of reactions about X | 0.00 | kNm | At center of gravity of model (X:1.91, Y:0.00, Z:9.02 m) |
| | Resultant of reactions about Y | 0.00 | kNm | At center of gravity of model |
| | Resultant of reactions about Z | 0.00 | kNm | At center of gravity of model |
| | Max displacement in X | 0.0 | mm | |
| | Max displacement in Z | 0.8 | mm | Member No. 301, x: 1.910 m |
| | Max vectorial displacement | 0.8 | mm | Member No. 301, x: 1.910 m |
| | Max rotation about Y | -0.7 | mrad | Member No. 301, x: 0.000 m |
| | Method of analysis | Linear | | Geometrically linear analysis |
| | Stiffness reduction multiplied by coefficient | ☐ | | |
| | Number of load increments | 1 | | |
| | Number of iterations | 1 | | |
| | LC6 - Short-term Variable Load,Live Load in span No. 401 | | | |
| | Sum of loads in X | 0.00 | kN | |
| | Sum of support reactions in X | 0.00 | kN | |
| | Sum of loads in Z | 13.61 | kN | |
| | Sum of support reactions in Z | 13.61 | kN | Deviation -0.00% |
| | Resultant of reactions about X | 0.00 | kNm | At center of gravity of model (X:1.91, Y:0.00, Z:9.02 m) |
| | Resultant of reactions about Y | 0.00 | kNm | At center of gravity of model |
| | Resultant of reactions about Z | 0.00 | kNm | At center of gravity of model |
| | Max displacement in X | 0.0 | mm | |
| | Max displacement in Z | 0.6 | mm | Member No. 401, x: 1.910 m |
| | Max vectorial displacement | 0.6 | mm | Member No. 401, x: 1.910 m |

## 4.0 RESULTS - SUMMARY

| | Description | Value | Unit | Comment |
|---|---|---|---|---|
| | Max rotation about Y | -0.5 | mrad | Member No. 401, x: 0.000 m |
| | Method of analysis | Linear | | Geometrically linear analysis |
| | Stiffness reduction multiplied by coefficient | ☐ | | |
| | Number of load increments | 1 | | |
| | Number of iterations | 1 | | |
| | LC7 - Shrinkage | | | |
| | Sum of loads in X | 0.00 | kN | |
| | Sum of support reactions in X | 0.00 | kN | |
| | Sum of loads in Z | 0.00 | kN | |
| | Sum of support reactions in Z | 0.00 | kN | |
| | Resultant of reactions about X | 0.00 | kNm | At center of gravity of model (X:1.91, Y:0.00, Z:9.02 m) |
| | Resultant of reactions about Y | 0.00 | kNm | At center of gravity of model |
| | Resultant of reactions about Z | 0.00 | kNm | At center of gravity of model |
| | Max displacement in X | 0.0 | mm | |
| | Max displacement in Z | 4.7 | mm | Member No. 501, x: 1.910 m |
| | Max vectorial displacement | 4.7 | mm | Member No. 501, x: 1.910 m |
| | Max rotation about Y | -5.0 | mrad | Member No. 501, x: 0.000 m |
| | Method of analysis | Linear | | Geometrically linear analysis |
| | Stiffness reduction multiplied by coefficient | ☐ | | |
| | Number of load increments | 1 | | |
| | Number of iterations | 1 | | |
| | Summary | | | |
| | Max displacement in X | 0.0 | mm | |
| | Max displacement in Z | 5.9 | mm | LC1, Member No. 1, x: 1.910 m |
| | Max vectorial displacement | 5.9 | mm | LC1, Member No. 1, x: 1.910 m |
| | Max rotation about Y | -5.0 | mrad | LC7, Member No. 501, x: 0.000 m |
| | Number of 1D finite elements (member elements) | 8 | | |
| | Number of FE mesh nodes | 16 | | |
| | Number of equations | 48 | | |
| | Max number of iterations | 100 | | |
| | Divisions of members for member results | 10 | | |
| | Divisions of cable, foundation, or tapered members | 10 | | |
| | Activate shear rigidity (A-y, A-z) of members | ☒ | | |

| | | | |
|---|---|---|---|
| Other Settings | Max number of iterations | : | 100 |
| | Number of divisions for member results | : | 10 |
| | Member divisions, cables, foundation or tapered members | : | 10 |
| | Number of member divisions for searching maximum values | : | 10 |
| Options | ☒ Activate shear stiffness of members (Ay, Az) | | |
| | ☒ Modify stiffness (material, cross-sections, members, load cases and combinations) | | |
| | ☒ Apply temperature/deformation load actions without stiffness modifications | | |
| Precision and Tolerance | ☐ Change default setting | | |

## 4.3 CROSS-SECTIONS - INTERNAL FORCES

| Member No. | LC/CO | Node No. | Location x [m] | Forces [kN] N | | $V_z$ | | Moments $M_y$ [kNm] | |
|---|---|---|---|---|---|---|---|---|---|
| | **Section No. 1: IPE 180 \| Euronorm 19-57** | | | | | | | | |
| 1 | LC1 | MAX N | 0.000 | ▷ 0.00 | | 11.06 | | 0.00 | |
| 1 | LC1 | MIN N | 0.000 | ▷ 0.00 | | 11.06 | | 0.00 | |
| 1 | LC1 | MAX $V_z$ | 0.000 | 0.00 | ▷ | 11.06 | | 0.00 | |
| 1 | LC1 | MIN $V_z$ | 3.820 | 0.00 | ▷ | -11.06 | | 0.00 | |
| 1 | LC1 | MAX $M_y$ | 1.910 | 0.00 | | 0.00 | ▷ | 10.56 | |
| 1 | LC1 | MIN $M_y$ | 0.000 | 0.00 | | 11.06 | ▷ | 0.00 | |
| | **Section No. 3: IPE 180 \| Euronorm 19-57** | | | | | | | | |
| 101 | LC1 | MAX N | 0.000 | ▷ 0.00 | | 0.00 | | 0.00 | |
| 101 | LC1 | MIN N | 0.000 | ▷ 0.00 | | 0.00 | | 0.00 | |
| 101 | LC3 | MAX $V_z$ | 0.000 | 0.00 | ▷ | 10.65 | | 0.00 | |
| 101 | LC3 | MIN $V_z$ | 3.820 | 0.00 | ▷ | -10.65 | | 0.00 | |
| 101 | LC3 | MAX $M_y$ | 1.910 | 0.00 | | 0.00 | ▷ | 10.17 | |
| 101 | LC1 | MIN $M_y$ | 0.000 | 0.00 | | 0.00 | ▷ | 0.00 | |
| | **Section No. 4: Cross-section 4** | | | | | | | | |
| 201 | LC1 | MAX N | 0.000 | ▷ 0.00 | | 0.00 | | 0.00 | |
| 201 | LC1 | MIN N | 0.000 | ▷ 0.00 | | 0.00 | | 0.00 | |
| 201 | LC4 | MAX $V_z$ | 0.000 | 0.00 | ▷ | 11.35 | | 0.00 | |
| 201 | LC4 | MIN $V_z$ | 3.820 | 0.00 | ▷ | -11.35 | | 0.00 | |
| 201 | LC4 | MAX $M_y$ | 1.910 | 0.00 | | 0.00 | ▷ | 10.83 | |
| 201 | LC4 | MIN $M_y$ | 0.000 | 0.00 | | 11.35 | ▷ | 0.00 | |
| | **Section No. 5: Cross-section 5** | | | | | | | | |
| 301 | LC1 | MAX N | 0.000 | ▷ 0.00 | | 0.00 | | 0.00 | |
| 301 | LC1 | MIN N | 0.000 | ▷ 0.00 | | 0.00 | | 0.00 | |
| 301 | LC5 | MAX $V_z$ | 0.000 | 0.00 | ▷ | 6.81 | | 0.00 | |
| 301 | LC5 | MIN $V_z$ | 3.820 | 0.00 | ▷ | -6.81 | | 0.00 | |
| 301 | LC5 | MAX $M_y$ | 1.910 | 0.00 | | 0.00 | ▷ | 6.50 | |
| 301 | LC5 | MIN $M_y$ | 0.000 | 0.00 | | 6.81 | ▷ | 0.00 | |
| | **Section No. 6: Cross-section 6** | | | | | | | | |
| 401 | LC1 | MAX N | 0.000 | ▷ 0.00 | | 0.00 | | 0.00 | |
| 401 | LC1 | MIN N | 0.000 | ▷ 0.00 | | 0.00 | | 0.00 | |
| 401 | LC6 | MAX $V_z$ | 0.000 | 0.00 | ▷ | 6.81 | | 0.00 | |
| 401 | LC6 | MIN $V_z$ | 3.820 | 0.00 | ▷ | -6.81 | | 0.00 | |
| 401 | LC6 | MAX $M_y$ | 1.910 | 0.00 | | 0.00 | ▷ | 6.50 | |
| 401 | LC1 | MIN $M_y$ | 0.000 | 0.00 | | 0.00 | ▷ | 0.00 | |
| | **Section No. 7: Cross-section 7** | | | | | | | | |
| 501 | LC1 | MAX N | 0.000 | ▷ 0.00 | | 0.00 | | 0.00 | |
| 501 | LC1 | MIN N | 0.000 | ▷ 0.00 | | 0.00 | | 0.00 | |

## 4.3 CROSS-SECTIONS - INTERNAL FORCES

| Member No. | LC/CO | Node No. | Location x [m] | Forces [kN] N | Forces [kN] $V_z$ | Moments $M_y$ [kNm] |
|---|---|---|---|---|---|---|
| 501 | LC1 | MAX $V_z$ | 0.000 | 0.00 | 0.00 | 0.00 |
| 501 | LC1 | MIN $V_z$ | 0.000 | 0.00 | 0.00 | 0.00 |
| 501 | LC7 | MAX $M_y$ | 0.000 | 0.00 | 0.00 | 45.61 |
| 501 | LC1 | MIN $M_y$ | 0.000 | 0.00 | 0.00 | 0.00 |
| | **Section No. 8: IPE 180 \| Euronorm 19-57** | | | | | |
| 601 | LC1 | MAX N | 0.000 | 0.00 | 0.00 | 0.00 |
| 601 | LC1 | MIN N | 0.000 | 0.00 | 0.00 | 0.00 |
| 601 | LC1 | MAX $V_z$ | 0.000 | 0.00 | 0.00 | 0.00 |
| 601 | LC1 | MIN $V_z$ | 0.000 | 0.00 | 0.00 | 0.00 |
| 601 | LC1 | MAX $M_y$ | 0.000 | 0.00 | 0.00 | 0.00 |
| 601 | LC1 | MIN $M_y$ | 0.000 | 0.00 | 0.00 | 0.00 |
| | **Section No. 9: Cross-section 9** | | | | | |
| 701 | LC1 | MAX N | 0.000 | 0.00 | 0.00 | 0.00 |
| 701 | LC1 | MIN N | 0.000 | 0.00 | 0.00 | 0.00 |
| 701 | LC1 | MAX $V_z$ | 0.000 | 0.00 | 0.00 | 0.00 |
| 701 | LC1 | MIN $V_z$ | 0.000 | 0.00 | 0.00 | 0.00 |
| 701 | LC1 | MAX $M_y$ | 0.000 | 0.00 | 0.00 | 0.00 |
| 701 | LC1 | MIN $M_y$ | 0.000 | 0.00 | 0.00 | 0.00 |

## 4.3 CROSS-SECTIONS - INTERNAL FORCES

Result Combinations

| Member No. | RC | Node No. | Location x [m] | | Forces [kN] N | Forces [kN] $V_z$ | Moments $M_y$ [kNm] | Corresponding Load Cases |
|---|---|---|---|---|---|---|---|---|
| | **Section No. 1: IPE 180 \| Euronorm 19-57** | | | | | | | |
| 1 | RC1 | | 0.000 | MAX N | 0.00 | 0.00 | 0.00 | |
| 1 | RC1 | | 0.000 | MIN N | 0.00 | 0.00 | 0.00 | |
| 1 | RC3 | | 0.000 | MAX $V_z$ | 0.00 | 17.08 | 0.00 | LC 1,2 |
| 1 | RC3 | | 3.820 | MIN $V_z$ | 0.00 | -17.08 | 0.00 | LC 1,2 |
| 1 | RC3 | | 1.910 | MAX $M_y$ | 0.00 | 0.00 | 16.31 | LC 1,2 |
| 1 | RC1 | | 0.000 | MIN $M_y$ | 0.00 | 0.00 | 0.00 | |
| | **Section No. 3: IPE 180 \| Euronorm 19-57** | | | | | | | |
| 101 | RC1 | | 0.000 | MAX N | 0.00 | 0.00 | 0.00 | |
| 101 | RC1 | | 0.000 | MIN N | 0.00 | 0.00 | 0.00 | |
| 101 | RC6 | | 0.000 | MAX $V_z$ | 0.00 | 14.38 | 0.00 | LC 3,4 |
| 101 | RC6 | | 3.820 | MIN $V_z$ | 0.00 | -14.38 | 0.00 | LC 3,4 |
| 101 | RC6 | | 1.910 | MAX $M_y$ | 0.00 | 0.00 | 13.73 | LC 3,4 |
| 101 | RC1 | | 0.000 | MIN $M_y$ | 0.00 | 0.00 | 0.00 | |
| | **Section No. 4: Cross-section 4** | | | | | | | |
| 201 | RC1 | | 0.000 | MAX N | 0.00 | 0.00 | 0.00 | |
| 201 | RC1 | | 0.000 | MIN N | 0.00 | 0.00 | 0.00 | |
| 201 | RC6 | | 0.000 | MAX $V_z$ | 0.00 | 15.32 | 0.00 | LC 3,4 |
| 201 | RC6 | | 3.820 | MIN $V_z$ | 0.00 | -15.32 | 0.00 | LC 3,4 |
| 201 | RC6 | | 1.910 | MAX $M_y$ | 0.00 | 0.00 | 14.63 | LC 3,4 |
| 201 | RC6 | | 0.000 | MIN $M_y$ | 0.00 | 15.32 | 0.00 | LC 3,4 |
| | **Section No. 5: Cross-section 5** | | | | | | | |
| 301 | RC1 | | 0.000 | MAX N | 0.00 | 0.00 | 0.00 | |
| 301 | RC1 | | 0.000 | MIN N | 0.00 | 0.00 | 0.00 | |
| 301 | RC4 | | 0.000 | MAX $V_z$ | 0.00 | 10.21 | 0.00 | LC 5 |
| 301 | RC4 | | 3.820 | MIN $V_z$ | 0.00 | -10.21 | 0.00 | LC 5 |
| 301 | RC4 | | 1.910 | MAX $M_y$ | 0.00 | 0.00 | 9.75 | LC 5 |
| 301 | RC1 | | 0.000 | MIN $M_y$ | 0.00 | 0.00 | 0.00 | |
| | **Section No. 6: Cross-section 6** | | | | | | | |
| 401 | RC1 | | 0.000 | MAX N | 0.00 | 0.00 | 0.00 | |
| 401 | RC1 | | 0.000 | MIN N | 0.00 | 0.00 | 0.00 | |
| 401 | RC4 | | 0.000 | MAX $V_z$ | 0.00 | 10.21 | 0.00 | LC 6 |
| 401 | RC4 | | 3.820 | MIN $V_z$ | 0.00 | -10.21 | 0.00 | LC 6 |
| 401 | RC4 | | 1.910 | MAX $M_y$ | 0.00 | 0.00 | 9.75 | LC 6 |
| 401 | RC1 | | 0.000 | MIN $M_y$ | 0.00 | 0.00 | 0.00 | |
| | **Section No. 7: Cross-section 7** | | | | | | | |
| 501 | RC1 | | 0.000 | MAX N | 0.00 | 0.00 | 0.00 | |
| 501 | RC1 | | 0.000 | MIN N | 0.00 | 0.00 | 0.00 | |
| 501 | RC1 | | 0.000 | MAX $V_z$ | 0.00 | 0.00 | 0.00 | |
| 501 | RC1 | | 0.000 | MIN $V_z$ | 0.00 | 0.00 | 0.00 | |
| 501 | RC12 | | 0.000 | MAX $M_y$ | 0.00 | 0.00 | 45.61 | LC 3,4,7 |
| 501 | RC1 | | 0.000 | MIN $M_y$ | 0.00 | 0.00 | 0.00 | |
| | **Section No. 8: IPE 180 \| Euronorm 19-57** | | | | | | | |
| 601 | RC1 | | 0.000 | MAX N | 0.00 | 0.00 | 0.00 | |
| 601 | RC1 | | 0.000 | MIN N | 0.00 | 0.00 | 0.00 | |
| 601 | RC1 | | 0.000 | MAX $V_z$ | 0.00 | 0.00 | 0.00 | |
| 601 | RC1 | | 0.000 | MIN $V_z$ | 0.00 | 0.00 | 0.00 | |
| 601 | RC1 | | 0.000 | MAX $M_y$ | 0.00 | 0.00 | 0.00 | |
| 601 | RC1 | | 0.000 | MIN $M_y$ | 0.00 | 0.00 | 0.00 | |
| | **Section No. 9: Cross-section 9** | | | | | | | |
| 701 | RC1 | | 0.000 | MAX N | 0.00 | 0.00 | 0.00 | |
| 701 | RC1 | | 0.000 | MIN N | 0.00 | 0.00 | 0.00 | |
| 701 | RC1 | | 0.000 | MAX $V_z$ | 0.00 | 0.00 | 0.00 | |
| 701 | RC1 | | 0.000 | MIN $V_z$ | 0.00 | 0.00 | 0.00 | |
| 701 | RC1 | | 0.000 | MAX $M_y$ | 0.00 | 0.00 | 0.00 | |
| 701 | RC1 | | 0.000 | MIN $M_y$ | 0.00 | 0.00 | 0.00 | |

**COMPOSITE-BEAM**
CA1
Design of composite beams

## GENERAL DATA

| | | | | | | | | |
|---|---|---|---|---|---|---|---|---|
| **Total Length of the Beam** | | | | | | | | |
| L | 3.820 | m | | | | | | |
| **Partial safety factor for the resistance at ULS** | | | | | | | | |
| $\gamma_c$ | 1.50 | | $\gamma_s$ | 1.15 | | $\gamma_v$ | 1.25 | |
| $\gamma_a$ | 1.10 | | $\gamma_{ap}$ | 1.10 | | | | |
| **Partial safety factor for loads** | | | | | | | | |
| $\gamma_G$ | 1.35 | | $\gamma_Q$ | 1.50 | | | | |
| **Design Values for SLS** | | | | | | | | |
| Lim L / $\delta$ | 250 | | min f | 3.00 | Hz | | | |
| **Precamber of the Beam for** | | | | | | | | |
| $\delta_{0,1}$ | 0 | % | $\delta_{0,3}$ | 0 | % | $\delta_{0,5}$ | 0 | % |
| $\delta_{0,2}$ | 0 | % | $\delta_{0,4}$ | 0 | % | | | |

## GEOMETRY

| Supp No. | Distance x [m] | Type of Support |
|---|---|---|
| 1 | 0.000 | Hinged |
| 2 | 3.820 | Hinged movable |

## MATERIAL DATA

| No. | Type of Material |
|---|---|
| 1 | Concrete C 25/30 |
| 2 | Reinforcement S 500 S |
| 3 | Steel S 355 |

## CONCRETE FLANGE

| Segment No. | Segment [m] from | to | Description of Material | Width [mm] b1 | b2 | Type of Slab |
|---|---|---|---|---|---|---|
| 1 | 0.000 | 3.820 | C 25/30 | 1188.0 | 1188.0 | Profiled steel sheeting |

| | | | | | | | | |
|---|---|---|---|---|---|---|---|---|
| **Parameters for Concrete Flange : 126/0/1/0** | | | | | | | | |
| $h_{ctot}$ | 126.0 | mm | a | 0.0 | mm | | | |
| **Profiled Steel Sheeting:GOST H 57-750-0.8 Positivlage - across** | | | | | | | | |
| $h_p$ | 57.0 | mm | $b_R$ | 187.5 | mm | $b_b$ | 44.0 | mm |
| $t_p$ | 0.8 | mm | $b_u$ | 93.0 | mm | | | |
| Consideration of profiled steel sheeting according to EC4 6.6.3 | | | | | | | | |
| Calc | ☐ | | Calc | ☐ | | | | |
| **Direction of Bars =across** | | | | | | | | |
| Calc | ☒ | | Calc | ☐ | | | | |

## REINFORCEMENT IN THE CONCRETE FLANGE

| Segment No. | Segment [m] from | to | Definition of Material | Type of Reinforcement |
|---|---|---|---|---|
| 1 | 0.000 | 3.820 | S 500 S | Mesh reinforcement |

| | | | | | | | |
|---|---|---|---|---|---|---|---|
| **Reinforcement parameter:Q257-A/0/1/1/0/20/20** | | | | | | | |
| Type | Q257-A | | Near | Across | $c_{Top}$ | 20.0 | mm |
| Dirb | Along | | $Pos_{Up}$ | ☒ | $Pos_{Bot}$ | ☐ | |

IPE 180

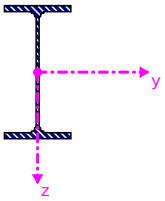


## REINFORCEMENT BAR

| | | |
|---|---|---|
| Description of Material | : | S 355 |
| Type of Profile -Rolled I-section | : | IPE 180 (EN) |
| Distance from Bottom of Concrete Flange | : | 0.0 mm |

## IPE 180 (EN)

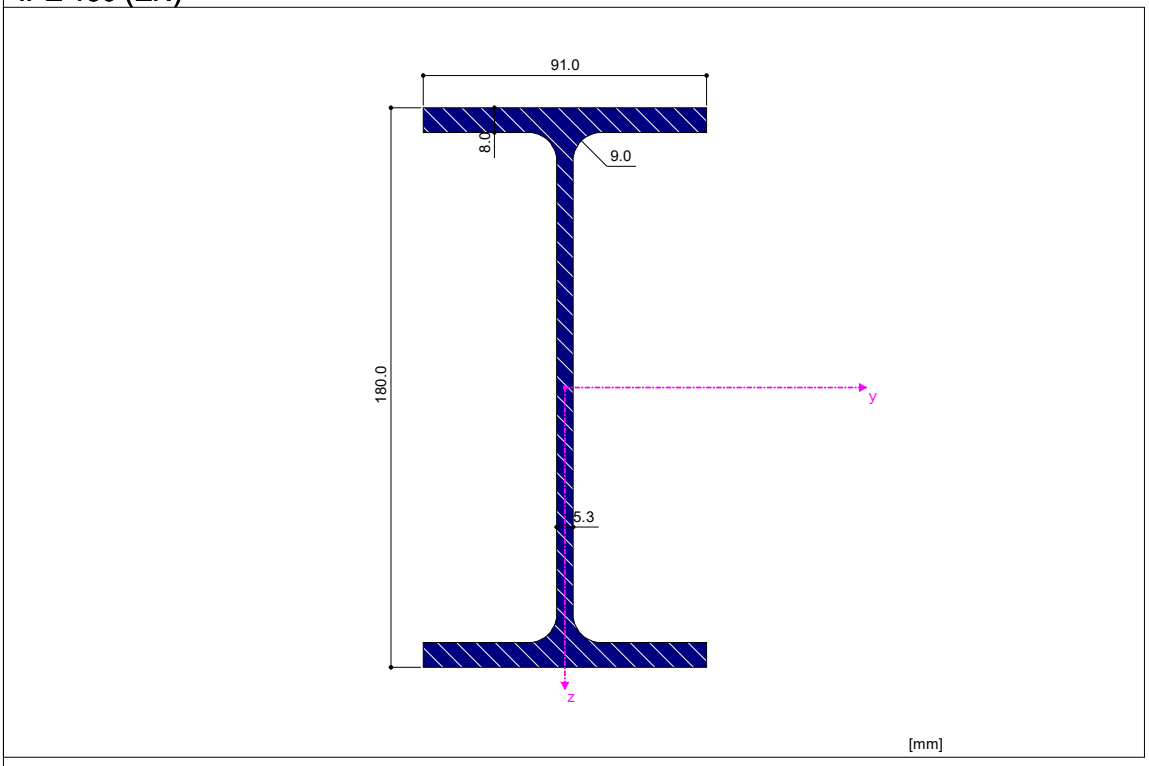


**COMPOSITE-BEAM**
CA1
Design of composite beams

## SHEAR CONNECTOR - SHEAR CONNECTOR FROM LIBRARY

| | Description | Symbol | Value | Unit | |
|---|---|---|---|---|---|
| | Bolt Diameter | d | 19.0 | mm | |
| | Total Length | h | 100.0 | mm | |
| | Maximum Number in Row | $N_r$ | 1 | - | |
| | Diameter of Head of a Stud | D | 32.0 | mm | |
| | Height of Head of a Stud | $h_d$ | 10.0 | mm | |
| | Ultimate Tensile Strength | $f_u$ | 450.0 | N/mm² | |

## LOAD WIDTH

| | Segment [m] | | Load Width [m] | | |
|---|---|---|---|---|---|
| | from | to | $e_1$ | $e_2$ | |
| | 0.000 | 3.820 | 1.188 | 1.188 | |

## COMPOSITE STAGE - SELF-WEIGHT

| No. | Segment [m] | | Load [kN/m] | | Note |
|---|---|---|---|---|---|
| | from | to | $g_{1,start}$ | $g_{1,end}$ | |
| 1 | 0.000 | 3.820 | 0.19 | 0.19 | Steel |
| 2 | 0.000 | 3.820 | 5.39 | 5.39 | Concrete Flange |

## COMPOSITE STAGE - FIXED LOAD

| No. | Segment [m] | | Load [kN/m²] | | |
|---|---|---|---|---|---|
| | from | to | $g_{2,start}$ | $g_{2,end}$ | |
| **Age of concrete by loading 28 days** | | | | | |
| 1 | 0.000 | 3.820 | 2.50 | 2.50 | |

## COMPOSITE STAGE - VARIABLE LOAD

| No. | Segment [m] | | Load [kN/m²] | | Load - type | Long-term Part [%] | |
|---|---|---|---|---|---|---|---|
| | from | to | $p_{start}$ | $p_{end}$ | | | |
| **Age of concrete by loading 90 days** | | | | | | | |
| 1 | 0.000 | 3.820 | 3.00 | 3.00 | Live Load | 50 | |

## CONSTRUCTION STAGE - SELF-WEIGHT

| No. | Segment [m] from | to | Self-weight $g_M$ [kN/m] |
|---|---|---|---|
| 1 | 0.000 | 3.820 | 0.19 |
| 2 | 0.000 | 3.820 | 5.60 |

## CONSTRUCTION STAGE - VARIABLE LOAD

| No. | Segment [m] from | to | Variable Load $p_{M1}$ [kN/m] |
|---|---|---|---|
| 1 | 0.000 | 3.820 | 0.75 |
| 2 | 0.410 | 3.410 | 0.00 |

## CALCULATION PARAMETER

| | | |
|---|---|---|
| | Bending Moment Distribution - Method | Uncracked along the entire beam |
| | Constant effective width of the concrete flange in whole support area according to EC4 4.2.2.1 (1) | ☒ |
| | Redistribution of moments | ☒ |
| | Limit to hogging moment redistribution for Class 1 | 40 % |
| | Limit to hogging moment redistribution for Class 2 | 30 % |
| | Limit to hogging moment redistribution for Class 3 | 20 % |
| | Limit to hogging moment redistribution for Class 4 | 10 % |
| | Exposure class | 1 - Dry environment |
| | The required concrete cover of shear connectors according to EC4, 6.4.1.2 (2) | ☒ |
| | Partial shear connection with application of ductile shear connectors according to EC4 6.2.1.2 | ☐ |
| | A steel compression flange that is restrained from buckling by effective attachment to a concrete flange by shear connectors, according to EC4 4.3.2(1), may be assumed to be in Class 1. | ☐ |
| | Advancement of cross-section from Class 3 to Class 2, if possible. | ☒ |

## BY CROSS-SECTION

| Span No. | Segment [m] from | to | Class of Cross-Section |
|---|---|---|---|
| 1 | 0.000 | 3.820 | 1 |

## CONSTRUCTION STAGE

| Span No. | x [m] | Design-Criterion |
|---|---|---|
| 1 | 1.910 | 0.3446 |

## ULTIMATE LIMIT STATE

| Span No. | x [m] | Design-Criterion |
|---|---|---|
| 1 | 1.910 | 0.4355 |

## SHEAR CONNECTING OF CONCRETE FLANGE

| No. | Segment [m] from | to | Number n |
|---|---|---|---|
| 1 | 0.000 | 0.477 | 2 |
| 2 | 0.477 | 0.955 | 2 |
| 3 | 0.955 | 1.910 | 3 |
| 4 | 1.910 | 2.865 | 3 |
| 5 | 2.865 | 3.342 | 2 |
| 6 | 3.342 | 3.820 | 2 |

## LONGITUDINAL SHEAR IN THE SLAB

| No. | Segment [m] from | to | Design-Criterion |
|---|---|---|---|
| 1 | 0.000 | 0.477 | 0.5637 |
| 2 | 0.477 | 0.955 | 0.4027 |
| 3 | 0.955 | 1.910 | 0.1611 |
| 4 | 1.910 | 2.865 | 0.1611 |
| 5 | 2.865 | 3.342 | 0.4027 |
| 6 | 3.342 | 3.820 | 0.5637 |

## SERVICEABILITY LIMIT STATES

| Span No. | x [m] | δ [mm] max | δ [mm] min | L / δ | |
|---|---|---|---|---|---|
| 1 | 0.000 | 0.0 | 0.0 | - | |
| | 1.910 | 13.3 | 11.9 | 286.0 | |

**SLS Check**

| | | | |
|---|---|---|---|
| Maximum Deflection | L / δ | 286.0 | >= 250.0 |
| Natural Frequency | f | 12.72 | >= 3.00 Hz |

## LATERAL-TORSIONAL BUCKLING

| Span No. | Segment[m] from | Segment[m] to | Design Criterio $M_{y.Sd}$ / $M_{b.Rd}$ | |
|---|---|---|---|---|
| 1 | 0.000 | 3.820 | - | |

## REACTIONS

| Supp No. | Distance x [m] | Type of Support | |
|---|---|---|---|
| 1 | 0.000 | Hinged | |
| 2 | 3.820 | Hinged movable | |

## SOVPREZNI NOSILEC IPE 180

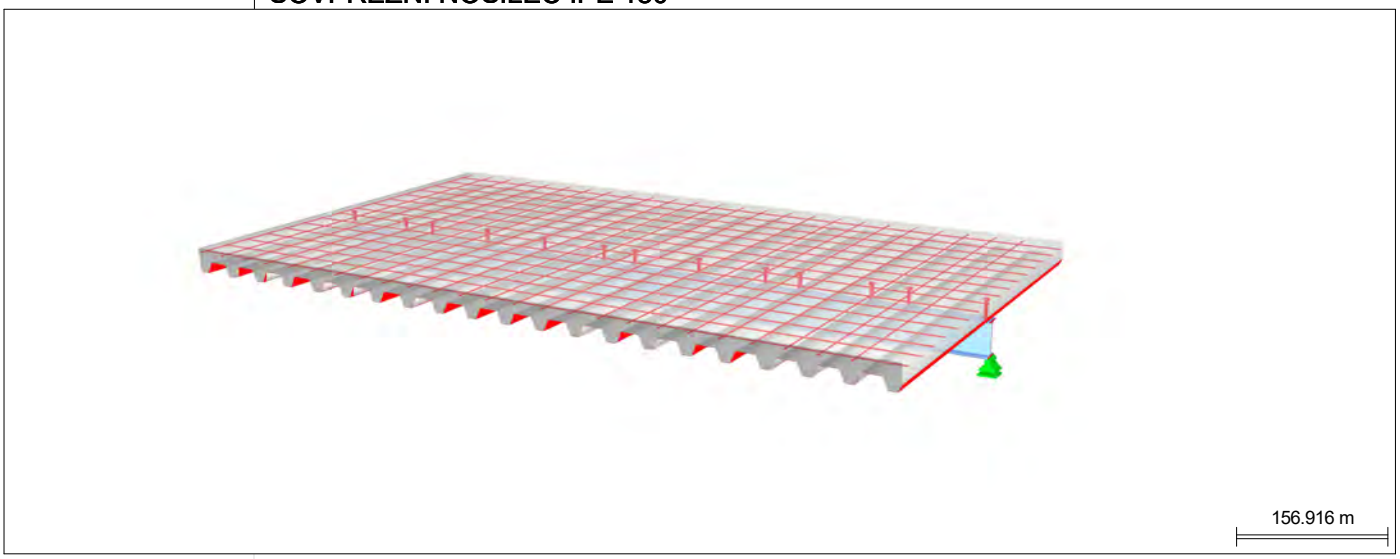


## SOVPREZNI NOSILEC IPE 180

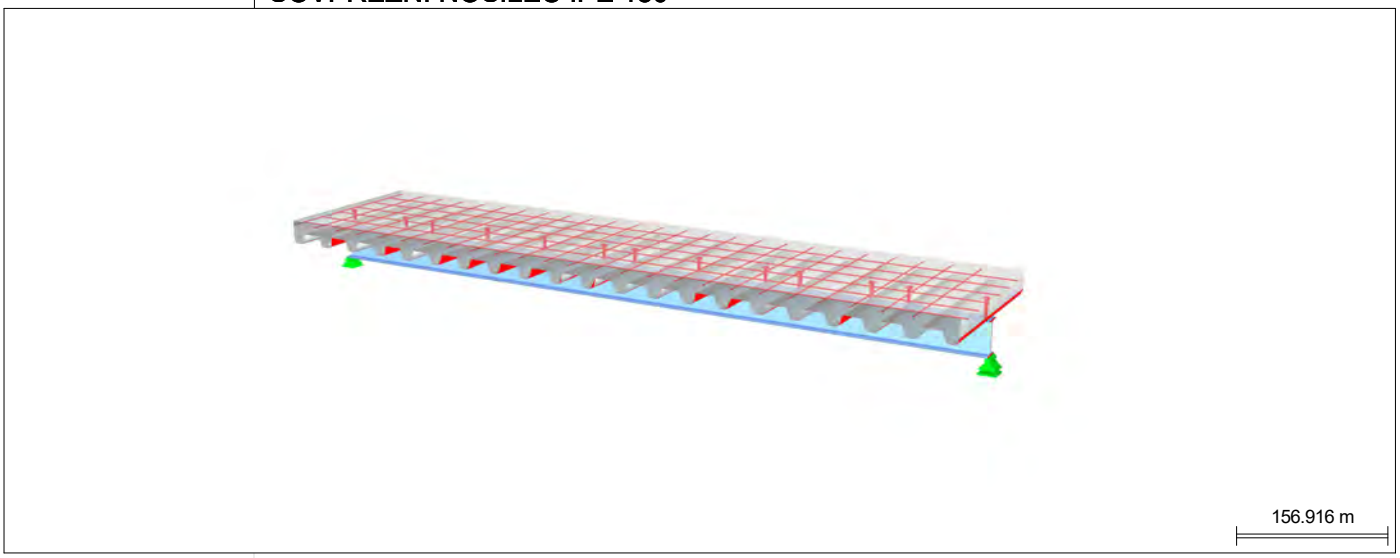

## FULL OUTPUT

**Note: Section designed according to EN1994-1**

### Construction stage

| | | | | |
|---|---|---|---|---|
| $\Gamma_{\delta}$ | = | 0.68 | <= 1.00 | Deflection |
| $\Gamma_{M,+}$ | = | 0.8 | <= 1.00 | Sagging bending moment |
| $\Gamma_{R,Ex}$ | = | 0.25 | <= 1.00 | Reaction at end support |
| $\Gamma_{M,-}$ | = | -1 | <= 1.00 | Hogging bending moment |
| $\Gamma_{R,C}$ | = | -1 | <= 1.00 | Reaction at internal support |
| $\Gamma_{RM}$ | = | -1 | <= 1.00 | Combined bending moment and support reaction |

### Composite slab

| | | | | |
|---|---|---|---|---|
| $\Gamma_{M+}$ | = | 0.27 | <= 1.00 | Sagging bending moment |
| $\Gamma_{M-}$ | = | -1 | <= 1.00 | Hogging bending moment |
| $\Gamma_{M-(L/3)}$ | = | -1 | <= 1.00 | Hogging bending moment at L/3 from internal support |
| $\Gamma_{LR1}$ | = | 0.3 | <= 1.00 | Longitudinal shear by partial connexion method |
| $\Gamma_{VR1}$ | = | 0.39 | <= 1.00 | Vertical shear - End support |
| $\Gamma_{VR2}$ | = | 0.39 | <= 1.00 | Vertical shear - internal support |
| $\Gamma_{FL}$ | = | 0.15 | <= 1.00 | Deflection control |
| $\Gamma_{Vi}$ | = | 0.19 | <= 1.00 | Vibration control |
| $\Gamma_{VP}$ | = | -1 | <= 1.00 | Punching |
| $\Gamma_{Fs}$ | = | 0.37 | <= 1.00 | Cracking control |

### Fire resistance

| | | | | |
|---|---|---|---|---|
| $\Gamma_{IST}$ | = | 0.44 | <= 1.00 | Thermal insulation |
| $\Gamma_{RF}$ | = | 0.41 | <= 1.00 | Load bearing criterion |
| $\Gamma_{RF(L/3)}$ | = | -1 | <= 1.00 | Load bearing criterion at L/3 from internal support |
| $\Gamma_{RF\_recommended}$ | = | -1 | <= 1.00 | Free span moment - recommended checking |

Note: Check imperatively whether the assumptions comply with project specifications and project plan.

## 1. Project Data

### a. Profile Data: cofraplus60 / 0.88mm / noperce

| Characteristics | Values | Unit |
|---|---|---|
| Thickness of profiled steel sheeting | 0.88 | mm |
| Self-weight of profiled steel sheeting | 10 | kg/m² |
| Height of profile | 58 | mm |
| Effective width of profile | 1035 | mm |
| Cross-sectional area of profile | 1067 | mm²/m |
| Second moment of area of the profile | 52.64 | cm4/m |
| Position of neutral axis of profile | 33.7 | mm |
| Reduction of concrete | 35 | mm |
| Sagging resistance moment of profile | 5.39 | kNm/m |
| End support reaction resistance of profile | 28.91 | kN/m |
| Internal support widths | 60, 160 | kN/m |
| Maximum hogging resistance moment of profile | 5.05, 5.95 | kNm/m |
| Maximum internal reaction resistance of profile | 28.14, 43.83 | kN/m |
| Empirical factor for design shear resistance (m) | 230.09 | N/mm² |
| Empirical factor for design shear resistance (k) | -0.06 | |
| Longitudinal shear strength of a composite slab $\tau_{u,Rk}$ | 0.1 | N/mm² |

### b. Composite slab

Spans:

| Span → | 1 | 2 | 3 | 4 | 5 |
|---|---|---|---|---|---|
| Span (m) | 2.38 | 2.38 | 2.38 | 2.38 | 2.38 |

| | | |
|---|---|---|
| Static system: | isostatique | |
| Overall slab depth: | 126 | (mm) |
| Screed: | 60 | (mm) |

### c. Construction stage

Number of spans / steel sheet:

| Steel sheet | 1 | 2 | 3 | 4 | 5 |
|---|---|---|---|---|---|
| Number spans | 1 | 1 | 1 | 1 | 1 |

Number of props/span:

| Span → | 1 | 2 | 3 | 4 | 5 |
|---|---|---|---|---|---|
| Number props | 0 | 0 | 0 | 0 | 0 |

Note: for N>0, prop must be placed at 1/(N+1) of span

| | | |
|---|---|---|
| Prop width: | | (mm) |
| End support width: | 50 | (mm) |
| Internal support width: | 91 | (mm) |

### d. Reinforcement data

| | | |
|---|---|---|
| Yield strength: | 500 | |
| Ductility class: | B | |
| Exposure class: | XC2 | |
| Structural class: | S2 | |
| Minimum cover: | 25 | (mm) |

| | | | | |
|---|---|---|---|---|
| Overall mesh: | 2.57 cm² | Cover: | 25 | (mm) |
| Reinforcement on support: | | Cover: | | (mm) |
| Repartition mesh: | | Cover: | 10 | (mm) |
| Reinforcement in the rib: | 8 in each rib | Cover: | 25 | (mm) |

Note: overall mesh shall be continuous on support

### e. Concrete data: normal / NC25/30

| | | |
|---|---|---|
| Concrete wet self weight | 25 | kN/m³ |
| Concrete dry self weight | 24 | kN/m³ |
| $F_{ck}$ | 25 | N/mm² |
| $F_{ctm}$ | 2.6 | N/mm² |
| $E_{cm}$ | 31000 | N/mm² |

### f. Project requirements

| | | |
|---|---|---|
| Shear bond method | | partielle |
| Deflection limit during construction | L / | 180 |
| Deflection limit in service | L / | 300 |
| Crack control | $W_{max}$ | 0.2 |
| Coefficient of moment redistribution | | 0 |
| Coefficient mass related to live load (frequency) | | 0.5 |
| Minimum frequency | | 3 |
| Fire resistance period | REI | 60 |
| Fire factor | $\Psi_{1,1} =$ | 0.5 |

### g. Loads acting on slab

- Uniformly distributed load

| Span → | 1 | 2 | 3 | 4 | 5 |
|---|---|---|---|---|---|
| Permanent loads $g_{per}$ (kN/m²) | 2.5 | 2.5 | 2.5 | 2.5 | 2.5 |
| Live load q (kN/m²) | 3 | 3 | 3 | 3 | 3 |

- Line loads perpendicular to deck span

Note: Any line load is considered

- Punctual loads

Note: Any concentrated load is considered

- Mobile axle load

| Note: Any mobile load is considered |
|---|

**h. Partial safety factor**

| **Material** | | | **Actions** | | |
|---|---|---|---|---|---|
| Steel sheet | $\gamma_M$ | 1.05 | Perm. load | $\gamma_0$ | 1.35 |
| Rebars | $\gamma_{sb}$ | 1.15 | Live load | $\gamma_q$ | 1.5 |
| Concrete | $\gamma_c$ | 1.5 | | | |
| Shearing | $\gamma_{vs}$ | 1.25 | | | |

## 2. Longitudinal section and cross-section

### Longitudinal section

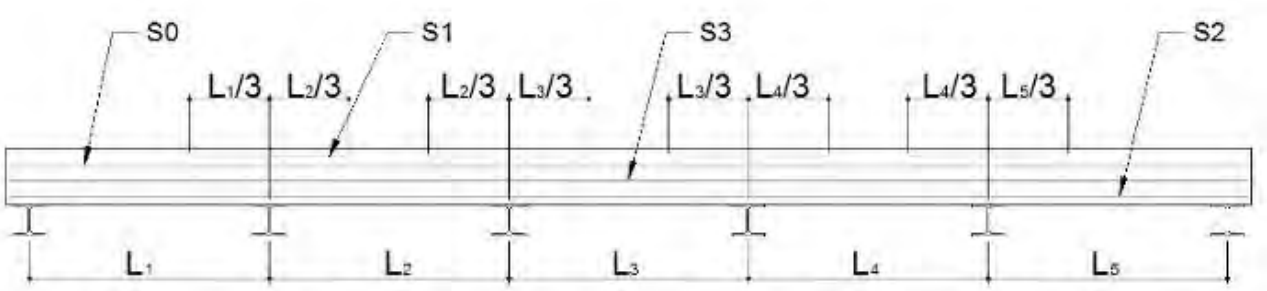


### Cross section

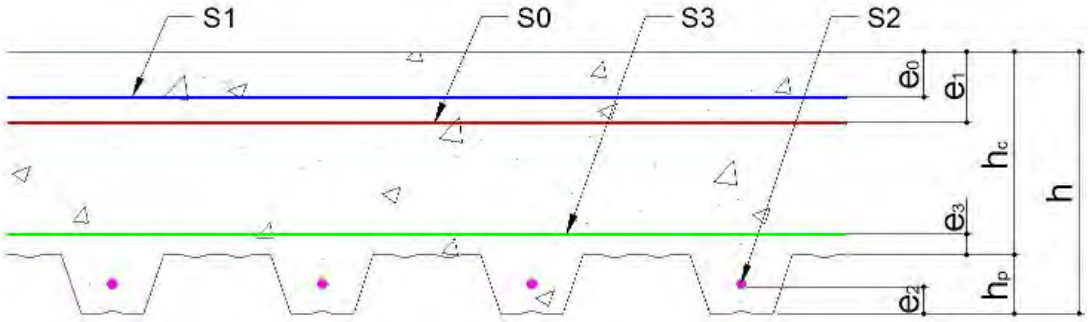


**Profile:** **cofraplus60 / 0.88mm / noperce**

| L1 (m) | L2 (m) | L3 (m) | L4 (m) | L5 (m) |
|---|---|---|---|---|
| 2.38 | 2.38 | 2.38 | 2.38 | 2.38 |

| | | |
|---|---|---|
| Anti-cracking mesh | $S_0$ | 2.57 cm² |
| Reinforcement on support | $S_1$ | |
| Reinforcement in the rib | $S_2$ | 8 in each rib |
| Repartition mesh | $S_3$ | |

| | | | |
|---|---|---|---|
| Slab depth | $h_t$ | 126 | mm |
| Profile height | $h_p$ | 58 | mm |
| Cover anti-cracking mesh | $e_0$ | 25 | mm |
| Cover reinforcement on support | $e_1$ | | mm |
| Cover reinforcement in the rib | $e_2$ | 25 | mm |
| Cover repartition mesh | $e_3$ | 10 | mm |

## 3. Details EN

IMPLEMENTATION OF THE COMPOSITE DECK: Supports, props, fasteners, openings, etc. ... shall comply with the rules of Art, the guidance in "Prescription of technical requirements - CPT" and in various documents of ArcelorMittal Construction

CONCRETE: The implementation of concrete by pump is recommended. Otherwise, the concrete must be poured on the bearing elements without excessive accumulation, and immediately leveled to the depth planned.

| | | |
|---|---|---|
| Consumption of concrete | 91 | Litres/m² |
| Total weight of the slab | 237.5 | kg/m² |
| Overall mesh | 0 | kg/m² |
| Reinforcement on support | 0 | kg/m² |
| Repartition mesh | 0 | kg/m² |
| Reinforcement in the rib | 1.91 | kg/m² |

Note: The quantity above are given for information, more accurate values can be calculated taking into account real conditions of the implementation on site.

## 4. Construction stage

### a. Loadings

| | Unfactored (Kn/m²) |
|---|---|
| Self weight of decking | 0.1 |
| Self weight of concrete slab | 2.27 |
| Construction load (working area 3mx3m) | 1.5 |
| Construction load (outside working area) | 0.75 |

### b. Deflection checking

- Maximum deflection under self weight of decking and wet concrete slab:

| Steel sheet | 1 | 2 | 3 | 4 | 5 |
|---|---|---|---|---|---|
| $f_0$ (mm) (without PEF) | 8.9 | 8.9 | 8.9 | 8.9 | 8.9 |
| Additional weight (kN/m²) | 0 | 0 | 0 | 0 | 0 |
| Selfweight of slab (kN/m²) | 2.38 | 2.38 | 2.38 | 2.38 | 2.38 |
| $f_{alw}$ (mm) (allowed) | 13.19 | 13.19 | 13.19 | 13.19 | 13.19 |
| $f_{max}$ (mm) (with PEF, if any) | 8.9 | 8.9 | 8.9 | 8.9 | 8.9 |
| $f_{max\ /\ falw}$ | 0.67 | 0.67 | 0.67 | 0.67 | 0.67 |

Unity factor: $\frac{f_{max}}{f_{allowed}} =$ 0.68 <= 1.00 Pass

### c. Sagging bending resistance check

| Steel sheet | 1 | 2 | 3 | 4 | 5 |
|---|---|---|---|---|---|
| Max applied moment: $M_{Edp}$ | 4.09 | 4.09 | 4.09 | 4.09 | 4.09 |
| Moment resistance: $M_{Rdp}$ | 5.14 | 5.14 | 5.14 | 5.14 | 5.14 |
| $M_{Edp}$ / $M_{Rdp}$ | 0.8 | 0.8 | 0.8 | 0.8 | 0.8 |

Unity factor: $\frac{M_{Edp}}{M_{Rdp}} =$ 0.8 <= 1.00 Pass

### d. End support reaction

| Steel sheet | 1 | 2 | 3 | 4 | 5 |
|---|---|---|---|---|---|
| Max applied reaction: $R_{Ed, En}$ | 6.89 | 6.89 | 6.89 | 6.89 | 6.89 |
| Web crippling resistance: $R_{Rd, En}$ | 27.53 | 27.53 | 27.53 | 27.53 | 27.53 |
| $R_{Ed, En}$ / $E_{Rd, En}$ | 0.25 | 0.25 | 0.25 | 0.25 | 0.25 |

Unity factor: $\frac{R_{Ed,En}}{R_{Rd,En}} =$ 0.25 <= 1.00 Pass

### e. Hogging bending resistance check

| Steel sheet | 1 | 2 | 3 | 4 | 5 |
|---|---|---|---|---|---|
| Max applied reaction: $R_{Ed, En}$ | -0 | -0 | -0 | -0 | -0 |
| Moment resistance: $M_{Rdn}$ | -0 | -0 | -0 | -0 | -0 |
| $R_{Ed, En}$ / $E_{Rd, En}$ | -1 | -1 | -1 | -1 | -1 |

Unity factor: $\frac{M_{Edn}}{M_{Rdn}} =$ -1 <= 1.00 Pass

### f. Internal support reaction

| Steel sheet | 1 | 2 | 3 | 4 | 5 |
|---|---|---|---|---|---|
| Max applied reaction: $R_{Ed, In}$ | -0.01 | -0.01 | -0.01 | -0.01 | |
| Web crippling resistance: $R_{Rd, In}$ | -0.01 | -0.01 | -0.01 | -0.01 | -0.01 |
| $R_{Ed, In}$ / $R_{Rd, In}$ | -1 | -1 | -1 | -1 | -1 |

Unity factor: $\frac{R_{Ed,In}}{R_{Rd,In}} =$ -1 <= 1.00 Pass

### g. Interaction bending moment - reaction

| Steel sheet | 1 | 2 | 3 | 4 | 5 |
|---|---|---|---|---|---|
| Max applied reaction: $R_{Ed, In}$ | -0.01 | -0.01 | -0.01 | -0.01 | -0.01 |
| Web crippling resistance: $R_0$ | -0.01 | -0.01 | -0.01 | -0.01 | -0.01 |
| Max applied moment: $M_{Edn}$ | -0 | -0 | -0 | -0 | -0 |
| Moment resistance: $M_0$ | 0 | 0 | 0 | 0 | 0 |
| $M_{Edn}$ / $M_0$ + $R_{Ed, In}$ / $R_0$ | -1 | -1 | -1 | -1 | -1 |

Unity factor: $\frac{M_{Edn}}{M_0} + \frac{R_{Ed,In}}{R_0} =$ -1 <= 1.00 Pass

## 5. Normal stage

### a. Loadings

- Uniformly distributed loads

| | Unfactored (kN/m²) | | | | |
|---|---|---|---|---|---|
| Span → | 1 | 2 | 3 | 4 | 5 |
| Self weight of composite slab | 2.28 | 2.28 | 2.28 | 2.28 | 2.28 |
| Additional permanent loads (kN/m²) | 2.5 | 2.5 | 2.5 | 2.5 | 2.5 |
| Live loads (kN/m²) | 3 | 3 | 3 | 3 | 3 |

### b. Sagging bending moment

- Surface and constant line load

| Span → | 1 | 2 | 3 | 4 | 5 |
|---|---|---|---|---|---|
| Applied moment (kNm/m) | 7.73 | 7.73 | 7.73 | 7.73 | 7.73 |
| Moment resistance (kNm/m) | 28.36 | 28.36 | 28.36 | 28.36 | 28.36 |

Unity factor: $\frac{M_{Edp}}{M_{Rdp}} =$ 0.27 <= 1.00 Pass

### c. Hogging bending moment

### d. Hogging bending moment at L/3 from internal

### e. Longitudinal shear

**Partial connexion method:**

- Surface and constant line load

| Span → | 1 | 2 | 3 | 4 | 5 |
|---|---|---|---|---|---|
| Applied moment (kNm/m) | 7.65 | 7.65 | 7.65 | 7.65 | 7.65 |
| Partial resistance moment | 25.22 | 25.22 | 25.22 | 25.22 | 25.22 |
| Position (m) | 1.07 | 1.07 | 1.07 | 1.07 | 1.07 |
| Max unity factor $M_{Ed}$ / $M_{Rd}$ | 0.3 | 0.3 | 0.3 | 0.3 | 0.3 |

Unity factor: $\frac{M_{Ed}}{M_{Rd}} =$ 0.3 <= 1.00 Pass

## f. Vertical shear

- Surface and constant line load

Max applied vertical shear

| | | | |
|---|---|---|---|
| End support : $V_{Ed,\,En}$ | 13.01 | kN/m | |
| Internal support : $V_{Ed,\,In}$ | 13.01 | kN/m | |

Vertical shear resistance:

| | | | |
|---|---|---|---|
| End support : $V_{Rd,\,En}$ | 33.35 | kN/m | |
| Internal support : $V_{Rd,\,In}$ | 33.35 | kN/m | |

| | | | | |
|---|---|---|---|---|
| Unity factor: | $\frac{V_{Ed,En}}{V_{Rd,En}} =$ | 0.39 | <= 1.00 | Pass |
| Unity factor: | $\frac{V_{Ed,In}}{V_{Rd,In}} =$ | 0.39 | <= 1.00 | Pass |

## h. Deflection checking

- Inertia´s moment of the cross-section:

| | | |
|---|---|---|
| Homogeneous section: | 972.63 | cm4/m |
| Cracked section: | 514.26 | cm4/m |
| Mean value: | 743.44 | cm4/m |

- Surface and constant line load

| Span → | 1 | 2 | 3 | 4 | 5 |
|---|---|---|---|---|---|
| Deflection under total loads (mm) | 1.22 | 0.59 | 0.8 | 0.59 | 1.22 |
| Allowable deflection (mm) | 7.92 | 7.92 | 7.92 | 7.92 | 7.92 |

| | | | | |
|---|---|---|---|---|
| Unity factor: | $\frac{f_{max}}{f_{allowed}} =$ | 0.15 | <= 1.00 | Pass |

**j. Vibration control**

| | | | |
|---|---|---|---|
| Coefficient mass related to live load | | 0.5 | |
| Minimum required frequency: $f_{min}$ | | 3 | Hz |
| Estimated first frequency of the floor | | 15.72 | Hz |
| Unity factor: $\frac{f_{min}}{f_0} =$ | 0.19 | <= 1.00 | Pass |

## 6. Fire resistance

Required fire resistance: **60**

### a. Loadings

- Uniformly distributed loads:

Factor $\Psi_{1,1} =$ 0.5

| Span → | 1 | 2 | 3 | 4 | 5 |
|---|---|---|---|---|---|
| Self weight of composite slab | 2.28 | 2.28 | 2.28 | 2.28 | 2.28 |
| Supplementary permanent loads | 2.5 | 2.5 | 2.5 | 2.5 | 2.5 |
| Live load | 3 | 3 | 3 | 3 | 3 |

### b. Thermal insulation checking

Min required slab depth: 55 mm

Unity factor: $\frac{h_{min}}{h_t + h_{screed}} =$ 0.44 <= 1.00 Pass

### c. Integrity criterion

For composite slabs the integrity criterion "E" is assumed to be satisfied (according to EN 1994-1-2).

### d. Fire resistance checking

**Moment resistance -** 0 kNm/m

| Span → | 1 | 2 | 3 | 4 | 5 |
|---|---|---|---|---|---|
| Span moment (kNm/m) | 4.43 | 4.43 | 4.43 | 4.43 | 4.43 |
| Span moment resistance | 10.74 | 10.74 | 10.74 | 10.74 | 10.74 |

Unity factor: $\frac{M_{Ed,fi}}{M_{Rd,fi}} =$ 0.41 <= 1.00 Pass

**Recommended complementary checking: 0.35 free span moment**

| Span → | 1 | 2 | 3 | 4 | 5 |
|---|---|---|---|---|---|
| 0.35 free span moment | 1.55 | 1.55 | 1.55 | 1.55 | 1.55 |

Unity factor: $\frac{0.35M_{Ed,fi}}{M_{Rdp,fi}} =$ 0.14 <= 1.00 Pass

The design overview report was created in SPANer calculation tool. Find out more
http://www.arcelormittal-construction.com.pl/spaner/logowanie.php

## 1. Profile sheet

| **Profile sheet** (Technical data for profiled sheets was obtained from the research.) |
|---|
| Hacierco 100/275; t = 0.75mm; fyb = 320 MPa; $\gamma_M$ = 1.00 |

## 2. Assumptions

| The extend of using the profile | | Limit of deflection | Support width | |
|---|---|---|---|---|
| SGN [%] | SGU [%] | | Internal support [mm] | End support [mm] |
| 100 | 100 | $a_{lim}$ = l/200 | - | 40 |

## 3. Load

**Permanent load ($\gamma_f$ = 1.35)**

| Span | $x_1$[m] | $x_2$[m] | $q_1$[kN/m$^2$] | $q_2$[kN/m$^2$] |
|---|---|---|---|---|
| 1 | 0.00 | 2.79 | 0.90 | 0.90 |

**Wind load ($\gamma_f$ = 1.50)**

| Span | $x_1$[m] | $x_2$[m] | $q_1$[kN/m$^2$] | $q_2$[kN/m$^2$] |
|---|---|---|---|---|
| 1 | 0.00 | 2.79 | 0.10 | 0.10 |

**Snow load ($\gamma_f$ = 1.50)**

| Span | $x_1$[m] | $x_2$[m] | $q_1$[kN/m$^2$] | $q_2$[kN/m$^2$] |
|---|---|---|---|---|
| 1 | 0.00 | 2.79 | 1.92 | 1.92 |

**Load coincidence coefficient:**

**ULS: 1.35 x 0.85 x Permanent + 1.50 x 0.60 x Wind + 1.50 x 1.00 x Snow**

**SLS: 1.00 x 1.00 x Permanent + 1.00 x 0.60 x Wind + 1.00 x 1.00 x Snow**

## 4. Geometric data

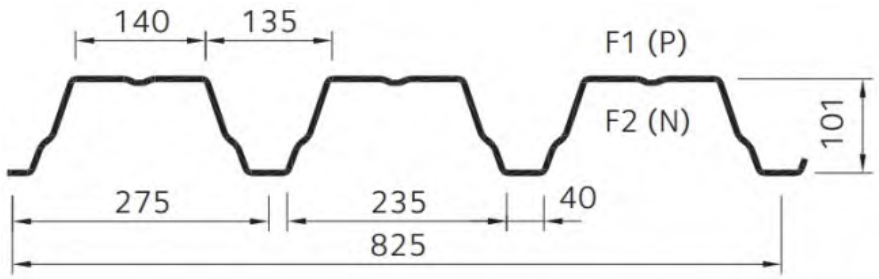


- Sectional moment of inertia $J_x$ = 155.10 cm$^4$/m; Modulus of elasticity E = 210.00 GPa;
- Profile weight m = 9.09 kg/m$^2$, automatically included; load factor $\gamma_f$ = 1.35

## 5. Static schema

| Span | L [m] | $V_{Ed}$ max [kN/m] | | $M_{Ed}$ max [kNm/m] | | | Deflection graph[mm] |
|---|---|---|---|---|---|---|---|
| | | x = 0 | x = L | Prop | Span | Prop | |
| 1 | 2.79 | 5.73 | 5.73 | 0.00 | 4.00 | 0.00 | 7.20 < $a_{lim}$ = 13.95 mm |

| Prop | A | B |
|---|---|---|
| $R_{Ed}$[kN/m] | 5.73 | 5.73 |

## Load schema

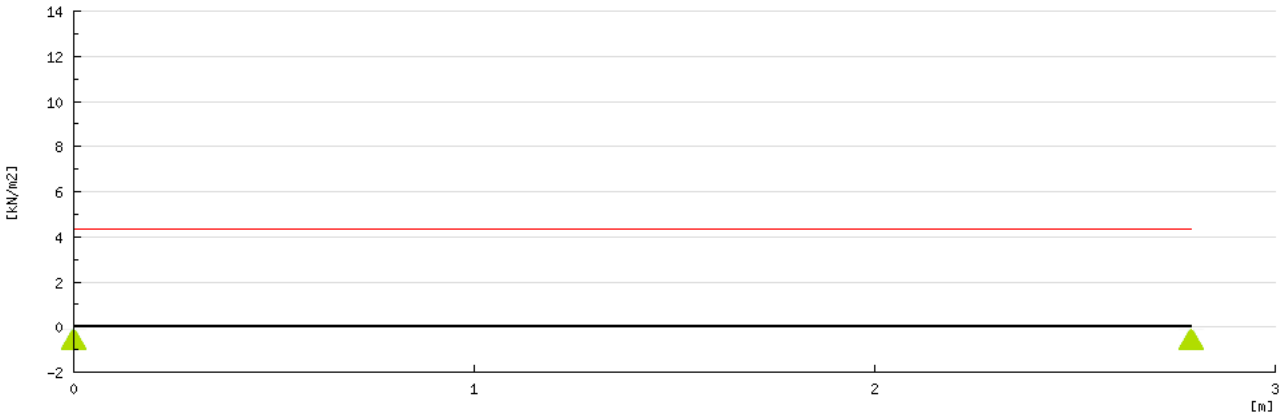

## Moments graph

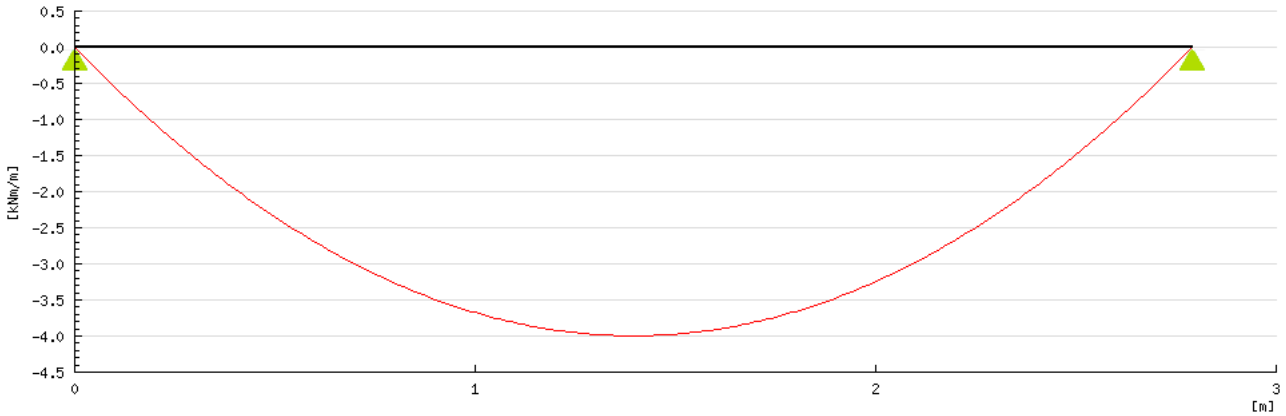


## Vertical shear

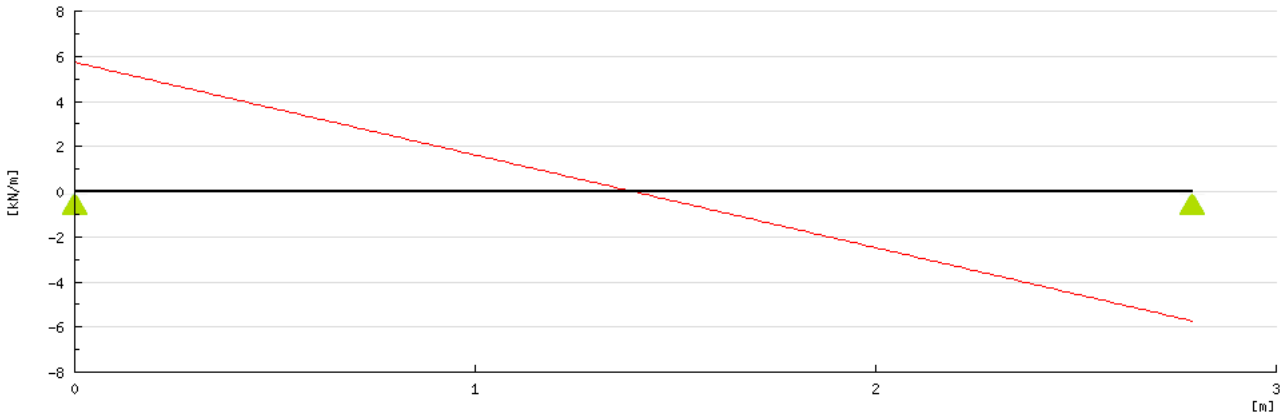


## Deflection graph

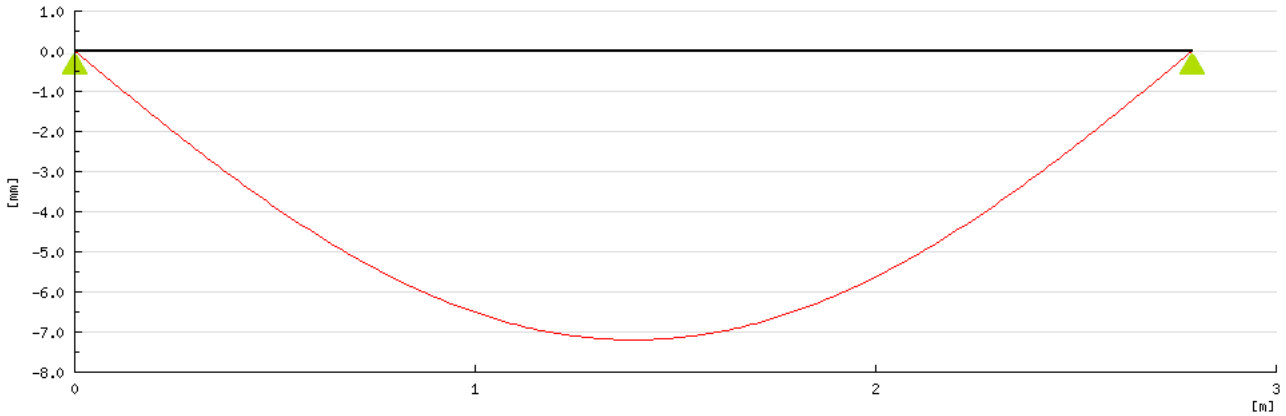

## 6. Design EN 1993-1-3 (Static load)

**ULS**

| **Moment resistance of the cross-section** |
|---|
| $M_{Ed}^{+}/M_{c,Rd}^{+}$ = 4.00/4.50 = 0.89 < 1.00 |
| **Vertical shear resistance of the cross-section** |
| $R_{Ed,e}/R_{w,Rd,e}$ = 5.73/8.16 = 0.70 < 1.00 |

**SLS**

| **Deflection** |
|---|
| $a/a_{lim}$ = 7.20/13.95 = 0.52 < 1.00 |

**Sheet designed properly**

Opracował: Igor Gorup

# TLORIS STREHE

In Z-direction

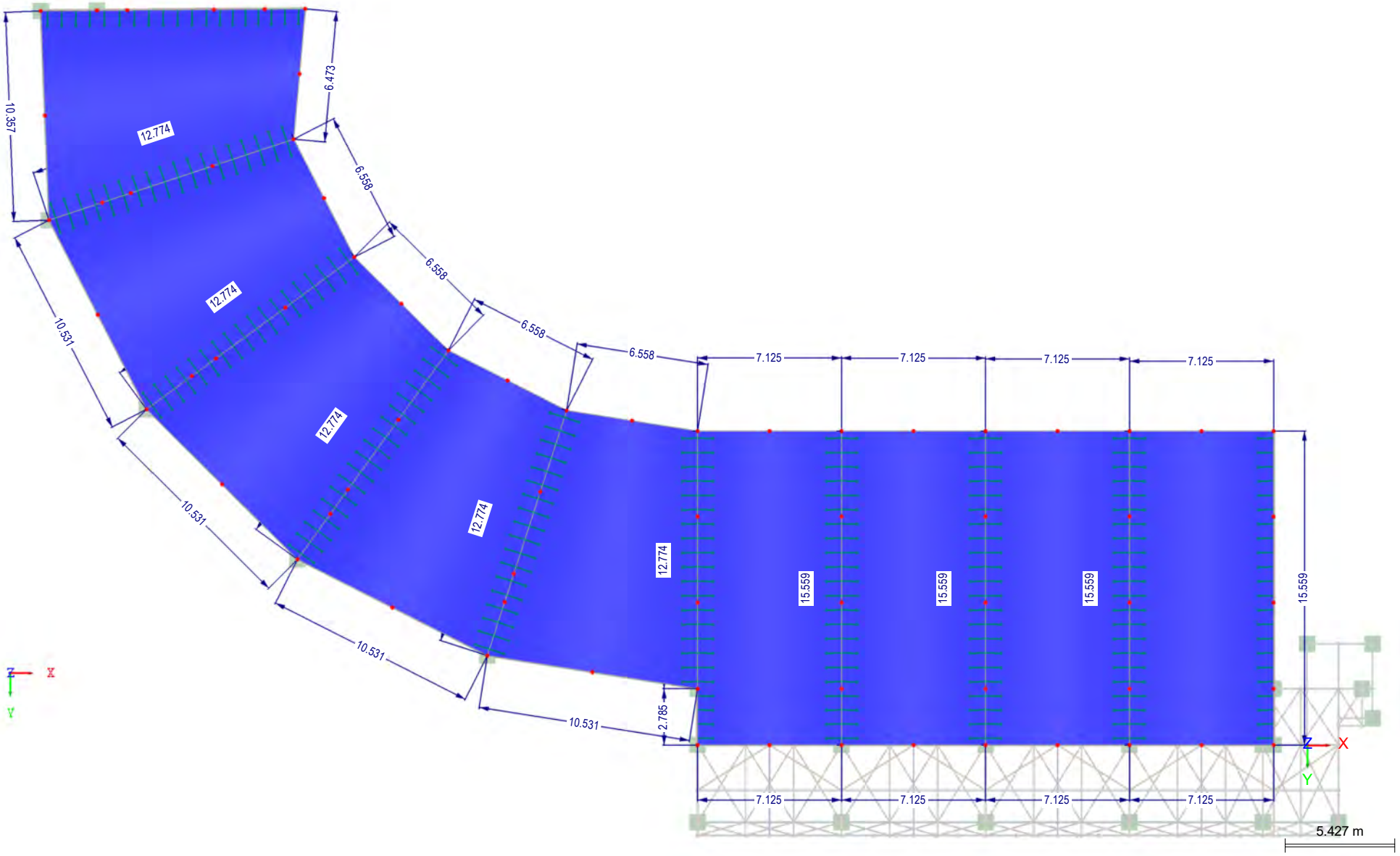

# MODEL 3D

Isometric

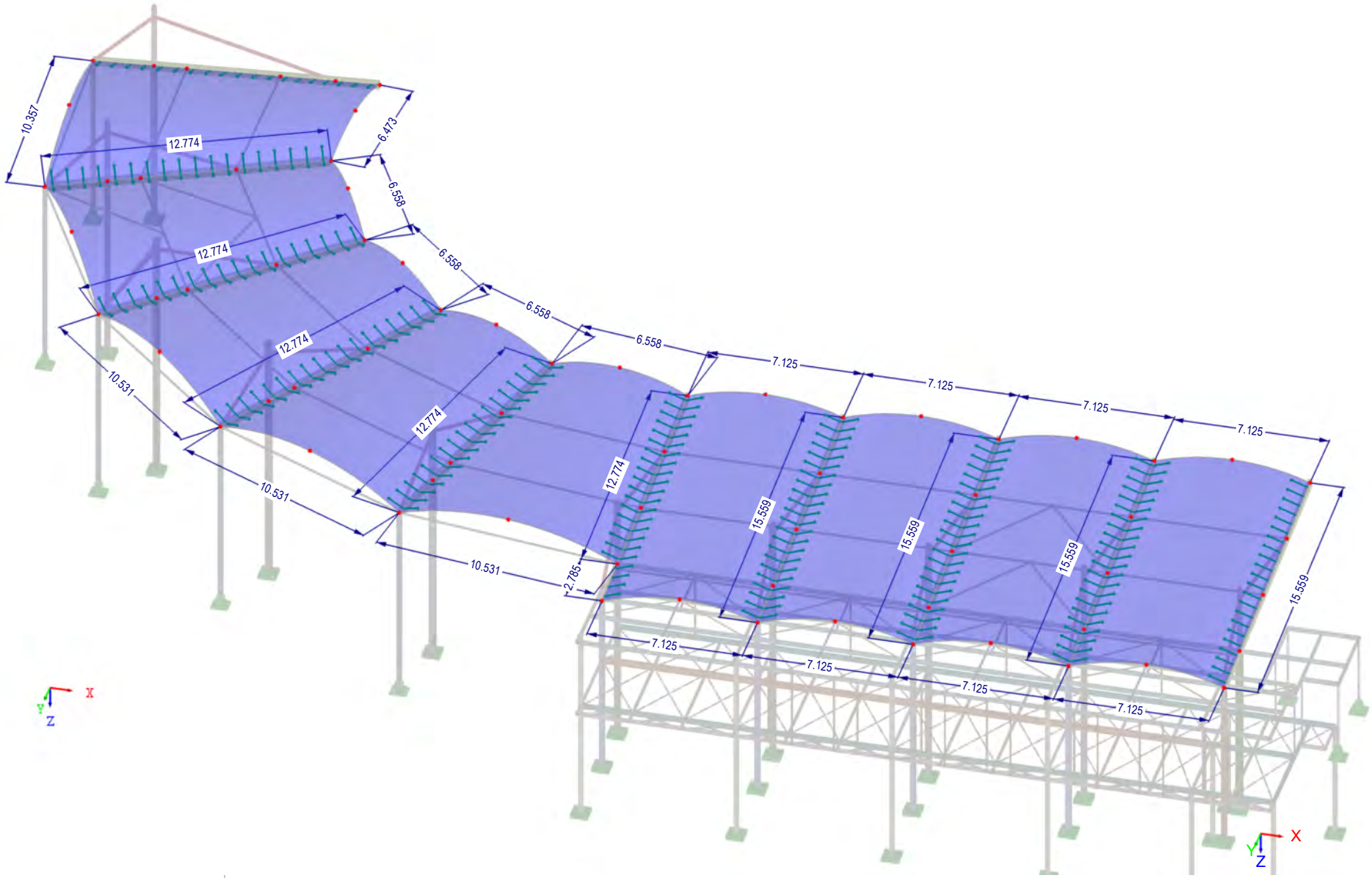

# LEGATO 107 T = 1,0 MM

In Z-direction

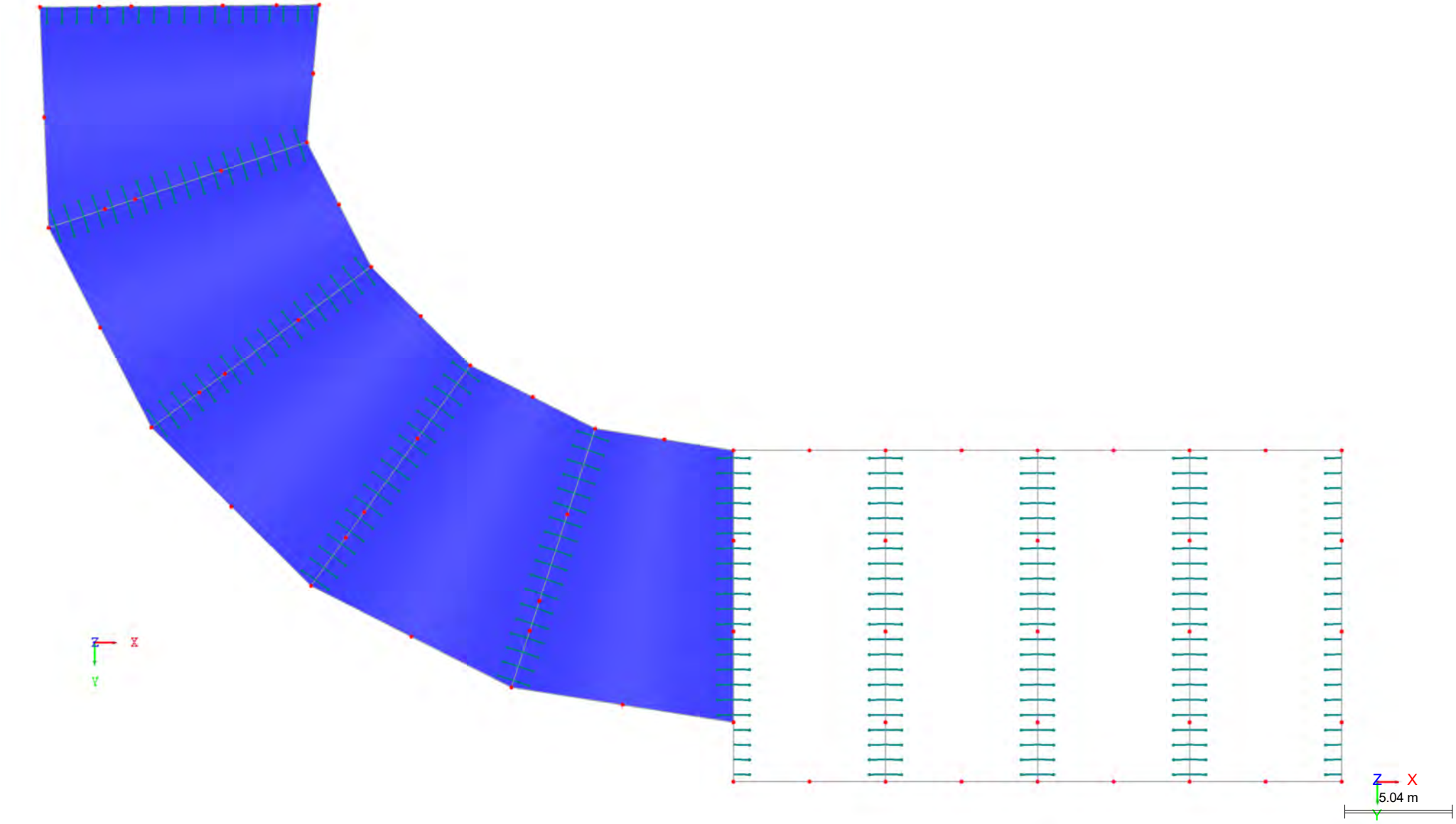

# LEGATO 107 T = 0,75 MM

In Z-direction

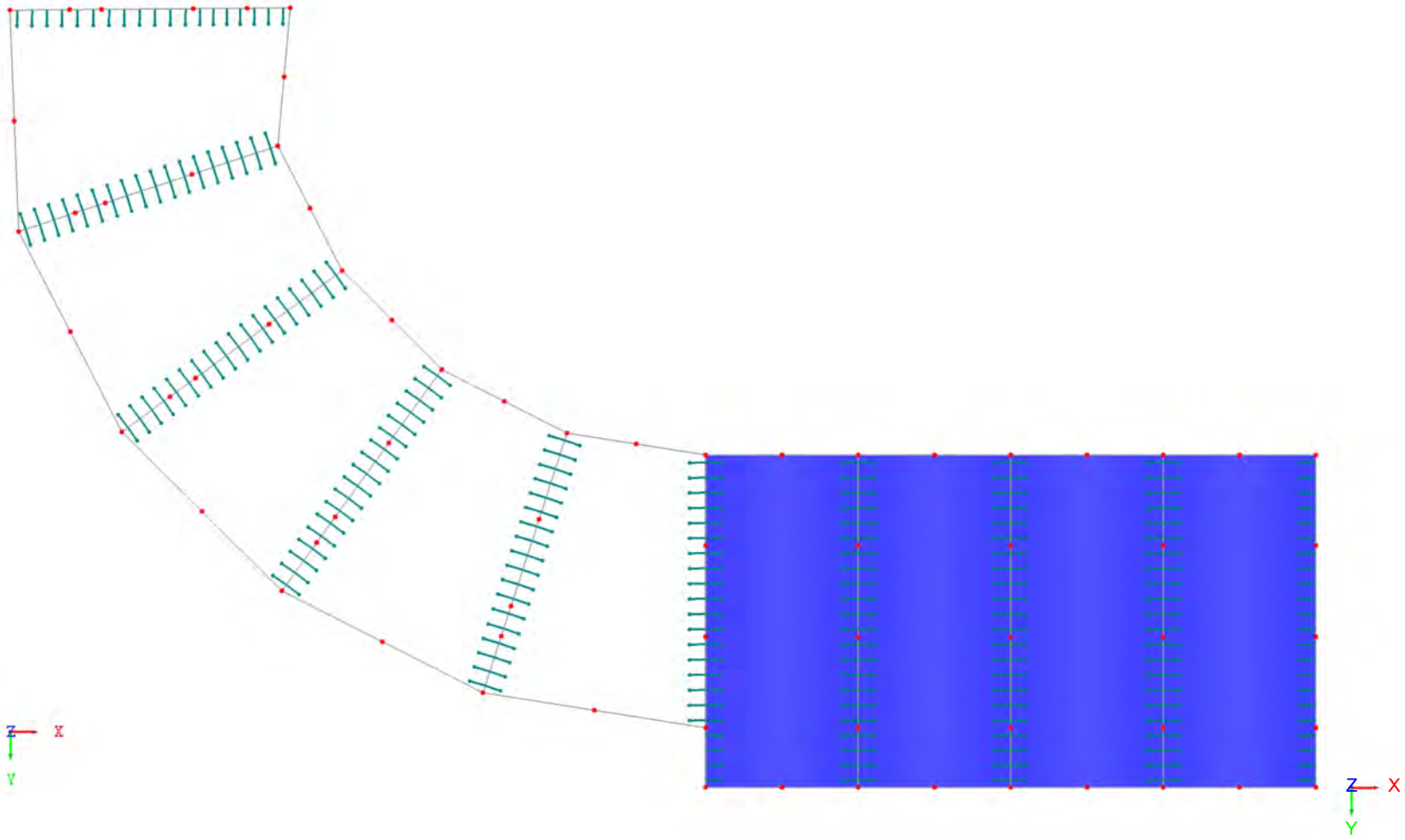


6.098 m

## 2.1 LOAD CASES

| Load Case | Load Case Description | EN 1990 \| SIST Action Category | Self-Weight - Factor in Direction Active | X | Y | Z |
|---|---|---|---|---|---|---|
| LC1 | stalna | Permanent | ☒ | 0.000 | 0.000 | 1.000 |
| LC2 | koristna etaža | Imposed - Category C: congregation areas | ☐ | | | |
| LC3 | sneg 1 | Snow (H ≤ 1000 m a.s.l.) | ☐ | | | |
| LC4 | sneg 2 | Snow (H ≤ 1000 m a.s.l.) | ☐ | | | |
| LC5 | veter + | Wind | ☐ | | | |
| LC6 | veter - | Wind | ☐ | | | |
| LC7 | izboène sile + | Imperfection | ☐ | | | |
| LC8 | izboène sile - | Imperfection | ☐ | | | |

## 2.2 ACTIONS

| Action | Action Description | EN 1990 \| SIST Action Category | Acting | Load Cases in Action | |
|---|---|---|---|---|---|
| A1 | Permanent | Permanent | | LC1 | stalna |
| A2 | Imposed | Imposed - Category C: congregation areas | | LC2 | koristna etaža |
| A3 | Snow | Snow (H ≤ 1000 m a.s.l.) | Alternative | LC3 | sneg 1 |
| | | | | LC4 | sneg 2 |
| A4 | Wind | Wind | Alternative | LC5 | veter + |
| | | | | LC6 | veter - |

## 2.3 COMBINATION EXPRESSIONS

| CE No. | Description | EN 1990 \| SIST Design Situation | Settings | | |
|---|---|---|---|---|---|
| CE1 | ULS | ULS (STR/GEO) - Permanent / transient - Eq. 6.10 | Consider | : | ☒ Favorable permanent actions<br>☒ Imperfection load cases |
| | | | Numbering of Generated Combinations | | First number of generated:<br>1 - Load combinations<br>1 - Result combinations |
| | | | Result combinations | | ☒ Generate additionally Either/Or result combination (result envelopes)<br>☒ Generate additionally a separate Either/Or result combination for each combination expression |
| | | | Generated Load Combinations | | |
| | | | Method of analysis | : | Second-order analysis (P-Delta) |
| CE2 | SLS | SLS - Characteristic | Consider | : | ☐ Favorable permanent actions<br>☒ Imperfection load cases |
| | | | Numbering of Generated Combinations | | First number of generated:<br>1 - Load combinations<br>1 - Result combinations |
| | | | Result combinations | | ☒ Generate additionally Either/Or result combination (result envelopes)<br>☒ Generate additionally a separate Either/Or result combination for each combination expression |
| | | | Generated Load Combinations | | |
| | | | Method of analysis | : | Second-order analysis (P-Delta) |
| CE3 | SLS | SLS - Frequent | Consider | : | ☐ Favorable permanent actions<br>☒ Imperfection load cases |
| | | | Numbering of Generated Combinations | | First number of generated:<br>1 - Load combinations<br>1 - Result combinations |
| | | | Result combinations | | ☒ Generate additionally Either/Or result combination (result envelopes)<br>☒ Generate additionally a separate Either/Or result combination for each combination expression |
| | | | Generated Load Combinations | | |
| | | | Method of analysis | : | Second-order analysis (P-Delta) |
| CE4 | SLS | SLS - Quasi-permanent | Consider | : | ☐ Favorable permanent actions<br>☒ Imperfection load cases |
| | | | Numbering of Generated Combinations | | First number of generated: |

## 2.3 COMBINATION EXPRESSIONS

| CE No. | Description | EN 1990 \| SIST Design Situation | Settings | | |
|---|---|---|---|---|---|
| | | | | | 1 - Load combinations |
| | | | Result combinations | | 1 - Result combinations<br>☒ Generate additionally Either/Or result combination (result envelopes)<br>☒ Generate additionally a separate Either/Or result combination for each combination expression |
| | | | Generated Load Combinations | | |
| | | | Method of analysis | : | Second-order analysis (P-Delta) |

## 2.3.5 IMPERFECTION LOAD CASES

| Load Case | Load Case Description | Alternate | Only with Load Cases | Never with Load Cases |
|---|---|---|---|---|
| LC7 | izboène sile + | ☒ | | |
| LC8 | izboène sile - | ☒ | | |

## 2.4 ACTION COMBINATIONS

| Action Combin. | Action Combination Description | EN 1990 \| SIST Design Situation | No. | Factor | Action | |
|---|---|---|---|---|---|---|
| AC1 | 1.35G | ULS (STR/GEO) - Permanent / transient - Eq. 6.10 | 1 | 1.35 | A1 | Permanent |
| AC2 | 1.35G + 1.50QiC | ULS (STR/GEO) - Permanent / transient - Eq. 6.10 | 1 | 1.35 | A1 | Permanent |
| | | | 2 | 1.50 | A2 | Imposed |
| AC3 | 1.35G + 1.50QiC + 0.75Qs | ULS (STR/GEO) - Permanent / transient - Eq. 6.10 | 1 | 1.35 | A1 | Permanent |
| | | | 2 | 1.50 | A2 | Imposed |
| | | | 3 | 0.75 | A3 | Snow |
| AC4 | 1.35G + 1.50QiC + 0.75Qs + 0.90Qw | ULS (STR/GEO) - Permanent / transient - Eq. 6.10 | 1 | 1.35 | A1 | Permanent |
| | | | 2 | 1.50 | A2 | Imposed |
| | | | 3 | 0.75 | A3 | Snow |
| | | | 4 | 0.90 | A4 | Wind |
| AC5 | 1.35G + 1.50QiC + 0.90Qw | ULS (STR/GEO) - Permanent / transient - Eq. 6.10 | 1 | 1.35 | A1 | Permanent |
| | | | 2 | 1.50 | A2 | Imposed |
| | | | 3 | 0.90 | A4 | Wind |
| AC6 | 1.35G + 1.50Qs | ULS (STR/GEO) - Permanent / transient - Eq. 6.10 | 1 | 1.35 | A1 | Permanent |
| | | | 2 | 1.50 | A3 | Snow |
| AC7 | 1.35G + 1.05QiC + 1.50Qs | ULS (STR/GEO) - Permanent / transient - Eq. 6.10 | 1 | 1.35 | A1 | Permanent |
| | | | 2 | 1.05 | A2 | Imposed |
| | | | 3 | 1.50 | A3 | Snow |
| AC8 | 1.35G + 1.05QiC + 1.50Qs + 0.90Qw | ULS (STR/GEO) - Permanent / transient - Eq. 6.10 | 1 | 1.35 | A1 | Permanent |
| | | | 2 | 1.05 | A2 | Imposed |
| | | | 3 | 1.50 | A3 | Snow |
| | | | 4 | 0.90 | A4 | Wind |
| AC9 | 1.35G + 1.50Qs + 0.90Qw | ULS (STR/GEO) - Permanent / transient - Eq. 6.10 | 1 | 1.35 | A1 | Permanent |
| | | | 2 | 1.50 | A3 | Snow |
| | | | 3 | 0.90 | A4 | Wind |
| AC10 | 1.35G + 1.50Qw | ULS (STR/GEO) - Permanent / transient - Eq. 6.10 | 1 | 1.35 | A1 | Permanent |
| | | | 2 | 1.50 | A4 | Wind |
| AC11 | 1.35G + 1.05QiC + 1.50Qw | ULS (STR/GEO) - Permanent / transient - Eq. 6.10 | 1 | 1.35 | A1 | Permanent |
| | | | 2 | 1.05 | A2 | Imposed |
| | | | 3 | 1.50 | A4 | Wind |
| AC12 | 1.35G + 1.05QiC + 0.75Qs + 1.50Qw | ULS (STR/GEO) - Permanent / transient - Eq. 6.10 | 1 | 1.35 | A1 | Permanent |
| | | | 2 | 1.05 | A2 | Imposed |
| | | | 3 | 0.75 | A3 | Snow |
| | | | 4 | 1.50 | A4 | Wind |
| AC13 | 1.35G + 0.75Qs + 1.50Qw | ULS (STR/GEO) - Permanent / transient - Eq. 6.10 | 1 | 1.35 | A1 | Permanent |
| | | | 2 | 0.75 | A3 | Snow |
| | | | 3 | 1.50 | A4 | Wind |

## 2.4 ACTION COMBINATIONS

| Action Combin. | Action Combination Description | EN 1990 \| SIST Design Situation | No. | Factor | Action | |
|---|---|---|---|---|---|---|
| AC14 | 1.00G | ULS (STR/GEO) - Permanent / transient - Eq. 6.10 | 1 | 1.00 | A1 | Permanent |
| AC15 | 1.00G + 1.50QiC | ULS (STR/GEO) - Permanent / transient - Eq. 6.10 | 1 | 1.00 | A1 | Permanent |
| | | | 2 | 1.50 | A2 | Imposed |
| AC16 | 1.00G + 1.50QiC + 0.75Qs | ULS (STR/GEO) - Permanent / transient - Eq. 6.10 | 1 | 1.00 | A1 | Permanent |
| | | | 2 | 1.50 | A2 | Imposed |
| | | | 3 | 0.75 | A3 | Snow |
| AC17 | 1.00G + 1.50QiC + 0.75Qs + 0.90Qw | ULS (STR/GEO) - Permanent / transient - Eq. 6.10 | 1 | 1.00 | A1 | Permanent |
| | | | 2 | 1.50 | A2 | Imposed |
| | | | 3 | 0.75 | A3 | Snow |
| | | | 4 | 0.90 | A4 | Wind |
| AC18 | 1.00G + 1.50QiC + 0.90Qw | ULS (STR/GEO) - Permanent / transient - Eq. 6.10 | 1 | 1.00 | A1 | Permanent |
| | | | 2 | 1.50 | A2 | Imposed |
| | | | 3 | 0.90 | A4 | Wind |
| AC19 | 1.00G + 1.50Qs | ULS (STR/GEO) - Permanent / transient - Eq. 6.10 | 1 | 1.00 | A1 | Permanent |
| | | | 2 | 1.50 | A3 | Snow |
| AC20 | 1.00G + 1.05QiC + 1.50Qs | ULS (STR/GEO) - Permanent / transient - Eq. 6.10 | 1 | 1.00 | A1 | Permanent |
| | | | 2 | 1.05 | A2 | Imposed |
| | | | 3 | 1.50 | A3 | Snow |
| AC21 | 1.00G + 1.05QiC + 1.50Qs + 0.90Qw | ULS (STR/GEO) - Permanent / transient - Eq. 6.10 | 1 | 1.00 | A1 | Permanent |
| | | | 2 | 1.05 | A2 | Imposed |
| | | | 3 | 1.50 | A3 | Snow |
| | | | 4 | 0.90 | A4 | Wind |
| AC22 | 1.00G + 1.50Qs + 0.90Qw | ULS (STR/GEO) - Permanent / transient - Eq. 6.10 | 1 | 1.00 | A1 | Permanent |
| | | | 2 | 1.50 | A3 | Snow |
| | | | 3 | 0.90 | A4 | Wind |
| AC23 | 1.00G + 1.50Qw | ULS (STR/GEO) - Permanent / transient - Eq. 6.10 | 1 | 1.00 | A1 | Permanent |
| | | | 2 | 1.50 | A4 | Wind |
| AC24 | 1.00G + 1.05QiC + 1.50Qw | ULS (STR/GEO) - Permanent / transient - Eq. 6.10 | 1 | 1.00 | A1 | Permanent |
| | | | 2 | 1.05 | A2 | Imposed |
| | | | 3 | 1.50 | A4 | Wind |
| AC25 | 1.00G + 1.05QiC + 0.75Qs + 1.50Qw | ULS (STR/GEO) - Permanent / transient - Eq. 6.10 | 1 | 1.00 | A1 | Permanent |
| | | | 2 | 1.05 | A2 | Imposed |
| | | | 3 | 0.75 | A3 | Snow |
| | | | 4 | 1.50 | A4 | Wind |
| AC26 | 1.00G + 0.75Qs + 1.50Qw | ULS (STR/GEO) - Permanent / transient - Eq. 6.10 | 1 | 1.00 | A1 | Permanent |
| | | | 2 | 0.75 | A3 | Snow |
| | | | 3 | 1.50 | A4 | Wind |
| AC27 | 1.00G | SLS - Characteristic | 1 | 1.00 | A1 | Permanent |
| AC28 | 1.00G + 1.00QiC | SLS - Characteristic | 1 | 1.00 | A1 | Permanent |
| | | | 2 | 1.00 | A2 | Imposed |
| AC29 | 1.00G + 1.00QiC + 0.50Qs | SLS - Characteristic | 1 | 1.00 | A1 | Permanent |
| | | | 2 | 1.00 | A2 | Imposed |
| | | | 3 | 0.50 | A3 | Snow |
| AC30 | 1.00G + 1.00QiC + 0.50Qs + 0.60Qw | SLS - Characteristic | 1 | 1.00 | A1 | Permanent |
| | | | 2 | 1.00 | A2 | Imposed |
| | | | 3 | 0.50 | A3 | Snow |
| | | | 4 | 0.60 | A4 | Wind |
| AC31 | 1.00G + 1.00QiC + 0.60Qw | SLS - Characteristic | 1 | 1.00 | A1 | Permanent |
| | | | 2 | 1.00 | A2 | Imposed |
| | | | 3 | 0.60 | A4 | Wind |
| AC32 | 1.00G + 1.00Qs | SLS - Characteristic | 1 | 1.00 | A1 | Permanent |
| | | | 2 | 1.00 | A3 | Snow |
| AC33 | 1.00G + 0.70QiC + 1.00Qs | SLS - Characteristic | 1 | 1.00 | A1 | Permanent |
| | | | 2 | 0.70 | A2 | Imposed |
| | | | 3 | 1.00 | A3 | Snow |
| AC34 | 1.00G + 0.70QiC + 1.00Qs + 0.60Qw | SLS - Characteristic | 1 | 1.00 | A1 | Permanent |
| | | | 2 | 0.70 | A2 | Imposed |
| | | | 3 | 1.00 | A3 | Snow |
| | | | 4 | 0.60 | A4 | Wind |

## 2.4 ACTION COMBINATIONS

| Action Combin. | Action Combination Description | EN 1990 \| SIST Design Situation | No. | Factor | Action | |
|---|---|---|---|---|---|---|
| AC35 | 1.00G + 1.00Qs + 0.60Qw | SLS - Characteristic | 1 | 1.00 | A1 | Permanent |
| | | | 2 | 1.00 | A3 | Snow |
| | | | 3 | 0.60 | A4 | Wind |
| AC36 | 1.00G + 1.00Qw | SLS - Characteristic | 1 | 1.00 | A1 | Permanent |
| | | | 2 | 1.00 | A4 | Wind |
| AC37 | 1.00G + 0.70QiC + 1.00Qw | SLS - Characteristic | 1 | 1.00 | A1 | Permanent |
| | | | 2 | 0.70 | A2 | Imposed |
| | | | 3 | 1.00 | A4 | Wind |
| AC38 | 1.00G + 0.70QiC + 0.50Qs + 1.00Qw | SLS - Characteristic | 1 | 1.00 | A1 | Permanent |
| | | | 2 | 0.70 | A2 | Imposed |
| | | | 3 | 0.50 | A3 | Snow |
| | | | 4 | 1.00 | A4 | Wind |
| AC39 | 1.00G + 0.50Qs + 1.00Qw | SLS - Characteristic | 1 | 1.00 | A1 | Permanent |
| | | | 2 | 0.50 | A3 | Snow |
| | | | 3 | 1.00 | A4 | Wind |

## 2.5 LOAD COMBINATIONS

| Load Combin. | DS | Load Combination Description | No. | Factor | Load Case | |
|---|---|---|---|---|---|---|
| CO1 | STR | 1.35*LC1 + 1.5*LC2 + 0.75*LC3 + 0.9*LC5 + LC7 | 1 | 1.35 | LC1 | stalna |
| | | | 2 | 1.50 | LC2 | koristna etaža |
| | | | 3 | 0.75 | LC3 | sneg 1 |
| | | | 4 | 0.90 | LC5 | veter + |
| | | | 5 | 1.00 | LC7 | izboène sile + |
| CO2 | STR | 1.35*LC1 + 1.5*LC2 + 0.75*LC3 + 0.9*LC5 + LC8 | 1 | 1.35 | LC1 | stalna |
| | | | 2 | 1.50 | LC2 | koristna etaža |
| | | | 3 | 0.75 | LC3 | sneg 1 |
| | | | 4 | 0.90 | LC5 | veter + |
| | | | 5 | 1.00 | LC8 | izboène sile - |
| CO3 | STR | 1.35*LC1 + 1.5*LC2 + 0.75*LC3 + 0.9*LC6 + LC7 | 1 | 1.35 | LC1 | stalna |
| | | | 2 | 1.50 | LC2 | koristna etaža |
| | | | 3 | 0.75 | LC3 | sneg 1 |
| | | | 4 | 0.90 | LC6 | veter - |
| | | | 5 | 1.00 | LC7 | izboène sile + |
| CO4 | STR | 1.35*LC1 + 1.5*LC2 + 0.75*LC3 + 0.9*LC6 + LC8 | 1 | 1.35 | LC1 | stalna |
| | | | 2 | 1.50 | LC2 | koristna etaža |
| | | | 3 | 0.75 | LC3 | sneg 1 |
| | | | 4 | 0.90 | LC6 | veter - |
| | | | 5 | 1.00 | LC8 | izboène sile - |
| CO5 | STR | 1.35*LC1 + 1.5*LC2 + 0.75*LC4 + 0.9*LC5 + LC7 | 1 | 1.35 | LC1 | stalna |
| | | | 2 | 1.50 | LC2 | koristna etaža |
| | | | 3 | 0.75 | LC4 | sneg 2 |
| | | | 4 | 0.90 | LC5 | veter + |
| | | | 5 | 1.00 | LC7 | izboène sile + |
| CO6 | STR | 1.35*LC1 + 1.5*LC2 + 0.75*LC4 + 0.9*LC5 + LC8 | 1 | 1.35 | LC1 | stalna |
| | | | 2 | 1.50 | LC2 | koristna etaža |
| | | | 3 | 0.75 | LC4 | sneg 2 |
| | | | 4 | 0.90 | LC5 | veter + |
| | | | 5 | 1.00 | LC8 | izboène sile - |
| CO7 | STR | 1.35*LC1 + 1.5*LC2 + 0.75*LC4 + 0.9*LC6 + LC7 | 1 | 1.35 | LC1 | stalna |
| | | | 2 | 1.50 | LC2 | koristna etaža |
| | | | 3 | 0.75 | LC4 | sneg 2 |
| | | | 4 | 0.90 | LC6 | veter - |
| | | | 5 | 1.00 | LC7 | izboène sile + |
| CO8 | STR | 1.35*LC1 + 1.5*LC2 + 0.75*LC4 + 0.9*LC6 + LC8 | 1 | 1.35 | LC1 | stalna |
| | | | 2 | 1.50 | LC2 | koristna etaža |
| | | | 3 | 0.75 | LC4 | sneg 2 |
| | | | 4 | 0.90 | LC6 | veter - |
| | | | 5 | 1.00 | LC8 | izboène sile - |
| CO9 | STR | 1.35*LC1 + 1.05*LC2 + 1.5*LC3 + 0.9*LC5 + LC7 | 1 | 1.35 | LC1 | stalna |

## 2.5 LOAD COMBINATIONS

| Load Combin. | Load Combination DS | Description | No. | Factor | Load Case | |
|---|---|---|---|---|---|---|
| | | | 2 | 1.05 | LC2 | koristna etaža |
| | | | 3 | 1.50 | LC3 | sneg 1 |
| | | | 4 | 0.90 | LC5 | veter + |
| | | | 5 | 1.00 | LC7 | izboène sile + |
| CO10 | STR | 1.35*LC1 + 1.05*LC2 + 1.5*LC3 + 0.9*LC5 + LC8 | 1 | 1.35 | LC1 | stalna |
| | | | 2 | 1.05 | LC2 | koristna etaža |
| | | | 3 | 1.50 | LC3 | sneg 1 |
| | | | 4 | 0.90 | LC5 | veter + |
| | | | 5 | 1.00 | LC8 | izboène sile - |
| CO11 | STR | 1.35*LC1 + 1.05*LC2 + 1.5*LC3 + 0.9*LC6 + LC7 | 1 | 1.35 | LC1 | stalna |
| | | | 2 | 1.05 | LC2 | koristna etaža |
| | | | 3 | 1.50 | LC3 | sneg 1 |
| | | | 4 | 0.90 | LC6 | veter - |
| | | | 5 | 1.00 | LC7 | izboène sile + |
| CO12 | STR | 1.35*LC1 + 1.05*LC2 + 1.5*LC3 + 0.9*LC6 + LC8 | 1 | 1.35 | LC1 | stalna |
| | | | 2 | 1.05 | LC2 | koristna etaža |
| | | | 3 | 1.50 | LC3 | sneg 1 |
| | | | 4 | 0.90 | LC6 | veter - |
| | | | 5 | 1.00 | LC8 | izboène sile - |
| CO13 | STR | 1.35*LC1 + 1.05*LC2 + 1.5*LC4 + 0.9*LC5 + LC7 | 1 | 1.35 | LC1 | stalna |
| | | | 2 | 1.05 | LC2 | koristna etaža |
| | | | 3 | 1.50 | LC4 | sneg 2 |
| | | | 4 | 0.90 | LC5 | veter + |
| | | | 5 | 1.00 | LC7 | izboène sile + |
| CO14 | STR | 1.35*LC1 + 1.05*LC2 + 1.5*LC4 + 0.9*LC5 + LC8 | 1 | 1.35 | LC1 | stalna |
| | | | 2 | 1.05 | LC2 | koristna etaža |
| | | | 3 | 1.50 | LC4 | sneg 2 |
| | | | 4 | 0.90 | LC5 | veter + |
| | | | 5 | 1.00 | LC8 | izboène sile - |
| CO15 | STR | 1.35*LC1 + 1.05*LC2 + 1.5*LC4 + 0.9*LC6 + LC7 | 1 | 1.35 | LC1 | stalna |
| | | | 2 | 1.05 | LC2 | koristna etaža |
| | | | 3 | 1.50 | LC4 | sneg 2 |
| | | | 4 | 0.90 | LC6 | veter - |
| | | | 5 | 1.00 | LC7 | izboène sile + |
| CO16 | STR | 1.35*LC1 + 1.05*LC2 + 1.5*LC4 + 0.9*LC6 + LC8 | 1 | 1.35 | LC1 | stalna |
| | | | 2 | 1.05 | LC2 | koristna etaža |
| | | | 3 | 1.50 | LC4 | sneg 2 |
| | | | 4 | 0.90 | LC6 | veter - |
| | | | 5 | 1.00 | LC8 | izboène sile - |
| CO17 | STR | 1.35*LC1 + 1.05*LC2 + 0.75*LC3 + 1.5*LC5 + LC7 | 1 | 1.35 | LC1 | stalna |
| | | | 2 | 1.05 | LC2 | koristna etaža |
| | | | 3 | 0.75 | LC3 | sneg 1 |
| | | | 4 | 1.50 | LC5 | veter + |
| | | | 5 | 1.00 | LC7 | izboène sile + |
| CO18 | STR | 1.35*LC1 + 1.05*LC2 + 0.75*LC3 + 1.5*LC5 + LC8 | 1 | 1.35 | LC1 | stalna |
| | | | 2 | 1.05 | LC2 | koristna etaža |
| | | | 3 | 0.75 | LC3 | sneg 1 |
| | | | 4 | 1.50 | LC5 | veter + |
| | | | 5 | 1.00 | LC8 | izboène sile - |
| CO19 | STR | 1.35*LC1 + 1.05*LC2 + 0.75*LC3 + 1.5*LC6 + LC7 | 1 | 1.35 | LC1 | stalna |
| | | | 2 | 1.05 | LC2 | koristna etaža |
| | | | 3 | 0.75 | LC3 | sneg 1 |
| | | | 4 | 1.50 | LC6 | veter - |
| | | | 5 | 1.00 | LC7 | izboène sile + |
| CO20 | STR | 1.35*LC1 + 1.05*LC2 + 0.75*LC3 + 1.5*LC6 + LC8 | 1 | 1.35 | LC1 | stalna |
| | | | 2 | 1.05 | LC2 | koristna etaža |
| | | | 3 | 0.75 | LC3 | sneg 1 |
| | | | 4 | 1.50 | LC6 | veter - |
| | | | 5 | 1.00 | LC8 | izboène sile - |
| CO21 | STR | 1.35*LC1 + 1.05*LC2 + 0.75*LC4 + 1.5*LC5 + LC7 | 1 | 1.35 | LC1 | stalna |
| | | | 2 | 1.05 | LC2 | koristna etaža |
| | | | 3 | 0.75 | LC4 | sneg 2 |
| | | | 4 | 1.50 | LC5 | veter + |
| | | | 5 | 1.00 | LC7 | izboène sile + |

## 2.5 LOAD COMBINATIONS

| Load Combin. | DS | Load Combination Description | No. | Factor | Load Case | |
|---|---|---|---|---|---|---|
| CO22 | STR | 1.35*LC1 + 1.05*LC2 + 0.75*LC4 + 1.5*LC5 + LC8 | 1 | 1.35 | LC1 | stalna |
| | | | 2 | 1.05 | LC2 | koristna etaža |
| | | | 3 | 0.75 | LC4 | sneg 2 |
| | | | 4 | 1.50 | LC5 | veter + |
| | | | 5 | 1.00 | LC8 | izboène sile - |
| CO23 | STR | 1.35*LC1 + 1.05*LC2 + 0.75*LC4 + 1.5*LC6 + LC7 | 1 | 1.35 | LC1 | stalna |
| | | | 2 | 1.05 | LC2 | koristna etaža |
| | | | 3 | 0.75 | LC4 | sneg 2 |
| | | | 4 | 1.50 | LC6 | veter - |
| | | | 5 | 1.00 | LC7 | izboène sile + |
| CO24 | STR | 1.35*LC1 + 1.05*LC2 + 0.75*LC4 + 1.5*LC6 + LC8 | 1 | 1.35 | LC1 | stalna |
| | | | 2 | 1.05 | LC2 | koristna etaža |
| | | | 3 | 0.75 | LC4 | sneg 2 |
| | | | 4 | 1.50 | LC6 | veter - |
| | | | 5 | 1.00 | LC8 | izboène sile - |
| CO25 | STR | LC1 + 1.5*LC5 + LC7 | 1 | 1.00 | LC1 | stalna |
| | | | 2 | 1.50 | LC5 | veter + |
| | | | 3 | 1.00 | LC7 | izboène sile + |
| CO26 | STR | LC1 + 1.5*LC5 + LC8 | 1 | 1.00 | LC1 | stalna |
| | | | 2 | 1.50 | LC5 | veter + |
| | | | 3 | 1.00 | LC8 | izboène sile - |
| CO27 | STR | LC1 + 1.5*LC6 + LC7 | 1 | 1.00 | LC1 | stalna |
| | | | 2 | 1.50 | LC6 | veter - |
| | | | 3 | 1.00 | LC7 | izboène sile + |
| CO28 | STR | LC1 + 1.5*LC6 + LC8 | 1 | 1.00 | LC1 | stalna |
| | | | 2 | 1.50 | LC6 | veter - |
| | | | 3 | 1.00 | LC8 | izboène sile - |
| CO29 | S Ch | LC1 + LC2 + 0.5*LC3 + 0.6*LC5 + LC7 | 1 | 1.00 | LC1 | stalna |
| | | | 2 | 1.00 | LC2 | koristna etaža |
| | | | 3 | 0.50 | LC3 | sneg 1 |
| | | | 4 | 0.60 | LC5 | veter + |
| | | | 5 | 1.00 | LC7 | izboène sile + |
| CO30 | S Ch | LC1 + LC2 + 0.5*LC3 + 0.6*LC5 + LC8 | 1 | 1.00 | LC1 | stalna |
| | | | 2 | 1.00 | LC2 | koristna etaža |
| | | | 3 | 0.50 | LC3 | sneg 1 |
| | | | 4 | 0.60 | LC5 | veter + |
| | | | 5 | 1.00 | LC8 | izboène sile - |
| CO31 | S Ch | LC1 + LC2 + 0.5*LC3 + 0.6*LC6 + LC7 | 1 | 1.00 | LC1 | stalna |
| | | | 2 | 1.00 | LC2 | koristna etaža |
| | | | 3 | 0.50 | LC3 | sneg 1 |
| | | | 4 | 0.60 | LC6 | veter - |
| | | | 5 | 1.00 | LC7 | izboène sile + |
| CO32 | S Ch | LC1 + LC2 + 0.5*LC3 + 0.6*LC6 + LC8 | 1 | 1.00 | LC1 | stalna |
| | | | 2 | 1.00 | LC2 | koristna etaža |
| | | | 3 | 0.50 | LC3 | sneg 1 |
| | | | 4 | 0.60 | LC6 | veter - |
| | | | 5 | 1.00 | LC8 | izboène sile - |
| CO33 | S Ch | LC1 + LC2 + 0.5*LC4 + 0.6*LC5 + LC7 | 1 | 1.00 | LC1 | stalna |
| | | | 2 | 1.00 | LC2 | koristna etaža |
| | | | 3 | 0.50 | LC4 | sneg 2 |
| | | | 4 | 0.60 | LC5 | veter + |
| | | | 5 | 1.00 | LC7 | izboène sile + |
| CO34 | S Ch | LC1 + LC2 + 0.5*LC4 + 0.6*LC5 + LC8 | 1 | 1.00 | LC1 | stalna |
| | | | 2 | 1.00 | LC2 | koristna etaža |
| | | | 3 | 0.50 | LC4 | sneg 2 |
| | | | 4 | 0.60 | LC5 | veter + |
| | | | 5 | 1.00 | LC8 | izboène sile - |
| CO35 | S Ch | LC1 + LC2 + 0.5*LC4 + 0.6*LC6 + LC7 | 1 | 1.00 | LC1 | stalna |
| | | | 2 | 1.00 | LC2 | koristna etaža |
| | | | 3 | 0.50 | LC4 | sneg 2 |
| | | | 4 | 0.60 | LC6 | veter - |
| | | | 5 | 1.00 | LC7 | izboène sile + |
| CO36 | S Ch | LC1 + LC2 + 0.5*LC4 + 0.6*LC6 + LC8 | 1 | 1.00 | LC1 | stalna |
| | | | 2 | 1.00 | LC2 | koristna etaža |

## 2.5 LOAD COMBINATIONS

| Load Combin. | DS | Description | No. | Factor | Load Case | |
|---|---|---|---|---|---|---|
| | | | 3 | 0.50 | LC4 | sneg 2 |
| | | | 4 | 0.60 | LC6 | veter - |
| | | | 5 | 1.00 | LC8 | izboène sile - |
| CO37 | S Ch | LC1 + 0.7*LC2 + LC3 + 0.6*LC5 + LC7 | 1 | 1.00 | LC1 | stalna |
| | | | 2 | 0.70 | LC2 | koristna etaža |
| | | | 3 | 1.00 | LC3 | sneg 1 |
| | | | 4 | 0.60 | LC5 | veter + |
| | | | 5 | 1.00 | LC7 | izboène sile + |
| CO38 | S Ch | LC1 + 0.7*LC2 + LC3 + 0.6*LC5 + LC8 | 1 | 1.00 | LC1 | stalna |
| | | | 2 | 0.70 | LC2 | koristna etaža |
| | | | 3 | 1.00 | LC3 | sneg 1 |
| | | | 4 | 0.60 | LC5 | veter + |
| | | | 5 | 1.00 | LC8 | izboène sile - |
| CO39 | S Ch | LC1 + 0.7*LC2 + LC3 + 0.6*LC6 + LC7 | 1 | 1.00 | LC1 | stalna |
| | | | 2 | 0.70 | LC2 | koristna etaža |
| | | | 3 | 1.00 | LC3 | sneg 1 |
| | | | 4 | 0.60 | LC6 | veter - |
| | | | 5 | 1.00 | LC7 | izboène sile + |
| CO40 | S Ch | LC1 + 0.7*LC2 + LC3 + 0.6*LC6 + LC8 | 1 | 1.00 | LC1 | stalna |
| | | | 2 | 0.70 | LC2 | koristna etaža |
| | | | 3 | 1.00 | LC3 | sneg 1 |
| | | | 4 | 0.60 | LC6 | veter - |
| | | | 5 | 1.00 | LC8 | izboène sile - |
| CO41 | S Ch | LC1 + 0.7*LC2 + LC4 + 0.6*LC5 + LC7 | 1 | 1.00 | LC1 | stalna |
| | | | 2 | 0.70 | LC2 | koristna etaža |
| | | | 3 | 1.00 | LC4 | sneg 2 |
| | | | 4 | 0.60 | LC5 | veter + |
| | | | 5 | 1.00 | LC7 | izboène sile + |
| CO42 | S Ch | LC1 + 0.7*LC2 + LC4 + 0.6*LC5 + LC8 | 1 | 1.00 | LC1 | stalna |
| | | | 2 | 0.70 | LC2 | koristna etaža |
| | | | 3 | 1.00 | LC4 | sneg 2 |
| | | | 4 | 0.60 | LC5 | veter + |
| | | | 5 | 1.00 | LC8 | izboène sile - |
| CO43 | S Ch | LC1 + 0.7*LC2 + LC4 + 0.6*LC6 + LC7 | 1 | 1.00 | LC1 | stalna |
| | | | 2 | 0.70 | LC2 | koristna etaža |
| | | | 3 | 1.00 | LC4 | sneg 2 |
| | | | 4 | 0.60 | LC6 | veter - |
| | | | 5 | 1.00 | LC7 | izboène sile + |
| CO44 | S Ch | LC1 + 0.7*LC2 + LC4 + 0.6*LC6 + LC8 | 1 | 1.00 | LC1 | stalna |
| | | | 2 | 0.70 | LC2 | koristna etaža |
| | | | 3 | 1.00 | LC4 | sneg 2 |
| | | | 4 | 0.60 | LC6 | veter - |
| | | | 5 | 1.00 | LC8 | izboène sile - |
| CO45 | S Ch | LC1 + LC5 + LC7 | 1 | 1.00 | LC1 | stalna |
| | | | 2 | 1.00 | LC5 | veter + |
| | | | 3 | 1.00 | LC7 | izboène sile + |
| CO46 | S Ch | LC1 + LC5 + LC8 | 1 | 1.00 | LC1 | stalna |
| | | | 2 | 1.00 | LC5 | veter + |
| | | | 3 | 1.00 | LC8 | izboène sile - |
| CO47 | S Ch | LC1 + LC6 + LC7 | 1 | 1.00 | LC1 | stalna |
| | | | 2 | 1.00 | LC6 | veter - |
| | | | 3 | 1.00 | LC7 | izboène sile + |
| CO48 | S Ch | LC1 + LC6 + LC8 | 1 | 1.00 | LC1 | stalna |
| | | | 2 | 1.00 | LC6 | veter - |
| | | | 3 | 1.00 | LC8 | izboène sile - |
| CO49 | S Ch | LC1 + 0.7*LC2 + 0.5*LC3 + LC5 + LC7 | 1 | 1.00 | LC1 | stalna |
| | | | 2 | 0.70 | LC2 | koristna etaža |
| | | | 3 | 0.50 | LC3 | sneg 1 |
| | | | 4 | 1.00 | LC5 | veter + |
| | | | 5 | 1.00 | LC7 | izboène sile + |
| CO50 | S Ch | LC1 + 0.7*LC2 + 0.5*LC3 + LC5 + LC8 | 1 | 1.00 | LC1 | stalna |
| | | | 2 | 0.70 | LC2 | koristna etaža |
| | | | 3 | 0.50 | LC3 | sneg 1 |
| | | | 4 | 1.00 | LC5 | veter + |

## 2.5 LOAD COMBINATIONS

| Load Combin. | Load Combination DS | Description | No. | Factor | Load Case | |
|---|---|---|---|---|---|---|
| | | | 5 | 1.00 | LC8 | izboène sile - |
| CO51 | S Ch | LC1 + 0.7*LC2 + 0.5*LC3 + LC6 + LC7 | 1 | 1.00 | LC1 | stalna |
| | | | 2 | 0.70 | LC2 | koristna etaža |
| | | | 3 | 0.50 | LC3 | sneg 1 |
| | | | 4 | 1.00 | LC6 | veter - |
| | | | 5 | 1.00 | LC7 | izboène sile + |
| CO52 | S Ch | LC1 + 0.7*LC2 + 0.5*LC3 + LC6 + LC8 | 1 | 1.00 | LC1 | stalna |
| | | | 2 | 0.70 | LC2 | koristna etaža |
| | | | 3 | 0.50 | LC3 | sneg 1 |
| | | | 4 | 1.00 | LC6 | veter - |
| | | | 5 | 1.00 | LC8 | izboène sile - |
| CO53 | S Ch | LC1 + 0.7*LC2 + 0.5*LC4 + LC5 + LC7 | 1 | 1.00 | LC1 | stalna |
| | | | 2 | 0.70 | LC2 | koristna etaža |
| | | | 3 | 0.50 | LC4 | sneg 2 |
| | | | 4 | 1.00 | LC5 | veter + |
| | | | 5 | 1.00 | LC7 | izboène sile + |
| CO54 | S Ch | LC1 + 0.7*LC2 + 0.5*LC4 + LC5 + LC8 | 1 | 1.00 | LC1 | stalna |
| | | | 2 | 0.70 | LC2 | koristna etaža |
| | | | 3 | 0.50 | LC4 | sneg 2 |
| | | | 4 | 1.00 | LC5 | veter + |
| | | | 5 | 1.00 | LC8 | izboène sile - |
| CO55 | S Ch | LC1 + 0.7*LC2 + 0.5*LC4 + LC6 + LC7 | 1 | 1.00 | LC1 | stalna |
| | | | 2 | 0.70 | LC2 | koristna etaža |
| | | | 3 | 0.50 | LC4 | sneg 2 |
| | | | 4 | 1.00 | LC6 | veter - |
| | | | 5 | 1.00 | LC7 | izboène sile + |
| CO56 | S Ch | LC1 + 0.7*LC2 + 0.5*LC4 + LC6 + LC8 | 1 | 1.00 | LC1 | stalna |
| | | | 2 | 0.70 | LC2 | koristna etaža |
| | | | 3 | 0.50 | LC4 | sneg 2 |
| | | | 4 | 1.00 | LC6 | veter - |
| | | | 5 | 1.00 | LC8 | izboène sile - |

## 2.7 RESULT COMBINATIONS

| Result Combin | Description | Loading |
|---|---|---|
| RC1 | ULS (STR/GEO) - Permanent / transient - Eq. 6.10 | CO1/p or to CO28 |
| RC2 | SLS - Characteristic | CO29/p or to CO56 |
| RC6 | ULS (STR/GEO) - Seismic | LC1/p + 0.6*LC2 + RC5 |

# LC1: STALNA

LC 1: stalna
Loads [kN/m^2]

Isometric

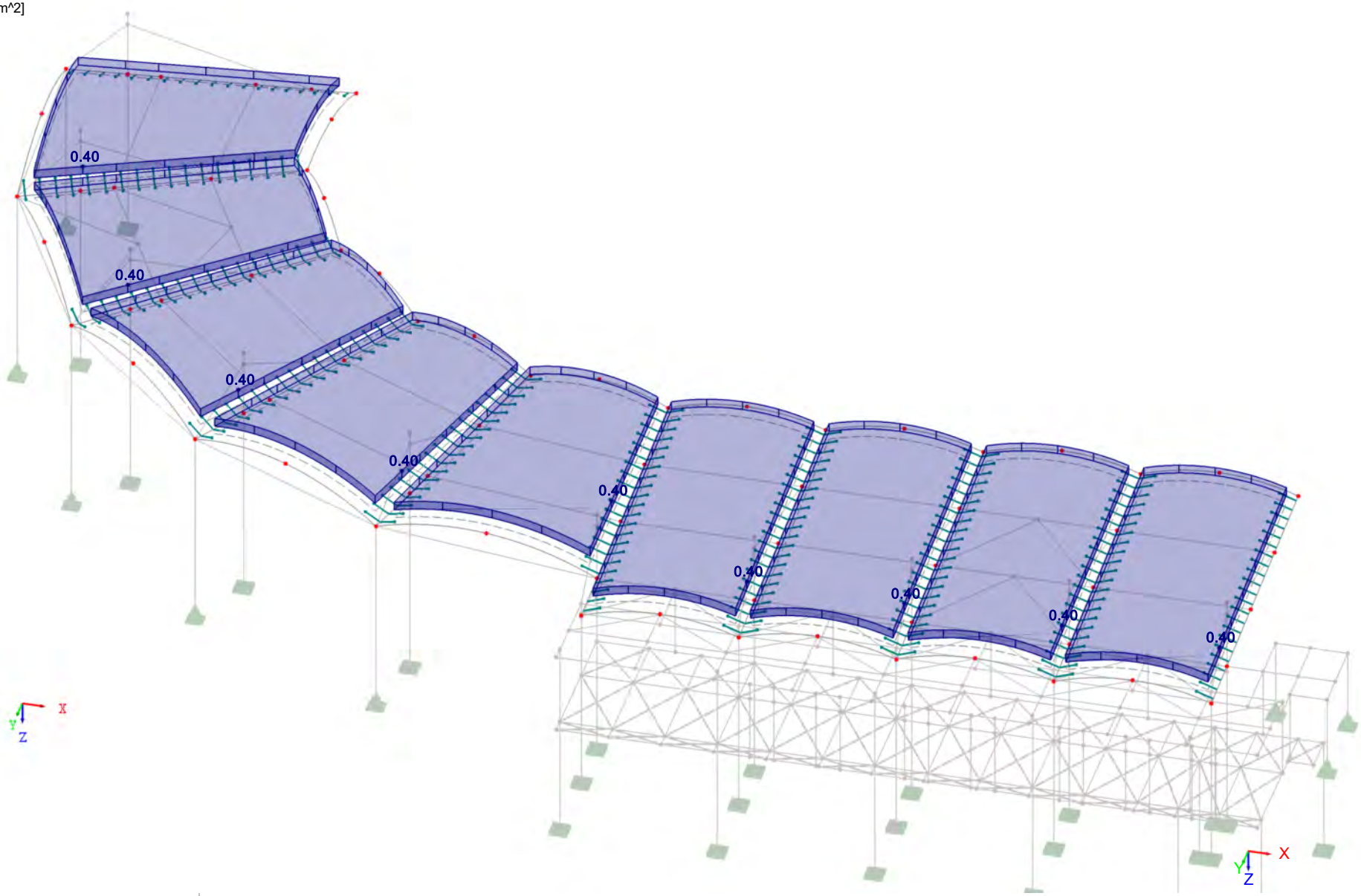

# LC3: SNEG 1

LC 3: sneg 1
Loads [kN/m^2]

Isometric

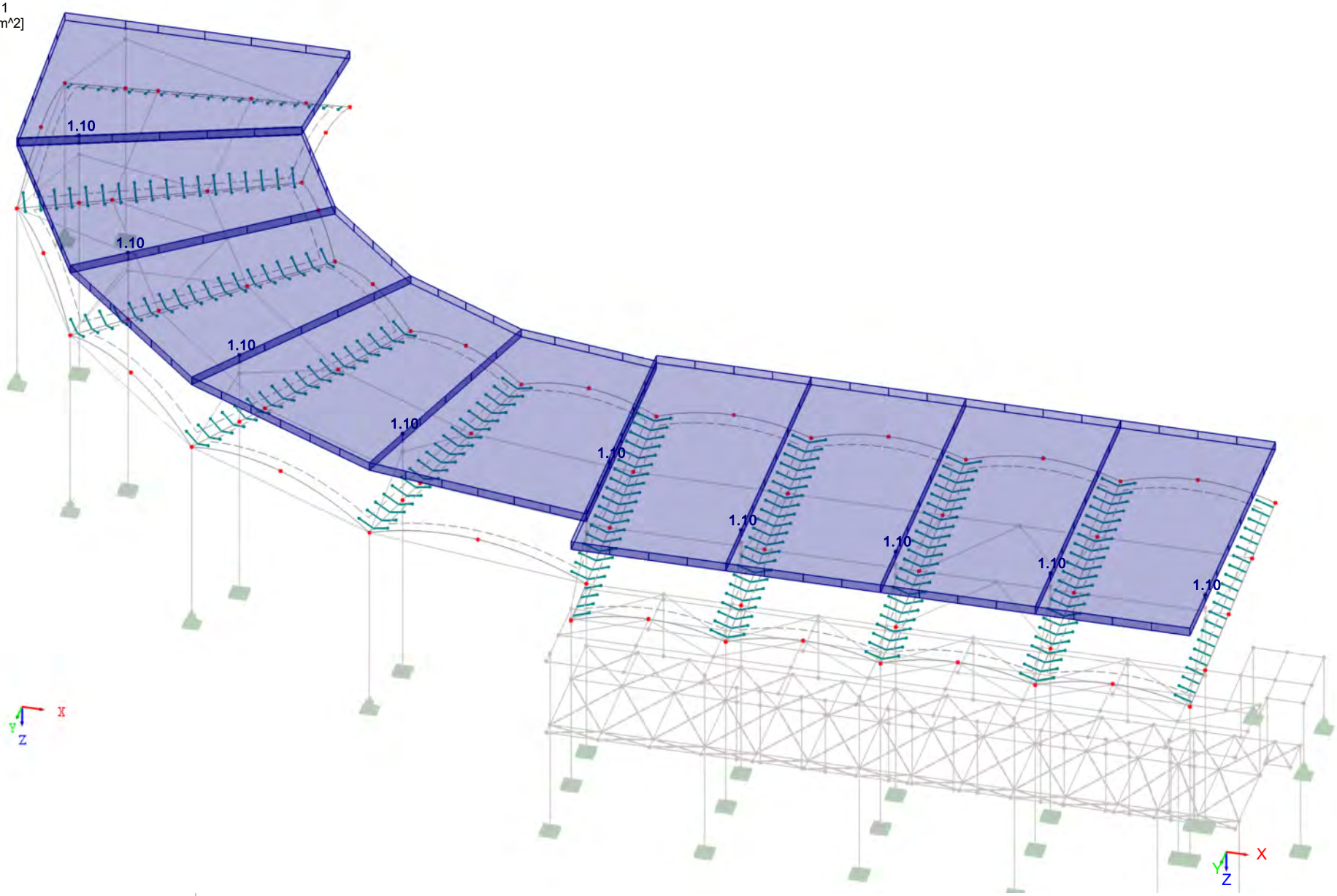

# LC4: SNEG 2

LC 4: sneg 2
Loads [kN/m^2]

Isometric

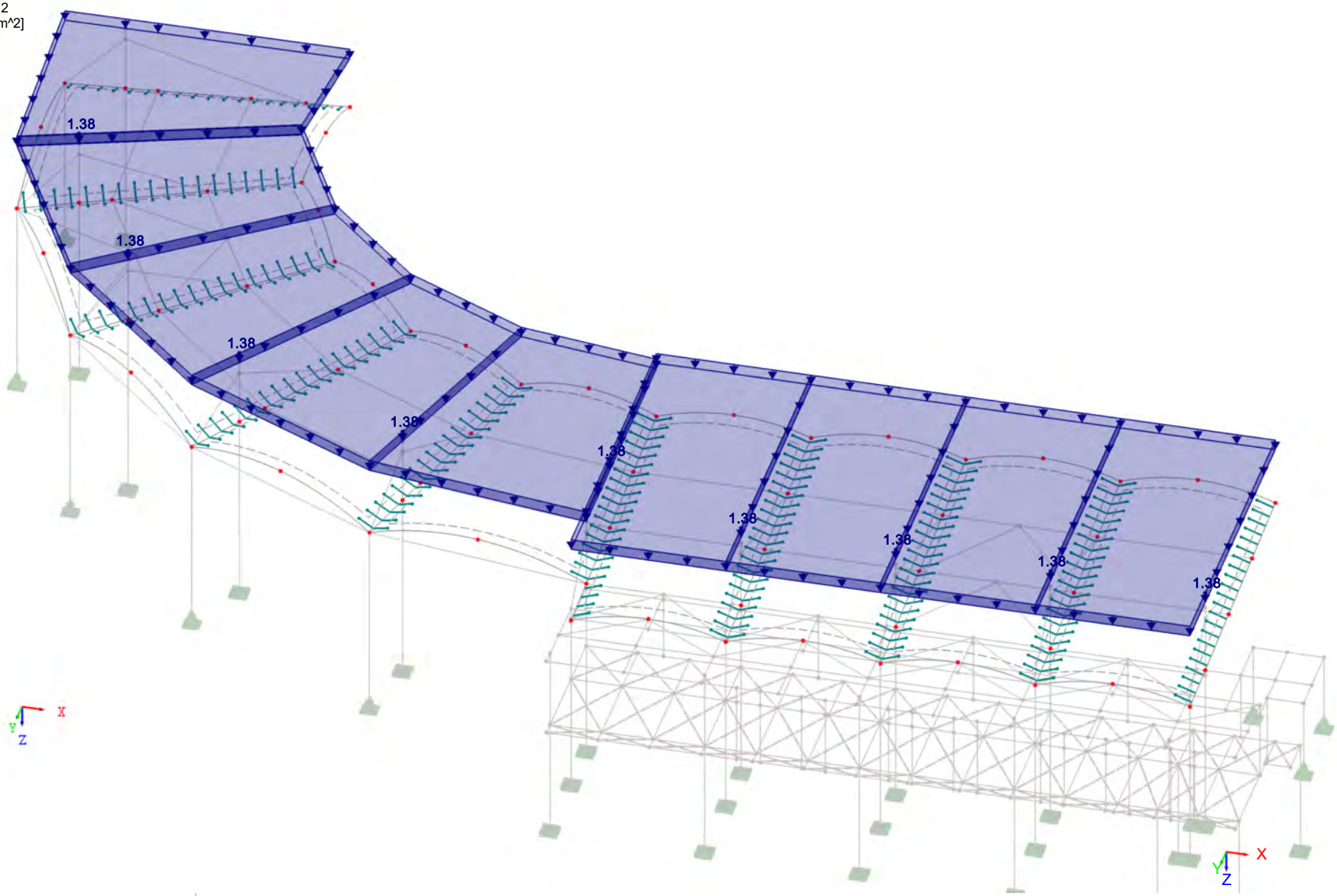

# LC5: VETER +

LC 5: veter +
Loads [kN/m^2]

Isometric

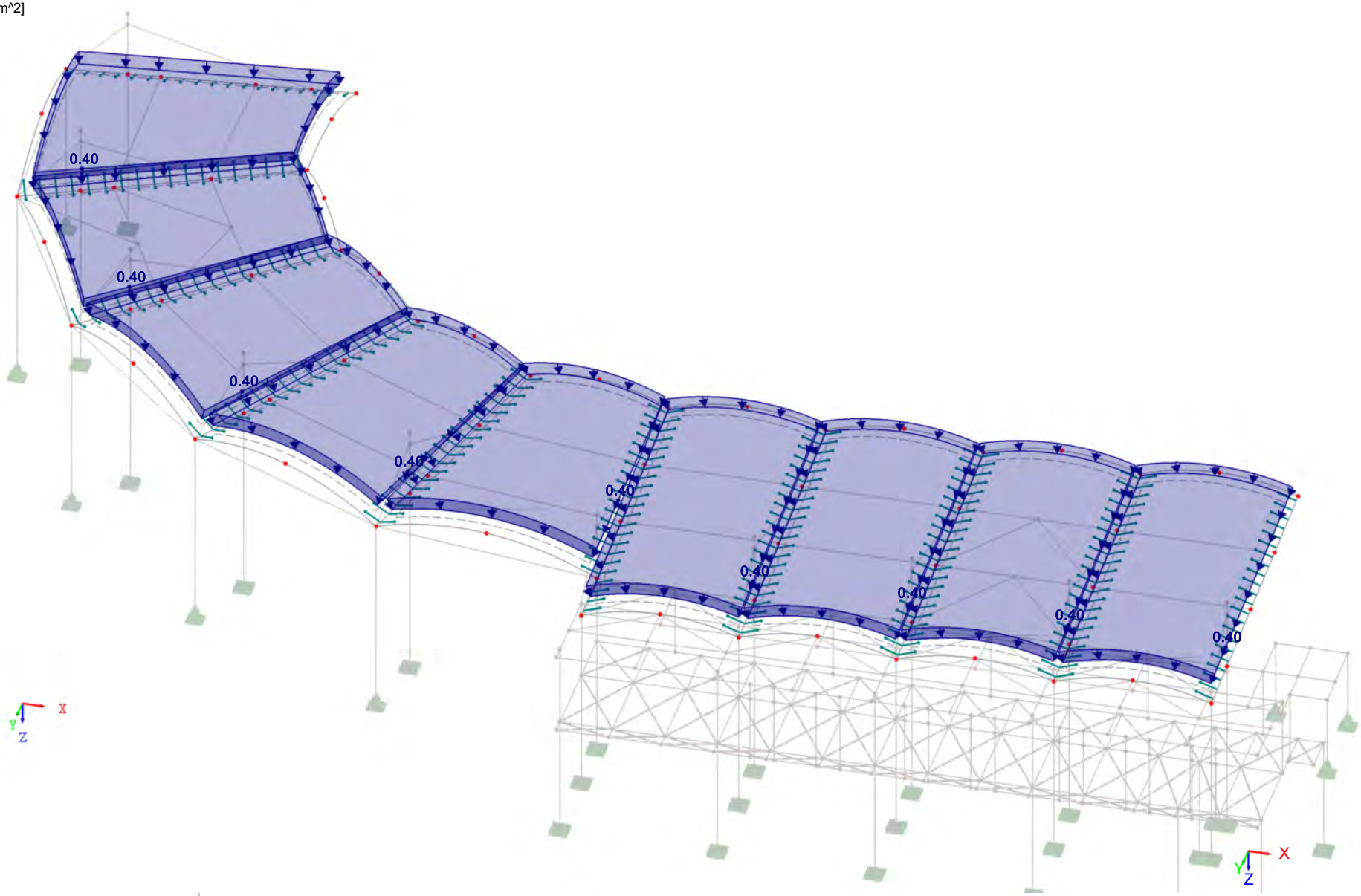

# LC6: VETER -

LC 6: veter -
Loads [kN/m^2]

Isometric

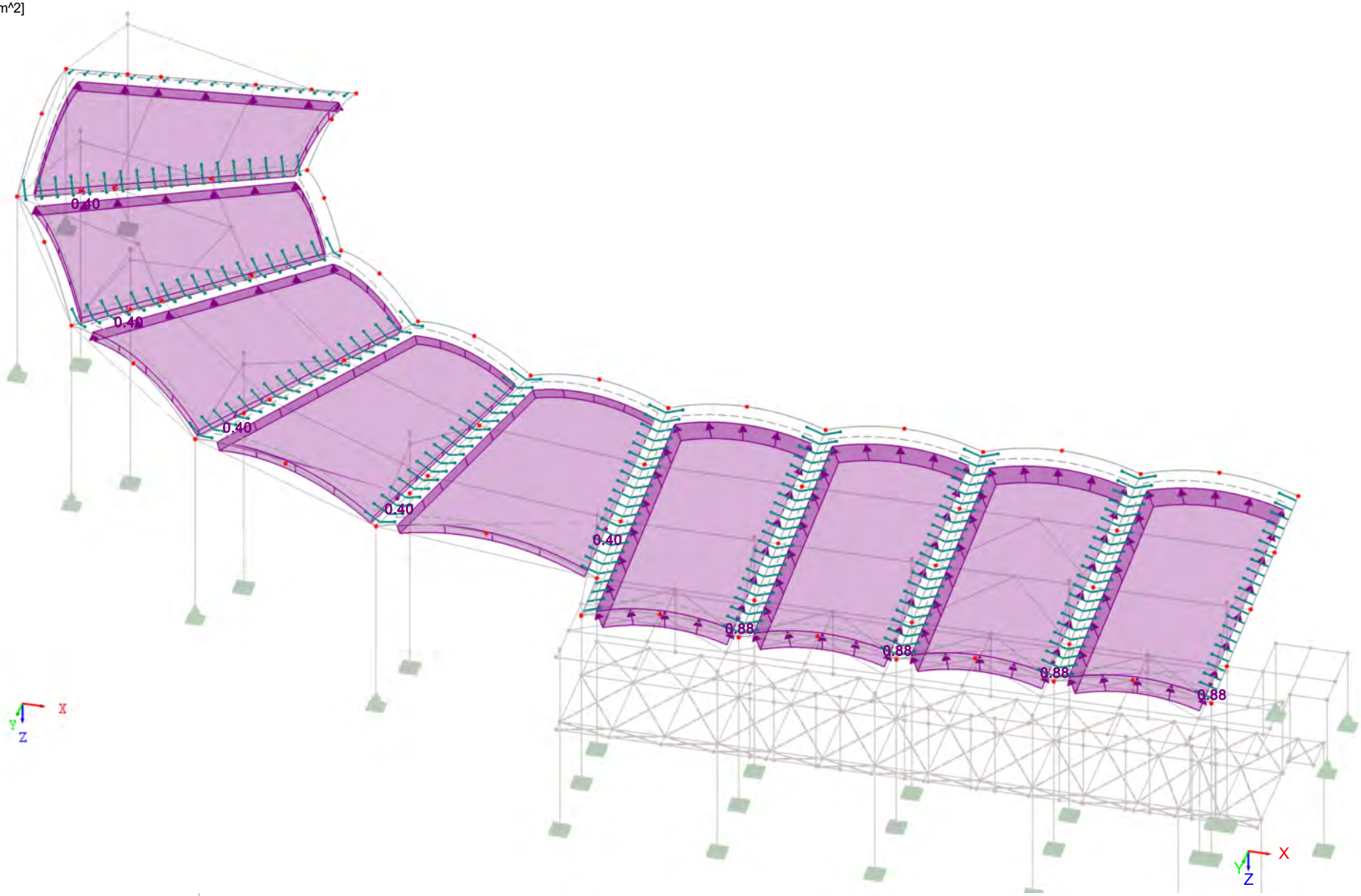

# LC7: IZBOÈNE SILE +

LC 7: izbočne sile +
Loads [kN/m]

Isometric

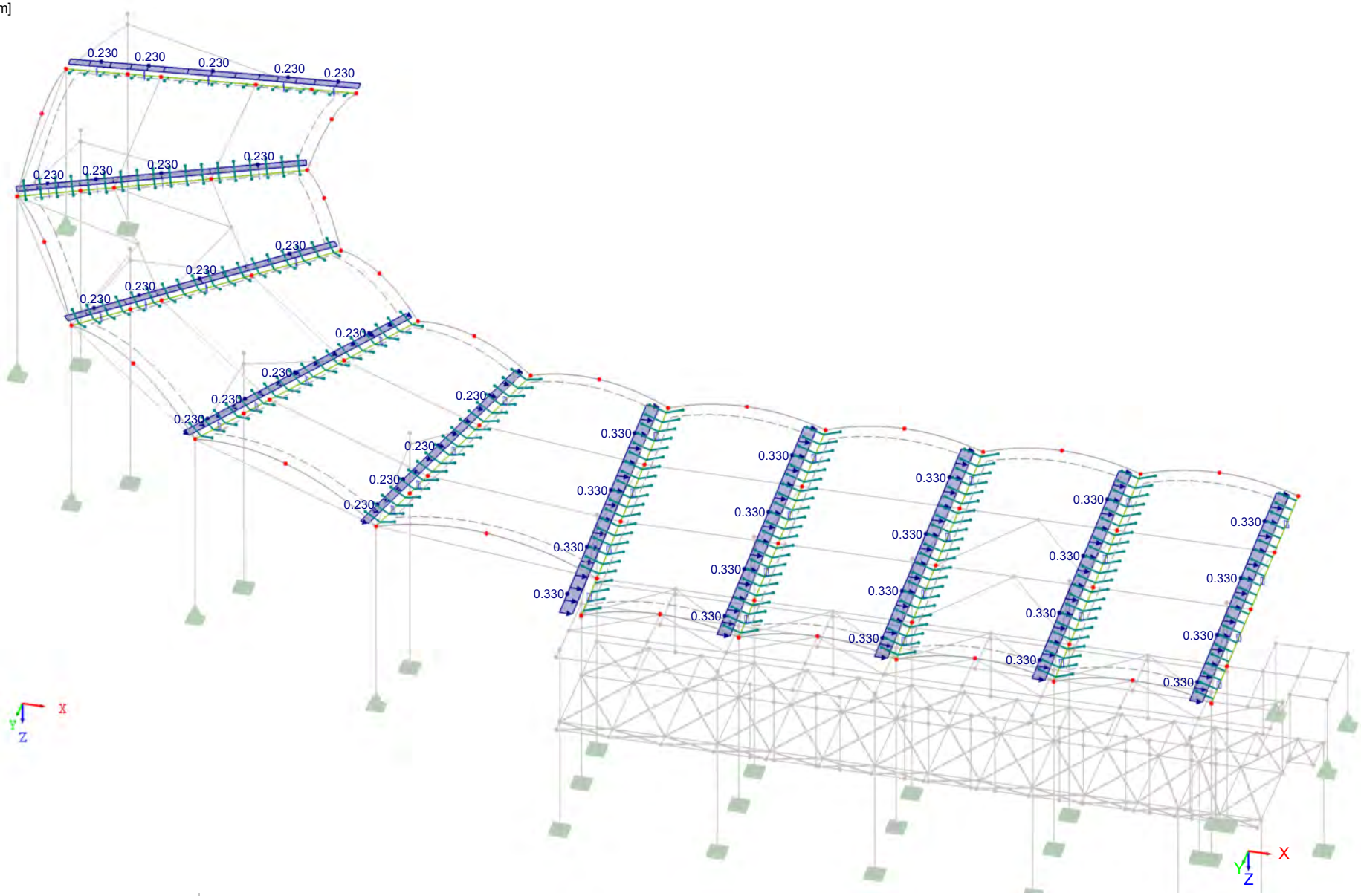

# LC8: IZBOÈNE SILE -

LC 8: izbočne sile -
Loads [kN/m]

Isometric

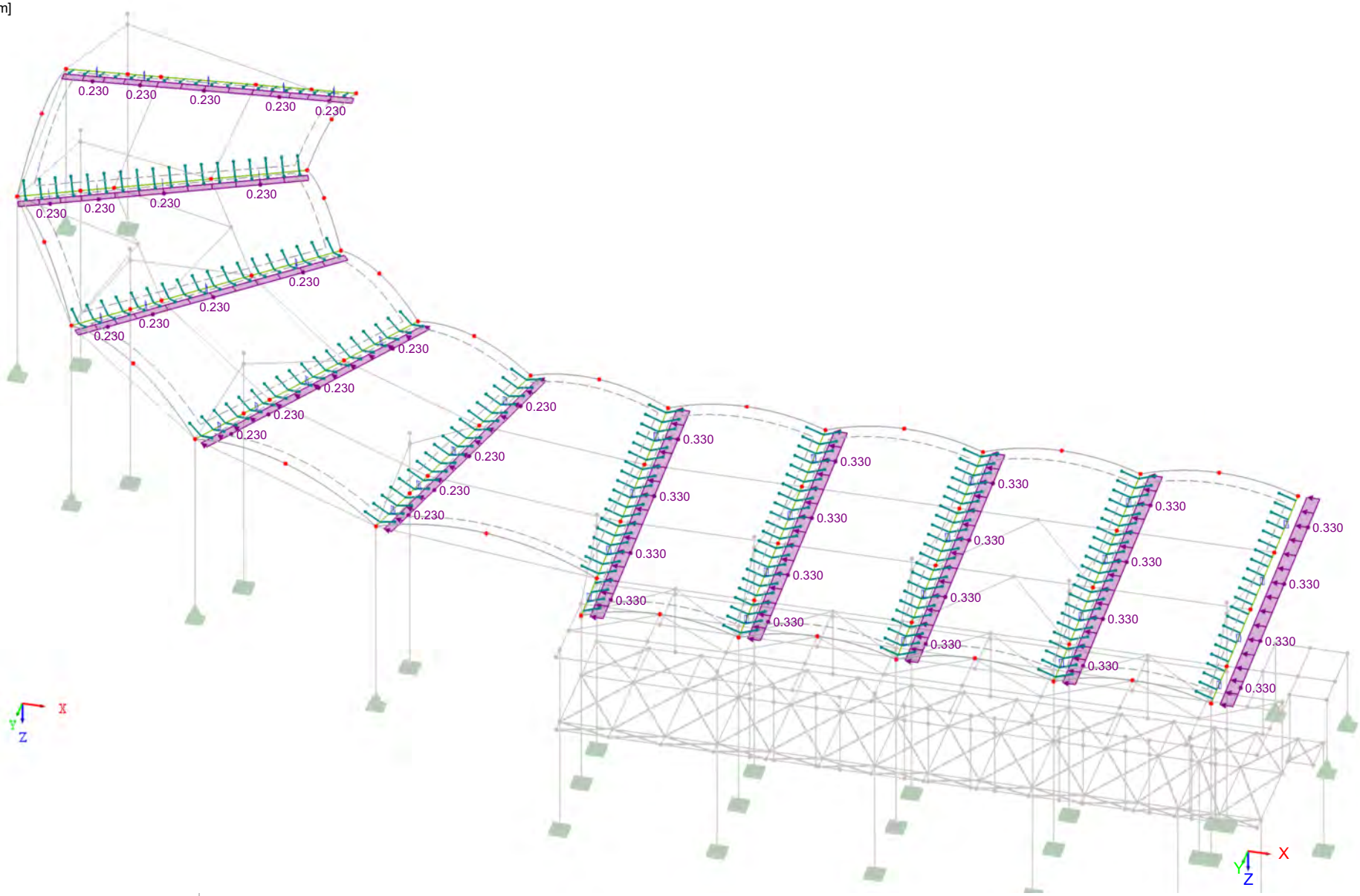

# $M_x$: MSN

RC 1: ULS (STR/GEO) - Permanent / transient - Eq. 6.10
Surfaces Basic Internal Forces m-x
Result Combinations: Max Values
Values: m-x [kNm/m]

In Z-direction

Base values
$m_x$ [kNm/m]
5.48
4.97
4.47
3.97
3.47
2.96
2.46
1.96
1.46
0.95
0.45
-0.05
Max : 5.48
Min : -0.05

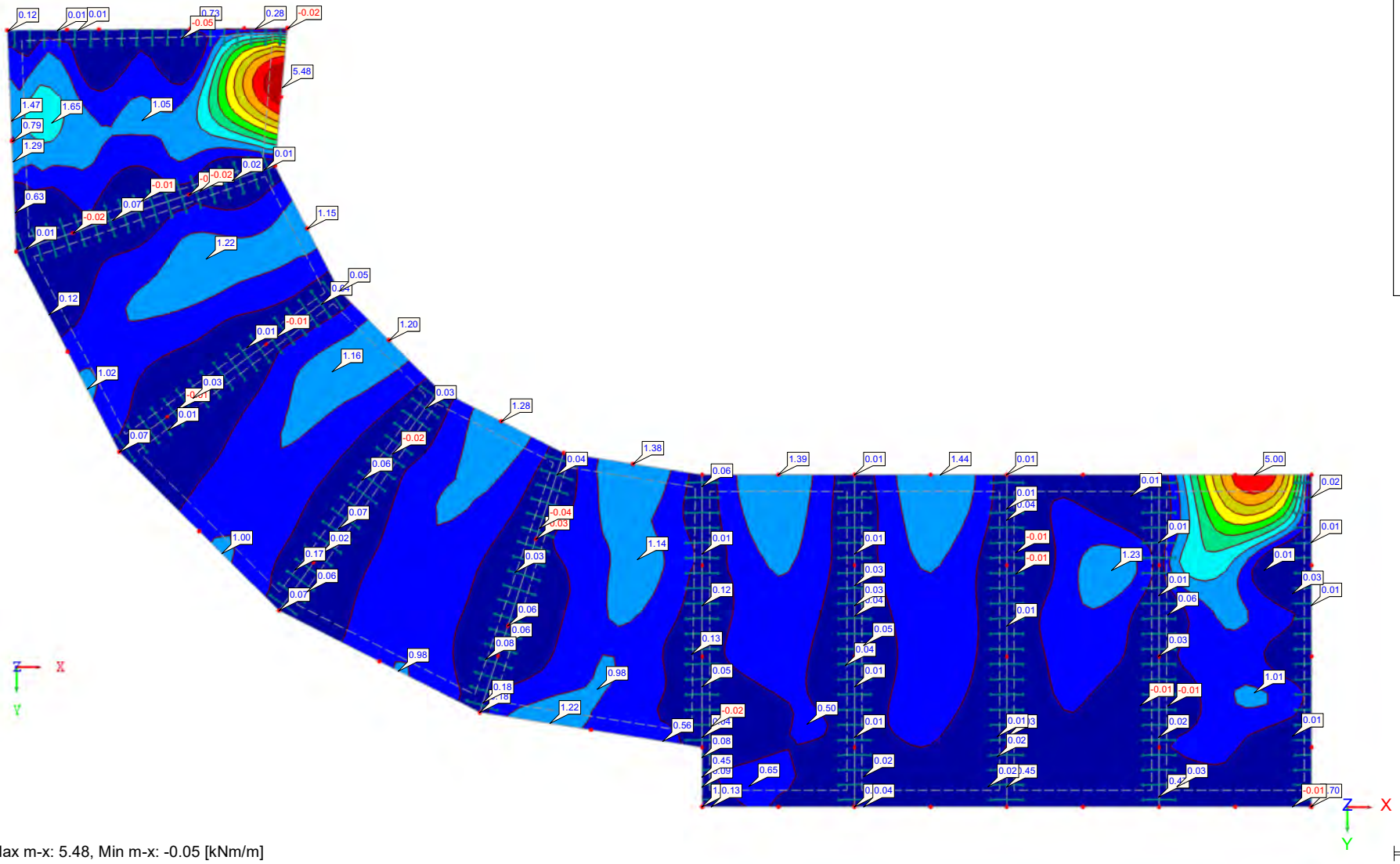

Surfaces Max m-x: 5.48, Min m-x: -0.05 [kNm/m]

5.544 m

# $M_x$: MSN

RC 1: ULS (STR/GEO) - Permanent / transient - Eq. 6.10
Surfaces Basic Internal Forces m-x
Result Combinations: Min Values
Values: m-x [kNm/m]

In Z-direction

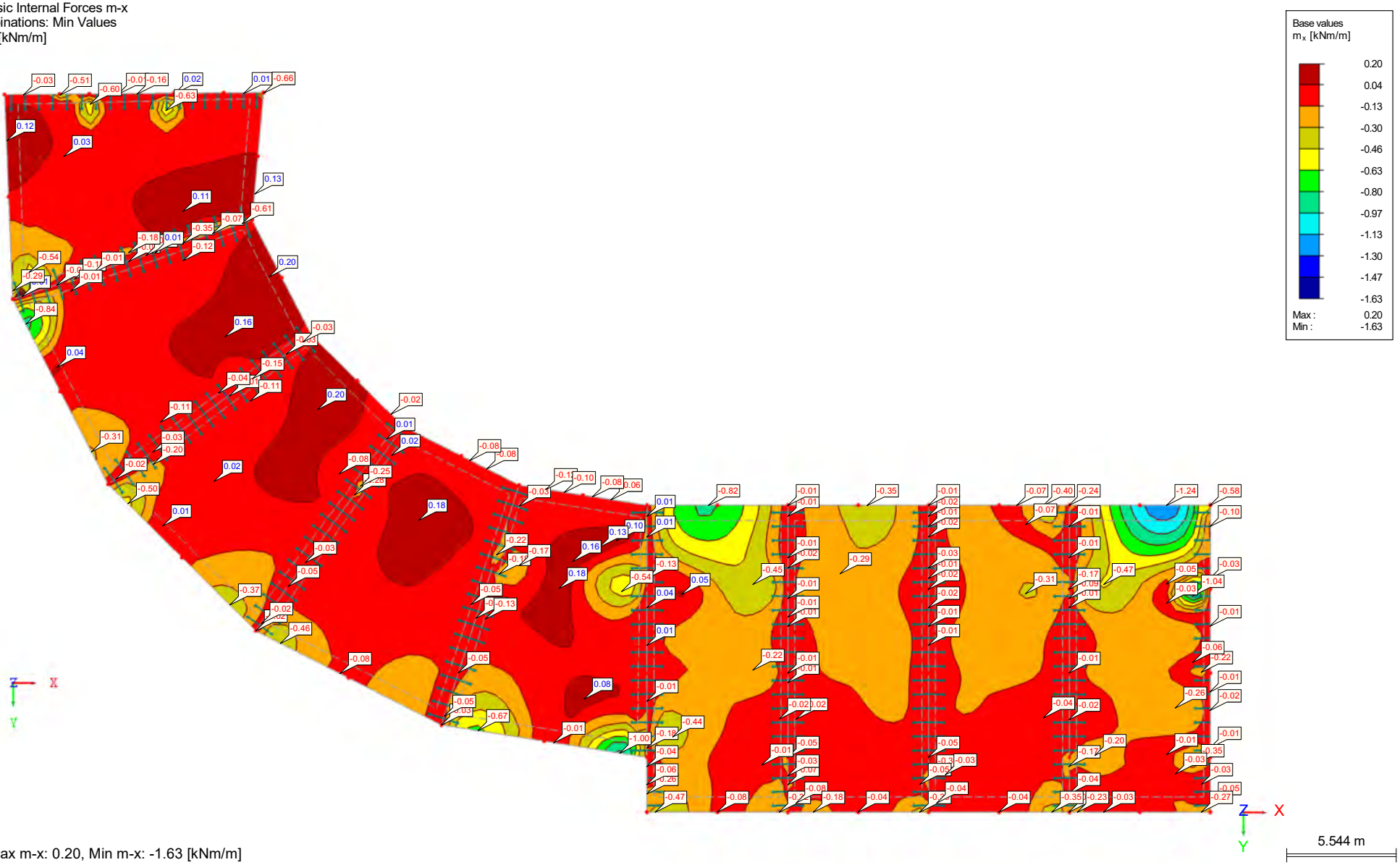


Surfaces Max m-x: 0.20, Min m-x: -1.63 [kNm/m]

# $M_y$: MSN

RC 1: ULS (STR/GEO) - Permanent / transient - Eq. 6.10
Surfaces Basic Internal Forces m-y
Result Combinations: Max Values
Values: m-y [kNm/m]

In Z-direction

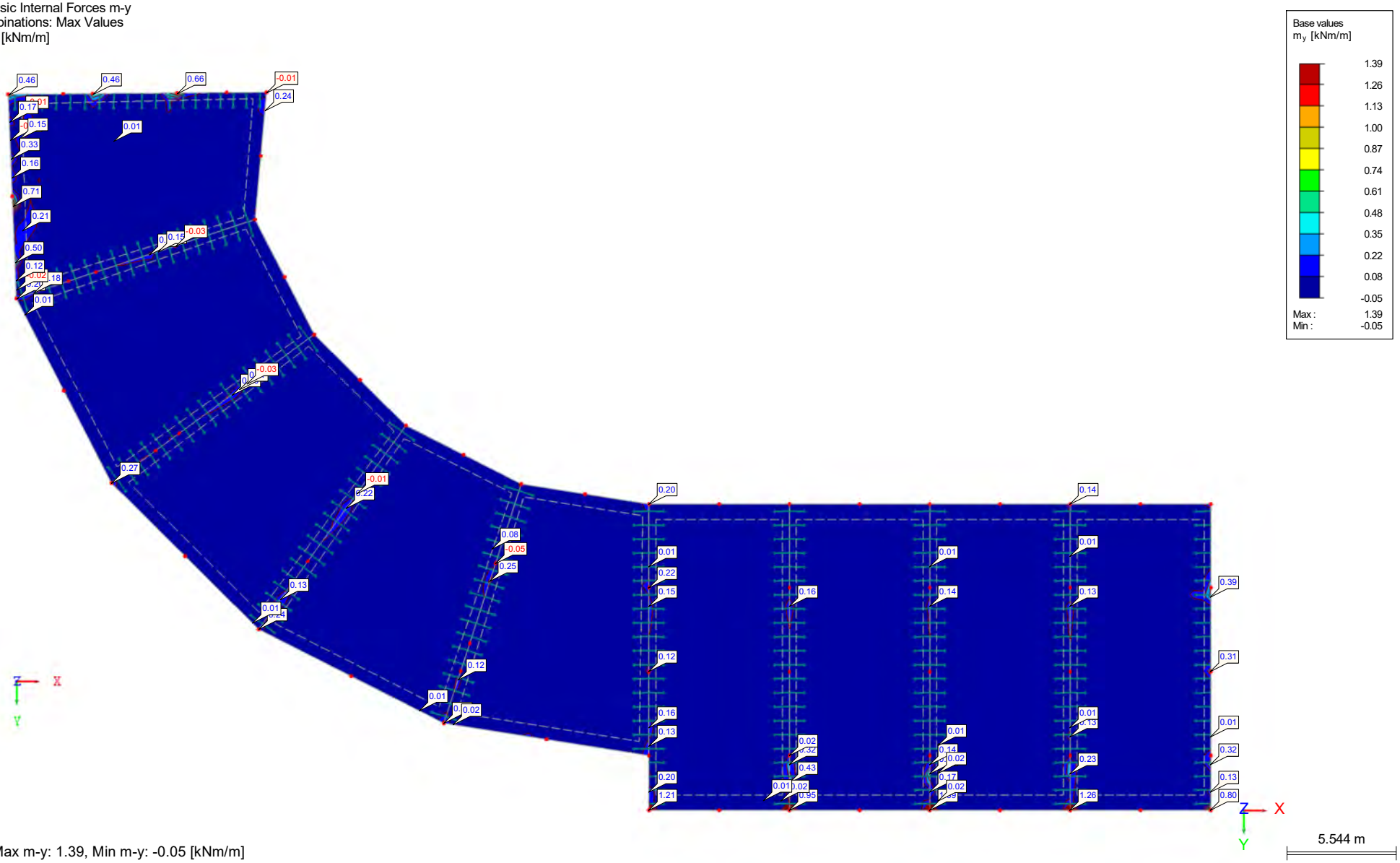


Surfaces Max m-y: 1.39, Min m-y: -0.05 [kNm/m]

# $M_y$: MSN

RC 1: ULS (STR/GEO) - Permanent / transient - Eq. 6.10
Surfaces Basic Internal Forces m-y
Result Combinations: Min Values
Values: m-y [kNm/m]

In Z-direction

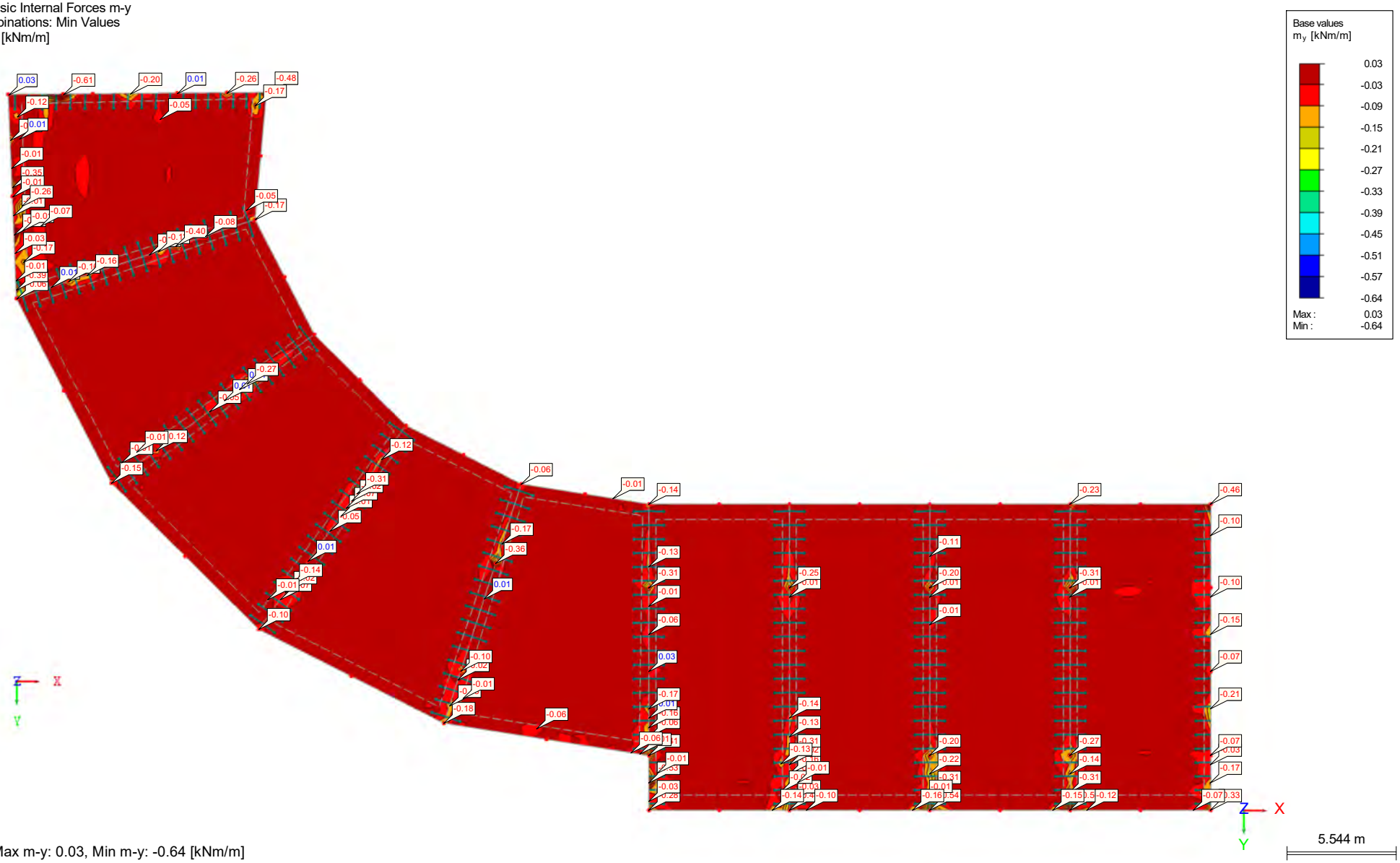


Surfaces Max m-y: 0.03, Min m-y: -0.64 [kNm/m]

# $N_x$: MSN

RC 1: ULS (STR/GEO) - Permanent / transient - Eq. 6.10
Surfaces Basic Internal Forces n-x
Result Combinations: Max Values
Values: n-x [kN/m]

In Z-direction

Base values
$n_x$ [kN/m]

| |
|---|
| 141.23 |
| 127.70 |
| 114.17 |
| 100.64 |
| 87.11 |
| 73.58 |
| 60.05 |
| 46.52 |
| 32.99 |
| 19.46 |
| 5.93 |
| -7.60 |

Max : 141.23
Min : -7.60

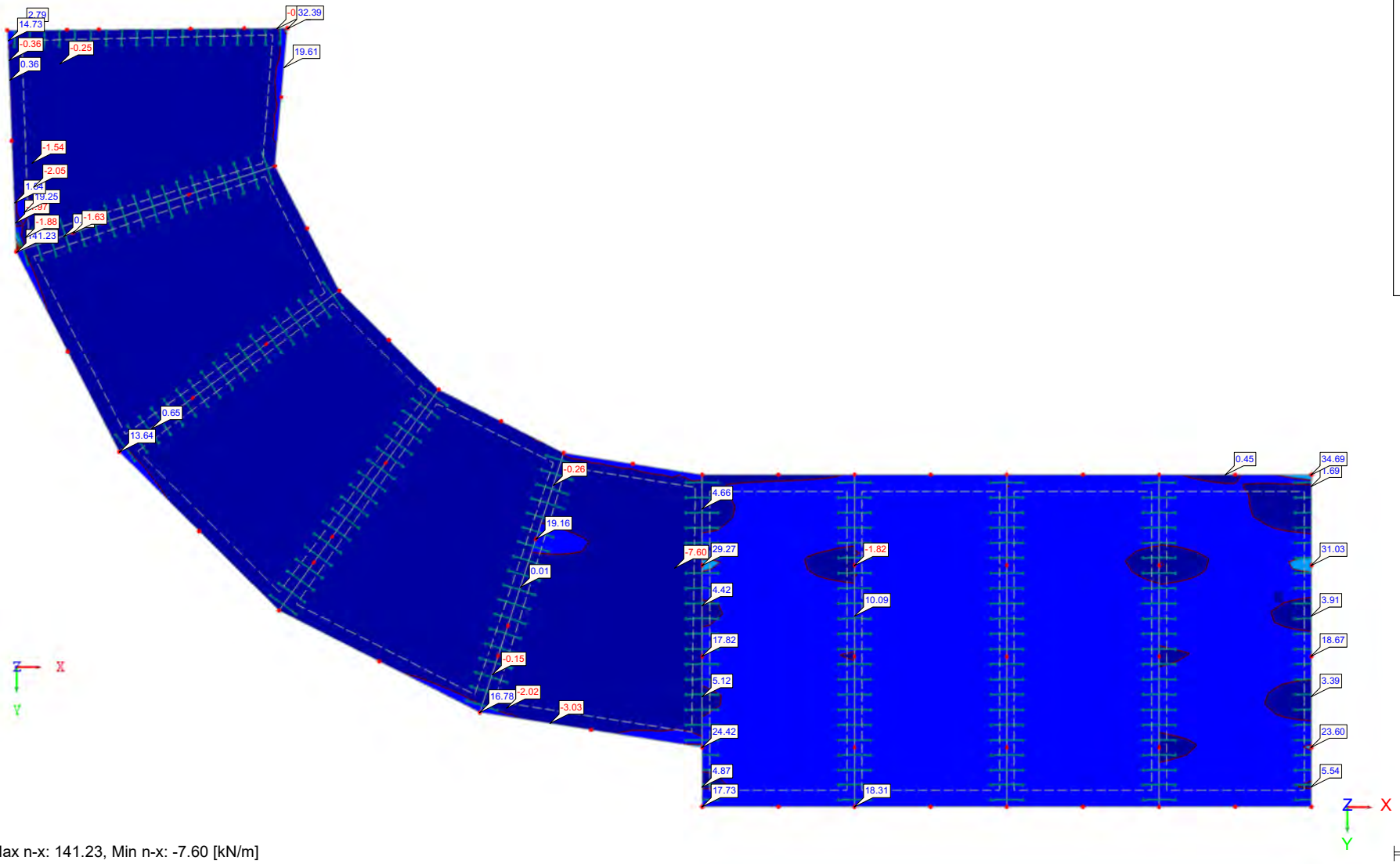


5.544 m

Surfaces Max n-x: 141.23, Min n-x: -7.60 [kN/m]

# $N_x$: MSN

RC 1: ULS (STR/GEO) - Permanent / transient - Eq. 6.10
Surfaces Basic Internal Forces n-x
Result Combinations: Min Values
Values: n-x [kN/m]

In Z-direction

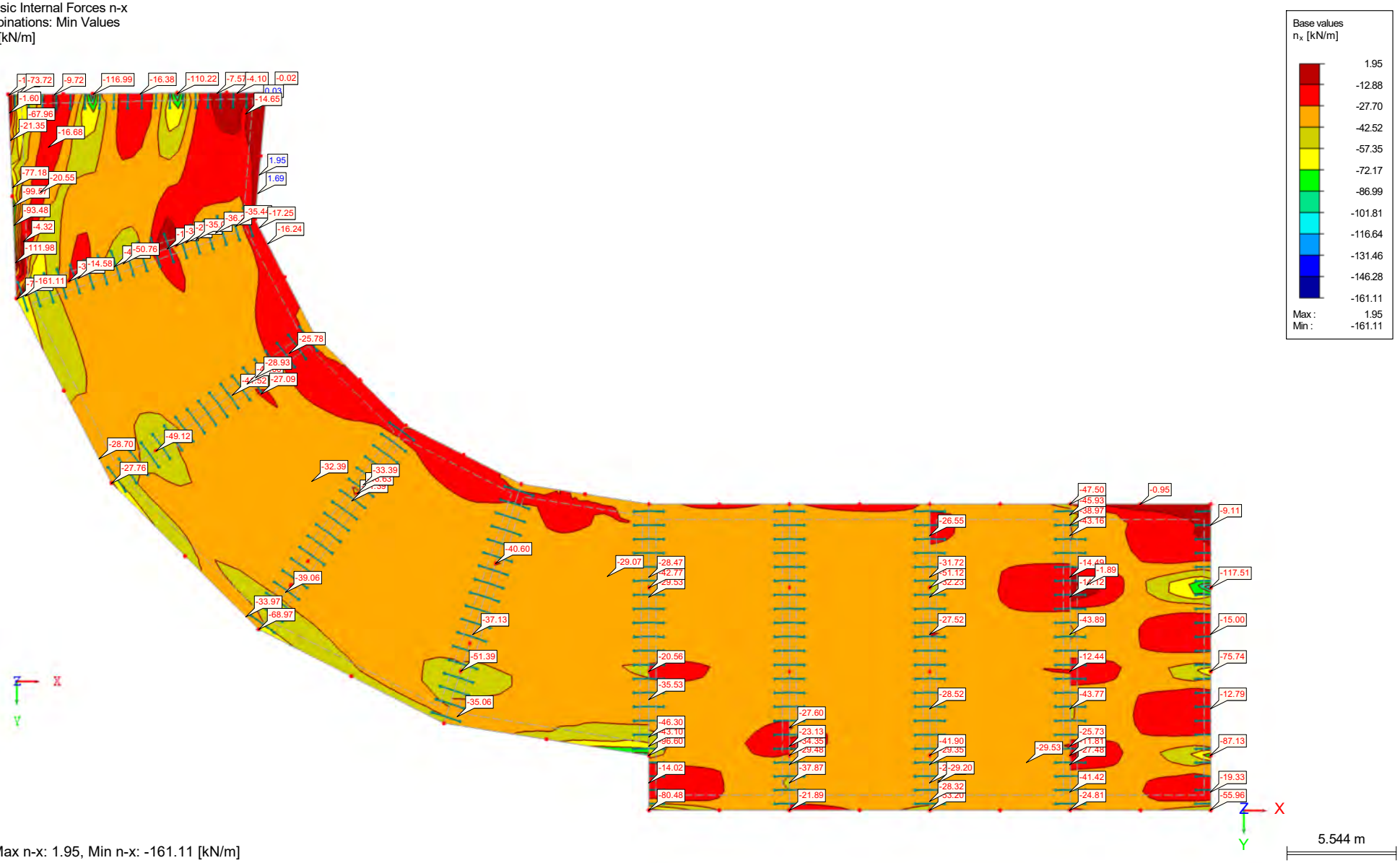


Surfaces Max n-x: 1.95, Min n-x: -161.11 [kN/m]

# $N_y$: MSN

RC 1: ULS (STR/GEO) - Permanent / transient - Eq. 6.10
Surfaces Basic Internal Forces n-y
Result Combinations: Max Values
Values: n-y [kN/m]

In Z-direction

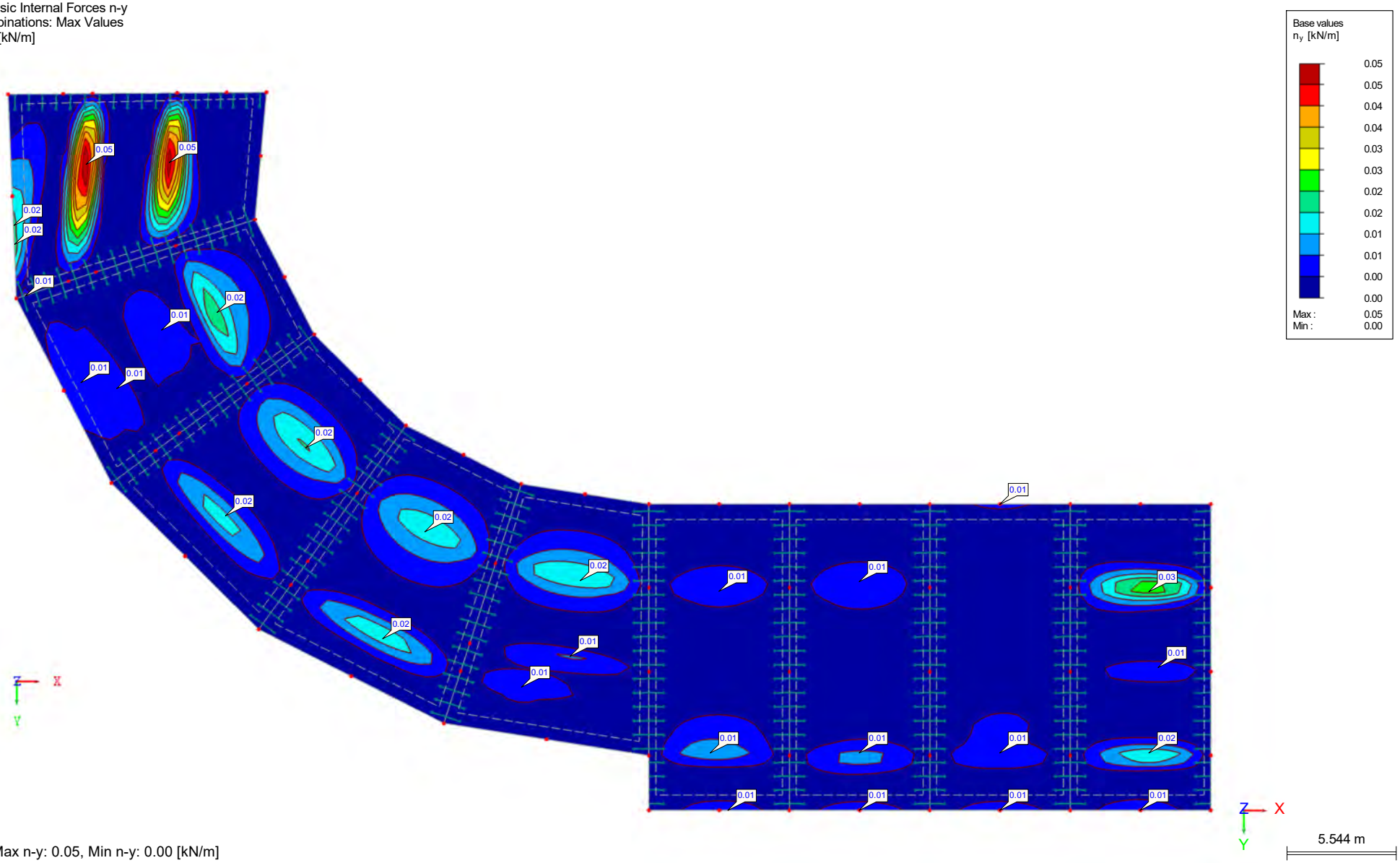


Surfaces Max n-y: 0.05, Min n-y: 0.00 [kN/m]

# $N_y$: MSN

RC 1: ULS (STR/GEO) - Permanent / transient - Eq. 6.10
Surfaces Basic Internal Forces n-y
Result Combinations: Min Values
Values: n-y [kN/m]

In Z-direction

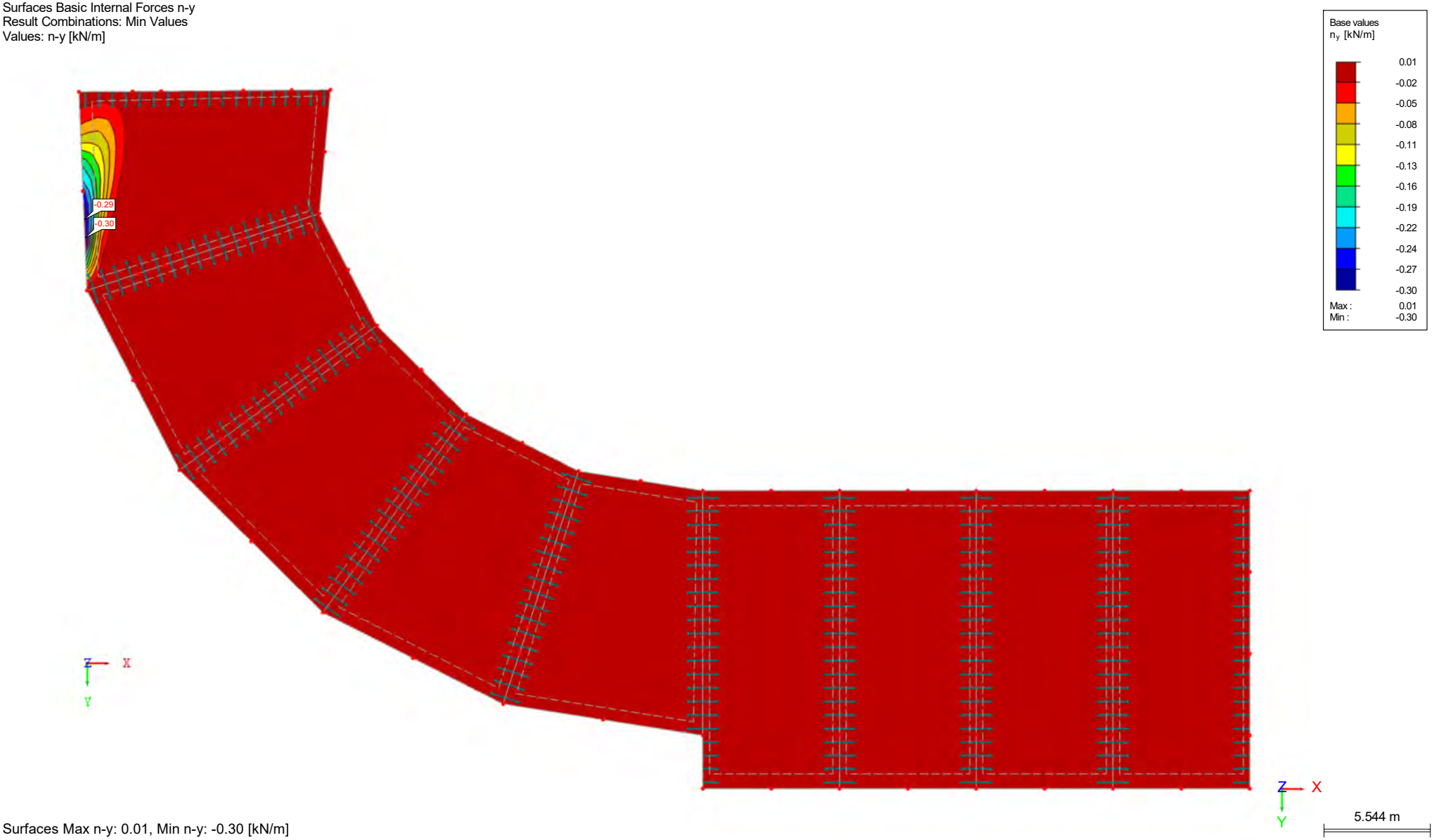


Surfaces Max n-y: 0.01, Min n-y: -0.30 [kN/m]

# $M_x$: MSU KARAKTERISTIÈNA KOMB.

RC 2: SLS - Characteristic
Surfaces Basic Internal Forces m-x
Result Combinations: Max Values
Values: m-x [kNm/m]

In Z-direction

Base values
$m_x$ [kNm/m]
3.70
3.36
3.01
2.67
2.33
1.99
1.65
1.31
0.96
0.62
0.28
-0.06
Max : 3.70
Min : -0.06

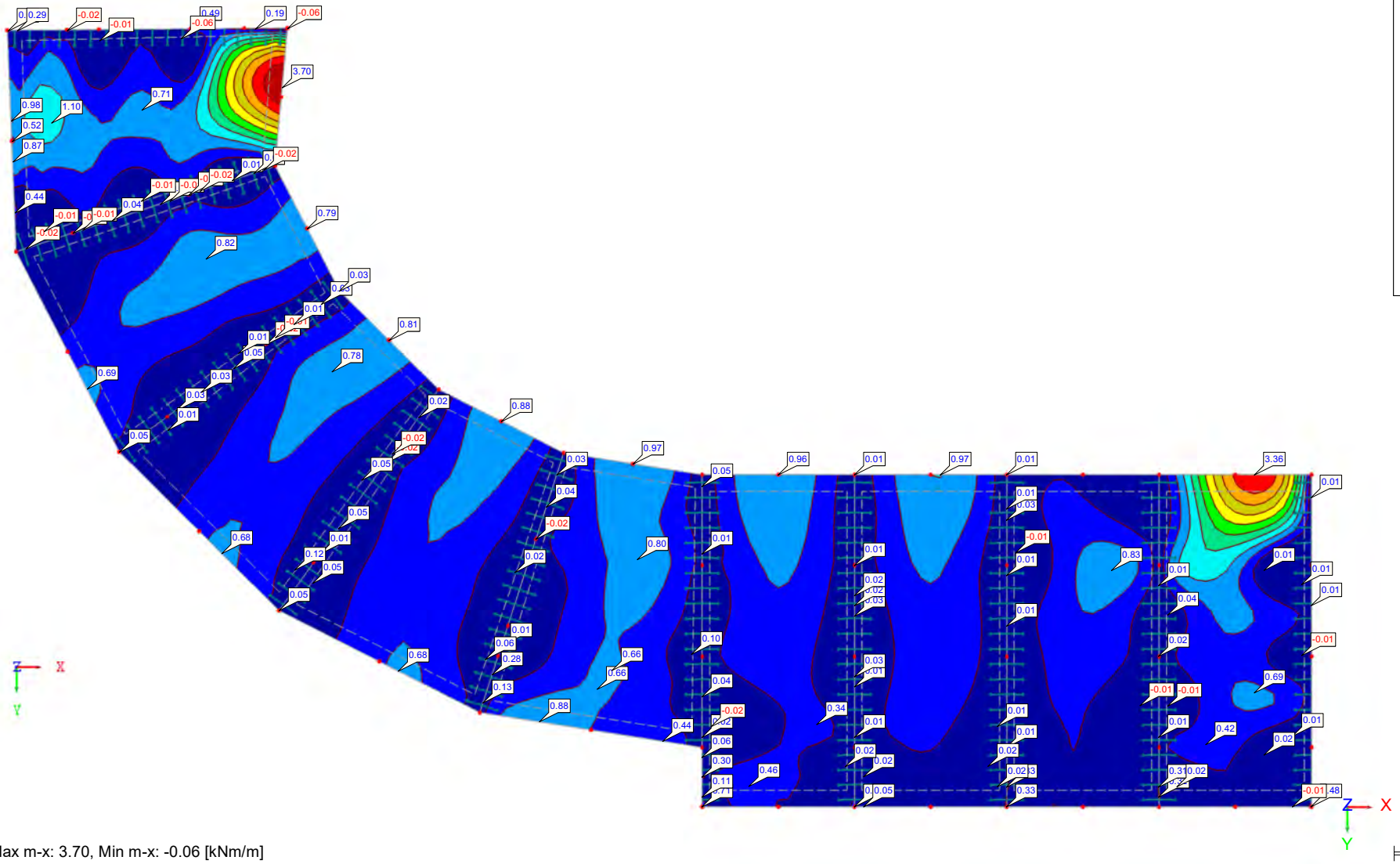


Surfaces Max m-x: 3.70, Min m-x: -0.06 [kNm/m]

# $M_x$: MSU KARAKTERISTIÈNA KOMB.

RC 2: SLS - Characteristic
Surfaces Basic Internal Forces m-x
Result Combinations: Min Values
Values: m-x [kNm/m]

In Z-direction

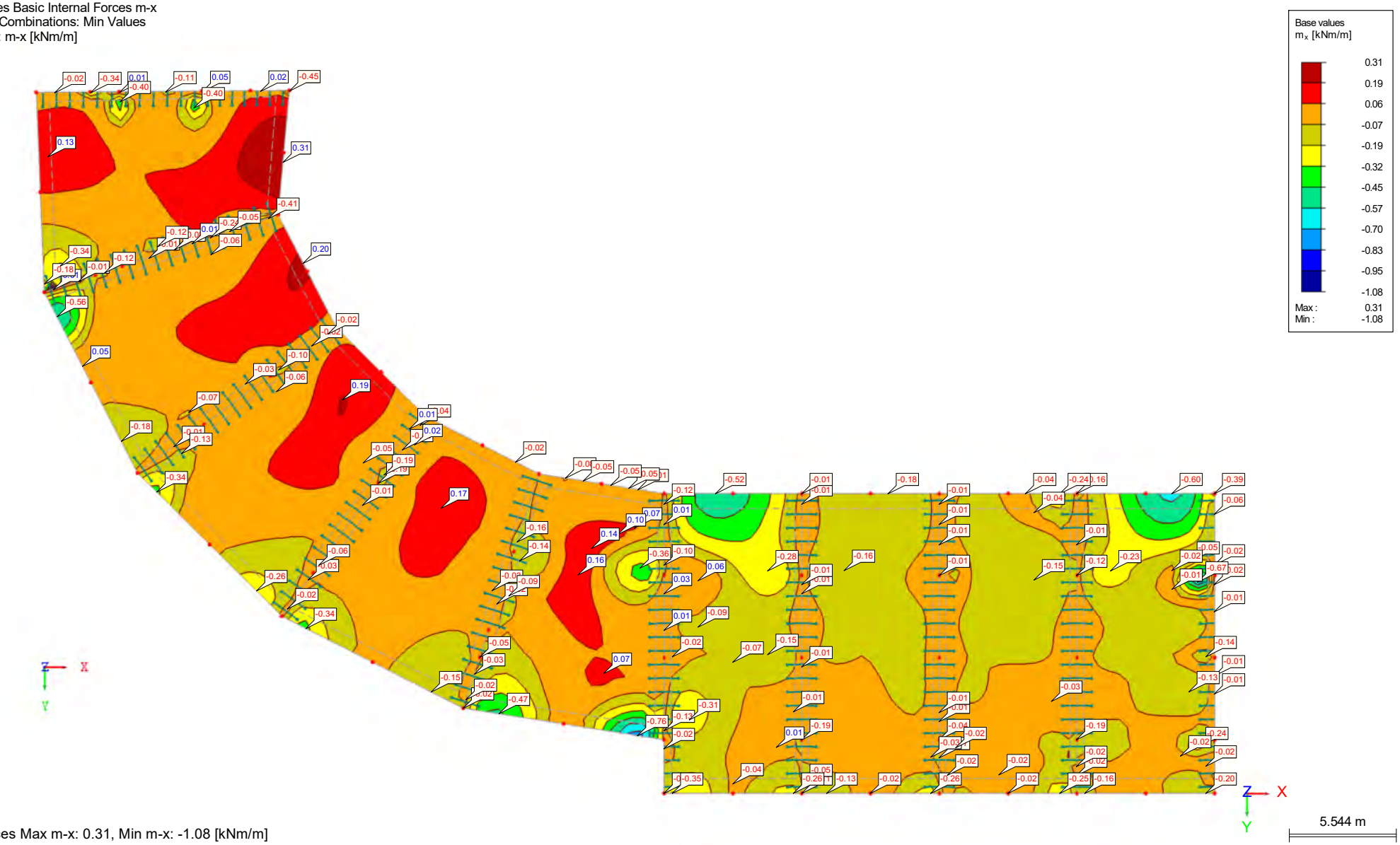


Surfaces Max m-x: 0.31, Min m-x: -1.08 [kNm/m]

# $N_x$: MSU KARAKTERISTIÈNA KOMB.

RC 2: SLS - Characteristic
Surfaces Basic Internal Forces n-x
Result Combinations: Max Values
Values: n-x [kN/m]

In Z-direction

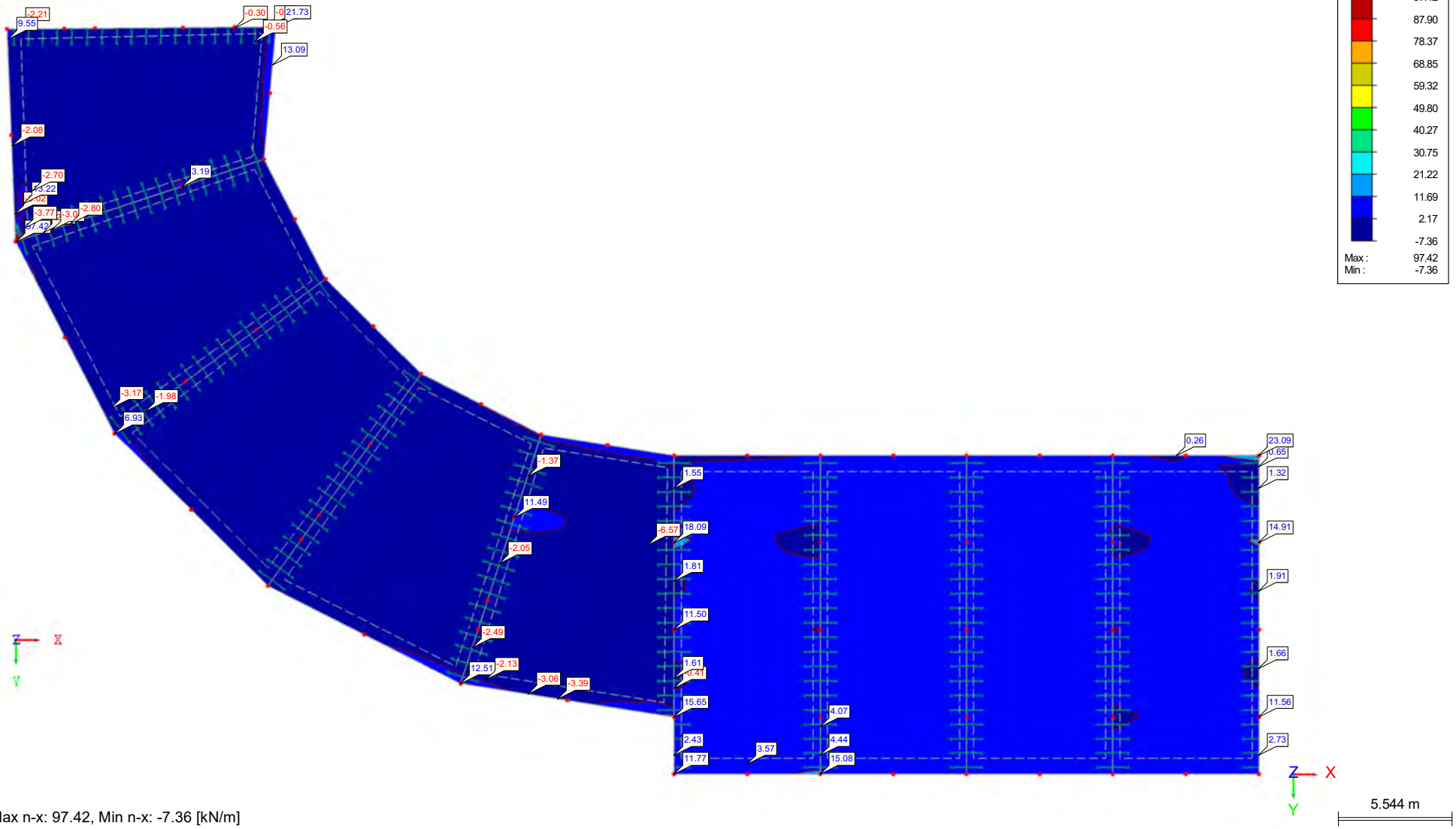


Surfaces Max n-x: 97.42, Min n-x: -7.36 [kN/m]

# $N_x$: MSU KARAKTERISTIÈNA KOMB.

RC 2: SLS - Characteristic
Surfaces Basic Internal Forces n-x
Result Combinations: Min Values
Values: n-x [kN/m]

In Z-direction

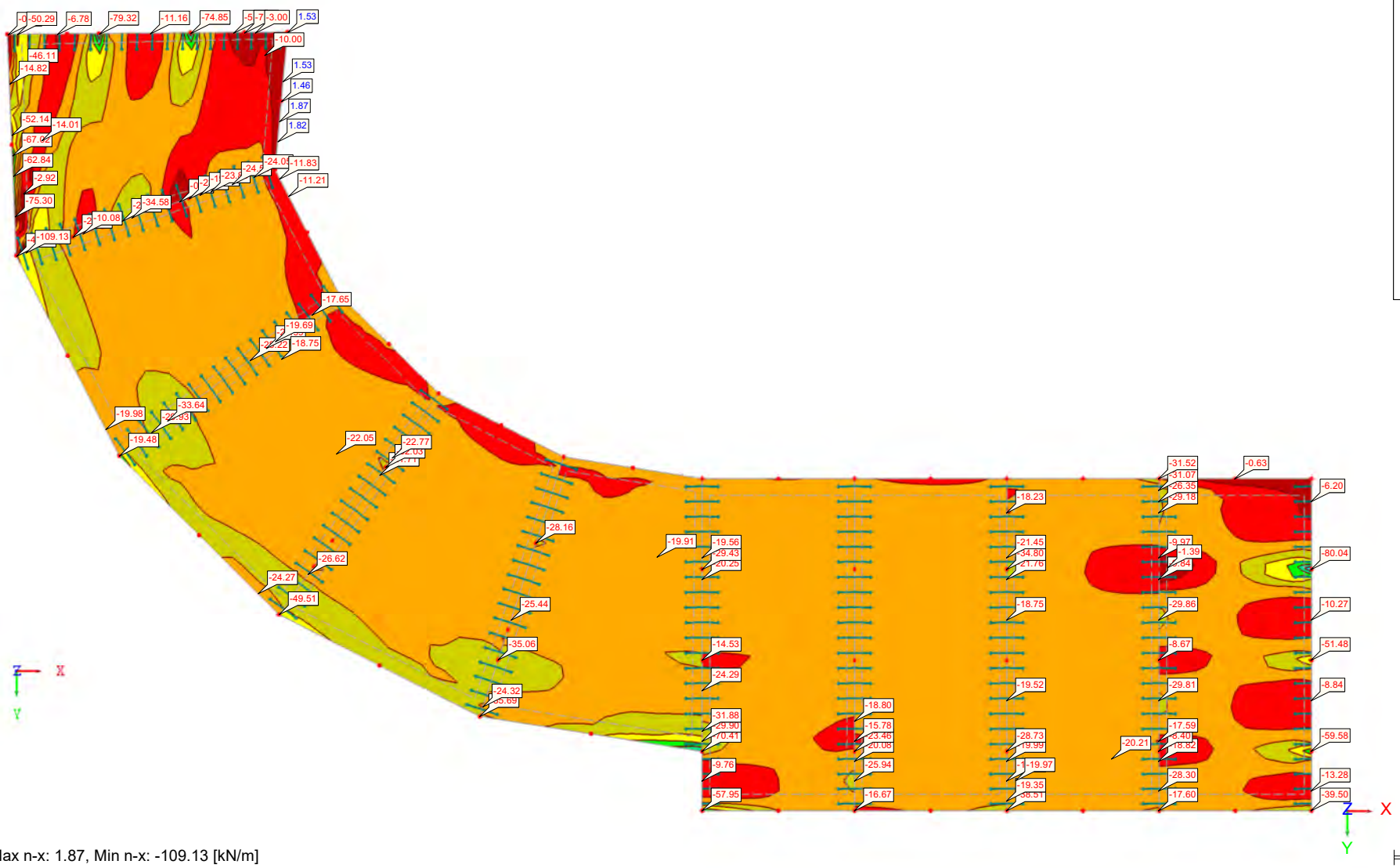


Surfaces Max n-x: 1.87, Min n-x: -109.13 [kN/m]

5.544 m

# DEFORMACIJE $U_z$: MSU KARAKTERISTIÈNA KOMB.

RC 2: SLS - Characteristic
Surfaces Local Deformations u-z
Result Combinations: Max Values
Values: u-z [mm]

In Z-direction

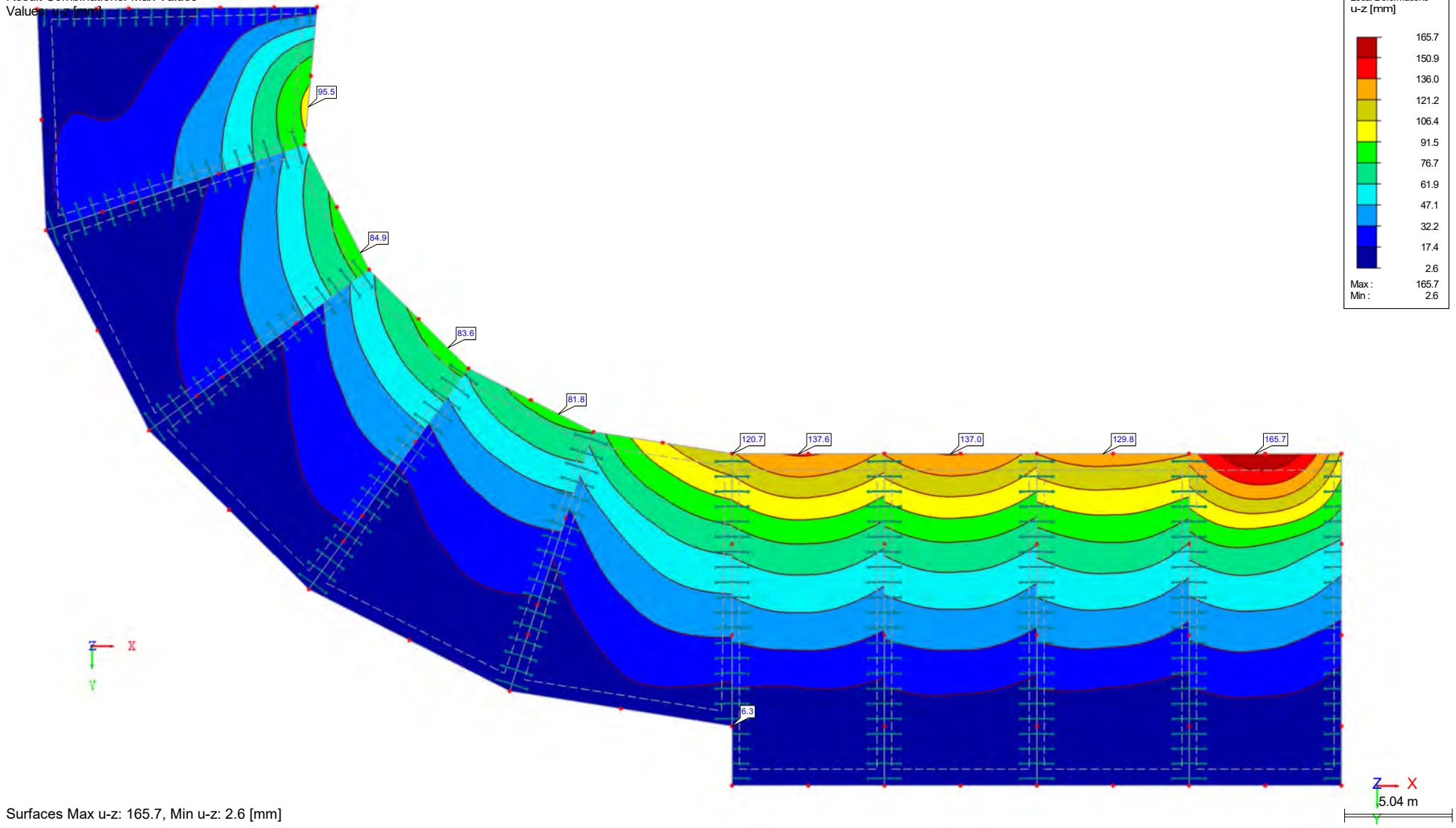


Surfaces Max u-z: 165.7, Min u-z: 2.6 [mm]

# DEFORMACIJE $U_z$: MSU KARAKTERISTIÈNA KOMB.

RC 2: SLS - Characteristic
Surfaces Local Deformations u-z
Result Combinations: Min Values
Values: u-z [mm]

In Z-direction

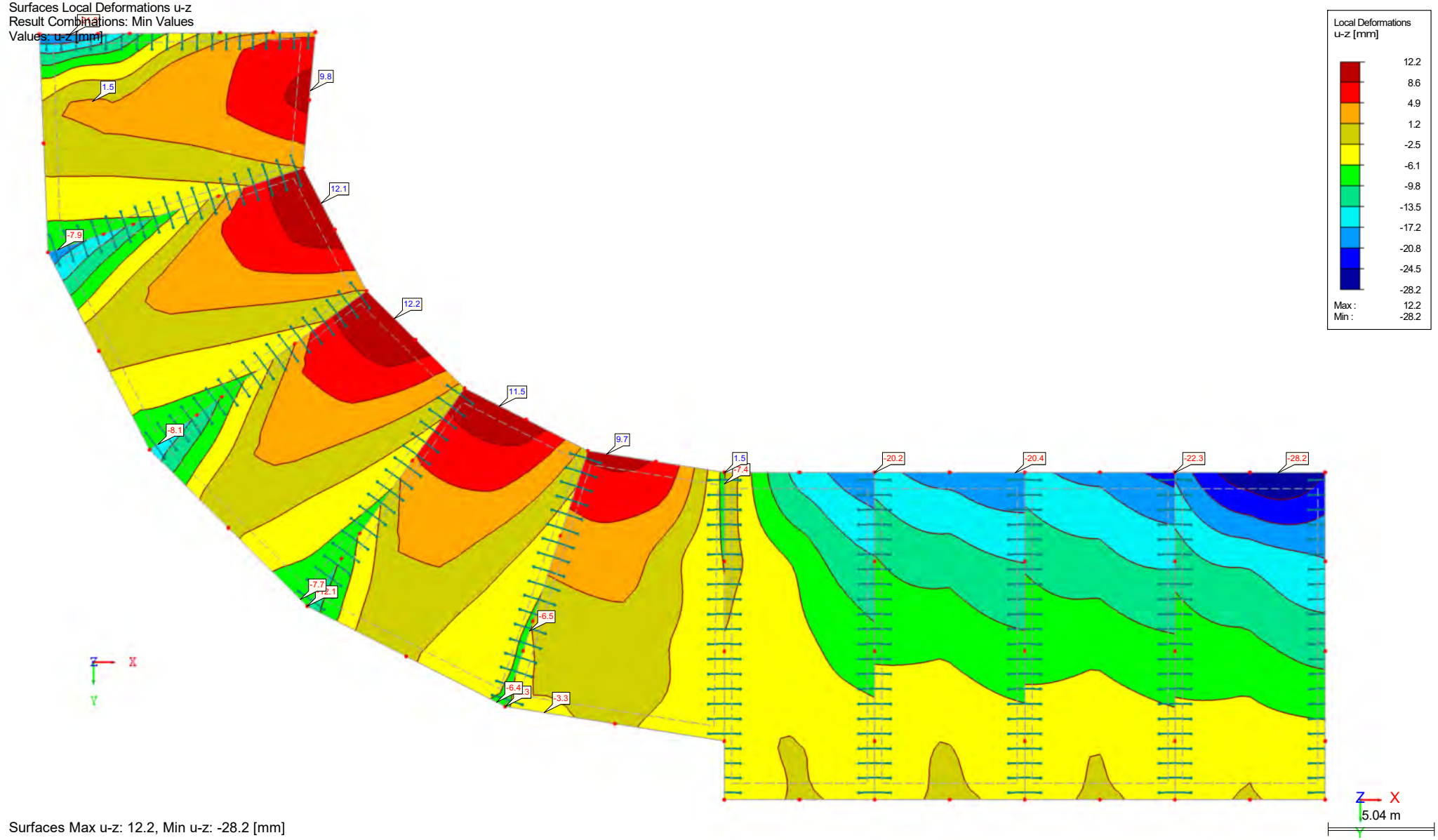


Surfaces Max u-z: 12.2, Min u-z: -28.2 [mm]

# DISPOZICIJA SIDRANJA Z DETAJLI

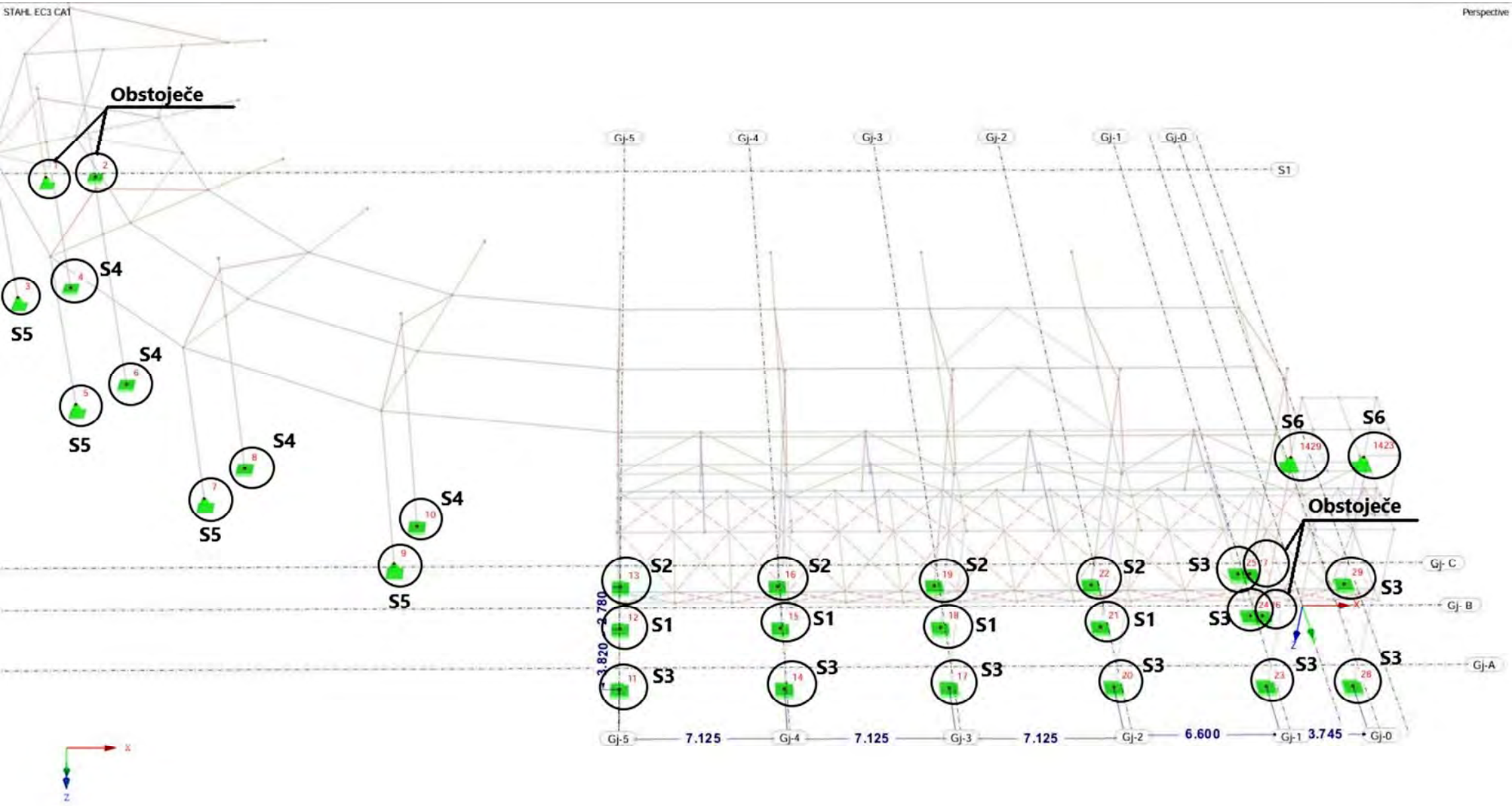

## DISPOZICIJA PODPOR

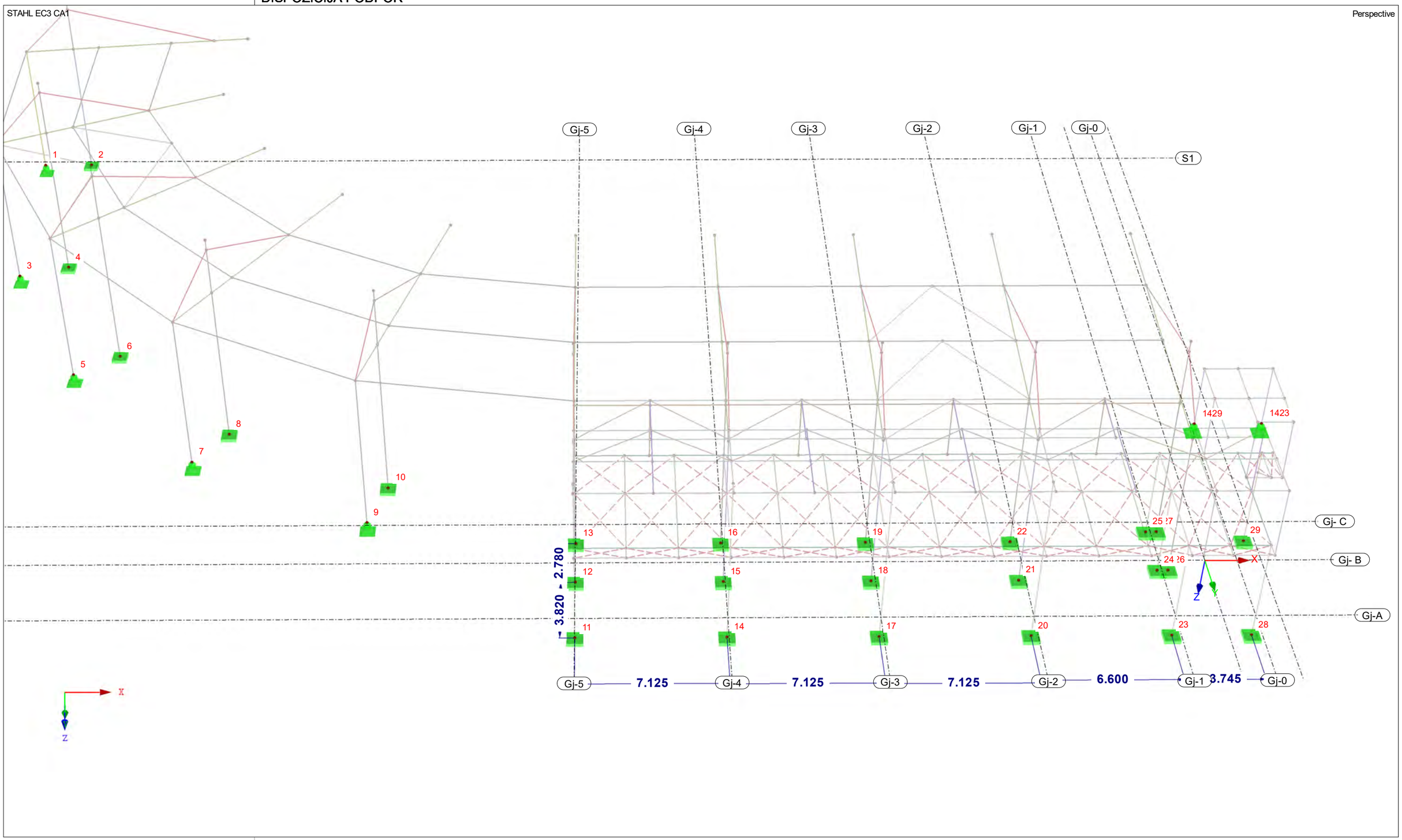

# DETAJLI NA OKVIRJU O1 Os Gj-5

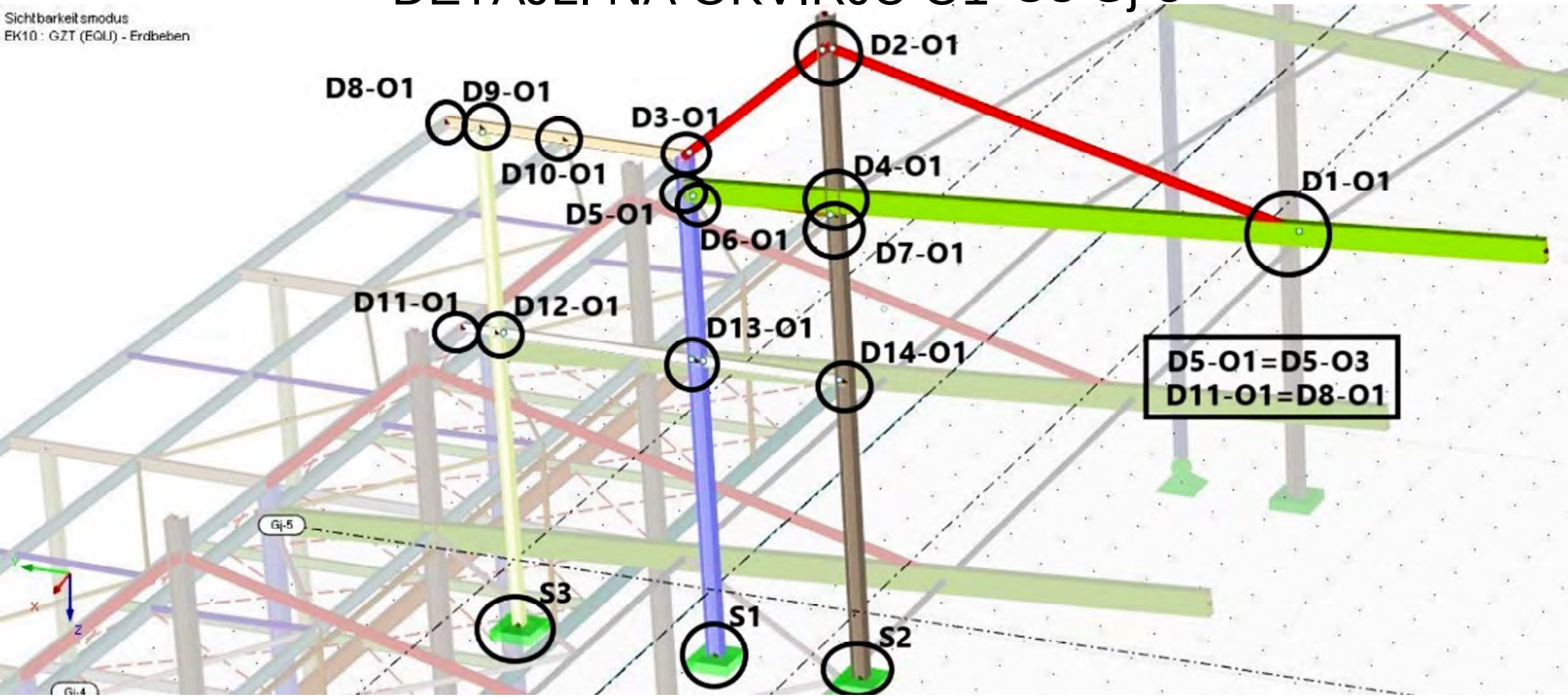

| | |
|---|---|
| **Projekt:** | **IdeaStatiCa-Stadion_Fazanerija_JK-5_BR - 1321** |
| **Projektnummer:** | **Detajl D1-O1** |
| **Autor:** | **mag. Igor Gorup dipl.ing.** |

## Projektdaten

| | |
|---|---|
| Projektname | IdeaStatiCa-Stadion_Fazanerija_JK-5_BR - 1321 |
| Projektnummer | Detajl D1-O1 |
| Autor | mag. Igor Gorup dipl.ing. |
| Beschreibung | |
| Datum | 14.06.2025 |
| Norm | EN |

## Material

| | |
|---|---|
| Stahl | Baustahl S 355, S 355 |

# Projektposition 1321

## Bemessung

| | |
|---|---|
| Name | 1321 |
| Beschreibung | |
| Berechnung | Spannung, Dehnung/ Lasten im Gleichgewicht |

### Bauteile

**Geometrie**

| Name | Querschnitt | β – Rotation [°] | Y - Rotation [°] | α - Rotation [°] | Abstand ex [mm] | Abstand ey [mm] | Abstand ez [mm] |
|---|---|---|---|---|---|---|---|
| 260 | 12 - CHS168.3/6.3 | -90,0 | 14,8 | -180,0 | 0 | 0 | 0 |
| 278 | 24 - IPE400 | 90,0 | 3,5 | -180,0 | 0 | 0 | 0 |
| 281 | 23 - RO101.6X4 | 0,0 | 0,0 | -180,0 | 0 | 0 | -100 |
| 296 | 23 - RO101.6X4 | -9,0 | 0,0 | -180,0 | 0 | 0 | -100 |

**Auflager und Kräfte**

| Name | Auflager | Kräfte in | X [mm] |
|---|---|---|---|
| 260 / ende | | Position | 0 |
| 278 / anfang | N-Vy-Vz-Mx-My-Mz | Position | 0 |
| 278 / ende | | Position | 0 |
| 281 / ende | | Position | 0 |
| 296 / ende | | Position | 0 |

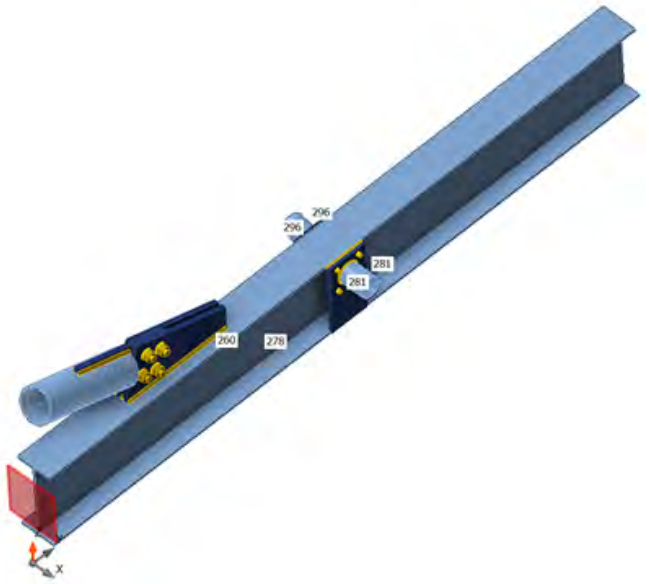


### Querschnitte

| Name | Material |
|---|---|
| 12 - CHS168.3/6.3 | Baustahl S 355 |
| 24 - IPE400 | S 355 |
| 23 - RO101.6X4 | Baustahl S 355 |

### Schrauben

| Name | Durchmesser [mm] | $f_y$ [MPa] | $f_u$ [MPa] | Bruttofläche [$mm^2$] |
|---|---|---|---|---|
| M30 8.8 | 30 | 640,0 | 800,0 | 707 |
| M12 8.8 | 12 | 640,0 | 800,0 | 113 |

## Lasteinwirkungen (Kräfte im Gleichgewicht)

| Name | Bauteil | N [kN] | Vy [kN] | Vz [kN] | Mx [kNm] | My [kNm] | Mz [kNm] |
|---|---|---|---|---|---|---|---|
| CO9(33) | 260 / Ende | 2,9 | 0,0 | 0,0 | 0,0 | 0,0 | 0,0 |
| | 278 / Anfang | -1,0 | 3,5 | 0,7 | 0,1 | 0,4 | -12,2 |
| | 278 / Ende | 1,6 | 2,9 | 0,1 | 0,0 | -0,4 | 12,2 |
| | 281 / Ende | -19,8 | 0,0 | 0,0 | 0,0 | 0,0 | 0,0 |
| | 296 / Anfang | 9,5 | 0,0 | 0,0 | 0,1 | 0,0 | 0,0 |
| CO11(34) | 260 / Ende | -36,6 | 0,0 | 1,6 | -0,1 | 0,0 | 0,0 |
| | 278 / Anfang | -34,0 | -1,6 | -7,0 | -0,1 | -14,5 | 2,9 |
| | 278 / Ende | -1,3 | -1,4 | -6,8 | 0,0 | 14,5 | -3,0 |
| | 281 / Ende | 10,1 | 0,0 | 0,4 | 0,1 | 0,0 | 0,0 |
| | 296 / Anfang | -7,1 | 0,0 | 0,5 | -0,1 | 0,0 | 0,0 |
| CO11(35) | 260 / Ende | -75,4 | 0,0 | 1,4 | -0,1 | 0,0 | 0,0 |
| | 278 / Anfang | -69,9 | 1,4 | -12,8 | -0,1 | -26,5 | -2,9 |
| | 278 / Ende | -1,0 | 1,4 | -12,6 | 0,0 | 26,5 | 2,9 |
| | 281 / Ende | -5,0 | 0,0 | 0,4 | 0,1 | 0,0 | 0,0 |
| | 296 / Anfang | 2,3 | 0,0 | 0,4 | 0,0 | 0,0 | 0,0 |
| CO11(36) | 260 / Ende | 573,0 | 0,0 | 0,6 | 0,0 | 0,0 | 0,0 |
| | 278 / Anfang | 549,8 | 1,6 | 87,8 | 0,3 | 182,2 | -3,4 |
| | 278 / Ende | -3,4 | 1,6 | 87,3 | -0,3 | -182,3 | 3,4 |
| | 281 / Ende | -10,3 | 0,0 | 0,5 | 0,0 | 0,0 | 0,0 |
| | 296 / Anfang | 7,1 | 0,0 | 0,6 | 0,2 | 0,0 | 0,0 |
| CO11(37) | 260 / Ende | 444,3 | 0,0 | 0,7 | 0,0 | 0,0 | 0,0 |
| | 278 / Anfang | 426,1 | 1,6 | 68,3 | 0,2 | 140,7 | -3,3 |
| | 278 / Ende | -2,2 | 1,6 | 67,4 | -0,2 | -140,9 | 3,3 |
| | 281 / Ende | -10,5 | 0,0 | 0,5 | 0,0 | 0,0 | 0,0 |
| | 296 / Anfang | 7,4 | 0,0 | 0,6 | 0,1 | 0,0 | 0,0 |
| CO11(38) | 260 / Ende | 573,0 | 0,0 | 0,6 | 0,0 | 0,0 | 0,0 |
| | 278 / Anfang | 549,8 | 1,6 | 87,8 | 0,2 | 182,2 | -3,5 |
| | 278 / Ende | -3,4 | 1,6 | 87,3 | -0,3 | -182,3 | 3,5 |
| | 281 / Ende | -10,3 | 0,0 | 0,5 | 0,0 | 0,0 | 0,0 |
| | 296 / Anfang | 7,0 | 0,0 | 0,6 | 0,2 | 0,0 | 0,0 |
| CO11(39) | 260 / Ende | -75,3 | 0,0 | 1,3 | -0,1 | 0,0 | 0,0 |
| | 278 / Anfang | -71,3 | -1,6 | -12,9 | -0,1 | -26,5 | 2,9 |
| | 278 / Ende | -1,0 | -1,4 | -12,6 | 0,0 | 26,5 | -3,0 |
| | 281 / Ende | 9,7 | 0,0 | 0,3 | 0,1 | 0,0 | 0,0 |
| | 296 / Anfang | -6,8 | 0,0 | 0,3 | -0,1 | 0,0 | 0,0 |
| CO11(40) | 260 / Ende | 389,2 | 0,0 | 0,7 | -0,1 | 0,0 | 0,0 |
| | 278 / Anfang | 373,5 | -1,5 | 59,7 | -0,1 | 123,0 | 2,9 |
| | 278 / Ende | -4,1 | -1,4 | 59,0 | 0,1 | -123,1 | -2,9 |
| | 281 / Ende | 8,9 | 0,0 | 0,4 | 0,0 | 0,0 | 0,0 |
| | 296 / Anfang | -6,0 | 0,0 | 0,5 | 0,1 | 0,0 | 0,0 |
| CO11(41) | 260 / Ende | -36,5 | 0,0 | 1,6 | -0,1 | 0,0 | 0,0 |
| | 278 / Anfang | -34,0 | -1,6 | -7,0 | -0,1 | -14,5 | 2,9 |
| | 278 / Ende | -1,3 | -1,4 | -6,8 | 0,0 | 14,5 | -3,0 |
| | 281 / Ende | 9,9 | 0,0 | 0,4 | 0,1 | 0,0 | 0,0 |
| | 296 / Anfang | -6,9 | 0,0 | 0,5 | -0,1 | 0,0 | 0,0 |
| CO11(42) | 260 / Ende | 396,8 | 0,0 | 0,7 | 0,0 | 0,0 | 0,0 |
| | 278 / Anfang | 381,0 | 1,6 | 60,9 | 0,1 | 125,6 | -3,3 |
| | 278 / Ende | -2,4 | 1,6 | 60,1 | -0,2 | -125,7 | 3,3 |
| | 281 / Ende | -9,7 | 0,0 | 0,5 | 0,0 | 0,0 | 0,0 |
| | 296 / Anfang | 6,5 | 0,0 | 0,6 | 0,1 | 0,0 | 0,0 |
| CO11(29) | 260 / Ende | 533,7 | 0,0 | 0,4 | 0,0 | 0,0 | 0,0 |
| | 278 / Anfang | 510,3 | -1,4 | 82,1 | -0,1 | 170,2 | 2,9 |
| | 278 / Ende | -3,2 | -1,4 | 81,5 | 0,1 | -170,3 | -3,0 |

| Name | Bauteil | N [kN] | Vy [kN] | Vz [kN] | Mx [kNm] | My [kNm] | Mz [kNm] |
|---|---|---|---|---|---|---|---|
| | 281 / Ende | 7,5 | 0,0 | 0,3 | 0,0 | 0,0 | 0,0 |
| | 296 / Anfang | -4,6 | 0,0 | 0,4 | 0,1 | 0,0 | 0,0 |
| CO11(30) | 260 / Ende | -36,6 | 0,0 | 1,6 | -0,1 | 0,0 | 0,0 |
| | 278 / Anfang | -32,6 | 1,4 | -6,9 | -0,1 | -14,5 | -3,0 |
| | 278 / Ende | -1,3 | 1,4 | -6,9 | 0,0 | 14,5 | 2,9 |
| | 281 / Ende | -5,0 | 0,0 | 0,5 | 0,1 | 0,0 | 0,0 |
| | 296 / Anfang | 2,3 | 0,0 | 0,5 | 0,0 | 0,0 | 0,0 |
| CO11(31) | 260 / Ende | 533,9 | 0,0 | 0,4 | 0,0 | 0,0 | 0,0 |
| | 278 / Anfang | 512,3 | 1,5 | 82,2 | 0,2 | 170,2 | -3,3 |
| | 278 / Ende | -3,2 | 1,6 | 81,5 | -0,2 | -170,3 | 3,3 |
| | 281 / Ende | -10,3 | 0,0 | 0,4 | 0,0 | 0,0 | 0,0 |
| | 296 / Anfang | 7,2 | 0,0 | 0,4 | 0,1 | 0,0 | 0,0 |
| CO11(32) | 260 / Ende | 103,7 | 0,0 | 1,1 | -0,1 | 0,0 | 0,0 |
| | 278 / Anfang | 102,1 | 1,4 | 15,4 | 0,0 | 30,7 | -3,1 |
| | 278 / Ende | -2,6 | 1,4 | 14,8 | 0,0 | -30,8 | 3,0 |
| | 281 / Ende | -6,0 | 0,0 | 0,5 | 0,1 | 0,0 | 0,0 |
| | 296 / Anfang | 3,1 | 0,0 | 0,5 | 0,0 | 0,0 | 0,0 |
| CO11(13) | 260 / Ende | -75,4 | 0,0 | 1,4 | -0,1 | 0,0 | 0,0 |
| | 278 / Anfang | -71,3 | -1,6 | -12,9 | -0,1 | -26,5 | 2,9 |
| | 278 / Ende | -1,0 | -1,4 | -12,6 | 0,0 | 26,5 | -3,0 |
| | 281 / Ende | 9,9 | 0,0 | 0,3 | 0,1 | 0,0 | 0,0 |
| | 296 / Anfang | -7,0 | 0,0 | 0,3 | -0,1 | 0,0 | 0,0 |
| CO11(14) | 260 / Ende | 103,7 | 0,0 | 1,1 | -0,1 | 0,0 | 0,0 |
| | 278 / Anfang | 100,5 | -1,6 | 15,3 | -0,1 | 30,8 | 2,9 |
| | 278 / Ende | -2,6 | -1,4 | 14,8 | 0,0 | -30,8 | -3,0 |
| | 281 / Ende | 9,7 | 0,0 | 0,4 | 0,1 | 0,0 | 0,0 |
| | 296 / Anfang | -6,8 | 0,0 | 0,5 | 0,0 | 0,0 | 0,0 |
| CO11(16) | 260 / Ende | 572,8 | 0,0 | 0,6 | -0,1 | 0,0 | 0,0 |
| | 278 / Anfang | 547,8 | -1,4 | 87,7 | -0,1 | 182,2 | 2,8 |
| | 278 / Ende | -3,4 | -1,3 | 87,3 | 0,1 | -182,4 | -2,8 |
| | 281 / Ende | 7,8 | 0,0 | 0,4 | 0,0 | 0,0 | 0,0 |
| | 296 / Anfang | -5,0 | 0,0 | 0,5 | 0,1 | 0,0 | 0,0 |
| CO11(18) | 260 / Ende | 501,6 | 0,0 | 0,6 | 0,0 | 0,0 | 0,0 |
| | 278 / Anfang | 480,2 | -1,5 | 76,8 | -0,1 | 159,5 | 2,8 |
| | 278 / Ende | -3,7 | -1,3 | 76,4 | 0,1 | -159,6 | -2,8 |
| | 281 / Ende | 8,2 | 0,0 | 0,4 | 0,0 | 0,0 | 0,0 |
| | 296 / Anfang | -5,4 | 0,0 | 0,5 | 0,1 | 0,0 | 0,0 |
| CO11(20) | 260 / Ende | 444,1 | 0,0 | 0,7 | -0,1 | 0,0 | 0,0 |
| | 278 / Anfang | 424,3 | -1,4 | 68,2 | -0,1 | 140,8 | 2,9 |
| | 278 / Ende | -2,2 | -1,4 | 67,4 | 0,1 | -140,9 | -2,9 |
| | 281 / Ende | 6,8 | 0,0 | 0,4 | 0,0 | 0,0 | 0,0 |
| | 296 / Anfang | -3,9 | 0,0 | 0,5 | 0,1 | 0,0 | 0,0 |
| CO11(22) | 260 / Ende | 572,8 | 0,0 | 0,6 | 0,0 | 0,0 | 0,0 |
| | 278 / Anfang | 547,8 | -1,4 | 87,7 | -0,1 | 182,2 | 2,9 |
| | 278 / Ende | -3,4 | -1,4 | 87,3 | 0,1 | -182,4 | -2,9 |
| | 281 / Ende | 7,8 | 0,0 | 0,4 | 0,0 | 0,0 | 0,0 |
| | 296 / Anfang | -4,9 | 0,0 | 0,5 | 0,1 | 0,0 | 0,0 |
| CO11(23) | 260 / Ende | 350,2 | 0,0 | 0,5 | 0,0 | 0,0 | 0,0 |
| | 278 / Anfang | 336,1 | -1,5 | 54,0 | -0,1 | 110,9 | 3,0 |
| | 278 / Ende | -3,9 | -1,4 | 53,2 | 0,1 | -111,0 | -3,0 |
| | 281 / Ende | 8,6 | 0,0 | 0,3 | 0,0 | 0,0 | 0,0 |
| | 296 / Anfang | -5,6 | 0,0 | 0,3 | 0,0 | 0,0 | 0,0 |
| CO11(7) | 260 / Ende | 138,7 | 0,0 | 1,0 | -0,1 | 0,0 | 0,0 |
| | 278 / Anfang | 135,7 | 1,4 | 20,9 | 0,0 | 42,0 | -3,1 |

| Name | Bauteil | N [kN] | Vy [kN] | Vz [kN] | Mx [kNm] | My [kNm] | Mz [kNm] |
|---|---|---|---|---|---|---|---|
| | 278 / Ende | -2,9 | 1,4 | 20,2 | -0,1 | -42,1 | 3,1 |
| | 281 / Ende | -6,3 | 0,0 | 0,5 | 0,1 | 0,0 | 0,0 |
| | 296 / Anfang | 3,4 | 0,0 | 0,5 | 0,0 | 0,0 | 0,0 |
| CO11(8) | 260 / Ende | 38,0 | 0,0 | 1,2 | -0,1 | 0,0 | 0,0 |
| | 278 / Anfang | 36,9 | -1,6 | 4,8 | -0,1 | 9,9 | 2,9 |
| | 278 / Ende | -1,4 | -1,4 | 4,8 | 0,0 | -9,9 | -3,0 |
| | 281 / Ende | 9,4 | 0,0 | 0,4 | 0,0 | 0,0 | 0,0 |
| | 296 / Anfang | -6,5 | 0,0 | 0,5 | 0,0 | 0,0 | 0,0 |
| CO11(11) | 260 / Ende | 392,3 | 0,0 | 0,5 | 0,0 | 0,0 | 0,0 |
| | 278 / Anfang | 377,2 | 1,5 | 60,5 | 0,2 | 124,8 | -3,2 |
| | 278 / Ende | -3,1 | 1,5 | 59,8 | -0,2 | -124,9 | 3,2 |
| | 281 / Ende | -9,0 | 0,0 | 0,4 | 0,0 | 0,0 | 0,0 |
| | 296 / Anfang | 5,9 | 0,0 | 0,4 | 0,1 | 0,0 | 0,0 |

### Fehlende Lasten

| Name | X [kN] | Y [kN] | Z [kN] | Mx [kNm] | My [kNm] | Mz [kNm] |
|---|---|---|---|---|---|---|
| CO9(33) | -4,0 | -3,6 | 0,0 | 0,1 | -1,0 | 0,0 |
| CO11(34) | 0,0 | -0,1 | -0,1 | -0,1 | 0,3 | 0,0 |
| CO11(35) | 0,0 | -0,1 | -0,3 | 0,0 | -0,3 | 0,0 |
| CO11(36) | -0,2 | 0,8 | 3,2 | 0,1 | -0,3 | 0,0 |
| CO11(37) | -0,1 | 0,5 | 2,1 | 0,1 | -0,3 | 0,0 |
| CO11(38) | -0,2 | 0,8 | 3,2 | 0,1 | -0,3 | 0,0 |
| CO11(39) | 0,0 | -0,1 | -0,2 | -0,1 | 0,3 | 0,0 |
| CO11(40) | 0,1 | 0,5 | 1,9 | -0,1 | 0,3 | 0,0 |
| CO11(41) | 0,0 | -0,1 | -0,1 | -0,1 | 0,3 | 0,0 |
| CO11(42) | -0,1 | 0,5 | 1,8 | 0,1 | -0,3 | 0,0 |
| CO11(29) | 0,1 | 0,7 | 2,8 | -0,1 | 0,3 | 0,0 |
| CO11(30) | 0,0 | 0,0 | -0,2 | 0,0 | -0,3 | 0,0 |
| CO11(31) | -0,2 | 0,7 | 2,7 | 0,1 | -0,3 | 0,0 |
| CO11(32) | 0,0 | 0,1 | 0,3 | 0,0 | -0,3 | 0,0 |
| CO11(13) | 0,0 | -0,1 | -0,2 | -0,1 | 0,3 | 0,0 |
| CO11(14) | 0,0 | 0,1 | 0,5 | -0,1 | 0,3 | 0,0 |
| CO11(16) | 0,1 | 0,9 | 3,3 | -0,1 | 0,3 | 0,0 |
| CO11(18) | 0,1 | 0,7 | 2,7 | -0,1 | 0,3 | 0,0 |
| CO11(20) | 0,1 | 0,6 | 2,2 | -0,1 | 0,3 | 0,0 |
| CO11(22) | 0,1 | 0,9 | 3,3 | -0,1 | 0,3 | 0,0 |
| CO11(23) | 0,1 | 0,4 | 1,4 | -0,1 | 0,3 | 0,0 |
| CO11(7) | 0,0 | 0,1 | 0,5 | 0,1 | -0,3 | 0,0 |
| CO11(8) | 0,0 | 0,0 | 0,2 | -0,1 | 0,3 | 0,0 |
| CO11(11) | -0,1 | 0,4 | 1,6 | 0,1 | -0,3 | 0,0 |

## Nachweis

### Übersicht

| Name | Wert | Nachweisstatus |
|---|---|---|
| Berechnung | 100,0% | OK |
| Platten | 0,4 < 5,0% | OK |
| Lokale Verformung | 0,1 < 3% | OK |
| Schrauben | 48,1 < 100% | OK |
| Schweißnähte | 98,1 < 100% | OK |
| Beulen | Nicht berechnet | |

## Platten

| Name | Material | $t_p$ [mm] | Lasten | $\sigma_{Ed}$ [MPa] | $\varepsilon_{Pl}$ [%] | $\sigma_{c,Ed}$ [MPa] | Status |
|---|---|---|---|---|---|---|---|
| 260 | Baustahl S 355 | 6,3 | CO11(38) | 355,8 | 0,4 | 0,0 | OK |
| 278-bfl 1 | S 355 | 13,5 | CO11(38) | 353,7 | 0,0 | 0,0 | OK |
| 278-tfl 1 | S 355 | 13,5 | CO11(38) | 211,4 | 0,0 | 0,0 | OK |
| 278-w 1 | S 355 | 8,6 | CO11(38) | 277,5 | 0,0 | 0,0 | OK |
| 281 | Baustahl S 355 | 4,0 | CO9(33) | 65,7 | 0,0 | 0,0 | OK |
| 296 | Baustahl S 355 | 4,0 | CO9(33) | 31,6 | 0,0 | 0,0 | OK |
| Verbindungsblech1a | S 355 | 20,0 | CO11(22) | 180,8 | 0,0 | 7,0 | OK |
| Verbindungsblech1b | S 355 | 20,0 | CO11(38) | 183,3 | 0,0 | 7,4 | OK |
| Verbindungsblech1c | S 355 | 20,0 | CO11(38) | 271,7 | 0,0 | 15,6 | OK |
| Verschobene Stirnplatte1a | S 355 | 10,0 | CO9(33) | 186,5 | 0,0 | 4,6 | OK |
| Verschobene Stirnplatte1b | S 355 | 10,0 | CO9(33) | 121,8 | 0,0 | 15,4 | OK |
| Verschobene Stirnplatte2a | S 355 | 10,0 | CO11(36) | 144,3 | 0,0 | 2,3 | OK |
| Verschobene Stirnplatte2b | S 355 | 10,0 | CO9(33) | 58,6 | 0,0 | 6,5 | OK |

**Bemessungsdaten**

| Material | $f_y$ [MPa] | $\varepsilon_{lim}$ [%] |
|---|---|---|
| Baustahl S 355 | 355,0 | 5,0 |
| S 355 | 355,0 | 5,0 |

**Erläuterung von Symbolen**

| | |
|---|---|
| $t_p$ | Plattendicke |
| $\sigma_{Ed}$ | Vergleichsspannung |
| $\varepsilon_{Pl}$ | Plastische Dehnung |
| $\sigma_{c,Ed}$ | Kontaktspannung |
| $f_y$ | Streckgrenze |
| $\varepsilon_{lim}$ | Grenzwert plastische Dehnung |

## Lokale Verformung

| Name | $d_0$ [mm] | Lasten | $\delta$ [mm] | $\delta_{lim}$ [mm] | $\delta/d_0$ [%] | Nachweisstatus |
|---|---|---|---|---|---|---|
| 260 | 168 | CO11(38) | 0 | 5 | 0,1 | OK |
| 281 | 102 | CO11(11) | 0 | 3 | 0,0 | OK |
| 296 | 102 | CO11(11) | 0 | 3 | 0,0 | OK |

**Erläuterung von Symbolen**

| | |
|---|---|
| $d_0$ | Querschnittsgröße |
| $\delta$ | Lokale Verformung im Querschnitt |
| $\delta_{lim}$ | Zulässige Verformung |

*Gesamt, CO11(38)*

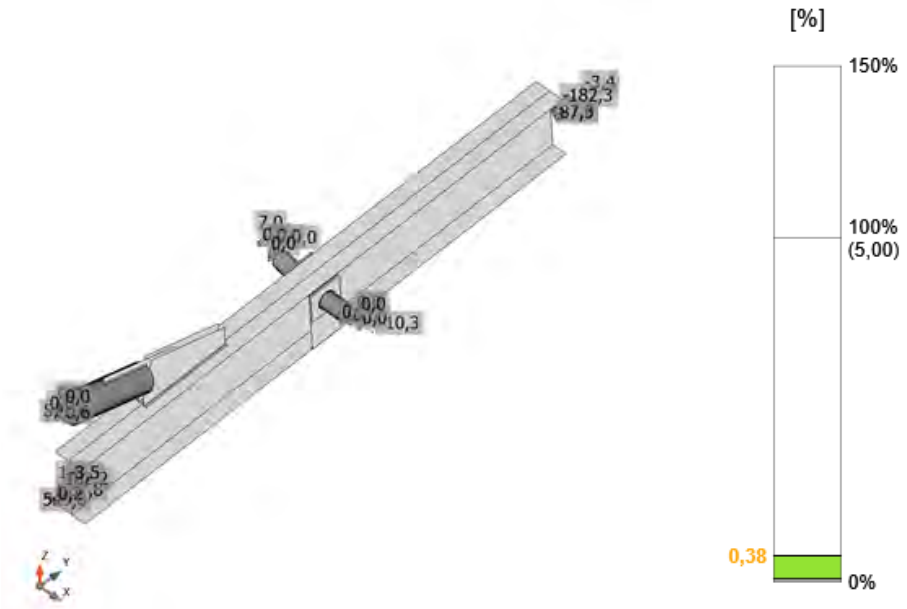


*Dehnung, CO11(38)*

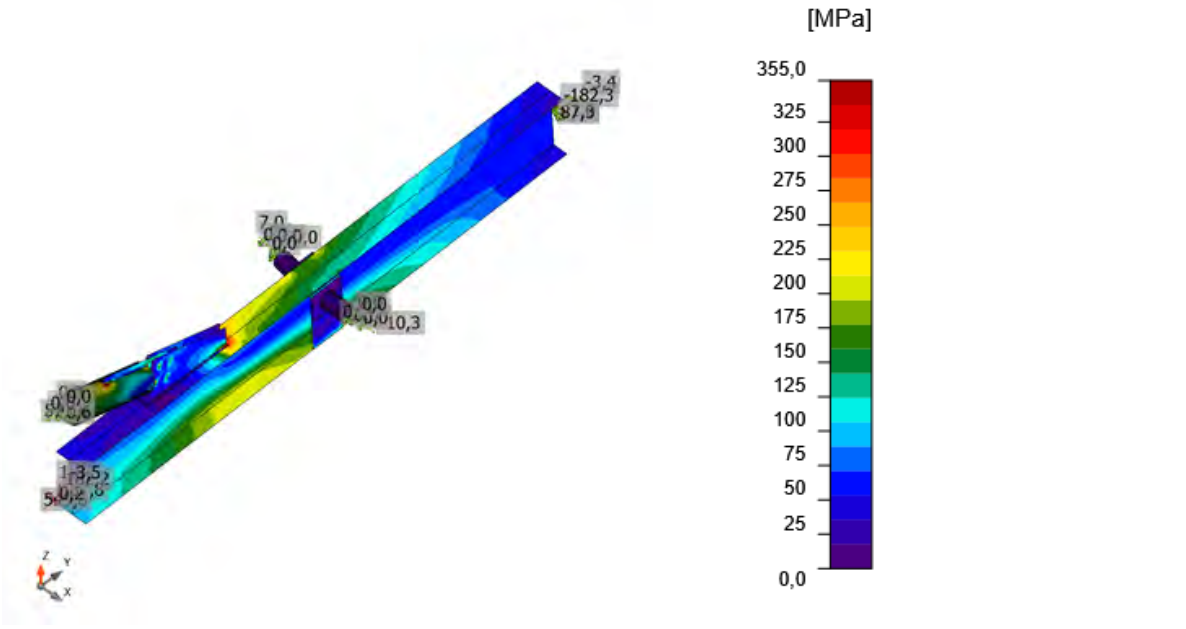


*Vergleichsspannung, CO11(38)*

## Schrauben

| Form | Position | Klasse | Lasten | $F_{t,Ed}$ [kN] | $F_{v,Ed}$ [kN] | $F_{b,Rd}$ [kN] | $Ut_t$ [%] | $Ut_s$ [%] | $Ut_{ts}$ [%] | Konstruktionsregeln | Status |
|---|---|---|---|---|---|---|---|---|---|---|---|
| 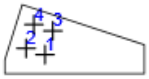 | B1 | M30 8.8 - 1 | CO11(36) | 1,4 | 72,1 | 297,0 | 0,4 | 48,1 | 33,8 | OK | OK |
| | B2 | M30 8.8 - 1 | CO11(36) | 15,2 | 74,5 | 328,2 | 4,7 | 45,0 | 38,0 | OK | OK |
| | B3 | M30 8.8 - 1 | CO11(36) | 1,2 | 71,1 | 297,0 | 0,4 | 47,0 | 33,3 | OK | OK |
| | B4 | M30 8.8 - 1 | CO11(36) | 17,2 | 72,9 | 328,2 | 5,3 | 43,6 | 37,7 | OK | OK |
| 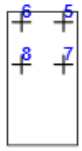 | B5 | M12 8.8 - 2 | CO11(34) | 4,3 | 0,6 | 90,5 | 8,9 | 1,9 | 8,3 | OK | OK |
| | B6 | M12 8.8 - 2 | CO11(34) | 3,8 | 0,4 | 90,7 | 7,8 | 1,2 | 6,7 | OK | OK |
| | B7 | M12 8.8 - 2 | CO11(34) | 3,7 | 0,2 | 108,4 | 7,7 | 0,6 | 6,1 | OK | OK |
| | B8 | M12 8.8 - 2 | CO11(34) | 4,1 | 0,4 | 90,5 | 8,5 | 1,4 | 7,4 | OK | OK |
| 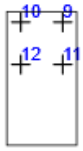 | B9 | M12 8.8 - 2 | CO11(34) | 2,7 | 0,4 | 97,5 | 5,6 | 1,3 | 5,3 | OK | OK |
| | B10 | M12 8.8 - 2 | CO11(34) | 3,2 | 0,6 | 91,0 | 6,5 | 1,9 | 6,5 | OK | OK |
| | B11 | M12 8.8 - 2 | CO11(34) | 3,1 | 0,4 | 93,7 | 6,3 | 1,2 | 5,7 | OK | OK |
| | B12 | M12 8.8 - 2 | CO11(34) | 2,6 | 0,1 | 117,6 | 5,4 | 0,4 | 4,2 | OK | OK |

**Bemessungsdaten**

| Klasse | $F_{t,Rd}$ [kN] | $B_{p,Rd}$ [kN] | $F_{v,Rd}$ [kN] |
|---|---|---|---|
| M30 8.8 - 1 | 323,1 | 715,6 | 215,4 |
| M12 8.8 - 2 | 48,6 | 140,5 | 32,4 |

**Erläuterung von Symbolen**

| | |
|---|---|
| $F_{t,Ed}$ | Zugkraft |
| $F_{v,Ed}$ | Resultierende der Schraubenscherkräfte Vy und Vz in Scherebenen |
| $F_{b,Rd}$ | Lochleibungstragfähigkeit der Platte nach EN 1993-1-8 Tab. 3.4 |
| $Ut_t$ | Ausnutzung unter Zug |
| $Ut_s$ | Ausnutzung unter Schub |
| $Ut_{ts}$ | Interaktion von Zug und Schub EN_1993-1-8 Tabelle 3.4 |
| $F_{t,Rd}$ | Zugtragfähigkeit der Schraube nach EN 1993-1-8 Tabelle 3.4 |
| $B_{p,Rd}$ | Durchstanztragfähigkeit nach EN 1993-1-8 Tabelle 3.4 |
| $F_{v,Rd}$ | Schertragfähigkeit der Schraube nach EN 1993-1-8 Tabelle 3.4 |

## Schweißnähte

| Position | Kante | $T_w$ [mm] | L [mm] | Lasten | $\sigma_{w,Ed}$ [MPa] | $\varepsilon_{Pl}$ [%] | $\sigma_{\perp}$ [MPa] | $\tau_{\perp}$ [MPa] | $\tau_{\parallel}$ [MPa] | Ut [%] | $Ut_c$ [%] | Konstruktionsregeln | Status |
|---|---|---|---|---|---|---|---|---|---|---|---|---|---|
| 278-bfl 1 | Verbindungsblech1a | ◢ 8,0 ◣ | 559 | CO11(38) | 426,9 | 0,0 | 121,8 | 123,4 | -201,5 | 98,0 | 49,2 | OK | OK |
| | | ◢ 8,0 ◣ | 559 | CO11(38) | 426,9 | 0,0 | 119,9 | -118,2 | 204,9 | 98,0 | 50,5 | OK | OK |
| 278-bfl 1 | Verbindungsblech1b | ◢ 8,0 ◣ | 559 | CO11(22) | 426,9 | 0,0 | 116,6 | 117,3 | -206,0 | 98,0 | 50,2 | OK | OK |
| | | ◢ 8,0 ◣ | 559 | CO11(22) | 426,9 | 0,0 | 123,3 | -122,6 | 201,6 | 98,0 | 49,1 | OK | OK |
| Verbindungsblech1c | 260-arc 15 | ◢ 8,0 | 298 | CO11(38) | 427,1 | 0,1 | -71,2 | 0,1 | 243,1 | 98,1 | 66,6 | OK | OK |
| Verbindungsblech1c | 260-arc 18 | ◢ 8,0 | 298 | CO11(36) | 427,1 | 0,1 | -71,4 | 0,2 | -243,1 | 98,1 | 57,0 | OK | OK |
| Verbindungsblech1c | 260-arc 47 | ◢ 8,0 | 298 | CO11(38) | 427,0 | 0,1 | -74,7 | 1,6 | 242,7 | 98,0 | 65,8 | OK | OK |
| Verbindungsblech1c | 260-arc 50 | ◢ 8,0 | 298 | CO11(36) | 427,0 | 0,1 | -74,9 | 1,8 | -242,7 | 98,0 | 55,9 | OK | OK |
| Verschobene Stirnplatte1a | 278-tfl 1 | ◢ 4,0 ◣ | 199 | CO11(16) | 128,0 | 0,0 | -41,7 | 36,3 | 59,7 | 29,4 | 21,0 | OK | OK |
| | | ◢ 4,0 ◣ | 199 | CO11(38) | 167,7 | 0,0 | -47,0 | 31,7 | -87,4 | 38,5 | 27,1 | OK | OK |
| Verschobene Stirnplatte1a | 278-bfl 1 | ◢ 4,0 ◣ | 199 | CO9(33) | 201,3 | 0,0 | -123,9 | -56,0 | -72,5 | 46,2 | 30,7 | OK | OK |
| | | ◢ 4,0 ◣ | 199 | CO9(33) | 129,3 | 0,0 | 93,7 | 51,4 | 2,4 | 29,7 | 23,2 | OK | OK |
| Verschobene Stirnplatte2a | 278-tfl 1 | ◢ 4,0 ◣ | 199 | CO11(22) | 156,3 | 0,0 | -38,2 | 30,9 | 81,9 | 35,9 | 23,4 | OK | OK |
| | | ◢ 4,0 ◣ | 199 | CO11(36) | 209,6 | 0,0 | -41,0 | 24,3 | -116,1 | 48,1 | 30,2 | OK | OK |
| Verschobene Stirnplatte2a | 278-bfl 1 | ◢ 4,0 ◣ | 199 | CO11(38) | 163,6 | 0,0 | -18,8 | -0,7 | -93,8 | 37,6 | 29,3 | OK | OK |
| | | ◢ 4,0 ◣ | 199 | CO11(36) | 134,4 | 0,0 | 36,6 | 50,6 | -54,9 | 30,9 | 23,1 | OK | OK |
| Verschobene Stirnplatte1b | 281 | ◢ 4,0 | 306 | CO9(33) | 70,4 | 0,0 | -44,0 | 30,5 | -8,8 | 16,2 | 9,7 | OK | OK |
| Verschobene Stirnplatte2b | 296 | ◢ 4,0 | 308 | CO9(33) | 34,6 | 0,0 | -22,5 | 14,9 | 2,9 | 8,0 | 6,7 | OK | OK |

**Bemessungsdaten**

| Material | $f_u$ [MPa] | $\beta_w$ [-] | $\sigma_{w,Rd}$ [MPa] | 0.9 σ [MPa] |
|---|---|---|---|---|
| S 355 | 490,0 | 0,90 | 435,6 | 352,8 |

**Erläuterung von Symbolen**

| | |
|---|---|
| $T_w$ | Nahtdicke a |
| L | Länge |
| $\sigma_{w,Ed}$ | Vergleichsspannung |
| $\varepsilon_{Pl}$ | Dehnung |
| $\sigma_{\perp}$ | Senkrechte Spannung |
| $\tau_{\perp}$ | Scherspannung senkrecht zur Schweißnahtachse |
| $\tau_{\parallel}$ | Scherspannung parallel zur Schweißnahtachse |
| Ut | Ausnutzung |
| $Ut_c$ | Schätzung der Schweißnahtkapazität |
| ◢ | Kehlnaht |
| $f_u$ | Grenzfestigkeit der Schweißnaht |
| $\beta_w$ | Korrelationsfaktor nach EN 1993-1-8 Tab. 4.1 |
| $\sigma_{w,Rd}$ | Tragfähigkeit der Schweißnaht |
| 0.9 σ | Senkrechter Spannungswiderstand - 0.9*fu / γM2 |

### Beulen

**Die Beulanalyse wurde nicht berechnet.**

## Normeinstellungen

| Position | Wert | Einheit | Bezug |
|---|---|---|---|
| Sicherheitsfaktor $\gamma_{M0}$ | 1,00 | - | EN 1993-1-1 – 6.1 |
| Sicherheitsfaktor $\gamma_{M1}$ | 1,00 | - | EN 1993-1-1 – 6.1 |
| Sicherheitsfaktor $\gamma_{M2}$ | 1,25 | - | EN 1993-1-1 – 6.1 |
| Sicherheitsfaktor $\gamma_{M3}$ | 1,25 | - | EN 1993-1-8 – Table 2.1 |
| Sicherheitsfaktor $\gamma_C$ | 1,50 | - | EN 1992-1-1 – 2.4.2.4 |
| Sicherheitsfaktor $\gamma_{Inst}$ | 1,20 | - | EN 1992-4 – Table 4.1 |
| Verbindungskoeffizient βj | 0,67 | - | EN 1993-1-8 – 6.2.5(7) |
| Wirksame Fläche - Einfluss der Netzgröße | 0,10 | - | |
| Reibungsbeiwert - Beton | 0,25 | - | EN 1993-1-8 |
| Reibungskoeffizient bei gleitfesten Verbindungen | 0,30 | - | EN 1993-1-8 – Table 3.7 |
| Plastische Dehnung - Grenzwert | 0,05 | - | EN 1993-1-5 |
| Konstruktionsregeln | Ja | | |
| Distance between bolts [d0] | 2,20 | - | EN 1993-1-8 – Table 3.3 |
| Distance between bolts and edge [d0] | 1,20 | - | EN 1993-1-8 – Table 3.3 |
| Nachweis der Tragfähigkeit bei Betonausbruch | Beide | | |
| Berechnetes αb für Lochleibungsnachweis anwenden. | Ja | | EN 1993-1-8 – Table 3.4 |
| Gerissener Beton | Ja | | EN 1992-4 |
| Überprüfen der lokalen Verformung | Ja | | |
| Lokale Verformung - Grenzwert | 0,03 | - | CIDECT DG 1, 3 – 1.1 |
| Geometrische Nichtlinearität (GMNA) | Ja | | Analyse mit großen Verformungen für Verbindungen mit Hohlprofilen |
| Ausgesteiftes System | Nein | | EN 1993-1-8 – 5.2.2.5 |

## Projektdaten

| | |
|---|---|
| Projektname | IdeaStatiCa-Stadion_Fazanerija_JK-5_BR - 1322 |
| Projektnummer | Detajl D2-O1 |
| Autor | mag. Igor Gorup dipl. ing. |
| Beschreibung | |
| Datum | 14.06.2025 |
| Norm | EN |

## Material

| | |
|---|---|
| Stahl | Baustahl S 355, S 355 |

# Projektposition 1322

## Bemessung

| | |
|---|---|
| Name | 1322 |
| Beschreibung | |
| Berechnung | Spannung, Dehnung/ Lasten im Gleichgewicht |

### Bauteile

#### Geometrie

| Name | Querschnitt | β – Rotation [°] | Y - Rotation [°] | α - Rotation [°] | Abstand ex [mm] | Abstand ey [mm] | Abstand ez [mm] |
|---|---|---|---|---|---|---|---|
| 260 | 12 - CHS168.3/6.3 | -90,0 | 14,8 | -180,0 | 0 | 0 | 0 |
| 64 | 265 - HEB260 | 0,0 | 90,0 | -90,0 | 0 | 0 | 0 |
| 261 | 12 - CHS168.3/6.3 | -90,0 | -38,0 | -180,0 | 0 | 0 | 0 |

#### Auflager und Kräfte

| Name | Auflager | Kräfte in | X [mm] |
|---|---|---|---|
| 260 / ende | Mx-My-Mz | Schrauben | 0 |
| 64 / anfang | N-Vy-Vz-Mx-My-Mz | Position | 0 |
| 64 / ende | | Position | 0 |
| 261 / ende | Mx-My-Mz | Schrauben | 0 |

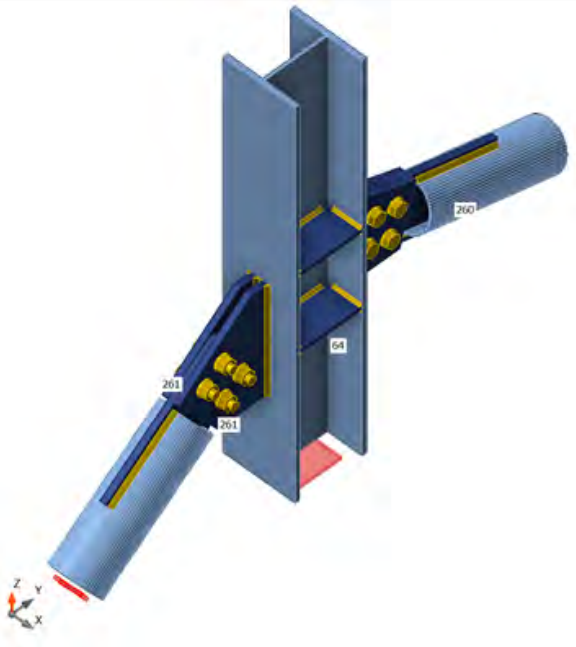


### Querschnitte

| Name | Material |
|---|---|
| 12 - CHS168.3/6.3 | Baustahl S 355 |
| 265 - HEB260 | Baustahl S 355 |

### Schrauben

| Name | Durchmesser [mm] | $f_y$ [MPa] | $f_u$ [MPa] | Bruttofläche [$mm^2$] |
|---|---|---|---|---|
| M30 8.8 | 30 | 640,0 | 800,0 | 707 |

## Lasteinwirkungen (Kräfte im Gleichgewicht)

| Name | Bauteil | N [kN] | Vy [kN] | Vz [kN] | Mx [kNm] | My [kNm] | Mz [kNm] |
|---|---|---|---|---|---|---|---|
| CO11(19) | 260 / Anfang | 74,8 | 0,0 | 1,3 | 0,0 | 0,0 | 0,0 |
| | 64 / Anfang | -72,7 | -0,1 | 1,5 | 0,1 | 0,0 | 0,2 |
| | 64 / Ende | -0,5 | 0,0 | 0,0 | 0,0 | 0,0 | 0,0 |
| | 261 / Ende | -90,0 | 0,0 | 0,3 | 0,0 | 0,0 | 0,0 |
| CO11(20) | 260 / Anfang | -573,8 | 0,0 | 0,6 | 0,0 | 0,0 | 0,0 |
| | 64 / Anfang | 568,2 | -0,1 | -24,9 | 0,0 | 0,0 | 0,1 |
| | 64 / Ende | -0,7 | 0,0 | 0,0 | 0,0 | 0,0 | 0,0 |
| | 261 / Ende | 674,6 | 0,0 | 0,3 | 0,0 | 0,0 | 0,0 |
| CO11(21) | 260 / Anfang | 74,8 | 0,0 | 1,3 | 0,0 | 0,0 | 0,0 |
| | 64 / Anfang | -72,6 | -0,1 | 1,6 | 0,0 | 0,0 | 0,2 |
| | 64 / Ende | -0,5 | 0,0 | 0,0 | 0,0 | 0,0 | 0,0 |
| | 261 / Ende | -89,9 | 0,0 | 0,3 | 0,0 | 0,0 | 0,0 |
| CO11(22) | 260 / Anfang | -432,1 | 0,0 | 0,7 | 0,0 | 0,0 | 0,0 |
| | 64 / Anfang | 427,4 | -0,1 | -19,0 | 0,0 | 0,0 | 0,1 |
| | 64 / Ende | -0,7 | 0,0 | 0,0 | 0,0 | 0,0 | 0,0 |
| | 261 / Ende | 507,4 | 0,0 | 0,4 | 0,0 | 0,0 | 0,0 |
| CO11(23) | 260 / Anfang | 35,8 | 0,0 | 1,6 | 0,0 | 0,0 | 0,0 |
| | 64 / Anfang | -34,0 | 0,0 | -0,2 | 0,1 | 0,0 | 0,2 |
| | 64 / Ende | -0,7 | 0,0 | 0,0 | 0,0 | 0,0 | 0,0 |
| | 261 / Ende | -44,3 | 0,0 | 0,5 | 0,0 | 0,0 | 0,0 |
| CO11(24) | 260 / Anfang | -229,9 | 0,0 | 0,6 | 0,0 | 0,0 | 0,0 |
| | 64 / Anfang | 228,0 | 0,1 | -9,0 | 0,0 | 0,0 | 0,1 |
| | 64 / Ende | -0,5 | 0,0 | 0,0 | 0,0 | 0,0 | 0,0 |
| | 261 / Ende | 270,9 | 0,0 | 0,3 | 0,0 | 0,0 | 0,0 |
| CO11(25) | 260 / Anfang | -214,2 | 0,0 | 0,9 | 0,0 | 0,0 | 0,0 |
| | 64 / Anfang | 211,6 | 0,0 | -10,3 | 0,1 | 0,0 | 0,2 |
| | 64 / Ende | -0,7 | 0,0 | 0,0 | 0,0 | 0,0 | 0,0 |
| | 261 / Ende | 250,0 | 0,0 | 0,4 | 0,0 | 0,0 | 0,0 |
| CO11(26) | 260 / Anfang | -573,8 | 0,0 | 0,6 | 0,0 | 0,0 | 0,0 |
| | 64 / Anfang | 568,2 | -0,1 | -25,0 | 0,1 | 0,0 | 0,1 |
| | 64 / Ende | -0,7 | 0,0 | 0,0 | 0,0 | 0,0 | 0,0 |
| | 261 / Ende | 674,6 | 0,0 | 0,3 | 0,0 | 0,0 | 0,0 |
| CO11(27) | 260 / Anfang | 35,8 | 0,0 | 1,6 | 0,0 | 0,0 | 0,0 |
| | 64 / Anfang | -34,0 | 0,0 | -0,2 | 0,1 | 0,0 | 0,2 |
| | 64 / Ende | -0,7 | 0,0 | 0,0 | 0,0 | 0,0 | 0,0 |
| | 261 / Ende | -44,2 | 0,0 | 0,5 | 0,0 | 0,0 | 0,0 |
| CO9(14) | 260 / Anfang | -2,9 | 0,0 | 0,0 | 0,0 | 0,0 | 0,0 |
| | 64 / Anfang | 5,6 | -0,5 | 2,7 | 0,0 | 0,0 | 0,0 |
| | 64 / Ende | 0,0 | 0,0 | 0,1 | 0,0 | 0,0 | 0,0 |
| | 261 / Ende | 7,8 | 0,0 | 0,0 | 0,0 | 0,0 | 0,0 |
| CO11(15) | 260 / Anfang | -573,5 | 0,0 | 0,6 | 0,0 | 0,0 | 0,0 |
| | 64 / Anfang | 567,5 | 0,3 | -25,4 | 0,0 | 0,0 | 0,1 |
| | 64 / Ende | -0,7 | 0,0 | 0,0 | 0,0 | 0,0 | 0,0 |
| | 261 / Ende | 673,7 | 0,0 | 0,3 | 0,0 | 0,0 | 0,0 |
| CO11(17) | 260 / Anfang | 35,9 | 0,0 | 1,6 | 0,0 | 0,0 | 0,0 |
| | 64 / Anfang | -33,7 | 0,0 | 0,2 | 0,1 | 0,0 | 0,2 |
| | 64 / Ende | -0,7 | 0,0 | 0,0 | 0,0 | 0,0 | 0,0 |
| | 261 / Ende | -43,8 | 0,0 | 0,5 | 0,0 | 0,0 | 0,0 |
| CO11(1) | 260 / Anfang | 74,9 | 0,0 | 1,3 | 0,0 | 0,0 | 0,0 |
| | 64 / Anfang | -72,4 | 0,0 | 1,9 | 0,1 | 0,0 | 0,2 |
| | 64 / Ende | -0,5 | 0,0 | 0,0 | 0,0 | 0,0 | 0,0 |
| | 261 / Ende | -89,5 | 0,0 | 0,3 | 0,0 | 0,0 | 0,0 |

| Name | Bauteil | N [kN] | Vy [kN] | Vz [kN] | Mx [kNm] | My [kNm] | Mz [kNm] |
|---|---|---|---|---|---|---|---|
| CO11(7) | 260 / Anfang | -139,4 | 0,0 | 1,0 | 0,0 | 0,0 | 0,0 |
| | 64 / Anfang | 137,7 | 0,0 | -7,6 | 0,1 | 0,0 | 0,2 |
| | 64 / Ende | -0,7 | 0,0 | 0,0 | 0,0 | 0,0 | 0,0 |
| | 261 / Ende | 161,5 | 0,0 | 0,4 | 0,0 | 0,0 | 0,0 |
| CO11(8) | 260 / Anfang | -38,7 | 0,0 | 1,2 | 0,0 | 0,0 | 0,0 |
| | 64 / Anfang | 39,3 | 0,0 | -2,9 | 0,1 | 0,0 | 0,2 |
| | 64 / Ende | -0,7 | 0,0 | 0,0 | 0,0 | 0,0 | 0,0 |
| | 261 / Ende | 43,8 | 0,0 | 0,4 | 0,0 | 0,0 | 0,0 |
| CO11(10) | 260 / Anfang | -444,8 | 0,0 | 0,7 | 0,0 | 0,0 | 0,0 |
| | 64 / Anfang | 440,6 | 0,3 | -18,9 | 0,1 | 0,0 | 0,1 |
| | 64 / Ende | -0,7 | 0,0 | 0,0 | 0,0 | 0,0 | 0,0 |
| | 261 / Ende | 523,3 | 0,0 | 0,4 | 0,0 | 0,0 | 0,0 |
| CO11(11) | 260 / Anfang | -392,9 | 0,0 | 0,5 | 0,0 | 0,0 | 0,0 |
| | 64 / Anfang | 388,0 | -0,1 | -17,2 | 0,0 | 0,0 | 0,0 |
| | 64 / Ende | -0,5 | 0,0 | 0,0 | 0,0 | 0,0 | 0,0 |
| | 261 / Ende | 461,3 | 0,0 | 0,3 | 0,0 | 0,0 | 0,0 |

### Fehlende Lasten

| Name | X [kN] | Y [kN] | Z [kN] | Mx [kNm] | My [kNm] | Mz [kNm] |
|---|---|---|---|---|---|---|
| CO11(19) | -0,1 | -0,1 | -0,2 | 0,0 | 0,2 | 0,1 |
| CO11(20) | -0,1 | -1,4 | 4,5 | 0,0 | 0,1 | 0,0 |
| CO11(21) | -0,1 | -0,1 | -0,2 | 0,0 | 0,2 | 0,0 |
| CO11(22) | -0,1 | -0,7 | 2,8 | 0,0 | 0,1 | 0,0 |
| CO11(23) | 0,0 | 0,0 | -0,2 | 0,0 | 0,2 | 0,1 |
| CO11(24) | 0,1 | -0,2 | 1,0 | 0,0 | 0,1 | 0,0 |
| CO11(25) | 0,0 | -0,1 | 1,0 | 0,0 | 0,2 | 0,1 |
| CO11(26) | -0,1 | -1,4 | 4,5 | 0,0 | 0,1 | 0,1 |
| CO11(27) | 0,0 | 0,0 | -0,2 | 0,0 | 0,2 | 0,1 |
| CO9(14) | -0,5 | -0,6 | 0,0 | 0,0 | 0,0 | 0,0 |
| CO11(15) | 0,3 | -1,4 | 4,5 | 0,0 | 0,1 | 0,0 |
| CO11(17) | 0,0 | 0,0 | -0,2 | 0,0 | 0,2 | 0,1 |
| CO11(1) | 0,0 | -0,1 | -0,2 | 0,0 | 0,2 | 0,1 |
| CO11(7) | 0,0 | 0,0 | 0,6 | 0,0 | 0,2 | 0,1 |
| CO11(8) | 0,0 | 0,0 | 0,2 | 0,0 | 0,2 | 0,1 |
| CO11(10) | 0,3 | -0,8 | 3,0 | 0,0 | 0,1 | 0,0 |
| CO11(11) | -0,1 | -0,6 | 2,2 | 0,0 | 0,0 | 0,0 |

## Nachweis

### Übersicht

| Name | Wert | Nachweisstatus |
|---|---|---|
| Berechnung | 100,0% | OK |
| Platten | 0,7 < 5,0% | OK |
| Lokale Verformung | 0,2 < 3% | OK |
| Schrauben | 57,4 < 100% | OK |
| Schweißnähte | 98,1 < 100% | OK |
| Beulen | Nicht berechnet | |

## Platten

| Name | Material | $t_p$ [mm] | Lasten | $\sigma_{Ed}$ [MPa] | $\varepsilon_{Pl}$ [%] | $\sigma_{c,Ed}$ [MPa] | Status |
|---|---|---|---|---|---|---|---|
| 260 | Baustahl S 355 | 6,3 | CO11(15) | 356,0 | 0,5 | 0,0 | OK |
| 64-bfl 1 | Baustahl S 355 | 17,5 | CO11(20) | 136,5 | 0,0 | 0,0 | OK |
| 64-tfl 1 | Baustahl S 355 | 17,5 | CO11(20) | 104,7 | 0,0 | 0,0 | OK |
| 64-w 1 | Baustahl S 355 | 10,0 | CO11(20) | 253,6 | 0,0 | 0,0 | OK |
| 261 | Baustahl S 355 | 6,3 | CO11(20) | 356,5 | 0,7 | 0,0 | OK |
| Verbindungsblech1a | S 355 | 20,0 | CO11(20) | 137,2 | 0,0 | 12,8 | OK |
| Verbindungsblech1b | S 355 | 20,0 | CO11(20) | 137,2 | 0,0 | 12,8 | OK |
| Verbindungsblech1c | S 355 | 20,0 | CO11(15) | 282,5 | 0,0 | 10,1 | OK |
| Verbindungsblech2a | S 355 | 20,0 | CO11(20) | 162,3 | 0,0 | 9,5 | OK |
| Verbindungsblech2b | S 355 | 20,0 | CO11(20) | 162,3 | 0,0 | 9,5 | OK |
| Verbindungsblech2c | S 355 | 20,0 | CO11(20) | 303,1 | 0,0 | 12,1 | OK |
| Rippe1a | S 355 | 15,0 | CO11(15) | 97,0 | 0,0 | 0,0 | OK |
| Rippe1b | S 355 | 15,0 | CO11(15) | 97,0 | 0,0 | 0,0 | OK |
| Rippe1c | S 355 | 15,0 | CO11(20) | 79,7 | 0,0 | 0,0 | OK |
| Rippe1d | S 355 | 15,0 | CO11(20) | 79,7 | 0,0 | 0,0 | OK |

**Bemessungsdaten**

| Material | $f_y$ [MPa] | $\varepsilon_{lim}$ [%] |
|---|---|---|
| Baustahl S 355 | 355,0 | 5,0 |
| S 355 | 355,0 | 5,0 |

**Erläuterung von Symbolen**

| | |
|---|---|
| $t_p$ | Plattendicke |
| $\sigma_{Ed}$ | Vergleichsspannung |
| $\varepsilon_{Pl}$ | Plastische Dehnung |
| $\sigma_{c,Ed}$ | Kontaktspannung |
| $f_y$ | Streckgrenze |
| $\varepsilon_{lim}$ | Grenzwert plastische Dehnung |

## Lokale Verformung

| Name | $d_0$ [mm] | Lasten | $\delta$ [mm] | $\delta_{lim}$ [mm] | $\delta/d_0$ [%] | Nachweisstatus |
|---|---|---|---|---|---|---|
| 260 | 168 | CO11(20) | 0 | 5 | 0,1 | OK |
| 261 | 168 | CO11(20) | 0 | 5 | 0,2 | OK |

**Erläuterung von Symbolen**

| | |
|---|---|
| $d_0$ | Querschnittsgröße |
| $\delta$ | Lokale Verformung im Querschnitt |
| $\delta_{lim}$ | Zulässige Verformung |

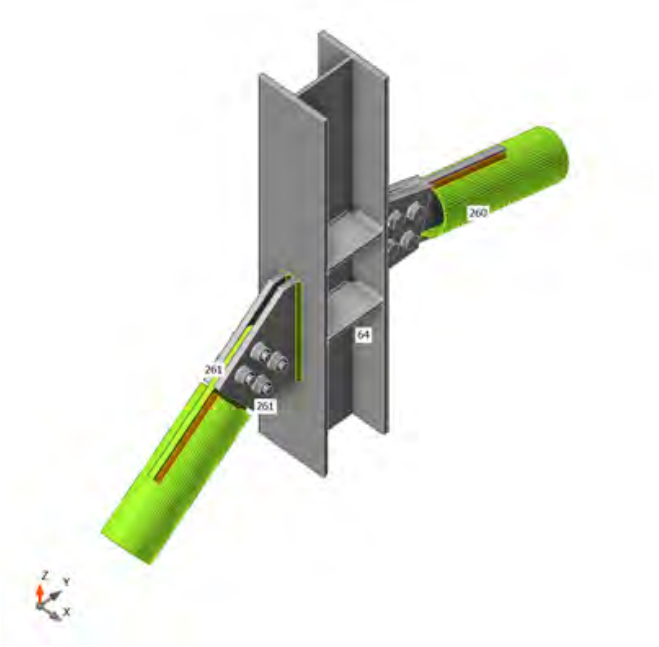


*Gesamt, CO11(20)*

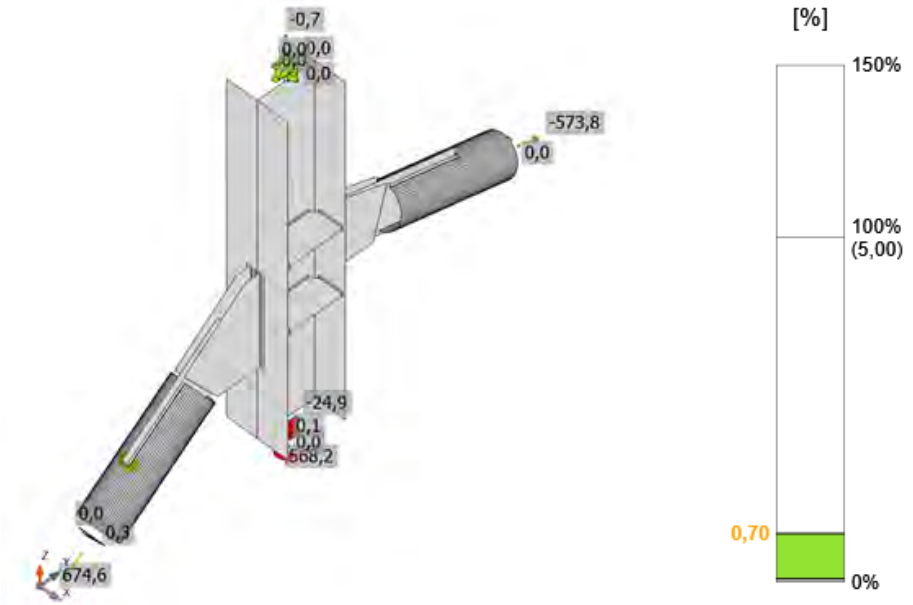


*Dehnung, CO11(20)*

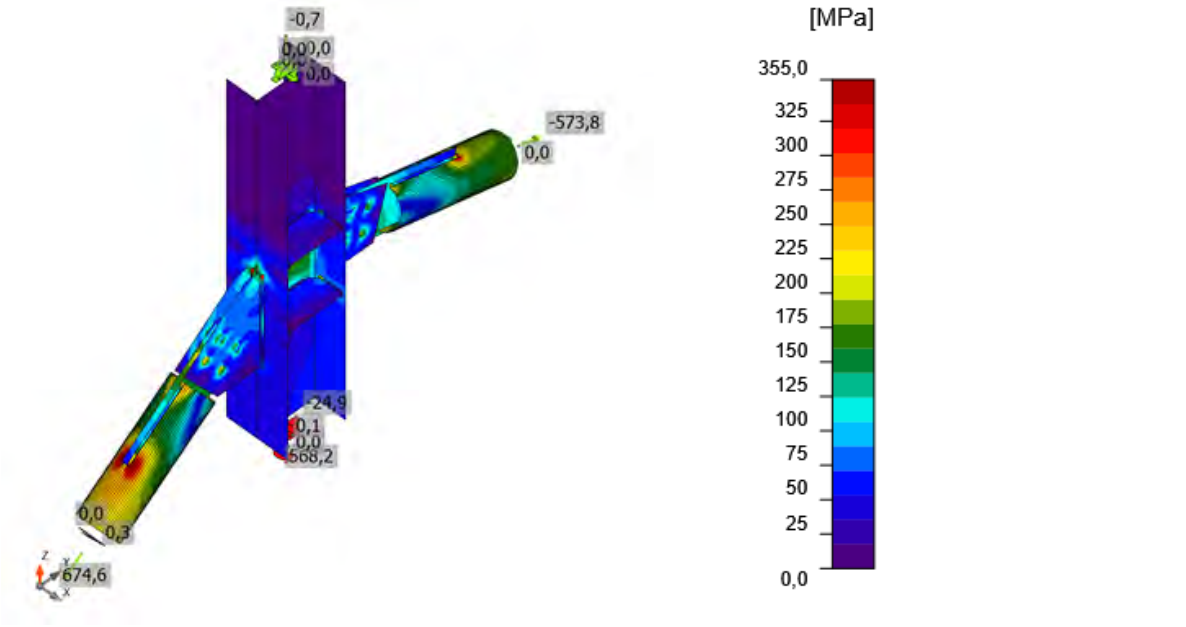


*Vergleichsspannung, CO11(20)*

## Schrauben

| Form | Position | Klasse | Lasten | $F_{t,Ed}$ [kN] | $F_{v,Ed}$ [kN] | $F_{b,Rd}$ [kN] | $Ut_t$ [%] | $Ut_s$ [%] | $Ut_{ts}$ [%] | Konstruktionsregeln | Status |
|---|---|---|---|---|---|---|---|---|---|---|---|
| 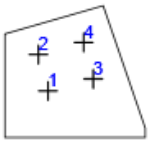 | B1 | M30 8.8 - 1 | CO11(15) | 1,1 | 74,1 | 297,0 | 0,3 | 49,9 | 34,6 | OK | OK |
| | B2 | M30 8.8 - 1 | CO11(15) | 18,0 | 76,9 | 328,2 | 5,6 | 46,8 | 39,7 | OK | OK |
| | B3 | M30 8.8 - 1 | CO11(20) | 0,9 | 67,1 | 297,0 | 0,3 | 45,2 | 31,4 | OK | OK |
| | B4 | M30 8.8 - 1 | CO11(20) | 17,4 | 69,1 | 328,2 | 5,4 | 42,1 | 35,9 | OK | OK |
| 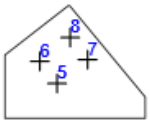 | B5 | M30 8.8 - 1 | CO11(20) | 1,1 | 85,2 | 297,0 | 0,3 | 57,4 | 39,8 | OK | OK |
| | B6 | M30 8.8 - 1 | CO11(20) | 20,2 | 87,9 | 328,2 | 6,3 | 53,6 | 45,3 | OK | OK |
| | B7 | M30 8.8 - 1 | CO11(20) | 1,3 | 81,1 | 297,0 | 0,4 | 54,6 | 37,9 | OK | OK |
| | B8 | M30 8.8 - 1 | CO11(20) | 20,5 | 83,3 | 328,2 | 6,3 | 50,8 | 43,2 | OK | OK |

**Bemessungsdaten**

| Klasse | $F_{t,Rd}$ [kN] | $B_{p,Rd}$ [kN] | $F_{v,Rd}$ [kN] |
|---|---|---|---|
| M30 8.8 - 1 | 323,1 | 715,6 | 215,4 |

**Erläuterung von Symbolen**

| | |
|---|---|
| $F_{t,Ed}$ | Zugkraft |
| $F_{v,Ed}$ | Resultierende der Schraubenscherkräfte Vy und Vz in Scherebenen |
| $F_{b,Rd}$ | Lochleibungstragfähigkeit der Platte nach EN 1993-1-8 Tab. 3.4 |
| $Ut_t$ | Ausnutzung unter Zug |
| $Ut_s$ | Ausnutzung unter Schub |
| $Ut_{ts}$ | Interaktion von Zug und Schub EN_1993-1-8 Tabelle 3.4 |
| $F_{t,Rd}$ | Zugtragfähigkeit der Schraube nach EN 1993-1-8 Tabelle 3.4 |
| $B_{p,Rd}$ | Durchstanztragfähigkeit nach EN 1993-1-8 Tabelle 3.4 |
| $F_{v,Rd}$ | Schertragfähigkeit der Schraube nach EN 1993-1-8 Tabelle 3.4 |

## Schweißnähte

| Position | Kante | $T_w$ [mm] | L [mm] | Lasten | $\sigma_{w,Ed}$ [MPa] | $\varepsilon_{Pl}$ [%] | $\sigma_{\perp}$ [MPa] | $\tau_{\perp}$ [MPa] | $\tau_{\parallel}$ [MPa] | Ut [%] | $Ut_c$ [%] | Konstruktionsregeln | Status |
|---|---|---|---|---|---|---|---|---|---|---|---|---|---|
| 64-tfl 1 | Verbindungsblech1a | ◢ 8,0 ◣ | 299 | CO11(20) | 248,8 | 0,0 | 98,4 | 114,5 | -65,5 | 57,1 | 35,4 | OK | OK |
| | | ◢ 8,0 ◣ | 299 | CO11(20) | 256,2 | 0,0 | 120,2 | -104,1 | 78,9 | 58,8 | 36,3 | OK | OK |
| 64-tfl 1 | Verbindungsblech1b | ◢ 8,0 ◣ | 299 | CO11(20) | 256,2 | 0,0 | 120,2 | 104,1 | -78,9 | 58,8 | 36,3 | OK | OK |
| | | ◢ 8,0 ◣ | 299 | CO11(20) | 248,8 | 0,0 | 98,4 | -114,5 | 65,5 | 57,1 | 35,4 | OK | OK |
| Verbindungsblech1c | 260-arc 15 | ◢ 8,0 | 298 | CO11(15) | 427,2 | 0,2 | -66,2 | -0,6 | -243,7 | 98,1 | 58,2 | OK | OK |
| Verbindungsblech1c | 260-arc 18 | ◢ 8,0 | 298 | CO11(15) | 427,2 | 0,2 | -66,2 | -0,7 | 243,7 | 98,1 | 67,5 | OK | OK |
| Verbindungsblech1c | 260-arc 47 | ◢ 8,0 | 298 | CO11(26) | 427,0 | 0,1 | -80,2 | 2,2 | -242,1 | 98,0 | 55,0 | OK | OK |
| Verbindungsblech1c | 260-arc 50 | ◢ 8,0 | 298 | CO11(26) | 427,0 | 0,1 | -80,2 | 2,3 | 242,1 | 98,0 | 65,1 | OK | OK |
| 64-bfl 1 | Verbindungsblech2a | ◢ 8,0 ◣ | 399 | CO11(20) | 322,1 | 0,0 | 127,5 | 134,9 | -104,7 | 74,0 | 38,9 | OK | OK |
| | | ◢ 8,0 ◣ | 399 | CO11(20) | 306,3 | 0,0 | 129,2 | -121,7 | 104,3 | 70,3 | 36,8 | OK | OK |
| 64-bfl 1 | Verbindungsblech2b | ◢ 8,0 ◣ | 399 | CO11(20) | 306,3 | 0,0 | 129,3 | 121,7 | -104,3 | 70,3 | 36,8 | OK | OK |
| | | ◢ 8,0 ◣ | 399 | CO11(20) | 322,1 | 0,0 | 127,5 | -134,9 | 104,7 | 74,0 | 38,9 | OK | OK |
| Verbindungsblech2c | 261-arc 15 | ◢ 8,0 | 298 | CO11(20) | 427,2 | 0,2 | -75,5 | -5,2 | 242,7 | 98,1 | 68,4 | OK | OK |
| Verbindungsblech2c | 261-arc 18 | ◢ 8,0 | 298 | CO11(20) | 427,2 | 0,2 | -74,9 | -7,3 | -242,7 | 98,1 | 60,0 | OK | OK |
| Verbindungsblech2c | 261-arc 47 | ◢ 8,0 | 298 | CO11(26) | 427,4 | 0,3 | -63,6 | -6,5 | 243,9 | 98,1 | 71,1 | OK | OK |
| Verbindungsblech2c | 261-arc 50 | ◢ 8,0 | 298 | CO11(20) | 427,4 | 0,3 | -63,6 | -6,5 | -243,9 | 98,1 | 62,5 | OK | OK |
| 64-bfl 1 | Rippe1a | ◢ 6,0 ◣ | 101 | CO11(20) | 186,3 | 0,0 | 80,5 | 94,9 | 20,1 | 42,8 | 26,4 | OK | OK |
| | | ◢ 6,0 ◣ | 101 | CO11(20) | 200,6 | 0,0 | 108,8 | -94,4 | -23,5 | 46,1 | 27,5 | OK | OK |
| 64-w 1 | Rippe1a | ◢ 6,0 ◣ | 177 | CO11(20) | 99,8 | 0,0 | -0,5 | 6,6 | 57,3 | 22,9 | 16,4 | OK | OK |
| | | ◢ 6,0 ◣ | 177 | CO11(20) | 93,5 | 0,0 | 21,4 | -14,3 | -50,5 | 21,5 | 14,5 | OK | OK |
| 64-tfl 1 | Rippe1a | ◢ 6,0 ◣ | 101 | CO11(15) | 211,6 | 0,0 | 109,2 | 99,5 | -32,4 | 48,6 | 25,0 | OK | OK |
| | | ◢ 6,0 ◣ | 101 | CO11(20) | 152,1 | 0,0 | 61,4 | -71,1 | 37,4 | 34,9 | 18,7 | OK | OK |
| 64-bfl 1 | Rippe1b | ◢ 6,0 ◣ | 101 | CO11(20) | 200,7 | 0,0 | 108,9 | 94,5 | 23,6 | 46,1 | 27,5 | OK | OK |
| | | ◢ 6,0 ◣ | 101 | CO11(20) | 186,3 | 0,0 | 80,5 | -94,9 | -20,2 | 42,8 | 26,4 | OK | OK |

| Position | Kante | $T_w$ [mm] | L [mm] | Lasten | $\sigma_{w,Ed}$ [MPa] | $\varepsilon_{Pl}$ [%] | $\sigma_{\perp}$ [MPa] | $\tau_{\perp}$ [MPa] | $\tau_{\parallel}$ [MPa] | Ut [%] | $Ut_c$ [%] | Konstruktionsregeln | Status |
|---|---|---|---|---|---|---|---|---|---|---|---|---|---|
| 64-w 1 | Rippe1b | ◢ 6,0 ◣ | 177 | CO11(20) | 93,1 | 0,0 | 21,5 | 14,4 | 50,3 | 21,4 | 14,5 | OK | OK |
| | | ◢ 6,0 ◣ | 177 | CO11(20) | 99,6 | 0,0 | -0,4 | -6,6 | -57,1 | 22,9 | 16,4 | OK | OK |
| 64-tfl 1 | Rippe1b | ◢ 6,0 ◣ | 101 | CO11(20) | 152,8 | 0,0 | 62,0 | 71,6 | -37,1 | 35,1 | 18,8 | OK | OK |
| | | ◢ 6,0 ◣ | 101 | CO11(15) | 212,3 | 0,0 | 109,7 | -99,9 | 32,0 | 48,7 | 25,1 | OK | OK |
| 64-bfl 1 | Rippe1c | ◢ 6,0 ◣ | 101 | CO11(20) | 44,8 | 0,0 | 1,7 | 2,2 | 25,7 | 10,3 | 8,9 | OK | OK |
| | | ◢ 6,0 ◣ | 101 | CO11(20) | 65,8 | 0,0 | 31,9 | -31,5 | -10,6 | 15,1 | 10,5 | OK | OK |
| 64-w 1 | Rippe1c | ◢ 6,0 ◣ | 177 | CO11(20) | 51,9 | 0,0 | 3,8 | 1,0 | 29,9 | 11,9 | 10,4 | OK | OK |
| | | ◢ 6,0 ◣ | 177 | CO11(20) | 57,9 | 0,0 | -3,4 | 0,6 | -33,4 | 13,3 | 11,3 | OK | OK |
| 64-tfl 1 | Rippe1c | ◢ 6,0 ◣ | 101 | CO11(20) | 124,8 | 0,0 | 53,5 | 63,9 | -12,2 | 28,6 | 14,7 | OK | OK |
| | | ◢ 6,0 ◣ | 101 | CO11(20) | 169,2 | 0,0 | 91,8 | -81,5 | 9,5 | 38,9 | 19,9 | OK | OK |
| 64-bfl 1 | Rippe1d | ◢ 6,0 ◣ | 101 | CO11(20) | 65,9 | 0,0 | 32,0 | 31,5 | 10,5 | 15,1 | 10,5 | OK | OK |
| | | ◢ 6,0 ◣ | 101 | CO11(20) | 44,8 | 0,0 | 1,9 | -2,4 | -25,7 | 10,3 | 8,9 | OK | OK |
| 64-w 1 | Rippe1d | ◢ 6,0 ◣ | 177 | CO11(20) | 57,9 | 0,0 | -3,4 | -0,6 | 33,4 | 13,3 | 11,3 | OK | OK |
| | | ◢ 6,0 ◣ | 177 | CO11(20) | 51,9 | 0,0 | 3,8 | -1,0 | -29,9 | 11,9 | 10,4 | OK | OK |
| 64-tfl 1 | Rippe1d | ◢ 6,0 ◣ | 101 | CO11(20) | 169,2 | 0,0 | 91,8 | 81,5 | -9,5 | 38,9 | 19,9 | OK | OK |
| | | ◢ 6,0 ◣ | 101 | CO11(20) | 124,8 | 0,0 | 53,5 | -63,9 | 12,2 | 28,6 | 14,7 | OK | OK |

**Bemessungsdaten**

| Material | $f_u$ [MPa] | $\beta_w$ [-] | $\sigma_{w,Rd}$ [MPa] | 0.9 $\sigma$ [MPa] |
|---|---|---|---|---|
| S 355 | 490,0 | 0,90 | 435,6 | 352,8 |

**Erläuterung von Symbolen**

| | |
|---|---|
| $T_w$ | Nahtdicke a |
| L | Länge |
| $\sigma_{w,Ed}$ | Vergleichsspannung |
| $\varepsilon_{Pl}$ | Dehnung |
| $\sigma_{\perp}$ | Senkrechte Spannung |
| $\tau_{\perp}$ | Scherspannung senkrecht zur Schweißnahtachse |
| $\tau_{\parallel}$ | Scherspannung parallel zur Schweißnahtachse |
| Ut | Ausnutzung |
| $Ut_c$ | Schätzung der Schweißnahtkapazität |
| ◢ | Kehlnaht |
| $f_u$ | Grenzfestigkeit der Schweißnaht |
| $\beta_w$ | Korrelationsfaktor nach EN 1993-1-8 Tab. 4.1 |
| $\sigma_{w,Rd}$ | Tragfähigkeit der Schweißnaht |
| 0.9 σ | Senkrechter Spannungswiderstand - 0.9*fu / γM2 |

### Beulen

**Die Beulanalyse wurde nicht berechnet.**

## Normeinstellungen

| Position | Wert | Einheit | Bezug |
|---|---|---|---|
| Sicherheitsfaktor $\gamma_{M0}$ | 1,00 | - | EN 1993-1-1 – 6.1 |
| Sicherheitsfaktor $\gamma_{M1}$ | 1,00 | - | EN 1993-1-1 – 6.1 |
| Sicherheitsfaktor $\gamma_{M2}$ | 1,25 | - | EN 1993-1-1 – 6.1 |
| Sicherheitsfaktor $\gamma_{M3}$ | 1,25 | - | EN 1993-1-8 – Table 2.1 |
| Sicherheitsfaktor $\gamma_C$ | 1,50 | - | EN 1992-1-1 – 2.4.2.4 |
| Sicherheitsfaktor $\gamma_{Inst}$ | 1,20 | - | EN 1992-4 – Table 4.1 |
| Verbindungskoeffizient βj | 0,67 | - | EN 1993-1-8 – 6.2.5(7) |
| Wirksame Fläche - Einfluss der Netzgröße | 0,10 | - | |
| Reibungsbeiwert - Beton | 0,25 | - | EN 1993-1-8 |
| Reibungskoeffizient bei gleitfesten Verbindungen | 0,30 | - | EN 1993-1-8 – Table 3.7 |
| Plastische Dehnung - Grenzwert | 0,05 | - | EN 1993-1-5 |
| Konstruktionsregeln | Ja | | |
| Distance between bolts [d0] | 2,20 | - | EN 1993-1-8 – Table 3.3 |
| Distance between bolts and edge [d0] | 1,20 | - | EN 1993-1-8 – Table 3.3 |
| Nachweis der Tragfähigkeit bei Betonausbruch | Beide | | |
| Berechnetes αb für Lochleibungsnachweis anwenden. | Ja | | EN 1993-1-8 – Table 3.4 |
| Gerissener Beton | Ja | | EN 1992-4 |
| Überprüfen der lokalen Verformung | Ja | | |
| Lokale Verformung - Grenzwert | 0,03 | - | CIDECT DG 1, 3 – 1.1 |
| Geometrische Nichtlinearität (GMNA) | Ja | | Analyse mit großen Verformungen für Verbindungen mit Hohlprofilen |
| Ausgesteiftes System | Nein | | EN 1993-1-8 – 5.2.2.5 |

## Projektdaten

| | |
|---|---|
| Projektname | IdeaStatiCa-Stadion_Fazanerija_JK-5_BR - 273 |
| Projektnummer | Detajl D3-O1 |
| Autor | mag. Igor Gorup dipl.ing. |
| Beschreibung | |
| Datum | 14.06.2025 |
| Norm | EN |

## Material

| | |
|---|---|
| Stahl | Baustahl S 355, S 355 |

# Projektposition 273

## Bemessung

| | |
|---|---|
| Name | 273 |
| Beschreibung | |
| Berechnung | Spannung, Dehnung/ Lasten im Gleichgewicht |

### Bauteile

#### Geometrie

| Name | Querschnitt | β – Rotation [°] | Y - Rotation [°] | α - Rotation [°] | Abstand ex [mm] | Abstand ey [mm] | Abstand ez [mm] |
|---|---|---|---|---|---|---|---|
| 261 | 12 - CHS168.3/6.3 | -90,0 | -38,0 | -180,0 | 0 | 0 | 150 |
| 97 | 295 - IPE200 | -90,0 | 0,8 | -180,0 | 0 | 0 | 0 |
| 169 | 295 - IPE200 | 0,0 | 0,0 | -180,0 | 0 | 0 | 0 |
| 288 | 294 - HEB260 | 45,0 | 90,0 | -135,0 | 100 | 0 | 0 |

#### Auflager und Kräfte

| Name | Auflager | Kräfte in | X [mm] |
|---|---|---|---|
| 261 / ende | Mx-My-Mz | Schrauben | 0 |
| 97 / ende | | Position | 0 |
| 169 / ende | | Position | 0 |
| 288 / anfang | N-Vy-Vz-Mx-My-Mz | Position | 0 |

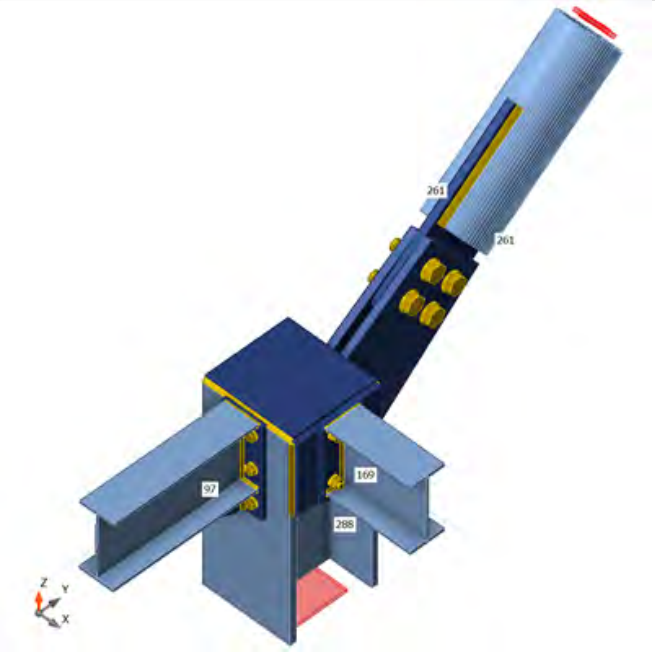


### Querschnitte

| Name | Material |
|---|---|
| 12 - CHS168.3/6.3 | Baustahl S 355 |
| 295 - IPE200 | S 355 |
| 294 - HEB260 | Baustahl S 355 |

### Schrauben

| Name | Durchmesser [mm] | $f_y$ [MPa] | $f_u$ [MPa] | Bruttofläche [$mm^2$] |
|---|---|---|---|---|
| M16 8.8 | 16 | 640,0 | 800,0 | 201 |
| M30 8.8 | 30 | 640,0 | 800,0 | 707 |

## Lasteinwirkungen (Kräfte im Gleichgewicht)

| Name | Bauteil | N [kN] | Vy [kN] | Vz [kN] | Mx [kNm] | My [kNm] | Mz [kNm] |
|---|---|---|---|---|---|---|---|
| CO11(34) | 261 / Anfang | 90,4 | 0,0 | 0,3 | 0,0 | 0,0 | 0,0 |
| | 97 / Ende | 10,2 | 2,1 | 0,2 | 0,0 | 6,0 | 0,5 |
| | 169 / Ende | 11,0 | -0,1 | 2,4 | 0,0 | -4,0 | -0,2 |
| | 288 / Anfang | 58,2 | -8,9 | 81,2 | 0,2 | -4,7 | -4,1 |
| CO11(35) | 261 / Anfang | -673,9 | 0,0 | 0,3 | 0,0 | 0,0 | 0,0 |
| | 97 / Ende | -5,2 | 1,4 | 14,7 | -0,1 | -38,9 | 0,3 |
| | 169 / Ende | -15,2 | -0,1 | 4,9 | 0,0 | -3,4 | -0,3 |
| | 288 / Anfang | -400,4 | 16,2 | -532,1 | 0,1 | 41,0 | -3,7 |
| CO11(36) | 261 / Anfang | 90,5 | 0,0 | 0,3 | 0,0 | 0,0 | 0,0 |
| | 97 / Ende | 10,7 | 2,3 | 0,1 | 0,0 | 6,1 | 0,6 |
| | 169 / Ende | 13,9 | -0,1 | 2,4 | 0,0 | -4,0 | -0,3 |
| | 288 / Anfang | 58,2 | -11,7 | 81,8 | 0,2 | -4,6 | -4,2 |
| CO11(37) | 261 / Anfang | -591,5 | 0,0 | 0,4 | 0,0 | 0,0 | 0,0 |
| | 97 / Ende | -5,9 | 1,2 | 17,7 | -0,1 | -39,0 | 0,3 |
| | 169 / Ende | -20,7 | -0,2 | 10,5 | 0,0 | -9,6 | -0,3 |
| | 288 / Anfang | -339,8 | 22,0 | -468,9 | 0,1 | 31,1 | -9,9 |
| CO11(38) | 261 / Anfang | -673,9 | 0,0 | 0,3 | 0,0 | 0,0 | 0,0 |
| | 97 / Ende | -5,6 | 1,2 | 14,7 | -0,1 | -38,9 | 0,3 |
| | 169 / Ende | -17,7 | -0,1 | 4,9 | 0,0 | -3,5 | -0,2 |
| | 288 / Anfang | -400,4 | 18,7 | -532,5 | 0,1 | 40,9 | -3,7 |
| CO9(39) | 261 / Anfang | -7,8 | 0,0 | 0,0 | 0,0 | 0,0 | 0,0 |
| | 97 / Ende | -10,6 | 0,5 | 1,2 | 0,0 | -4,6 | 0,3 |
| | 169 / Ende | -7,5 | -0,1 | -1,8 | 0,0 | 6,4 | -0,2 |
| | 288 / Anfang | -5,2 | 7,5 | -17,6 | 0,1 | -3,6 | 6,4 |
| CO11(40) | 261 / Anfang | -119,4 | 0,0 | 0,4 | 0,0 | 0,0 | 0,0 |
| | 97 / Ende | 11,6 | 2,3 | 6,4 | 0,0 | -7,2 | 0,6 |
| | 169 / Ende | 7,8 | -0,1 | 6,7 | 0,0 | -8,3 | -0,3 |
| | 288 / Anfang | -60,3 | -5,4 | -82,7 | 0,2 | 7,0 | -8,4 |
| CO11(41) | 261 / Anfang | 45,0 | 0,0 | 0,5 | 0,0 | 0,0 | 0,0 |
| | 97 / Ende | 11,2 | 2,3 | 2,3 | 0,0 | 2,6 | 0,6 |
| | 169 / Ende | 12,5 | -0,1 | 4,0 | 0,0 | -5,6 | -0,3 |
| | 288 / Anfang | 34,2 | -10,2 | 46,4 | 0,2 | -2,7 | -5,7 |
| CO11(42) | 261 / Anfang | -505,9 | 0,0 | 0,4 | 0,0 | 0,0 | 0,0 |
| | 97 / Ende | 3,5 | 0,3 | 16,5 | 0,0 | -32,9 | 0,1 |
| | 169 / Ende | -11,6 | -0,1 | 12,1 | 0,0 | -13,0 | -0,2 |
| | 288 / Anfang | -285,5 | 12,2 | -393,2 | 0,0 | 27,0 | -13,1 |
| CO11(43) | 261 / Anfang | 90,0 | 0,0 | 0,3 | 0,0 | 0,0 | 0,0 |
| | 97 / Ende | 7,5 | 2,1 | 0,4 | 0,0 | 5,2 | 0,5 |
| | 169 / Ende | 5,0 | -0,1 | 1,5 | 0,0 | -0,9 | -0,2 |
| | 288 / Anfang | 57,4 | -3,0 | 78,1 | 0,2 | -5,4 | -1,0 |
| CO11(44) | 261 / Anfang | -673,0 | 0,0 | 0,3 | 0,0 | 0,0 | 0,0 |
| | 97 / Ende | -2,1 | 1,5 | 14,5 | 0,0 | -37,9 | 0,4 |
| | 169 / Ende | -7,7 | -0,2 | 6,0 | 0,0 | -7,5 | -0,3 |
| | 288 / Anfang | -398,9 | 9,5 | -528,4 | 0,1 | 41,8 | -7,5 |
| CO11(45) | 261 / Anfang | -590,7 | 0,0 | 0,4 | 0,0 | 0,0 | 0,0 |
| | 97 / Ende | -2,8 | 1,3 | 17,4 | -0,1 | -38,0 | 0,3 |
| | 169 / Ende | -13,5 | -0,2 | 11,6 | 0,0 | -13,6 | -0,3 |
| | 288 / Anfang | -338,4 | 15,3 | -465,2 | 0,0 | 31,9 | -13,6 |
| CO11(25) | 261 / Anfang | -481,5 | 0,0 | 0,4 | 0,0 | 0,0 | 0,0 |
| | 97 / Ende | -6,7 | 2,2 | 14,0 | -0,1 | -31,5 | 0,6 |
| | 169 / Ende | -7,8 | -0,2 | 8,5 | 0,0 | -11,2 | -0,4 |
| | 288 / Anfang | -276,4 | 10,2 | -384,2 | 0,1 | 25,5 | -11,3 |
| CO11(29) | 261 / Anfang | -627,8 | 0,0 | 0,3 | 0,0 | 0,0 | 0,0 |

| Name | Bauteil | N [kN] | Vy [kN] | Vz [kN] | Mx [kNm] | My [kNm] | Mz [kNm] |
|---|---|---|---|---|---|---|---|
| | 97 / Ende | -5,9 | 1,2 | 12,5 | -0,1 | -35,3 | 0,3 |
| | 169 / Ende | -16,0 | -0,1 | 3,3 | 0,0 | -2,0 | -0,2 |
| | 288 / Anfang | -375,2 | 17,0 | -497,0 | 0,1 | 39,0 | -2,2 |
| CO11(31) | 261 / Anfang | -482,2 | 0,0 | 0,4 | 0,0 | 0,0 | 0,0 |
| | 97 / Ende | -9,8 | 2,1 | 14,2 | -0,1 | -32,4 | 0,5 |
| | 169 / Ende | -14,7 | -0,2 | 7,5 | 0,0 | -7,4 | -0,4 |
| | 288 / Anfang | -277,8 | 16,7 | -387,7 | 0,1 | 24,7 | -7,6 |
| CO11(32) | 261 / Anfang | -270,4 | 0,0 | 0,3 | 0,0 | 0,0 | 0,0 |
| | 97 / Ende | -7,7 | 2,0 | 7,8 | 0,0 | -18,1 | 0,5 |
| | 169 / Ende | -4,5 | -0,1 | 4,2 | 0,0 | -6,9 | -0,3 |
| | 288 / Anfang | -155,2 | 6,6 | -220,3 | 0,1 | 13,9 | -7,0 |
| CO11(33) | 261 / Anfang | -271,0 | 0,0 | 0,3 | 0,0 | 0,0 | 0,0 |
| | 97 / Ende | -10,2 | 2,0 | 8,0 | 0,0 | -18,9 | 0,5 |
| | 169 / Ende | -8,3 | -0,1 | 3,2 | 0,0 | -3,4 | -0,3 |
| | 288 / Anfang | -156,4 | 10,2 | -223,1 | 0,1 | 13,2 | -3,6 |
| CO11(11) | 261 / Anfang | -160,2 | 0,0 | 0,4 | 0,0 | 0,0 | 0,0 |
| | 97 / Ende | 11,6 | 2,3 | 4,9 | 0,0 | -7,1 | 0,6 |
| | 169 / Ende | 9,4 | -0,1 | 3,9 | 0,0 | -5,2 | -0,3 |
| | 288 / Anfang | -89,9 | -6,9 | -114,8 | 0,2 | 11,9 | -5,3 |
| CO11(14) | 261 / Anfang | -591,5 | 0,0 | 0,4 | 0,0 | 0,0 | 0,0 |
| | 97 / Ende | -5,5 | 1,4 | 17,7 | -0,1 | -38,9 | 0,3 |
| | 169 / Ende | -18,2 | -0,2 | 10,5 | 0,0 | -9,6 | -0,3 |
| | 288 / Anfang | -339,9 | 19,4 | -468,4 | 0,1 | 31,1 | -9,8 |
| CO11(15) | 261 / Anfang | 90,0 | 0,0 | 0,3 | 0,0 | 0,0 | 0,0 |
| | 97 / Ende | 8,0 | 2,2 | 0,4 | 0,0 | 5,3 | 0,5 |
| | 169 / Ende | 7,9 | -0,1 | 1,5 | 0,0 | -0,9 | -0,3 |
| | 288 / Anfang | 57,4 | -5,8 | 78,7 | 0,2 | -5,3 | -1,0 |
| CO11(17) | 261 / Anfang | -175,6 | 0,0 | 0,4 | 0,0 | 0,0 | 0,0 |
| | 97 / Ende | 3,7 | 0,5 | 8,4 | 0,0 | -13,1 | 0,3 |
| | 169 / Ende | 1,4 | 0,0 | 6,6 | 0,0 | -7,7 | -0,1 |
| | 288 / Anfang | -93,1 | -0,9 | -134,6 | 0,1 | 7,7 | -7,8 |
| CO11(18) | 261 / Anfang | -436,3 | 0,0 | 0,3 | 0,0 | 0,0 | 0,0 |
| | 97 / Ende | -10,4 | 1,9 | 12,0 | -0,1 | -28,9 | 0,4 |
| | 169 / Ende | -15,7 | -0,2 | 5,9 | 0,0 | -5,9 | -0,3 |
| | 288 / Anfang | -252,9 | 17,6 | -352,5 | 0,1 | 22,8 | -6,1 |
| CO11(19) | 261 / Anfang | -505,9 | 0,0 | 0,4 | 0,0 | 0,0 | 0,0 |
| | 97 / Ende | 3,9 | 0,4 | 16,5 | -0,1 | -32,8 | 0,2 |
| | 169 / Ende | -9,0 | -0,1 | 12,1 | 0,0 | -13,0 | -0,2 |
| | 288 / Anfang | -285,5 | 9,6 | -392,7 | 0,0 | 27,1 | -13,1 |
| CO11(21) | 261 / Anfang | -381,5 | 0,0 | 0,4 | 0,0 | 0,0 | 0,0 |
| | 97 / Ende | 4,0 | 0,5 | 11,0 | 0,0 | -22,9 | 0,2 |
| | 169 / Ende | -1,7 | -0,1 | 6,5 | 0,0 | -7,2 | -0,1 |
| | 288 / Anfang | -218,8 | 2,2 | -295,5 | 0,0 | 22,2 | -7,4 |
| CO11(22) | 261 / Anfang | -271,1 | 0,0 | 0,3 | 0,0 | 0,0 | 0,0 |
| | 97 / Ende | -10,6 | 1,9 | 8,0 | 0,0 | -19,0 | 0,4 |
| | 169 / Ende | -11,0 | -0,1 | 3,3 | 0,0 | -3,4 | -0,3 |
| | 288 / Anfang | -156,4 | 12,8 | -223,6 | 0,1 | 13,1 | -3,5 |
| CO11(4) | 261 / Anfang | -506,7 | 0,0 | 0,4 | 0,0 | 0,0 | 0,0 |
| | 97 / Ende | 0,9 | 0,3 | 16,7 | -0,1 | -33,8 | 0,1 |
| | 169 / Ende | -16,0 | -0,1 | 11,0 | 0,0 | -9,2 | -0,2 |
| | 288 / Anfang | -286,8 | 16,2 | -396,2 | 0,0 | 26,2 | -9,4 |
| CO11(7) | 261 / Anfang | -249,3 | 0,0 | 0,4 | 0,0 | 0,0 | 0,0 |
| | 97 / Ende | 5,9 | 1,5 | 7,6 | 0,0 | -14,3 | 0,4 |
| | 169 / Ende | -0,9 | -0,1 | 4,0 | 0,0 | -2,5 | -0,2 |

| Name | Bauteil | N [kN] | Vy [kN] | Vz [kN] | Mx [kNm] | My [kNm] | Mz [kNm] |
|---|---|---|---|---|---|---|---|
| | 288 / Anfang | -142,3 | 2,4 | -190,3 | 0,2 | 15,2 | -2,7 |
| CO11(9) | 261 / Anfang | 45,0 | 0,0 | 0,5 | 0,0 | 0,0 | 0,0 |
| | 97 / Ende | 10,7 | 2,2 | 2,4 | 0,0 | 2,5 | 0,5 |
| | 169 / Ende | 9,6 | -0,1 | 4,0 | 0,0 | -5,6 | -0,3 |
| | 288 / Anfang | 34,2 | -7,4 | 45,8 | 0,2 | -2,8 | -5,7 |

### Fehlende Lasten

| Name | X [kN] | Y [kN] | Z [kN] | Mx [kNm] | My [kNm] | Mz [kNm] |
|---|---|---|---|---|---|---|
| CO11(34) | -0,1 | 0,1 | -0,2 | -32,3 | -1,0 | -0,1 |
| CO11(35) | -0,3 | 4,0 | -5,1 | 234,1 | 1,4 | 0,1 |
| CO11(36) | -0,1 | 0,1 | -0,2 | -32,4 | -1,3 | -0,1 |
| CO11(37) | 0,0 | 3,0 | -3,9 | 205,7 | 2,0 | 0,1 |
| CO11(38) | -0,2 | 4,0 | -5,1 | 234,2 | 1,7 | 0,1 |
| CO9(39) | -0,4 | -0,8 | 0,0 | 3,9 | 0,7 | 0,0 |
| CO11(40) | 0,1 | 0,0 | 0,0 | 40,3 | -0,6 | -0,1 |
| CO11(41) | 0,0 | 0,1 | -0,1 | -16,7 | -1,2 | -0,1 |
| CO11(42) | 0,3 | 2,0 | -2,6 | 175,1 | 1,2 | 0,0 |
| CO11(43) | 0,0 | 0,1 | -0,2 | -31,9 | -0,4 | -0,1 |
| CO11(44) | 0,3 | 3,8 | -5,0 | 233,5 | 0,9 | 0,0 |
| CO11(45) | 0,5 | 2,9 | -3,8 | 205,1 | 1,5 | 0,0 |
| CO11(25) | 0,3 | 2,0 | -2,6 | 167,7 | 1,0 | -0,1 |
| CO11(29) | -0,1 | 3,5 | -4,5 | 218,2 | 1,6 | 0,1 |
| CO11(31) | -0,1 | 2,1 | -2,8 | 168,2 | 1,5 | 0,0 |
| CO11(32) | 0,1 | 0,7 | -0,9 | 94,6 | 0,6 | -0,1 |
| CO11(33) | -0,1 | 0,7 | -0,9 | 95,1 | 0,9 | 0,0 |
| CO11(11) | 0,1 | 0,1 | -0,1 | 54,5 | -0,8 | -0,1 |
| CO11(14) | -0,1 | 3,0 | -3,9 | 205,6 | 1,8 | 0,1 |
| CO11(15) | 0,0 | 0,1 | -0,2 | -32,0 | -0,7 | -0,1 |
| CO11(17) | 0,0 | 0,2 | -0,3 | 60,6 | -0,2 | -0,1 |
| CO11(18) | 0,0 | 1,8 | -2,3 | 152,4 | 1,7 | 0,0 |
| CO11(19) | 0,2 | 2,0 | -2,6 | 175,1 | 0,9 | 0,0 |
| CO11(21) | 0,0 | 1,1 | -1,4 | 132,0 | 0,1 | -0,1 |
| CO11(22) | 0,0 | 0,7 | -0,9 | 95,1 | 1,2 | 0,0 |
| CO11(4) | -0,2 | 2,0 | -2,7 | 175,6 | 1,4 | 0,1 |
| CO11(7) | -0,1 | 0,4 | -0,5 | 85,9 | 0,1 | -0,1 |
| CO11(9) | 0,0 | 0,1 | -0,1 | -16,6 | -0,8 | -0,1 |

## Nachweis

### Übersicht

| Name | Wert | Nachweisstatus |
|---|---|---|
| Berechnung | 100,0% | OK |
| Platten | 2,2 < 5,0% | OK |
| Lokale Verformung | 0,2 < 3% | OK |
| Schrauben | 83,5 < 100% | OK |
| Schweißnähte | 98,6 < 100% | OK |
| Beulen | Nicht berechnet | |

## Platten

| Name | Material | $t_p$ [mm] | Lasten | $\sigma_{Ed}$ [MPa] | $\varepsilon_{Pl}$ [%] | $\sigma_{c,Ed}$ [MPa] | Status |
|---|---|---|---|---|---|---|---|
| 261 | Baustahl S 355 | 6,3 | CO11(38) | 359,7 | 2,2 | 0,0 | OK |
| 97-bfl 1 | S 355 | 8,5 | CO11(37) | 328,9 | 0,0 | 0,0 | OK |
| 97-tfl 1 | S 355 | 8,5 | CO11(38) | 258,0 | 0,0 | 0,0 | OK |
| 97-w 1 | S 355 | 5,6 | CO11(38) | 339,1 | 0,0 | 0,0 | OK |
| 169-bfl 1 | S 355 | 8,5 | CO9(39) | 214,8 | 0,0 | 0,0 | OK |
| 169-tfl 1 | S 355 | 8,5 | CO11(45) | 236,5 | 0,0 | 0,0 | OK |
| 169-w 1 | S 355 | 5,6 | CO11(45) | 123,1 | 0,0 | 0,0 | OK |
| 288-bfl 1 | Baustahl S 355 | 17,5 | CO11(38) | 355,1 | 0,0 | 88,5 | OK |
| 288-tfl 1 | Baustahl S 355 | 17,5 | CO11(38) | 355,1 | 0,1 | 0,0 | OK |
| 288-w 1 | Baustahl S 355 | 10,0 | CO11(38) | 356,7 | 0,8 | 0,0 | OK |
| Stirnblech1 | S 355 | 15,0 | CO11(14) | 355,2 | 0,1 | 105,7 | OK |
| Steifenblech1 | S 355 | 15,0 | CO11(38) | 124,5 | 0,0 | 0,0 | OK |
| Verbindungsblech1a | S 355 | 20,0 | CO11(38) | 244,9 | 0,0 | 12,0 | OK |
| Verbindungsblech1b | S 355 | 20,0 | CO11(38) | 251,8 | 0,0 | 11,9 | OK |
| Verbindungsblech1c | S 355 | 20,0 | CO11(38) | 355,3 | 0,2 | 12,5 | OK |
| Verschobene Stirnplatte1a | S 355 | 15,0 | CO11(45) | 355,5 | 0,2 | 48,8 | OK |
| Verschobene Stirnplatte1b | S 355 | 12,0 | CO11(45) | 306,5 | 0,0 | 89,0 | OK |
| Verstärkung1 | S 355 | 10,0 | CO11(38) | 355,8 | 0,4 | 0,0 | OK |

**Bemessungsdaten**

| Material | $f_y$ [MPa] | $\varepsilon_{lim}$ [%] |
|---|---|---|
| Baustahl S 355 | 355,0 | 5,0 |
| S 355 | 355,0 | 5,0 |

**Erläuterung von Symbolen**

| | |
|---|---|
| $t_p$ | Plattendicke |
| $\sigma_{Ed}$ | Vergleichsspannung |
| $\varepsilon_{Pl}$ | Plastische Dehnung |
| $\sigma_{c,Ed}$ | Kontaktspannung |
| $f_y$ | Streckgrenze |
| $\varepsilon_{lim}$ | Grenzwert plastische Dehnung |

## Lokale Verformung

| Name | $d_0$ [mm] | Lasten | $\delta$ [mm] | $\delta_{lim}$ [mm] | $\delta/d_0$ [%] | Nachweisstatus |
|---|---|---|---|---|---|---|
| 261 | 168 | CO11(38) | 0 | 5 | 0,2 | OK |

**Erläuterung von Symbolen**

| | |
|---|---|
| $d_0$ | Querschnittsgröße |
| $\delta$ | Lokale Verformung im Querschnitt |
| $\delta_{lim}$ | Zulässige Verformung |

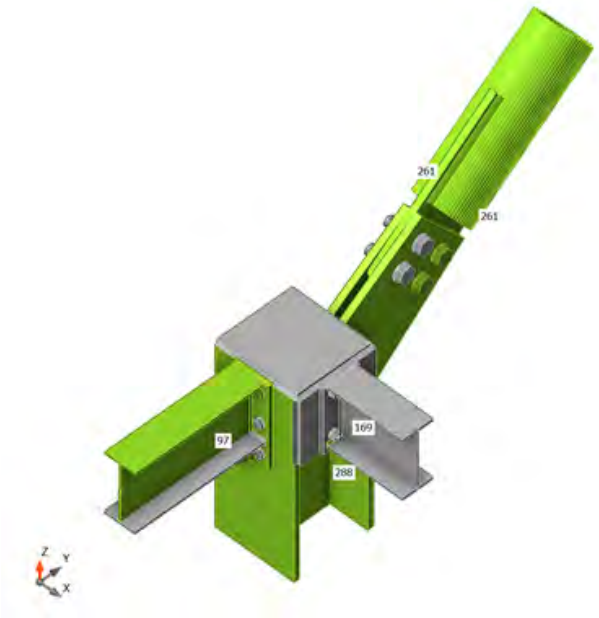


*Gesamt, CO11(38)*

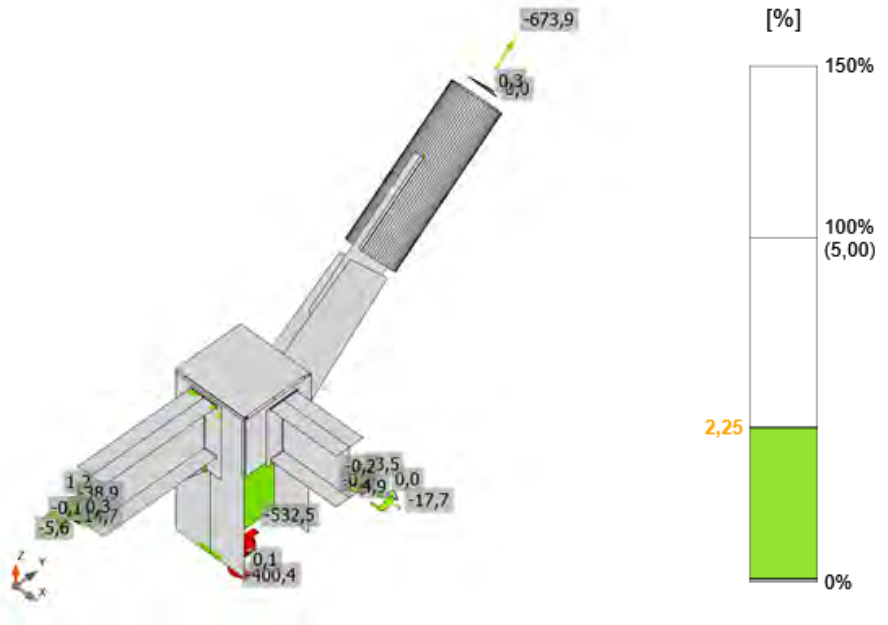


*Dehnung, CO11(38)*

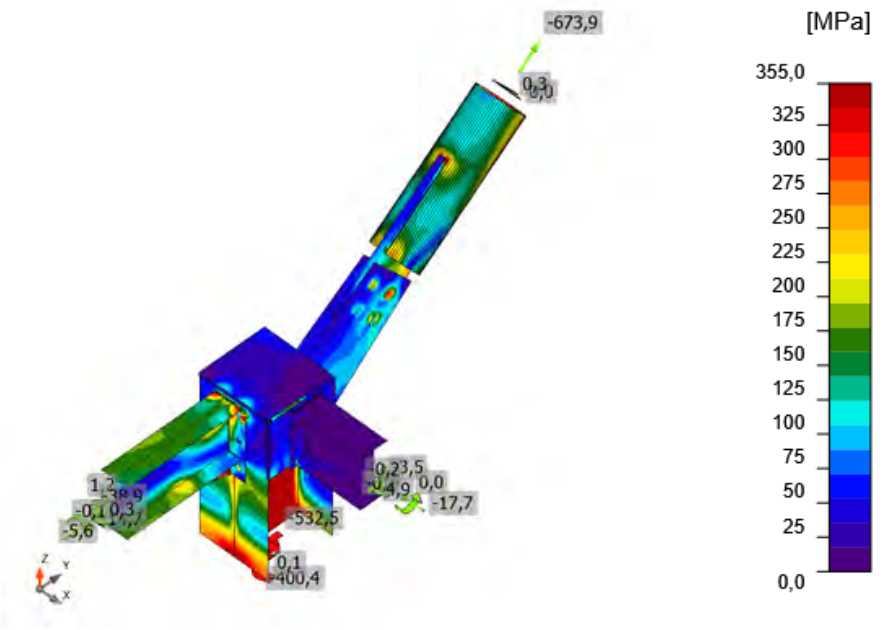


*Vergleichsspannung, CO11(38)*

## Schrauben

| Form | Position | Klasse | Lasten | $F_{t,Ed}$ [kN] | $F_{v,Ed}$ [kN] | $F_{b,Rd}$ [kN] | $Ut_t$ [%] | $Ut_s$ [%] | $Ut_{ts}$ [%] | Konstruktionsregeln | Status |
|---|---|---|---|---|---|---|---|---|---|---|---|
| 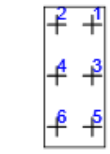 | B1 | M16 8.8 - 1 | CO11(14) | 75,5 | 1,9 | 101,3 | 83,5 | 3,2 | 62,8 | OK | OK |
| | B2 | M16 8.8 - 1 | CO11(37) | 75,4 | 1,1 | 108,9 | 83,4 | 1,9 | 61,4 | OK | OK |
| | B3 | M16 8.8 - 1 | CO11(14) | 23,5 | 3,3 | 126,1 | 26,0 | 5,4 | 24,0 | OK | OK |
| | B4 | M16 8.8 - 1 | CO11(37) | 23,1 | 2,2 | 119,4 | 25,6 | 3,6 | 21,9 | OK | OK |
| | B5 | M16 8.8 - 1 | CO11(36) | 13,7 | 0,4 | 104,1 | 15,2 | 0,7 | 11,6 | OK | OK |
| | B6 | M16 8.8 - 1 | CO11(36) | 13,3 | 0,4 | 152,5 | 14,7 | 0,7 | 11,2 | OK | OK |
| 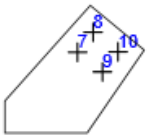 | B7 | M30 8.8 - 2 | CO11(38) | 2,7 | 108,9 | 297,0 | 0,8 | 72,9 | 51,2 | OK | OK |
| | B8 | M30 8.8 - 2 | CO11(38) | 23,3 | 110,8 | 328,2 | 7,2 | 67,3 | 56,6 | OK | OK |
| | B9 | M30 8.8 - 2 | CO11(44) | 0,6 | 62,9 | 297,0 | 0,2 | 42,2 | 29,4 | OK | OK |
| | B10 | M30 8.8 - 2 | CO11(44) | 18,3 | 63,9 | 328,2 | 5,7 | 38,8 | 33,7 | OK | OK |
| 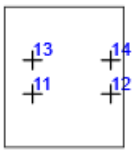 | B11 | M16 8.8 - 3 | CO9(39) | 25,2 | 1,5 | 105,1 | 27,9 | 2,4 | 22,3 | OK | OK |
| | B12 | M16 8.8 - 3 | CO11(45) | 36,8 | 3,9 | 82,4 | 40,7 | 6,4 | 35,4 | OK | OK |
| | B13 | M16 8.8 - 3 | CO9(39) | 23,1 | 1,5 | 106,4 | 25,5 | 2,5 | 20,8 | OK | OK |
| | B14 | M16 8.8 - 3 | CO11(19) | 32,9 | 3,9 | 81,0 | 36,4 | 6,4 | 32,4 | OK | OK |

**Bemessungsdaten**

| Klasse | $F_{t,Rd}$ [kN] | $B_{p,Rd}$ [kN] | $F_{v,Rd}$ [kN] |
|---|---|---|---|
| M16 8.8 - 1 | 90,4 | 281,2 | 60,3 |
| M30 8.8 - 2 | 323,1 | 715,6 | 215,4 |
| M16 8.8 - 3 | 90,4 | 225,0 | 60,3 |

**Erläuterung von Symbolen**

| | |
|---|---|
| $F_{t,Ed}$ | Zugkraft |
| $F_{v,Ed}$ | Resultierende der Schraubenscherkräfte Vy und Vz in Scherebenen |
| $F_{b,Rd}$ | Lochleibungstragfähigkeit der Platte nach EN 1993-1-8 Tab. 3.4 |
| $Ut_t$ | Ausnutzung unter Zug |
| $Ut_s$ | Ausnutzung unter Schub |
| $Ut_{ts}$ | Interaktion von Zug und Schub EN_1993-1-8 Tabelle 3.4 |
| $F_{t,Rd}$ | Zugtragfähigkeit der Schraube nach EN 1993-1-8 Tabelle 3.4 |
| $B_{p,Rd}$ | Durchstanztragfähigkeit nach EN 1993-1-8 Tabelle 3.4 |
| $F_{v,Rd}$ | Schertragfähigkeit der Schraube nach EN 1993-1-8 Tabelle 3.4 |

## Schweißnähte

| Position | Kante | $T_w$ [mm] | L [mm] | Lasten | $\sigma_{w,Ed}$ [MPa] | $\varepsilon_{Pl}$ [%] | $\sigma_{\perp}$ [MPa] | $\tau_{\perp}$ [MPa] | $\tau_{\parallel}$ [MPa] | Ut [%] | $Ut_c$ [%] | Konstruktionsregeln | Status |
|---|---|---|---|---|---|---|---|---|---|---|---|---|---|
| Stirnblech1 | 97-bfl 1 | ◢ 4,0 ◣ | 100 | CO11(37) | 337,8 | 0,0 | 211,2 | 97,1 | 117,2 | 77,5 | 58,6 | OK | OK |
| | | ◢ 4,0 ◣ | 100 | CO11(37) | 166,1 | 0,0 | -25,1 | -5,4 | 94,7 | 38,1 | 32,4 | OK | OK |
| Stirnblech1 | 97-tfl 1 | ◢ 4,0 ◣ | 99 | CO11(35) | 124,9 | 0,0 | -77,5 | -55,4 | 11,4 | 28,7 | 17,7 | OK | OK |
| | | ◢ 4,0 ◣ | 99 | CO11(38) | 86,3 | 0,0 | -14,3 | 25,6 | 41,9 | 19,8 | 13,0 | OK | OK |
| Stirnblech1 | 97-w 1 | ◢ 4,0 ◣ | 189 | CO11(37) | 349,5 | 0,0 | 140,4 | 134,4 | -126,9 | 80,3 | 45,6 | OK | OK |
| | | ◢ 4,0 ◣ | 189 | CO11(35) | 347,4 | 0,0 | 131,9 | -138,6 | 123,3 | 79,8 | 46,7 | OK | OK |
| Steifenblech1 | 288-bfl 1 | ◢ 6,0 ◣ | 259 | CO11(45) | 127,0 | 0,0 | 16,5 | 37,0 | 62,6 | 29,2 | 15,6 | OK | OK |
| | | ◢ 6,0 ◣ | 258 | CO11(45) | 64,8 | 0,0 | 6,1 | -11,6 | -35,4 | 14,9 | 9,3 | OK | OK |
| Steifenblech1 | 288-tfl 1 | ◢ 6,0 ◣ | 258 | CO11(19) | 60,4 | 0,0 | -45,2 | -0,1 | -23,1 | 13,9 | 8,9 | OK | OK |
| | | ◢ 6,0 ◣ | 259 | CO11(45) | 174,0 | 0,0 | 30,6 | -33,6 | -93,0 | 39,9 | 21,5 | OK | OK |
| Steifenblech1 | 288-w 1 | ◢ 6,0 ◣ | 241 | CO11(14) | 36,8 | 0,0 | 2,1 | 0,8 | -21,2 | 8,5 | 7,6 | OK | OK |
| | | ◢ 6,0 ◣ | 241 | CO11(38) | 44,4 | 0,0 | -4,4 | 3,9 | 25,2 | 10,2 | 8,7 | OK | OK |
| 288-tfl 1 | Verbindungsblech1a | ◢ 10,0 ◣ | 259 | CO11(38) | 427,2 | 0,2 | 128,9 | -143,8 | -186,1 | 98,1 | 49,4 | OK | OK |
| | | ◢ 10,0 ◣ | 259 | CO11(38) | 427,3 | 0,3 | 147,5 | 134,3 | 188,6 | 98,1 | 49,5 | OK | OK |
| 288-tfl 1 | Verbindungsblech1b | ◢ 10,0 ◣ | 259 | CO11(38) | 427,2 | 0,2 | 143,9 | -129,5 | -192,8 | 98,1 | 50,8 | OK | OK |
| | | ◢ 10,0 ◣ | 259 | CO11(38) | 427,3 | 0,3 | 130,5 | 143,6 | 185,9 | 98,1 | 52,0 | OK | OK |
| Verbindungsblech1c | 261-arc 15 | ◢ 8,0 | 298 | CO11(38) | 428,8 | 1,1 | -27,5 | -5,5 | -247,0 | 98,4 | 72,5 | OK | OK |
| Verbindungsblech1c | 261-arc 18 | ◢ 8,0 | 298 | CO11(38) | 428,7 | 1,1 | -27,5 | -4,7 | 247,0 | 98,4 | 81,4 | OK | OK |
| Verbindungsblech1c | 261-arc 47 | ◢ 8,0 | 298 | CO11(44) | 342,6 | 0,0 | -128,2 | -18,6 | -182,5 | 78,7 | 45,8 | OK | OK |
| Verbindungsblech1c | 261-arc 50 | ◢ 8,0 | 298 | CO11(44) | 337,5 | 0,0 | -126,0 | -15,7 | 180,1 | 77,5 | 51,4 | OK | OK |
| Verschobene Stirnplatte1a | 288-tfl 1 | ◢ 6,0 ◣ | 206 | CO11(45) | 185,5 | 0,0 | -73,0 | -96,0 | 22,1 | 42,6 | 36,4 | OK | OK |
| | | ◢ 6,0 ◣ | 206 | CO11(45) | 427,0 | 0,1 | -266,7 | -189,8 | 32,4 | 98,0 | 74,3 | OK | OK |

| Position | Kante | $T_w$ [mm] | L [mm] | Lasten | $\sigma_{w,Ed}$ [MPa] | $\varepsilon_{Pl}$ [%] | $\sigma_{\perp}$ [MPa] | $\tau_{\perp}$ [MPa] | $\tau_{\parallel}$ [MPa] | Ut [%] | $Ut_c$ [%] | Konstruktionsregeln | Status |
|---|---|---|---|---|---|---|---|---|---|---|---|---|---|
| Verschobene Stirnplatte1a | 288-bfl 1 | ◢ 6,0 ◣ | 209 | CO11(45) | 427,0 | 0,1 | -281,4 | 185,3 | 6,1 | 98,0 | 70,7 | OK | OK |
| | | ◢ 6,0 ◣ | 209 | CO11(45) | 184,6 | 0,0 | 122,3 | -48,2 | -63,6 | 42,4 | 37,0 | OK | OK |
| Verschobene Stirnplatte1b | 169-bfl 1 | ◢ 4,0 ◣ | 100 | CO9(39) | 295,2 | 0,0 | -132,8 | -74,7 | 132,6 | 67,8 | 38,9 | OK | OK |
| | | ◢ 4,0 ◣ | 100 | CO9(39) | 262,9 | 0,0 | -169,8 | -88,9 | -74,4 | 60,4 | 38,5 | OK | OK |
| Verschobene Stirnplatte1b | 169-tfl 1 | ◢ 4,0 ◣ | 99 | CO11(45) | 429,3 | 1,4 | -182,2 | -177,2 | 137,7 | 98,6 | 81,3 | OK | OK |
| | | ◢ 4,0 ◣ | 99 | CO11(45) | 428,9 | 1,2 | -170,2 | 176,2 | -143,6 | 98,5 | 83,5 | OK | OK |
| Verschobene Stirnplatte1b | 169-w 1 | ◢ 4,0 ◣ | 189 | CO11(45) | 134,1 | 0,0 | 64,5 | 66,4 | 14,2 | 30,8 | 19,1 | OK | OK |
| | | ◢ 4,0 ◣ | 189 | CO11(45) | 134,1 | 0,0 | 65,8 | -63,9 | -21,7 | 30,8 | 17,5 | OK | OK |
| Stirnblech1 | Verstärkung1 | ◢ 6,0 ◣ | 79 | CO11(38) | 428,0 | 0,7 | -206,5 | -206,6 | 64,6 | 98,3 | 70,6 | OK | OK |
| | | ◢ 6,0 ◣ | 79 | CO11(38) | 428,0 | 0,7 | -206,4 | 206,5 | -64,8 | 98,3 | 70,7 | OK | OK |
| 97-tfl 1 | Verstärkung1 | ◢ 6,0 ◣ | 179 | CO11(38) | 369,2 | 0,0 | -102,2 | -105,8 | -175,3 | 84,8 | 53,7 | OK | OK |
| | | ◢ 6,0 ◣ | 179 | CO11(38) | 376,4 | 0,0 | -108,1 | 104,5 | 180,0 | 86,4 | 54,6 | OK | OK |

**Bemessungsdaten**

| Material | $f_u$ [MPa] | $\beta_w$ [-] | $\sigma_{w,Rd}$ [MPa] | 0.9 σ [MPa] |
|---|---|---|---|---|
| S 355 | 490,0 | 0,90 | 435,6 | 352,8 |

**Erläuterung von Symbolen**

| | |
|---|---|
| $T_w$ | Nahtdicke a |
| L | Länge |
| $\sigma_{w,Ed}$ | Vergleichsspannung |
| $\varepsilon_{Pl}$ | Dehnung |
| $\sigma_{\perp}$ | Senkrechte Spannung |
| $\tau_{\perp}$ | Scherspannung senkrecht zur Schweißnahtachse |
| $\tau_{\parallel}$ | Scherspannung parallel zur Schweißnahtachse |
| Ut | Ausnutzung |
| $Ut_c$ | Schätzung der Schweißnahtkapazität |
| ◢ | Kehlnaht |
| $f_u$ | Grenzfestigkeit der Schweißnaht |
| $\beta_w$ | Korrelationsfaktor nach EN 1993-1-8 Tab. 4.1 |
| $\sigma_{w,Rd}$ | Tragfähigkeit der Schweißnaht |
| 0.9 σ | Senkrechter Spannungswiderstand - 0.9*fu / γM2 |

## Beulen

**Die Beulanalyse wurde nicht berechnet.**

## Normeinstellungen

| Position | Wert | Einheit | Bezug |
|---|---|---|---|
| Sicherheitsfaktor $\gamma_{M0}$ | 1,00 | - | EN 1993-1-1 – 6.1 |
| Sicherheitsfaktor $\gamma_{M1}$ | 1,00 | - | EN 1993-1-1 – 6.1 |
| Sicherheitsfaktor $\gamma_{M2}$ | 1,25 | - | EN 1993-1-1 – 6.1 |
| Sicherheitsfaktor $\gamma_{M3}$ | 1,25 | - | EN 1993-1-8 – Table 2.1 |
| Sicherheitsfaktor $\gamma_{C}$ | 1,50 | - | EN 1992-1-1 – 2.4.2.4 |
| Sicherheitsfaktor $\gamma_{Inst}$ | 1,20 | - | EN 1992-4 – Table 4.1 |
| Verbindungskoeffizient βj | 0,67 | - | EN 1993-1-8 – 6.2.5(7) |
| Wirksame Fläche - Einfluss der Netzgröße | 0,10 | - | |
| Reibungsbeiwert - Beton | 0,25 | - | EN 1993-1-8 |
| Reibungskoeffizient bei gleitfesten Verbindungen | 0,30 | - | EN 1993-1-8 – Table 3.7 |
| Plastische Dehnung - Grenzwert | 0,05 | - | EN 1993-1-5 |
| Konstruktionsregeln | Ja | | |
| Distance between bolts [d0] | 2,20 | - | EN 1993-1-8 – Table 3.3 |
| Distance between bolts and edge [d0] | 1,20 | - | EN 1993-1-8 – Table 3.3 |
| Nachweis der Tragfähigkeit bei Betonausbruch | Beide | | |
| Berechnetes αb für Lochleibungsnachweis anwenden. | Ja | | EN 1993-1-8 – Table 3.4 |
| Gerissener Beton | Ja | | EN 1992-4 |
| Überprüfen der lokalen Verformung | Ja | | |
| Lokale Verformung - Grenzwert | 0,03 | - | CIDECT DG 1, 3 – 1.1 |
| Geometrische Nichtlinearität (GMNA) | Ja | | Analyse mit großen Verformungen für Verbindungen mit Hohlprofilen |
| Ausgesteiftes System | Nein | | EN 1993-1-8 – 5.2.2.5 |

| | |
|---|---|
| **Projekt:** | **IdeaStatiCa-Stadion_Fazanerija_JK-5_BR - 80** |
| **Projektnummer:** | **Detail D4-O1** |
| **Autor:** | **mag. Igor Gorup dipl.ing.** |

## Projektdaten

| | |
|---|---|
| Projektname | IdeaStatiCa-Stadion_Fazanerija_JK-5_BR - 80 |
| Projektnummer | Detail D4-O1 |
| Autor | mag. Igor Gorup dipl.ing. |
| Beschreibung | |
| Datum | 14.06.2025 |
| Norm | EN |

## Material

| | |
|---|---|
| Stahl | Baustahl S 355, S 355 |

# Projektposition 80

## Bemessung

| | |
|---|---|
| Name | 80 |
| Beschreibung | |
| Berechnung | Spannung, Dehnung/ Lasten im Gleichgewicht |

### Bauteile

**Geometrie**

| Name | Querschnitt | β – Rotation [°] | Y - Rotation [°] | α - Rotation [°] | Abstand ex [mm] | Abstand ey [mm] | Abstand ez [mm] |
|---|---|---|---|---|---|---|---|
| 91 | 295 - IPE200 | 0,0 | 0,0 | -180,0 | 0 | 0 | -100 |
| 254 | 288 - IPE400 | 90,0 | 3,5 | 180,0 | 0 | 0 | 0 |
| 258 | 288 - IPE400 | 90,0 | 3,5 | 180,0 | 0 | 0 | 0 |
| 297 | 23 - RO101.6X4 | -9,0 | 0,0 | -180,0 | 0 | 0 | 0 |
| 345 | 265 - HEB260 | 0,0 | 90,0 | -90,0 | 0 | 0 | 0 |

**Auflager und Kräfte**

| Name | Auflager | Kräfte in | X [mm] |
|---|---|---|---|
| 91 / ende | | Position | 0 |
| 254 / ende | | Position | 0 |
| 258 / anfang | | Position | 0 |
| 297 / ende | | Position | 0 |
| 345 / anfang | N-Vy-Vz-Mx-My-Mz | Position | 0 |
| 345 / ende | | Position | 0 |

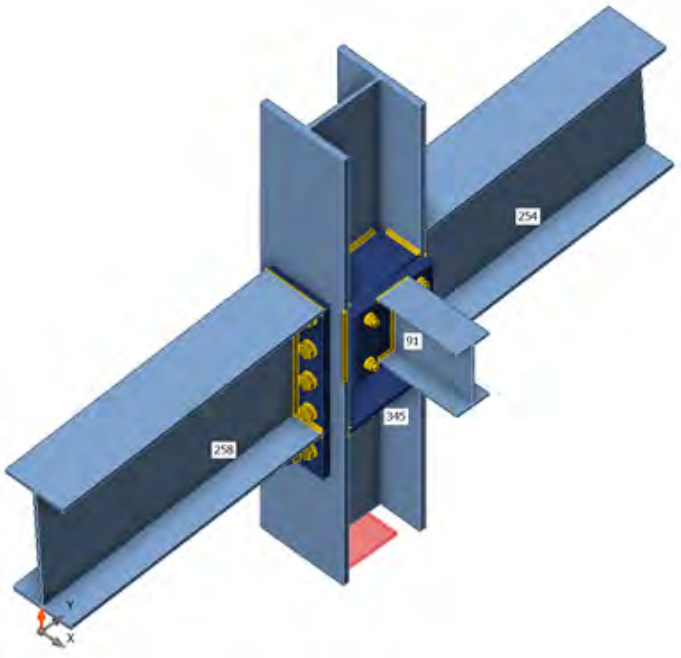

## Querschnitte

| Name | Material |
|---|---|
| 295 - IPE200 | S 355 |
| 288 - IPE400 | Baustahl S 355 |
| 23 - RO101.6X4 | Baustahl S 355 |
| 265 - HEB260 | Baustahl S 355 |

## Schrauben

| Name | Durchmesser [mm] | $f_y$ [MPa] | $f_u$ [MPa] | Bruttofläche [$mm^2$] |
|---|---|---|---|---|
| M24 8.8 | 24 | 640,0 | 800,0 | 452 |
| M16 8.8 | 16 | 640,0 | 800,0 | 201 |
| M12 8.8 | 12 | 640,0 | 800,0 | 113 |

## Lasteinwirkungen (Kräfte im Gleichgewicht)

| Name | Bauteil | N [kN] | Vy [kN] | Vz [kN] | Mx [kNm] | My [kNm] | Mz [kNm] |
|---|---|---|---|---|---|---|---|
| CO11(37) | 91 / Ende | -17,2 | -0,2 | 14,2 | 0,0 | -15,5 | -0,3 |
| | 254 / Ende | -562,2 | 1,6 | 105,3 | -0,2 | -233,4 | 3,3 |
| | 258 / Anfang | 467,4 | 1,9 | 244,4 | -4,1 | 308,4 | -3,5 |
| | 297 / Anfang | 5,9 | 0,0 | 0,8 | 0,1 | 0,0 | 0,0 |
| | 345 / Anfang | 976,9 | 7,7 | 55,9 | -0,1 | -21,6 | -11,5 |
| | 345 / Ende | -607,6 | 0,1 | 18,4 | -0,2 | -53,5 | 0,3 |
| CO11(38) | 91 / Ende | 2,7 | 0,1 | 7,9 | 0,0 | -13,2 | 0,2 |
| | 254 / Ende | 70,2 | -1,8 | -13,2 | 0,1 | 25,6 | -3,7 |
| | 258 / Anfang | -60,3 | -1,6 | -81,4 | -2,5 | -98,8 | 3,2 |
| | 297 / Anfang | -3,1 | 0,0 | 0,5 | 0,0 | 0,0 | 0,0 |
| | 345 / Anfang | -162,1 | 3,7 | -3,8 | 0,0 | 71,5 | -10,7 |
| | 345 / Ende | 75,4 | 0,0 | -0,6 | 0,0 | 1,7 | 0,0 |
| CO11(39) | 91 / Ende | -6,1 | 0,0 | 16,7 | 0,0 | -23,6 | 0,0 |
| | 254 / Ende | -146,6 | -1,6 | 27,2 | 0,1 | -61,7 | -3,0 |
| | 258 / Anfang | 120,0 | -1,5 | 44,6 | -5,1 | 57,2 | 2,7 |
| | 297 / Anfang | -2,6 | 0,0 | 0,6 | 0,0 | 0,0 | 0,0 |
| | 345 / Anfang | 253,1 | 11,7 | 16,2 | 0,0 | 20,3 | -18,2 |
| | 345 / Ende | -162,5 | -0,1 | 5,6 | -0,1 | -15,8 | -0,4 |
| CO9(40) | 91 / Ende | -4,9 | -0,1 | -2,4 | 0,0 | 9,1 | -0,2 |
| | 254 / Ende | 3,9 | 2,1 | -0,6 | -0,1 | 5,4 | 6,1 |
| | 258 / Anfang | -3,7 | 2,2 | 70,3 | -1,3 | 85,9 | -6,0 |
| | 297 / Anfang | -2,1 | 0,0 | 0,0 | 0,0 | 0,0 | 0,0 |
| | 345 / Anfang | 73,8 | 0,2 | -5,0 | 0,0 | -100,1 | 9,0 |
| | 345 / Ende | -6,6 | 0,5 | -3,2 | 0,0 | 8,8 | 1,4 |
| CO11(41) | 91 / Ende | -5,4 | -0,2 | 15,9 | 0,0 | -21,8 | -0,2 |
| | 254 / Ende | -559,3 | -1,4 | 105,4 | 0,1 | -234,3 | -2,7 |
| | 258 / Anfang | 463,4 | -1,2 | 229,7 | -3,3 | 290,8 | 2,6 |
| | 297 / Anfang | -1,9 | 0,0 | 0,6 | 0,1 | 0,0 | 0,0 |
| | 345 / Anfang | 963,4 | 10,1 | 56,2 | -0,1 | -1,6 | -17,7 |
| | 345 / Ende | -606,8 | -0,2 | 18,9 | -0,1 | -55,0 | -0,9 |
| CO11(42) | 91 / Ende | -10,3 | 0,0 | 11,9 | 0,0 | -15,4 | 0,0 |
| | 254 / Ende | -108,7 | 1,1 | 20,7 | 0,0 | -48,1 | 1,6 |
| | 258 / Anfang | 90,2 | 1,1 | -5,7 | -5,3 | -2,8 | -1,9 |
| | 297 / Anfang | 3,1 | 0,0 | 0,8 | 0,0 | 0,0 | 0,0 |
| | 345 / Anfang | 141,7 | 5,0 | 12,9 | 0,1 | 65,5 | -9,9 |
| | 345 / Ende | -113,0 | 0,0 | 5,2 | -0,1 | -14,6 | -0,1 |
| CO11(43) | 91 / Ende | -16,8 | -0,2 | 15,1 | 0,0 | -16,9 | -0,3 |
| | 254 / Ende | -434,9 | 1,6 | 81,6 | -0,1 | -179,3 | 3,4 |
| | 258 / Anfang | 360,9 | 1,9 | 212,3 | -4,7 | 266,5 | -3,7 |
| | 297 / Anfang | 5,5 | 0,0 | 0,8 | 0,1 | 0,0 | 0,0 |
| | 345 / Anfang | 786,3 | 7,7 | 43,2 | -0,1 | -48,4 | -12,3 |
| | 345 / Ende | -472,8 | 0,1 | 13,5 | -0,2 | -38,8 | 0,2 |
| CO11(44) | 91 / Ende | -1,1 | 0,1 | 13,3 | 0,0 | -20,6 | 0,1 |
| | 254 / Ende | -140,8 | -1,8 | 27,6 | 0,1 | -63,8 | -3,8 |
| | 258 / Anfang | 115,3 | -1,6 | -4,4 | -4,4 | -0,7 | 3,3 |
| | 297 / Anfang | -2,5 | 0,0 | 0,6 | 0,0 | 0,0 | 0,0 |
| | 345 / Anfang | 187,6 | 7,1 | 16,7 | 0,0 | 84,3 | -15,8 |

| Name | Bauteil | N [kN] | Vy [kN] | Vz [kN] | Mx [kNm] | My [kNm] | Mz [kNm] |
|---|---|---|---|---|---|---|---|
| | 345 / Ende | -148,9 | -0,1 | 7,1 | -0,1 | -19,8 | -0,5 |
| CO11(45) | 91 / Ende | -6,6 | -0,1 | 17,5 | 0,0 | -24,5 | -0,1 |
| | 254 / Ende | -214,6 | -1,4 | 40,3 | 0,1 | -89,3 | -2,5 |
| | 258 / Anfang | 176,6 | -1,3 | 96,6 | -5,1 | 121,6 | 2,2 |
| | 297 / Anfang | -1,9 | 0,0 | 0,6 | 0,0 | 0,0 | 0,0 |
| | 345 / Anfang | 394,7 | 11,3 | 22,2 | 0,0 | -12,3 | -19,0 |
| | 345 / Ende | -237,6 | -0,1 | 7,1 | -0,1 | -20,0 | -0,5 |
| CO11(46) | 91 / Ende | -10,4 | 0,0 | 11,9 | 0,0 | -15,2 | 0,0 |
| | 254 / Ende | -143,3 | 1,1 | 27,4 | 0,0 | -62,9 | 1,7 |
| | 258 / Anfang | 119,1 | 1,1 | 8,4 | -5,4 | 14,8 | -2,0 |
| | 297 / Anfang | 3,3 | 0,0 | 0,8 | 0,0 | 0,0 | 0,0 |
| | 345 / Anfang | 199,2 | 4,8 | 15,9 | 0,1 | 66,5 | -9,7 |
| | 345 / Ende | -149,4 | 0,0 | 6,5 | -0,1 | -18,4 | -0,1 |
| CO11(28) | 91 / Ende | -15,5 | -0,2 | 11,7 | 0,0 | -11,4 | -0,3 |
| | 254 / Ende | -562,2 | 1,5 | 105,3 | -0,2 | -233,3 | 3,2 |
| | 258 / Anfang | 467,7 | 1,8 | 245,0 | -2,6 | 309,1 | -3,3 |
| | 297 / Anfang | 6,0 | 0,0 | 0,8 | 0,1 | 0,0 | 0,0 |
| | 345 / Anfang | 975,0 | 6,1 | 55,7 | -0,1 | -22,3 | -9,0 |
| | 345 / Ende | -607,6 | 0,2 | 18,3 | -0,2 | -53,5 | 0,4 |
| CO11(29) | 91 / Ende | 1,1 | 0,1 | 10,4 | 0,0 | -17,2 | 0,2 |
| | 254 / Ende | 70,3 | -1,8 | -13,2 | 0,1 | 25,5 | -3,7 |
| | 258 / Anfang | -60,7 | -1,6 | -83,0 | -4,1 | -100,6 | 3,1 |
| | 297 / Anfang | -3,2 | 0,0 | 0,5 | 0,0 | 0,0 | 0,0 |
| | 345 / Anfang | -161,1 | 5,4 | -3,6 | 0,0 | 73,6 | -13,1 |
| | 345 / Ende | 75,4 | 0,1 | -0,5 | -0,1 | 1,5 | -0,1 |
| CO11(30) | 91 / Ende | -9,3 | 0,1 | 12,3 | 0,0 | -16,2 | 0,0 |
| | 254 / Ende | 29,7 | 1,1 | -6,2 | 0,1 | 10,5 | 1,5 |
| | 258 / Anfang | -25,2 | 1,0 | -57,8 | -5,9 | -69,4 | -1,9 |
| | 297 / Anfang | 2,0 | 0,0 | 0,7 | 0,0 | 0,0 | 0,0 |
| | 345 / Anfang | -84,3 | 5,2 | -0,6 | 0,1 | 59,8 | -10,2 |
| | 345 / Ende | 33,1 | 0,0 | 0,4 | -0,1 | -1,0 | -0,1 |
| CO11(31) | 91 / Ende | -3,7 | -0,2 | 13,4 | 0,0 | -17,8 | -0,2 |
| | 254 / Ende | -559,3 | -1,4 | 105,4 | 0,1 | -234,3 | -2,8 |
| | 258 / Anfang | 463,7 | -1,3 | 230,4 | -1,9 | 291,6 | 2,8 |
| | 297 / Anfang | -1,9 | 0,0 | 0,7 | 0,1 | 0,0 | 0,0 |
| | 345 / Anfang | 961,5 | 8,5 | 55,9 | -0,1 | -2,4 | -15,2 |
| | 345 / Ende | -606,8 | -0,2 | 18,9 | -0,1 | -55,0 | -0,8 |
| CO11(34) | 91 / Ende | -3,0 | 0,0 | 13,8 | 0,0 | -20,3 | 0,0 |
| | 254 / Ende | -384,7 | -1,6 | 73,5 | 0,1 | -164,9 | -3,5 |
| | 258 / Anfang | 319,1 | -1,5 | 107,4 | -3,6 | 139,8 | 3,2 |
| | 297 / Anfang | -1,9 | 0,0 | 0,6 | 0,0 | 0,0 | 0,0 |
| | 345 / Anfang | 610,6 | 8,2 | 39,4 | 0,0 | 67,7 | -15,9 |
| | 345 / Ende | -411,6 | -0,2 | 14,9 | -0,1 | -42,6 | -0,8 |
| CO11(36) | 91 / Ende | 0,6 | 0,1 | 11,1 | 0,0 | -17,1 | 0,2 |
| | 254 / Ende | 31,9 | -1,8 | -6,1 | 0,1 | 9,7 | -3,8 |
| | 258 / Anfang | -28,6 | -1,7 | -68,5 | -3,4 | -82,3 | 3,3 |
| | 297 / Anfang | -3,0 | 0,0 | 0,6 | 0,0 | 0,0 | 0,0 |
| | 345 / Anfang | -96,3 | 5,8 | 0,0 | 0,0 | 74,9 | -13,7 |
| | 345 / Ende | 33,4 | 0,0 | 0,8 | -0,1 | -2,2 | -0,1 |

| Name | Bauteil | N [kN] | Vy [kN] | Vz [kN] | Mx [kNm] | My [kNm] | Mz [kNm] |
|---|---|---|---|---|---|---|---|
| CO11(22) | 91 / Ende | -1,5 | 0,0 | 11,4 | 0,0 | -16,3 | 0,0 |
| | 254 / Ende | -315,9 | -1,7 | 60,4 | 0,0 | -135,5 | -3,6 |
| | 258 / Anfang | 261,6 | -1,6 | 80,8 | -2,0 | 106,4 | 3,4 |
| | 297 / Anfang | -1,9 | 0,0 | 0,6 | 0,0 | 0,0 | 0,0 |
| | 345 / Anfang | 494,4 | 6,8 | 33,1 | 0,0 | 64,0 | -13,8 |
| | 345 / Ende | -338,2 | -0,2 | 12,3 | 0,0 | -35,0 | -0,6 |
| CO11(24) | 91 / Ende | -12,1 | 0,0 | 14,1 | 0,0 | -18,1 | 0,0 |
| | 254 / Ende | -41,8 | 1,2 | 7,2 | 0,0 | -18,1 | 1,9 |
| | 258 / Anfang | 34,4 | 1,2 | -12,3 | -6,3 | -13,2 | -2,2 |
| | 297 / Anfang | 2,4 | 0,0 | 0,7 | 0,0 | 0,0 | 0,0 |
| | 345 / Anfang | 55,3 | 7,3 | 5,8 | 0,1 | 37,6 | -11,6 |
| | 345 / Ende | -45,2 | 0,0 | 2,3 | -0,1 | -6,3 | -0,1 |
| CO11(26) | 91 / Ende | -1,0 | 0,1 | 13,6 | 0,0 | -21,2 | 0,2 |
| | 254 / Ende | 32,0 | -1,8 | -6,1 | 0,1 | 9,6 | -3,8 |
| | 258 / Anfang | -28,9 | -1,7 | -70,0 | -5,0 | -84,1 | 3,2 |
| | 297 / Anfang | -3,1 | 0,0 | 0,6 | 0,0 | 0,0 | 0,0 |
| | 345 / Anfang | -95,3 | 7,5 | 0,3 | 0,0 | 77,0 | -16,1 |
| | 345 / Ende | 33,5 | 0,0 | 0,9 | -0,1 | -2,4 | -0,1 |
| CO11(27) | 91 / Ende | 0,4 | 0,1 | 10,8 | 0,0 | -16,6 | 0,1 |
| | 254 / Ende | -106,4 | -1,8 | 20,8 | 0,1 | -48,9 | -3,9 |
| | 258 / Anfang | 86,7 | -1,7 | -16,9 | -2,8 | -16,3 | 3,5 |
| | 297 / Anfang | -2,5 | 0,0 | 0,6 | 0,0 | 0,0 | 0,0 |
| | 345 / Anfang | 129,2 | 5,6 | 13,4 | 0,0 | 81,2 | -13,5 |
| | 345 / Ende | -112,6 | -0,1 | 5,7 | -0,1 | -15,9 | -0,3 |
| CO11(14) | 91 / Ende | -5,5 | 0,1 | 6,5 | 0,0 | -8,3 | 0,1 |
| | 254 / Ende | 68,0 | 1,1 | -13,4 | 0,1 | 26,6 | 1,6 |
| | 258 / Anfang | -56,7 | 1,1 | -69,5 | -3,5 | -84,3 | -1,9 |
| | 297 / Anfang | 1,9 | 0,0 | 0,5 | 0,0 | 0,0 | 0,0 |
| | 345 / Anfang | -151,3 | 1,4 | -4,7 | 0,1 | 54,6 | -4,7 |
| | 345 / Ende | 75,0 | 0,0 | -1,1 | -0,1 | 3,1 | -0,1 |
| CO11(15) | 91 / Ende | -5,9 | -0,2 | 16,7 | 0,0 | -22,9 | -0,2 |
| | 254 / Ende | -432,2 | -1,3 | 81,7 | 0,1 | -180,3 | -2,4 |
| | 258 / Anfang | 357,2 | -1,2 | 198,2 | -3,9 | 249,5 | 2,2 |
| | 297 / Anfang | -1,6 | 0,0 | 0,7 | 0,0 | 0,0 | 0,0 |
| | 345 / Anfang | 773,3 | 10,1 | 43,6 | -0,1 | -29,0 | -18,4 |
| | 345 / Ende | -472,1 | -0,2 | 14,0 | -0,1 | -40,3 | -0,7 |
| CO11(17) | 91 / Ende | -1,2 | 0,1 | 13,3 | 0,0 | -20,6 | 0,1 |
| | 254 / Ende | -106,3 | -1,8 | 20,9 | 0,1 | -49,0 | -3,8 |
| | 258 / Anfang | 86,4 | -1,7 | -18,4 | -4,4 | -18,2 | 3,4 |
| | 297 / Anfang | -2,6 | 0,0 | 0,6 | 0,0 | 0,0 | 0,0 |
| | 345 / Anfang | 130,2 | 7,2 | 13,6 | 0,0 | 83,3 | -15,9 |
| | 345 / Ende | -112,5 | -0,1 | 5,7 | -0,1 | -16,1 | -0,4 |
| CO11(18) | 91 / Ende | -15,1 | -0,2 | 12,6 | 0,0 | -12,9 | -0,3 |
| | 254 / Ende | -434,9 | 1,6 | 81,6 | -0,1 | -179,3 | 3,4 |
| | 258 / Anfang | 361,2 | 1,8 | 212,8 | -3,2 | 267,1 | -3,5 |
| | 297 / Anfang | 5,5 | 0,0 | 0,8 | 0,1 | 0,0 | 0,0 |
| | 345 / Anfang | 784,2 | 6,1 | 42,9 | -0,1 | -49,0 | -9,9 |
| | 345 / Ende | -472,8 | 0,1 | 13,5 | -0,1 | -38,8 | 0,3 |
| CO11(5) | 91 / Ende | -3,4 | 0,0 | 15,5 | 0,0 | -23,2 | 0,1 |

| Name | Bauteil | N [kN] | Vy [kN] | Vz [kN] | Mx [kNm] | My [kNm] | Mz [kNm] |
|---|---|---|---|---|---|---|---|
| | 254 / Ende | -39,5 | -1,7 | 7,3 | 0,1 | -19,0 | -3,5 |
| | 258 / Anfang | 30,8 | -1,6 | -24,8 | -5,4 | -28,4 | 3,0 |
| | 297 / Anfang | -2,9 | 0,0 | 0,6 | 0,0 | 0,0 | 0,0 |
| | 345 / Anfang | 43,9 | 9,6 | 6,6 | 0,0 | 55,2 | -17,6 |
| | 345 / Ende | -44,7 | 0,0 | 2,8 | -0,1 | -7,8 | -0,3 |
| CO11(6) | 91 / Ende | -6,2 | -0,1 | 17,0 | 0,0 | -23,4 | -0,1 |
| | 254 / Ende | -259,9 | -1,3 | 49,1 | 0,1 | -107,6 | -2,3 |
| | 258 / Anfang | 214,2 | -1,2 | 131,6 | -4,5 | 165,0 | 2,0 |
| | 297 / Anfang | -1,5 | 0,0 | 0,7 | 0,0 | 0,0 | 0,0 |
| | 345 / Anfang | 488,4 | 10,3 | 26,3 | -0,1 | -34,6 | -18,5 |
| | 345 / Ende | -287,7 | -0,1 | 8,0 | -0,1 | -22,8 | -0,5 |

## Fehlende Lasten

| Name | X [kN] | Y [kN] | Z [kN] | Mx [kNm] | My [kNm] | Mz [kNm] |
|---|---|---|---|---|---|---|
| CO11(37) | 0,0 | 0,3 | -0,5 | 0,0 | -1,7 | 0,0 |
| CO11(38) | 0,0 | 0,0 | 0,0 | 0,0 | 0,3 | 0,0 |
| CO11(39) | 0,0 | 0,0 | 0,0 | 0,0 | -0,6 | 0,0 |
| CO9(40) | -2,0 | -3,4 | 0,0 | 0,0 | -0,5 | 0,0 |
| CO11(41) | 0,0 | 0,3 | -0,2 | 0,0 | -0,5 | 0,0 |
| CO11(42) | 0,0 | 0,0 | -0,1 | 0,0 | -1,0 | 0,0 |
| CO11(43) | 0,0 | 0,1 | -0,3 | 0,0 | -1,7 | 0,0 |
| CO11(44) | 0,0 | 0,0 | 0,0 | 0,0 | -0,1 | 0,0 |
| CO11(45) | 0,0 | 0,0 | 0,0 | 0,0 | -0,7 | 0,0 |
| CO11(46) | 0,0 | 0,0 | -0,1 | 0,0 | -1,0 | 0,0 |
| CO11(28) | 0,0 | 0,3 | -0,5 | 0,0 | -1,6 | 0,0 |
| CO11(29) | 0,0 | 0,0 | 0,0 | 0,0 | 0,1 | 0,0 |
| CO11(30) | 0,0 | 0,0 | -0,1 | 0,0 | -0,9 | 0,0 |
| CO11(31) | 0,0 | 0,3 | -0,3 | 0,0 | -0,4 | 0,0 |
| CO11(34) | 0,0 | 0,2 | -0,1 | 0,0 | -0,3 | 0,0 |
| CO11(36) | 0,0 | 0,0 | 0,1 | 0,0 | 0,1 | 0,0 |
| CO11(22) | 0,0 | 0,1 | 0,0 | 0,0 | -0,1 | 0,0 |
| CO11(24) | 0,0 | 0,0 | -0,1 | 0,0 | -1,2 | 0,0 |
| CO11(26) | 0,0 | 0,0 | 0,1 | 0,0 | -0,1 | 0,0 |
| CO11(27) | 0,0 | 0,0 | 0,0 | 0,0 | 0,0 | 0,0 |
| CO11(14) | 0,0 | 0,0 | 0,0 | 0,0 | -0,6 | 0,0 |
| CO11(15) | 0,0 | 0,2 | -0,2 | 0,0 | -0,6 | 0,0 |
| CO11(17) | 0,0 | 0,0 | 0,0 | 0,0 | -0,1 | 0,0 |
| CO11(18) | 0,0 | 0,1 | -0,3 | 0,0 | -1,5 | 0,0 |
| CO11(5) | 0,0 | 0,0 | 0,1 | 0,0 | -0,3 | 0,0 |
| CO11(6) | 0,0 | 0,1 | 0,0 | 0,0 | -0,6 | 0,0 |

# Nachweis

## Übersicht

| Name | Wert | Nachweisstatus |
|---|---|---|
| Berechnung | 100,0% | OK |
| Platten | 0,3 < 5,0% | OK |
| Lokale Verformung | 0,0 < 3% | OK |
| Schrauben | 88,4 < 100% | OK |
| Schweißnähte | 99,3 < 100% | OK |
| Beulen | Nicht berechnet | |

## Platten

| Name | Material | $t_p$ [mm] | Lasten | $\sigma_{Ed}$ [MPa] | $\varepsilon_{Pl}$ [%] | $\sigma_{c,Ed}$ [MPa] | Status |
|---|---|---|---|---|---|---|---|
| 91-bfl 1 | S 355 | 8,5 | CO11(45) | 355,2 | 0,1 | 0,0 | OK |
| 91-tfl 1 | S 355 | 8,5 | CO11(45) | 288,2 | 0,0 | 0,0 | OK |
| 91-w 1 | S 355 | 5,6 | CO11(45) | 159,8 | 0,0 | 0,0 | OK |
| 254-bfl 1 | Baustahl S 355 | 13,5 | CO11(41) | 200,0 | 0,0 | 0,0 | OK |
| 254-tfl 1 | Baustahl S 355 | 13,5 | CO11(37) | 284,7 | 0,0 | 0,0 | OK |
| 254-w 1 | Baustahl S 355 | 8,6 | CO11(37) | 261,7 | 0,0 | 0,0 | OK |
| 258-bfl 1 | Baustahl S 355 | 13,5 | CO11(43) | 355,1 | 0,0 | 0,0 | OK |
| 258-tfl 1 | Baustahl S 355 | 13,5 | CO11(37) | 289,1 | 0,0 | 0,0 | OK |
| 258-w 1 | Baustahl S 355 | 8,6 | CO11(37) | 335,3 | 0,0 | 0,0 | OK |
| 297 | Baustahl S 355 | 4,0 | CO11(37) | 19,7 | 0,0 | 0,0 | OK |
| 345-bfl 1 | Baustahl S 355 | 17,5 | CO11(15) | 355,3 | 0,1 | 73,0 | OK |
| 345-tfl 1 | Baustahl S 355 | 17,5 | CO11(28) | 342,5 | 0,0 | 61,6 | OK |
| 345-w 1 | Baustahl S 355 | 10,0 | CO11(37) | 323,3 | 0,0 | 97,6 | OK |
| Stirnblech1 | S 355 | 25,0 | CO11(41) | 303,9 | 0,0 | 65,4 | OK |
| Verstärkung1 | S 355 | 13,0 | CO11(37) | 306,5 | 0,0 | 0,0 | OK |
| Stirnblech2 | S 355 | 25,0 | CO11(41) | 355,2 | 0,1 | 89,7 | OK |
| Verstärkung2 | S 355 | 15,0 | CO11(37) | 323,1 | 0,1 | 0,0 | OK |
| Rippe1a | S 355 | 15,0 | CO11(37) | 252,6 | 0,0 | 0,0 | OK |
| Rippe1b | S 355 | 15,0 | CO11(28) | 242,0 | 0,0 | 0,0 | OK |
| Rippe1c | S 355 | 15,0 | CO11(37) | 294,7 | 0,0 | 0,0 | OK |
| Rippe1d | S 355 | 15,0 | CO11(31) | 216,4 | 0,0 | 0,0 | OK |
| Verschobene Stirnplatte1a | S 355 | 15,0 | CO11(45) | 355,3 | 0,1 | 40,8 | OK |
| Verschobene Stirnplatte1b | S 355 | 15,0 | CO11(45) | 355,7 | 0,3 | 40,8 | OK |
| Stirnblech3 | S 355 | 10,0 | CO11(15) | 40,0 | 0,0 | 6,1 | OK |

### Bemessungsdaten

| Material | $f_y$ [MPa] | $\varepsilon_{lim}$ [%] |
|---|---|---|
| S 355 | 355,0 | 5,0 |
| Baustahl S 355 | 355,0 | 5,0 |

**Erläuterung von Symbolen**

| | |
|---|---|
| $t_p$ | Plattendicke |
| $\sigma_{Ed}$ | Vergleichsspannung |
| $\varepsilon_{Pl}$ | Plastische Dehnung |
| $\sigma_{c,Ed}$ | Kontaktspannung |
| $f_y$ | Streckgrenze |
| $\varepsilon_{lim}$ | Grenzwert plastische Dehnung |

## Lokale Verformung

| Name | $d_0$ [mm] | Lasten | $\delta$ [mm] | $\delta_{lim}$ [mm] | $\delta/d_0$ [%] | Nachweisstatus |
|---|---|---|---|---|---|---|
| 297 | 102 | CO11(6) | 0 | 3 | 0,0 | OK |

**Erläuterung von Symbolen**

| | |
|---|---|
| $d_0$ | Querschnittsgröße |
| $\delta$ | Lokale Verformung im Querschnitt |
| $\delta_{lim}$ | Zulässige Verformung |

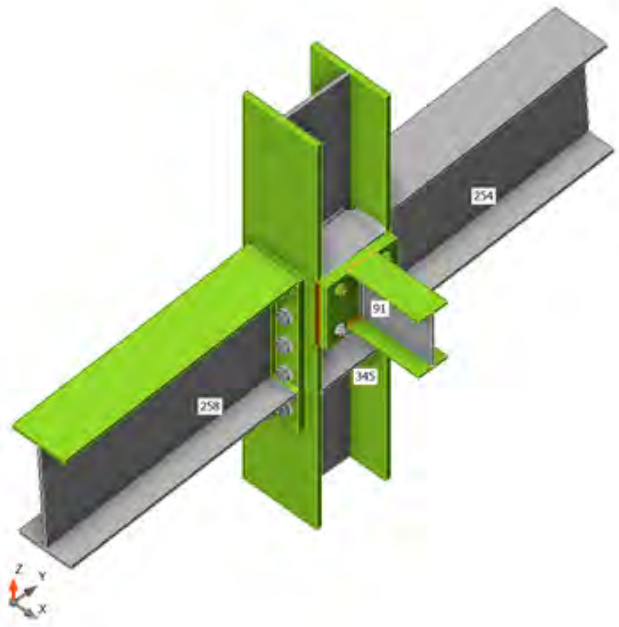


*Gesamt, CO11(45)*

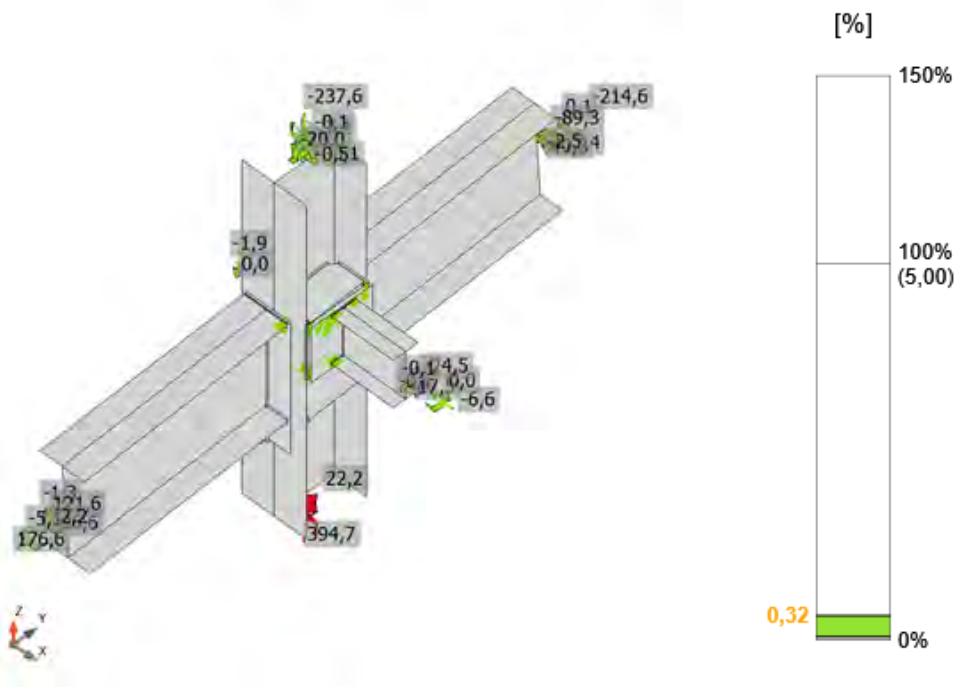


*Dehnung, CO11(45)*

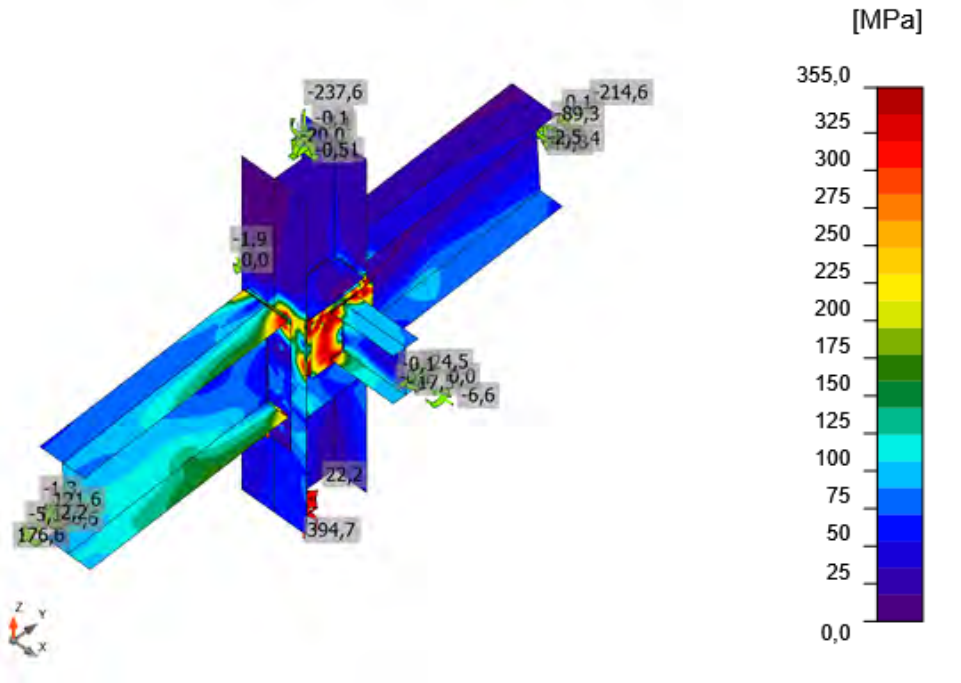


*Vergleichsspannung, CO11(45)*

## Schrauben

| Form | Position | Klasse | Lasten | $F_{t,Ed}$ [kN] | $F_{v,Ed}$ [kN] | $F_{b,Rd}$ [kN] | $Ut_t$ [%] | $Ut_s$ [%] | $Ut_{ts}$ [%] | Konstruktionsregeln | Status |
|---|---|---|---|---|---|---|---|---|---|---|---|
| 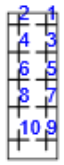 | B1 | M24 8.8 - 1 | CO11(28) | 121,7 | 1,9 | 301,5 | 59,9 | 1,4 | 44,2 | OK | OK |
| | B2 | M24 8.8 - 1 | CO11(41) | 125,8 | 4,6 | 301,5 | 61,8 | 3,4 | 47,6 | OK | OK |
| | B3 | M24 8.8 - 1 | CO11(28) | 29,0 | 6,5 | 411,6 | 14,2 | 4,8 | 14,9 | OK | OK |
| | B4 | M24 8.8 - 1 | CO11(28) | 25,9 | 8,2 | 411,6 | 12,8 | 6,1 | 15,2 | OK | OK |
| | B5 | M24 8.8 - 1 | CO11(28) | 6,8 | 12,9 | 411,6 | 3,4 | 9,5 | 11,9 | OK | OK |
| | B6 | M24 8.8 - 1 | CO11(37) | 5,6 | 15,6 | 411,6 | 2,8 | 11,5 | 13,5 | OK | OK |
| | B7 | M24 8.8 - 1 | CO11(14) | 38,3 | 4,1 | 362,0 | 18,8 | 3,0 | 16,5 | OK | OK |
| | B8 | M24 8.8 - 1 | CO11(38) | 34,9 | 0,9 | 411,6 | 17,2 | 0,7 | 12,9 | OK | OK |
| | B9 | M24 8.8 - 1 | CO11(31) | 3,3 | 26,5 | 411,6 | 1,6 | 19,6 | 20,7 | OK | OK |
| | B10 | M24 8.8 - 1 | CO11(41) | 2,9 | 31,0 | 411,6 | 1,4 | 22,9 | 23,9 | OK | OK |
| | B11 | M24 8.8 - 1 | CO11(37) | 179,8 | 6,9 | 324,2 | 88,4 | 5,1 | 68,2 | OK | OK |
| | B12 | M24 8.8 - 1 | CO11(28) | 166,2 | 16,9 | 324,2 | 81,8 | 12,5 | 70,9 | OK | OK |
| | B13 | M24 8.8 - 1 | CO11(37) | 85,2 | 14,2 | 411,6 | 41,9 | 10,5 | 40,4 | OK | OK |
| | B14 | M24 8.8 - 1 | CO11(37) | 73,6 | 21,2 | 411,6 | 36,2 | 15,7 | 41,5 | OK | OK |
| | B15 | M24 8.8 - 1 | CO11(28) | 18,0 | 18,0 | 411,6 | 8,8 | 13,3 | 19,6 | OK | OK |
| | B16 | M24 8.8 - 1 | CO11(37) | 21,6 | 23,9 | 411,6 | 10,6 | 17,6 | 25,2 | OK | OK |
| | B17 | M24 8.8 - 1 | CO11(38) | 35,0 | 11,4 | 411,6 | 17,2 | 8,4 | 20,7 | OK | OK |
| | B18 | M24 8.8 - 1 | CO11(30) | 82,8 | 2,1 | 411,6 | 40,7 | 1,6 | 30,6 | OK | OK |
| | B19 | M24 8.8 - 1 | CO11(29) | 70,9 | 15,8 | 411,6 | 34,9 | 11,7 | 36,6 | OK | OK |
| | B20 | M24 8.8 - 1 | CO11(29) | 91,8 | 12,1 | 411,6 | 45,2 | 8,9 | 41,2 | OK | OK |
| 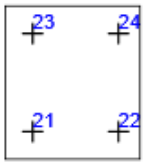 | B21 | M16 8.8 - 2 | CO9(40) | 26,5 | 2,4 | 196,0 | 29,4 | 4,0 | 25,0 | OK | OK |
| | B22 | M16 8.8 - 2 | CO11(45) | 73,5 | 9,1 | 190,4 | 81,3 | 15,1 | 73,2 | OK | OK |
| | B23 | M16 8.8 - 2 | CO9(40) | 28,7 | 3,1 | 196,0 | 31,8 | 5,2 | 27,9 | OK | OK |
| | B24 | M16 8.8 - 2 | CO11(45) | 72,5 | 8,1 | 188,9 | 80,1 | 13,4 | 70,6 | OK | OK |
| 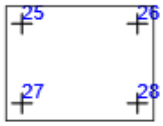 | B25 | M12 8.8 - 3 | CO11(26) | 1,3 | 1,3 | 62,0 | 2,7 | 4,0 | 5,9 | OK | OK |
| | B26 | M12 8.8 - 3 | CO11(41) | 1,4 | 1,6 | 60,3 | 2,8 | 4,9 | 6,9 | OK | OK |
| | B27 | M12 8.8 - 3 | CO11(26) | 0,9 | 1,3 | 117,6 | 1,8 | 4,1 | 5,4 | OK | OK |
| | B28 | M12 8.8 - 3 | CO11(26) | 1,6 | 1,5 | 60,3 | 3,2 | 4,7 | 7,0 | OK | OK |

**Bemessungsdaten**

| Klasse | $F_{t,Rd}$ [kN] | $B_{p,Rd}$ [kN] | $F_{v,Rd}$ [kN] |
|---|---|---|---|
| M24 8.8 - 1 | 203,3 | 491,2 | 135,6 |
| M16 8.8 - 2 | 90,4 | 281,2 | 60,3 |
| M12 8.8 - 3 | 48,6 | 140,5 | 32,4 |

**Erläuterung von Symbolen**

| | |
|---|---|
| $F_{t,Ed}$ | Zugkraft |
| $F_{v,Ed}$ | Resultierende der Schraubenscherkräfte Vy und Vz in Scherebenen |
| $F_{b,Rd}$ | Lochleibungstragfähigkeit der Platte nach EN 1993-1-8 Tab. 3.4 |
| $Ut_t$ | Ausnutzung unter Zug |
| $Ut_s$ | Ausnutzung unter Schub |
| $Ut_{ts}$ | Interaktion von Zug und Schub EN_1993-1-8 Tabelle 3.4 |
| $F_{t,Rd}$ | Zugtragfähigkeit der Schraube nach EN 1993-1-8 Tabelle 3.4 |
| $B_{p,Rd}$ | Durchstanztragfähigkeit nach EN 1993-1-8 Tabelle 3.4 |
| $F_{v,Rd}$ | Schertragfähigkeit der Schraube nach EN 1993-1-8 Tabelle 3.4 |

## Schweißnähte

| Position | Kante | $T_w$ [mm] | L [mm] | Lasten | $\sigma_{w,Ed}$ [MPa] | $\varepsilon_{Pl}$ [%] | $\sigma_{\perp}$ [MPa] | $\tau_{\perp}$ [MPa] | $\tau_{\parallel}$ [MPa] | Ut [%] | $Ut_c$ [%] | Konstruktionsregeln | Status |
|---|---|---|---|---|---|---|---|---|---|---|---|---|---|
| Stirnblech1 | 254-bfl 1 | ◢ 6,0 ◣ | 180 | CO11(41) | 158,0 | 0,0 | 103,0 | 54,3 | 42,8 | 36,3 | 28,8 | OK | OK |
| | | ◢ 6,0 ◣ | 180 | CO11(26) | 136,8 | 0,0 | -90,0 | -56,2 | -19,7 | 31,4 | 17,0 | OK | OK |
| Stirnblech1 | 254-tfl 1 | ◢ 6,0 ◣ | 180 | CO11(37) | 426,9 | 0,0 | -203,0 | -186,1 | -111,3 | 98,0 | 75,6 | OK | OK |
| | | ◢ 6,0 ◣ | 180 | CO11(37) | 426,9 | 0,0 | -178,6 | 201,3 | 97,9 | 98,0 | 76,2 | OK | OK |
| Stirnblech1 | 254-w 1 | ◢ 6,0 ◣ | 384 | CO11(31) | 222,4 | 0,0 | 100,2 | 99,5 | -56,9 | 51,1 | 29,5 | OK | OK |
| | | ◢ 6,0 ◣ | 384 | CO11(28) | 204,0 | 0,0 | 96,2 | -94,2 | 43,9 | 46,8 | 26,7 | OK | OK |
| Stirnblech1 | Verstärkung1 | ◢ 6,0 ◣ | 129 | CO11(41) | 427,7 | 0,5 | -188,4 | -188,3 | 117,1 | 98,2 | 76,1 | OK | OK |
| | | ◢ 6,0 ◣ | 129 | CO11(41) | 427,7 | 0,5 | -188,5 | 188,5 | -116,7 | 98,2 | 75,8 | OK | OK |
| 254-tfl 1 | Verstärkung1 | ◢ 6,0 ◣ | 299 | CO11(41) | 427,1 | 0,1 | -109,7 | -108,5 | -212,1 | 98,0 | 63,5 | OK | OK |
| | | ◢ 6,0 ◣ | 299 | CO11(31) | 427,0 | 0,1 | -108,1 | 108,7 | 212,3 | 98,0 | 63,8 | OK | OK |
| Stirnblech2 | 258-bfl 1 | ◢ 6,0 ◣ | 180 | CO11(5) | 411,9 | 0,0 | -180,0 | -175,0 | -123,1 | 94,6 | 63,6 | OK | OK |
| | | ◢ 6,0 ◣ | 180 | CO11(26) | 426,9 | 0,0 | -242,4 | -182,4 | 88,8 | 98,0 | 58,2 | OK | OK |
| Stirnblech2 | 258-tfl 1 | ◢ 6,0 ◣ | 179 | CO11(37) | 427,2 | 0,2 | -180,6 | -208,2 | 81,2 | 98,1 | 72,1 | OK | OK |
| | | ◢ 6,0 ◣ | 179 | CO11(37) | 427,2 | 0,2 | -216,2 | 194,9 | -85,3 | 98,1 | 66,4 | OK | OK |
| Stirnblech2 | 258-w 1 | ◢ 6,0 ◣ | 386 | CO11(37) | 377,7 | 0,0 | 57,0 | 83,8 | 198,6 | 86,7 | 50,3 | OK | OK |
| | | ◢ 6,0 ◣ | 386 | CO11(37) | 286,2 | 0,0 | 115,4 | -125,0 | 85,1 | 65,7 | 46,4 | OK | OK |
| Stirnblech2 | Verstärkung2 | ◢ 8,0 ◣ | 130 | CO11(28) | 428,9 | 1,2 | -202,4 | -199,4 | 89,0 | 98,5 | 81,7 | OK | OK |
| | | ◢ 8,0 ◣ | 130 | CO11(37) | 429,4 | 1,5 | -200,9 | 204,5 | -78,6 | 98,6 | 84,3 | OK | OK |
| 258-tfl 1 | Verstärkung2 | ◢ 8,0 ◣ | 300 | CO11(37) | 427,0 | 0,1 | -121,9 | -101,5 | -213,4 | 98,0 | 64,5 | OK | OK |

| Position | Kante | $T_w$ [mm] | L [mm] | Lasten | $\sigma_{w,Ed}$ [MPa] | $\varepsilon_{Pl}$ [%] | $\sigma_{\perp}$ [MPa] | $\tau_{\perp}$ [MPa] | $\tau_{\parallel}$ [MPa] | Ut [%] | $Ut_c$ [%] | Konstruktionsregeln | Status |
|---|---|---|---|---|---|---|---|---|---|---|---|---|---|
| | | ◢ 8,0 ◣ | 300 | CO11(28) | 424,9 | 0,0 | -97,6 | 114,9 | 209,3 | 97,6 | 63,4 | OK | OK |
| 345-bfl 1 | Rippe1a | ◢ 6,0 ◣ | 101 | CO11(37) | 159,9 | 0,0 | 8,9 | 91,8 | 8,0 | 36,7 | 25,0 | OK | OK |
| | | ◢ 6,0 ◣ | 101 | CO11(37) | 329,1 | 0,0 | 169,1 | -148,9 | 66,4 | 75,6 | 45,4 | OK | OK |
| 345-w 1 | Rippe1a | ◢ 6,0 ◣ | 176 | CO11(28) | 87,2 | 0,0 | 47,0 | 30,7 | 29,3 | 20,0 | 14,3 | OK | OK |
| | | ◢ 6,0 ◣ | 176 | CO11(37) | 79,3 | 0,0 | -3,3 | -12,3 | -44,0 | 18,2 | 13,4 | OK | OK |
| 345-tfl 1 | Rippe1a | ◢ 6,0 ◣ | 101 | CO11(31) | 105,1 | 0,0 | 10,6 | 60,3 | 0,8 | 24,1 | 18,9 | OK | OK |
| | | ◢ 6,0 ◣ | 101 | CO11(31) | 237,6 | 0,0 | 129,5 | -114,4 | -11,7 | 54,5 | 32,0 | OK | OK |
| 345-bfl 1 | Rippe1b | ◢ 6,0 ◣ | 101 | CO11(28) | 305,7 | 0,0 | 146,0 | 142,0 | -62,2 | 70,2 | 41,0 | OK | OK |
| | | ◢ 6,0 ◣ | 100 | CO11(26) | 207,9 | 0,0 | -89,8 | 107,5 | -12,3 | 47,7 | 32,0 | OK | OK |
| 345-w 1 | Rippe1b | ◢ 6,0 ◣ | 176 | CO11(5) | 135,2 | 0,0 | 6,5 | 0,0 | -78,0 | 31,0 | 20,8 | OK | OK |
| | | ◢ 6,0 ◣ | 176 | CO11(5) | 109,3 | 0,0 | -2,6 | -3,8 | 63,0 | 25,1 | 15,9 | OK | OK |
| 345-tfl 1 | Rippe1b | ◢ 6,0 ◣ | 101 | CO11(28) | 267,3 | 0,0 | 121,8 | 130,7 | 42,3 | 61,4 | 34,0 | OK | OK |
| | | ◢ 6,0 ◣ | 100 | CO11(28) | 118,8 | 0,0 | 15,7 | -62,4 | 27,0 | 27,3 | 15,1 | OK | OK |
| 345-bfl 1 | Rippe1c | ◢ 6,0 ◣ | 101 | CO11(37) | 405,8 | 0,0 | -168,3 | -209,5 | 39,6 | 93,2 | 55,5 | OK | OK |
| | | ◢ 6,0 ◣ | 101 | CO11(37) | 427,2 | 0,2 | -219,2 | 209,0 | -33,6 | 98,1 | 67,7 | OK | OK |
| 345-w 1 | Rippe1c | ◢ 6,0 ◣ | 176 | CO11(37) | 160,2 | 0,0 | 16,6 | 2,8 | -92,0 | 36,8 | 26,1 | OK | OK |
| | | ◢ 6,0 ◣ | 176 | CO11(37) | 139,7 | 0,0 | -23,9 | 10,2 | 78,8 | 32,1 | 22,1 | OK | OK |
| 345-tfl 1 | Rippe1c | ◢ 6,0 ◣ | 101 | CO11(37) | 426,9 | 0,0 | -224,3 | -208,9 | -18,7 | 98,0 | 56,6 | OK | OK |
| | | ◢ 6,0 ◣ | 101 | CO11(28) | 385,0 | 0,0 | -173,4 | 198,3 | 9,0 | 88,4 | 47,7 | OK | OK |
| 345-bfl 1 | Rippe1d | ◢ 6,0 ◣ | 101 | CO11(31) | 409,4 | 0,0 | -222,3 | -198,5 | 0,4 | 94,0 | 56,0 | OK | OK |

| Position | Kante | $T_w$ [mm] | L [mm] | Lasten | $\sigma_{w,Ed}$ [MPa] | $\varepsilon_{Pl}$ [%] | $\sigma_{\perp}$ [MPa] | $\tau_{\perp}$ [MPa] | $\tau_{\parallel}$ [MPa] | Ut [%] | $Ut_c$ [%] | Konstruktionsregeln | Status |
|---|---|---|---|---|---|---|---|---|---|---|---|---|---|
| | | ◢ 6,0 ◣ | 101 | CO11(31) | 345,0 | 0,0 | -148,9 | 179,7 | 0,9 | 79,2 | 45,8 | OK | OK |
| 345-w 1 | Rippe1d | ◢ 6,0 ◣ | 176 | CO11(37) | 178,4 | 0,0 | 16,3 | 0,2 | 102,6 | 41,0 | 24,4 | OK | OK |
| | | ◢ 6,0 ◣ | 176 | CO11(37) | 181,8 | 0,0 | -20,8 | 4,6 | -104,1 | 41,7 | 26,2 | OK | OK |
| 345-tfl 1 | Rippe1d | ◢ 6,0 ◣ | 101 | CO11(31) | 389,1 | 0,0 | -173,9 | -200,2 | -17,3 | 89,3 | 46,6 | OK | OK |
| | | ◢ 6,0 ◣ | 101 | CO11(31) | 393,6 | 0,0 | -212,1 | 190,7 | 17,1 | 90,4 | 47,4 | OK | OK |
| Verschobene Stirnplatte1a | 345-tfl 1 | ◢ 6,0 ◣ | 218 | CO11(41) | 304,5 | 0,0 | 79,1 | 48,8 | 162,6 | 69,9 | 49,1 | OK | OK |
| | | ◢ 6,0 ◣ | 219 | CO11(45) | 427,4 | 0,3 | -273,8 | -183,8 | 46,0 | 98,1 | 85,0 | OK | OK |
| Verschobene Stirnplatte1a | 345-bfl 1 | ◢ 6,0 ◣ | 218 | CO11(45) | 428,5 | 1,0 | -316,4 | 161,9 | 40,4 | 98,4 | 80,6 | OK | OK |
| | | ◢ 6,0 ◣ | 219 | CO11(45) | 271,6 | 0,0 | -64,2 | -114,9 | -100,1 | 62,4 | 48,7 | OK | OK |
| Verschobene Stirnplatte1b | 91-bfl 1 | ◢ 4,0 ◣ | 99 | CO11(45) | 431,3 | 2,6 | 181,4 | 137,3 | 179,4 | 99,0 | 91,6 | OK | OK |
| | | ◢ 4,0 ◣ | 99 | CO11(45) | 430,8 | 2,3 | 223,0 | 161,5 | -138,5 | 98,9 | 95,2 | OK | OK |
| Verschobene Stirnplatte1b | 91-tfl 1 | ◢ 4,0 ◣ | 100 | CO11(45) | 432,5 | 3,3 | -192,2 | -188,7 | -120,2 | 99,3 | 94,1 | OK | OK |
| | | ◢ 4,0 ◣ | 100 | CO11(45) | 431,2 | 2,5 | -180,7 | 184,2 | -131,0 | 99,0 | 91,7 | OK | OK |
| Verschobene Stirnplatte1b | 91-w 1 | ◢ 4,0 ◣ | 189 | CO11(45) | 159,0 | 0,0 | 80,5 | -78,4 | -10,9 | 36,5 | 22,2 | OK | OK |
| | | ◢ 4,0 ◣ | 189 | CO11(45) | 155,3 | 0,0 | 75,7 | 77,9 | 8,1 | 35,7 | 22,0 | OK | OK |
| Stirnblech3 | 297 | ◢ 4,0 | 308 | CO11(37) | 22,7 | 0,0 | -12,6 | 7,9 | -7,5 | 5,2 | 5,2 | OK | OK |

**Bemessungsdaten**

| Material | $f_u$ [MPa] | $\beta_w$ [-] | $\sigma_{w,Rd}$ [MPa] | 0.9 σ [MPa] |
|---|---|---|---|---|
| S 355 | 490,0 | 0,90 | 435,6 | 352,8 |

**Erläuterung von Symbolen**

| | |
|---|---|
| $T_w$ | Nahtdicke a |
| L | Länge |
| $\sigma_{w,Ed}$ | Vergleichsspannung |
| $\varepsilon_{Pl}$ | Dehnung |
| $\sigma_{\perp}$ | Senkrechte Spannung |
| $\tau_{\perp}$ | Scherspannung senkrecht zur Schweißnahtachse |
| $\tau_{\parallel}$ | Scherspannung parallel zur Schweißnahtachse |
| Ut | Ausnutzung |
| $Ut_c$ | Schätzung der Schweißnahtkapazität |
| ◢ | Kehlnaht |
| $f_u$ | Grenzfestigkeit der Schweißnaht |
| $\beta_w$ | Korrelationsfaktor nach EN 1993-1-8 Tab. 4.1 |
| $\sigma_{w,Rd}$ | Tragfähigkeit der Schweißnaht |
| 0.9 σ | Senkrechter Spannungswiderstand - 0.9*fu / γM2 |

### Beulen

**Die Beulanalyse wurde nicht berechnet.**

## Normeinstellungen

| Position | Wert | Einheit | Bezug |
|---|---|---|---|
| Sicherheitsfaktor $\gamma_{M0}$ | 1,00 | - | EN 1993-1-1 – 6.1 |
| Sicherheitsfaktor $\gamma_{M1}$ | 1,00 | - | EN 1993-1-1 – 6.1 |
| Sicherheitsfaktor $\gamma_{M2}$ | 1,25 | - | EN 1993-1-1 – 6.1 |
| Sicherheitsfaktor $\gamma_{M3}$ | 1,25 | - | EN 1993-1-8 – Table 2.1 |
| Sicherheitsfaktor $\gamma_C$ | 1,50 | - | EN 1992-1-1 – 2.4.2.4 |
| Sicherheitsfaktor $\gamma_{Inst}$ | 1,20 | - | EN 1992-4 – Table 4.1 |
| Verbindungskoeffizient βj | 0,67 | - | EN 1993-1-8 – 6.2.5(7) |
| Wirksame Fläche - Einfluss der Netzgröße | 0,10 | - | |
| Reibungsbeiwert - Beton | 0,25 | - | EN 1993-1-8 |
| Reibungskoeffizient bei gleitfesten Verbindungen | 0,30 | - | EN 1993-1-8 – Table 3.7 |
| Plastische Dehnung - Grenzwert | 0,05 | - | EN 1993-1-5 |
| Konstruktionsregeln | Ja | | |
| Distance between bolts [d0] | 2,20 | - | EN 1993-1-8 – Table 3.3 |
| Distance between bolts and edge [d0] | 1,20 | - | EN 1993-1-8 – Table 3.3 |
| Nachweis der Tragfähigkeit bei Betonausbruch | Beide | | |
| Berechnetes αb für Lochleibungsnachweis anwenden. | Ja | | EN 1993-1-8 – Table 3.4 |
| Gerissener Beton | Ja | | EN 1992-4 |
| Überprüfen der lokalen Verformung | Ja | | |
| Lokale Verformung - Grenzwert | 0,03 | - | CIDECT DG 1, 3 – 1.1 |
| Geometrische Nichtlinearität (GMNA) | Ja | | Analyse mit großen Verformungen für Verbindungen mit Hohlprofilen |
| Ausgesteiftes System | Nein | | EN 1993-1-8 – 5.2.2.5 |

| | |
|---|---|
| **Projekt:** | **IdeaStatiCa-Stadion_Fazanerija_JK-5_BR - 1410** |
| **Projektnummer:** | **Detajl D6-O1** |
| **Autor:** | **mag. Igor Gorup dipl.ing.** |

## Projektdaten

| | |
|---|---|
| Projektname | IdeaStatiCa-Stadion_Fazanerija_JK-5_BR - 1410 |
| Projektnummer | Detajl D6-O1 |
| Autor | mag. Igor Gorup dipl.ing. |
| Beschreibung | |
| Datum | 14.06.2025 |
| Norm | EN |

## Material

| | |
|---|---|
| Stahl | Baustahl S 355, Baustahl S 235, S 355 |

# Projektposition 1410

## Bemessung

| | |
|---|---|
| Name | 1410 |
| Beschreibung | |
| Berechnung | Spannung, Dehnung/ Lasten im Gleichgewicht |

### Bauteile

#### Geometrie

| Name | Querschnitt | β – Rotation [°] | Y - Rotation [°] | α - Rotation [°] | Abstand ex [mm] | Abstand ey [mm] | Abstand ez [mm] |
|---|---|---|---|---|---|---|---|
| 492 | 294 - HEB260 | -146,3 | 90,0 | 56,3 | 100 | 0 | 0 |
| 493 | 364 - RHS80x80 | 90,0 | 0,0 | -180,0 | 0 | -90 | 0 |

#### Auflager und Kräfte

| Name | Auflager | Kräfte in | X [mm] |
|---|---|---|---|
| 492 / anfang | N-Vy-Vz-Mx-My-Mz | Position | 0 |
| 493 / ende | | Position | 0 |

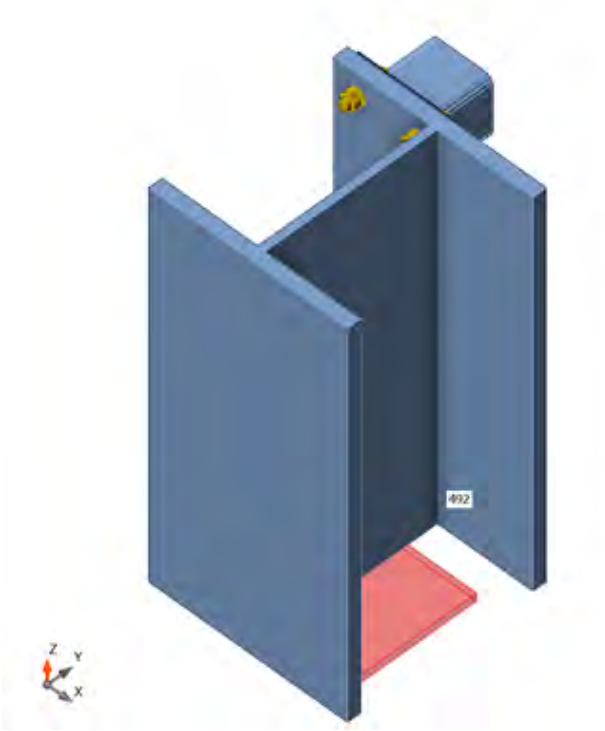


### Querschnitte

| Name | Material |
|---|---|
| 294 - HEB260 | Baustahl S 355 |
| 364 - RHS80x80 | Baustahl S 355 |

## Schrauben

| Name | Durchmesser [mm] | $f_y$ [MPa] | $f_u$ [MPa] | Bruttofläche [$mm^2$] |
|---|---|---|---|---|
| M12 8.8 | 12 | 640,0 | 800,0 | 113 |

## Lasteinwirkungen (Kräfte im Gleichgewicht)

| Name | Bauteil | N [kN] | Vy [kN] | Vz [kN] | Mx [kNm] | My [kNm] | Mz [kNm] |
|---|---|---|---|---|---|---|---|
| CO11(22) | 492 / Anfang | -601,1 | 15,4 | -6,7 | -0,1 | -26,8 | -15,2 |
| | 493 / Ende | -62,4 | -1,9 | 1,7 | 0,0 | 0,0 | 0,0 |
| CO11(23) | 492 / Anfang | 142,2 | 21,0 | 13,7 | -0,1 | 72,9 | -16,4 |
| | 493 / Ende | 16,1 | -2,6 | 1,0 | 0,0 | 0,0 | 0,0 |
| CO11(24) | 492 / Anfang | -500,3 | 14,7 | 0,3 | 0,0 | 7,4 | -13,7 |
| | 493 / Ende | -51,9 | 0,0 | 1,6 | 0,0 | 0,0 | 0,0 |
| CO11(25) | 492 / Anfang | -485,9 | 14,7 | -11,2 | -0,1 | -53,2 | -13,3 |
| | 493 / Ende | -51,7 | -3,1 | 1,6 | 0,0 | 0,0 | 0,0 |
| CO11(26) | 492 / Anfang | -549,4 | 18,5 | -2,4 | -0,1 | -7,2 | -22,3 |
| | 493 / Ende | -56,1 | -1,9 | 1,2 | 0,0 | 0,0 | 0,0 |
| CO11(27) | 492 / Anfang | 3,7 | 21,3 | 7,3 | 0,0 | 36,4 | -11,9 |
| | 493 / Ende | -0,3 | -1,6 | 1,4 | 0,1 | 0,0 | 0,0 |
| CO11(28) | 492 / Anfang | 95,2 | 19,4 | 11,3 | 0,0 | 58,8 | -10,9 |
| | 493 / Ende | 9,9 | -2,6 | 1,4 | 0,1 | 0,0 | 0,0 |
| CO11(29) | 492 / Anfang | -235,8 | 21,0 | -5,9 | -0,1 | -33,3 | -13,0 |
| | 493 / Ende | -26,7 | -1,7 | 1,5 | 0,1 | 0,0 | 0,0 |
| CO11(30) | 492 / Anfang | -499,5 | 19,9 | 0,8 | 0,0 | 8,5 | -16,0 |
| | 493 / Ende | -51,7 | 0,0 | 1,6 | 0,0 | 0,0 | 0,0 |
| CO9(12) | 492 / Anfang | -79,4 | -9,4 | -18,1 | 0,0 | -99,9 | 16,1 |
| | 493 / Ende | -11,8 | 0,0 | 0,0 | 0,0 | 0,0 | 0,0 |
| CO11(13) | 492 / Anfang | -401,3 | 28,6 | -1,8 | -0,1 | -9,6 | -25,7 |
| | 493 / Ende | -42,1 | -1,8 | 1,6 | 0,0 | 0,0 | 0,0 |
| CO11(14) | 492 / Anfang | -70,1 | 26,2 | 15,9 | -0,1 | 83,3 | -22,9 |
| | 493 / Ende | -5,8 | -2,7 | 1,4 | 0,0 | 0,0 | 0,0 |
| CO11(15) | 492 / Anfang | -468,6 | 26,8 | -6,5 | -0,1 | -32,6 | -25,7 |
| | 493 / Ende | -49,2 | -3,1 | 1,6 | 0,0 | 0,0 | 0,0 |
| CO11(16) | 492 / Anfang | 109,6 | 25,2 | 14,4 | -0,1 | 76,0 | -19,9 |
| | 493 / Ende | 12,3 | -2,6 | 1,3 | 0,1 | 0,0 | 0,0 |
| CO11(17) | 492 / Anfang | -120,7 | 28,4 | 11,5 | 0,0 | 59,0 | -24,2 |
| | 493 / Ende | -12,5 | -1,7 | 1,4 | 0,0 | 0,0 | 0,0 |
| CO11(18) | 492 / Anfang | -360,2 | 28,7 | -2,0 | -0,1 | -11,0 | -25,7 |
| | 493 / Ende | -38,6 | -1,8 | 1,6 | 0,0 | 0,0 | 0,0 |
| CO11(19) | 492 / Anfang | -45,5 | 14,8 | 11,7 | 0,0 | 61,8 | -11,1 |
| | 493 / Ende | -4,9 | -2,7 | 1,4 | 0,0 | 0,0 | 0,0 |
| CO11(20) | 492 / Anfang | -485,5 | 19,9 | -10,8 | -0,1 | -52,7 | -15,7 |
| | 493 / Ende | -51,6 | -3,1 | 1,6 | 0,0 | 0,0 | 0,0 |
| CO11(21) | 492 / Anfang | -500,9 | 27,8 | -2,1 | -0,1 | -8,2 | -28,0 |
| | 493 / Ende | -53,0 | -1,9 | 1,6 | 0,0 | 0,0 | 0,0 |
| CO11(4) | 492 / Anfang | -259,8 | 28,1 | 4,4 | 0,0 | 22,6 | -24,3 |
| | 493 / Ende | -27,8 | 0,0 | 1,5 | 0,0 | 0,0 | 0,0 |
| CO11(6) | 492 / Anfang | -583,0 | 27,7 | -1,8 | -0,1 | -5,3 | -27,9 |
| | 493 / Ende | -59,8 | -1,9 | 1,7 | 0,0 | 0,0 | 0,0 |
| CO11(9) | 492 / Anfang | -600,6 | 20,4 | -6,3 | -0,1 | -26,2 | -17,5 |
| | 493 / Ende | -62,3 | -1,9 | 1,7 | 0,0 | 0,0 | 0,0 |

### Fehlende Lasten

| Name | X [kN] | Y [kN] | Z [kN] | Mx [kNm] | My [kNm] | Mz [kNm] |
|---|---|---|---|---|---|---|
| CO11(22) | 13,4 | -69,2 | -602,8 | -26,2 | -13,8 | 5,5 |
| CO11(23) | 18,4 | 29,8 | 141,2 | 71,5 | -14,4 | -1,5 |
| CO11(24) | 14,7 | -51,5 | -501,9 | 7,4 | -12,4 | 4,6 |
| CO11(25) | 11,6 | -62,9 | -487,5 | -52,1 | -12,0 | 4,5 |
| CO11(26) | 16,6 | -58,4 | -550,7 | -6,9 | -20,6 | 4,9 |
| CO11(27) | 19,7 | 7,0 | 2,3 | 35,6 | -9,8 | 0,1 |
| CO11(28) | 16,8 | 21,2 | 93,9 | 57,7 | -9,0 | -0,9 |
| CO11(29) | 19,3 | -32,6 | -237,3 | -32,7 | -11,0 | 2,3 |
| CO11(30) | 19,9 | -50,9 | -501,1 | 8,4 | -14,2 | 4,6 |
| CO9(12) | -9,4 | -29,8 | -79,4 | -98,1 | 15,2 | 1,1 |
| CO11(13) | 26,8 | -43,9 | -402,8 | -9,4 | -22,9 | 3,7 |
| CO11(14) | 23,5 | 10,2 | -71,5 | 81,7 | -20,3 | 0,5 |
| CO11(15) | 23,7 | -55,7 | -470,2 | -32,0 | -23,1 | 4,3 |
| CO11(16) | 22,7 | 26,7 | 108,2 | 74,5 | -17,4 | -1,2 |
| CO11(17) | 26,8 | -1,0 | -122,1 | 57,9 | -21,4 | 1,1 |
| CO11(18) | 26,9 | -40,6 | -361,8 | -10,8 | -23,0 | 3,4 |
| CO11(19) | 12,0 | 6,8 | -46,9 | 60,6 | -9,7 | 0,5 |
| CO11(20) | 16,7 | -62,5 | -487,1 | -51,6 | -13,8 | 4,5 |
| CO11(21) | 25,9 | -55,1 | -502,5 | -8,0 | -25,3 | 4,7 |
| CO11(4) | 28,1 | -23,4 | -261,3 | 22,1 | -21,5 | 2,5 |
| CO11(6) | 25,8 | -61,6 | -584,7 | -5,1 | -25,3 | 5,3 |
| CO11(9) | 18,5 | -68,6 | -602,3 | -25,6 | -15,6 | 5,5 |

## Nachweis

### Übersicht

| Name | Wert | Nachweisstatus |
|---|---|---|
| Berechnung | 100,0% | OK |
| Platten | 0,1 < 5,0% | OK |
| Lokale Verformung | 0,0 < 3% | OK |
| Schrauben | 27,8 < 100% | OK |
| Schweißnähte | 98,0 < 100% | OK |
| Beulen | Nicht berechnet | |

### Platten

| Name | Material | $t_p$ [mm] | Lasten | $\sigma_{Ed}$ [MPa] | $\varepsilon_{Pl}$ [%] | $\sigma_{c,Ed}$ [MPa] | Status |
|---|---|---|---|---|---|---|---|
| 492-bfl 1 | Baustahl S 355 | 17,5 | CO11(22) | 41,9 | 0,0 | 0,0 | OK |
| 492-tfl 1 | Baustahl S 355 | 17,5 | CO11(22) | 343,8 | 0,0 | 19,6 | OK |
| 492-w 1 | Baustahl S 355 | 10,0 | CO11(22) | 355,2 | 0,1 | 0,0 | OK |
| 493 | Baustahl S 355 | 4,0 | CO11(22) | 300,2 | 0,0 | 0,0 | OK |
| Stirnblech1 | S 355 | 10,0 | CO11(22) | 195,0 | 0,0 | 42,7 | OK |

### Bemessungsdaten

| Material | $f_y$ [MPa] | $\varepsilon_{lim}$ [%] |
|---|---|---|
| Baustahl S 355 | 355,0 | 5,0 |
| S 355 | 355,0 | 5,0 |

### Erläuterung von Symbolen

| | |
|---|---|
| $t_p$ | Plattendicke |
| $\sigma_{Ed}$ | Vergleichsspannung |
| $\varepsilon_{Pl}$ | Plastische Dehnung |
| $\sigma_{c,Ed}$ | Kontaktspannung |
| $f_y$ | Streckgrenze |
| $\varepsilon_{lim}$ | Grenzwert plastische Dehnung |

## Lokale Verformung

| Name | $d_0$ [mm] | Lasten | $\delta$ [mm] | $\delta_{lim}$ [mm] | $\delta/d_0$ [%] | Nachweisstatus |
|---|---|---|---|---|---|---|
| 493 | 80 | CO11(9) | 0 | 2 | 0,0 | OK |

### Erläuterung von Symbolen

| | |
|---|---|
| $d_0$ | Querschnittsgröße |
| $\delta$ | Lokale Verformung im Querschnitt |
| $\delta_{lim}$ | Zulässige Verformung |

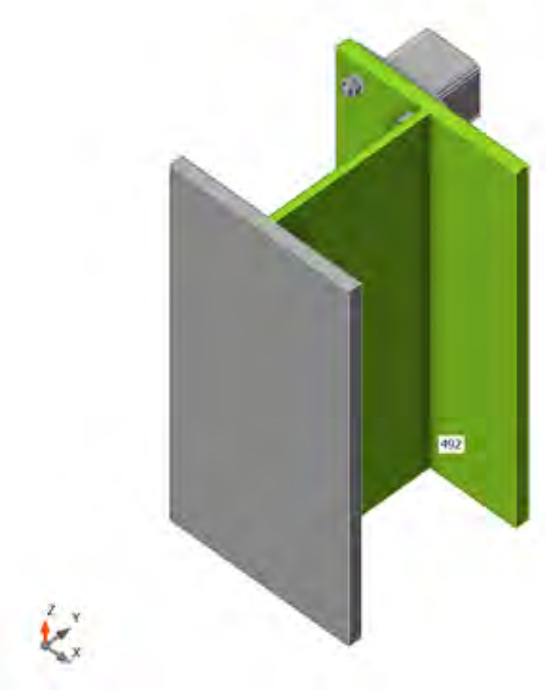


*Gesamt, CO11(22)*

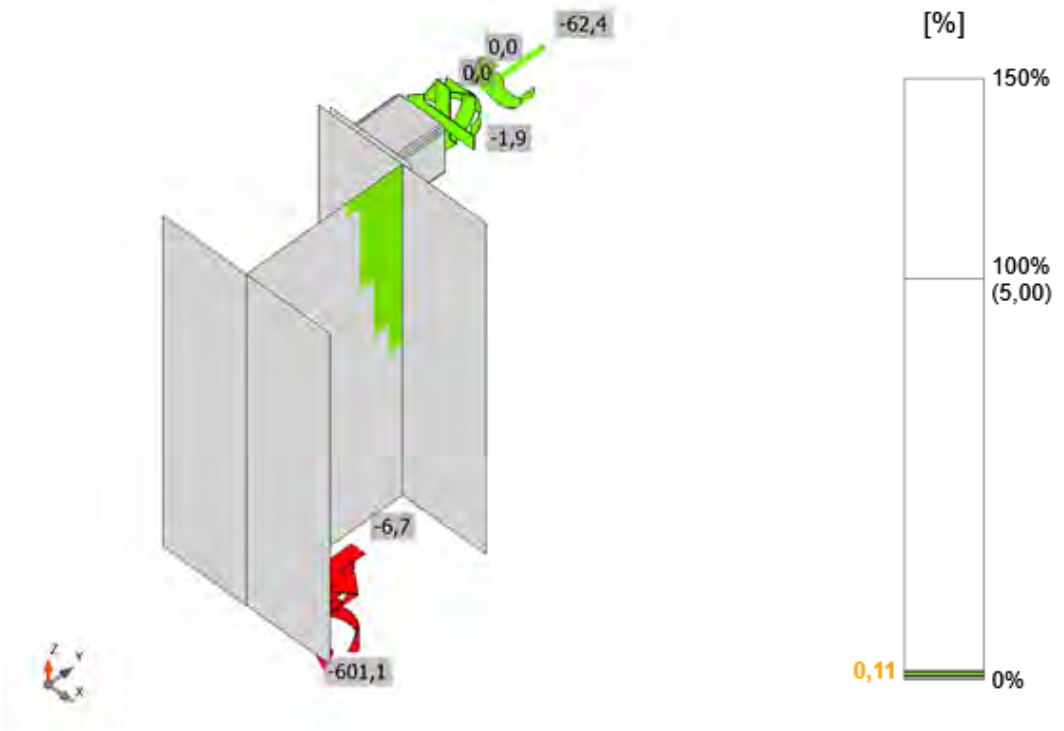


*Dehnung, CO11(22)*

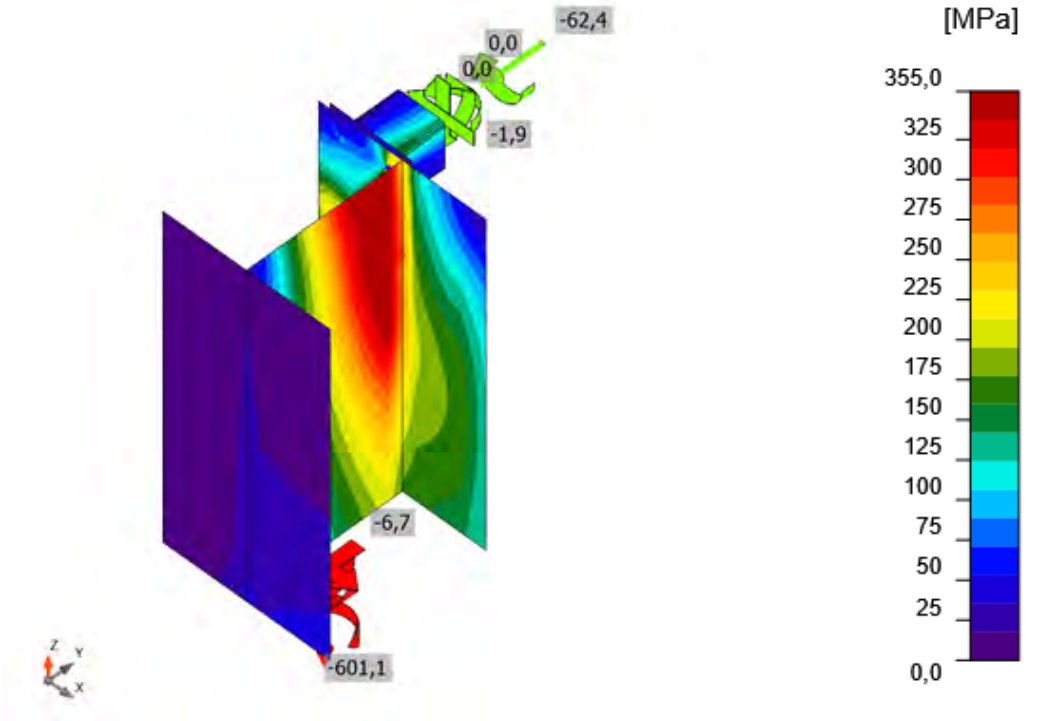


*Vergleichsspannung, CO11(22)*

## Schrauben

| Form | Position | Klasse | Lasten | $F_{t,Ed}$ [kN] | $F_{v,Ed}$ [kN] | $F_{b,Rd}$ [kN] | $Ut_t$ [%] | $Ut_s$ [%] | $Ut_{ts}$ [%] | Konstruktionsregeln | Status |
|---|---|---|---|---|---|---|---|---|---|---|---|
| 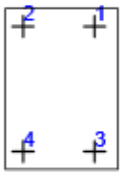 | B1 | M12 8.8 - 1 | CO11(23) | 9,9 | 1,3 | 67,8 | 20,3 | 4,0 | 18,5 | OK | OK |
| | B2 | M12 8.8 - 1 | CO11(23) | 3,3 | 1,0 | 60,5 | 6,7 | 3,2 | 8,0 | OK | OK |
| | B3 | M12 8.8 - 1 | CO11(23) | 13,5 | 1,4 | 60,5 | 27,8 | 4,2 | 24,1 | OK | OK |
| | B4 | M12 8.8 - 1 | CO11(9) | 6,4 | 1,9 | 60,3 | 13,2 | 5,8 | 15,2 | OK | OK |



### Bemessungsdaten

| Klasse | $F_{t,Rd}$ [kN] | $B_{p,Rd}$ [kN] | $F_{v,Rd}$ [kN] |
|---|---|---|---|
| M12 8.8 - 1 | 48,6 | 140,5 | 32,4 |

### Erläuterung von Symbolen

| | |
|---|---|
| $F_{t,Ed}$ | Zugkraft |
| $F_{v,Ed}$ | Resultierende der Schraubenscherkräfte Vy und Vz in Scherebenen |
| $F_{b,Rd}$ | Lochleibungstragfähigkeit der Platte nach EN 1993-1-8 Tab. 3.4 |
| $Ut_t$ | Ausnutzung unter Zug |
| $Ut_s$ | Ausnutzung unter Schub |
| $Ut_{ts}$ | Interaktion von Zug und Schub EN_1993-1-8 Tabelle 3.4 |
| $F_{t,Rd}$ | Zugtragfähigkeit der Schraube nach EN 1993-1-8 Tabelle 3.4 |
| $B_{p,Rd}$ | Durchstanztragfähigkeit nach EN 1993-1-8 Tabelle 3.4 |
| $F_{v,Rd}$ | Schertragfähigkeit der Schraube nach EN 1993-1-8 Tabelle 3.4 |

## Schweißnähte

| Position | Kante | $T_w$ [mm] | L [mm] | Lasten | $\sigma_{w,Ed}$ [MPa] | $\varepsilon_{Pl}$ [%] | $\sigma_{\perp}$ [MPa] | $\tau_{\perp}$ [MPa] | $\tau_{\parallel}$ [MPa] | Ut [%] | $Ut_c$ [%] | Konstruktionsregeln | Status |
|---|---|---|---|---|---|---|---|---|---|---|---|---|---|
| Stirnblech1 | 493 | ◢ 4,0 | 280 | CO11(22) | 426,9 | 0,0 | -205,8 | 68,9 | -204,7 | 98,0 | 63,8 | OK | OK |

### Bemessungsdaten

| Material | $f_u$ [MPa] | $\beta_w$ [-] | $\sigma_{w,Rd}$ [MPa] | 0.9 σ [MPa] |
|---|---|---|---|---|
| S 355 | 490,0 | 0,90 | 435,6 | 352,8 |

**Erläuterung von Symbolen**

| | |
|---|---|
| $T_w$ | Nahtdicke a |
| L | Länge |
| $\sigma_{w,Ed}$ | Vergleichsspannung |
| $\varepsilon_{Pl}$ | Dehnung |
| $\sigma_{\perp}$ | Senkrechte Spannung |
| $\tau_{\perp}$ | Scherspannung senkrecht zur Schweißnahtachse |
| $\tau_{\parallel}$ | Scherspannung parallel zur Schweißnahtachse |
| Ut | Ausnutzung |
| $Ut_c$ | Schätzung der Schweißnahtkapazität |
| ◢ | Kehlnaht |
| $f_u$ | Grenzfestigkeit der Schweißnaht |
| $\beta_w$ | Korrelationsfaktor nach EN 1993-1-8 Tab. 4.1 |
| $\sigma_{w,Rd}$ | Tragfähigkeit der Schweißnaht |
| 0.9 σ | Senkrechter Spannungswiderstand - 0.9*fu / γM2 |

### Beulen

**Die Beulanalyse wurde nicht berechnet.**

## Normeinstellungen

| Position | Wert | Einheit | Bezug |
|---|---|---|---|
| Sicherheitsfaktor $\gamma_{M0}$ | 1,00 | - | EN 1993-1-1 – 6.1 |
| Sicherheitsfaktor $\gamma_{M1}$ | 1,00 | - | EN 1993-1-1 – 6.1 |
| Sicherheitsfaktor $\gamma_{M2}$ | 1,25 | - | EN 1993-1-1 – 6.1 |
| Sicherheitsfaktor $\gamma_{M3}$ | 1,25 | - | EN 1993-1-8 – Table 2.1 |
| Sicherheitsfaktor $\gamma_C$ | 1,50 | - | EN 1992-1-1 – 2.4.2.4 |
| Sicherheitsfaktor $\gamma_{Inst}$ | 1,20 | - | EN 1992-4 – Table 4.1 |
| Verbindungskoeffizient βj | 0,67 | - | EN 1993-1-8 – 6.2.5(7) |
| Wirksame Fläche - Einfluss der Netzgröße | 0,10 | - | |
| Reibungsbeiwert - Beton | 0,25 | - | EN 1993-1-8 |
| Reibungskoeffizient bei gleitfesten Verbindungen | 0,30 | - | EN 1993-1-8 – Table 3.7 |
| Plastische Dehnung - Grenzwert | 0,05 | - | EN 1993-1-5 |
| Konstruktionsregeln | Ja | | |
| Distance between bolts [d0] | 2,20 | - | EN 1993-1-8 – Table 3.3 |
| Distance between bolts and edge [d0] | 1,20 | - | EN 1993-1-8 – Table 3.3 |
| Nachweis der Tragfähigkeit bei Betonausbruch | Beide | | |
| Berechnetes αb für Lochleibungsnachweis anwenden. | Ja | | EN 1993-1-8 – Table 3.4 |
| Gerissener Beton | Ja | | EN 1992-4 |
| Überprüfen der lokalen Verformung | Ja | | |
| Lokale Verformung - Grenzwert | 0,03 | - | CIDECT DG 1, 3 – 1.1 |
| Geometrische Nichtlinearität (GMNA) | Ja | | Analyse mit großen Verformungen für Verbindungen mit Hohlprofilen |
| Ausgesteiftes System | Nein | | EN 1993-1-8 – 5.2.2.5 |

## Projektdaten

| | |
|---|---|
| Projektname | IdeaStatiCa-Stadion_Fazanerija_JK-5_BR - 1411 |
| Projektnummer | Detajl D7-O1 |
| Autor | mag. Igor Gorup dipl. ing. |
| Beschreibung | |
| Datum | 14.06.2025 |
| Norm | EN |

## Material

| | |
|---|---|
| Stahl | Baustahl S 355, Baustahl S 235, S 355 |

# Projektposition 1411

## Bemessung

| | |
|---|---|
| Name | 1411 |
| Beschreibung | |
| Berechnung | Spannung, Dehnung/ Lasten im Gleichgewicht |

### Bauteile

#### Geometrie

| Name | Querschnitt | β – Rotation [°] | Y - Rotation [°] | α - Rotation [°] | Abstand ex [mm] | Abstand ey [mm] | Abstand ez [mm] |
|---|---|---|---|---|---|---|---|
| 493 | 364 - RHS80x80 | 90,0 | 0,0 | -180,0 | 0 | -90 | 0 |
| 166 | 265 - HEB260 | -180,0 | 90,0 | 90,0 | 100 | 0 | 0 |
| 204 | 364 - RHS80x80 | 0,0 | 0,0 | -180,0 | 0 | -90 | 0 |

#### Auflager und Kräfte

| Name | Auflager | Kräfte in | X [mm] |
|---|---|---|---|
| 493 / anfang | | Position | 0 |
| 166 / anfang | N-Vy-Vz-Mx-My-Mz | Position | 0 |
| 204 / ende | | Position | 0 |

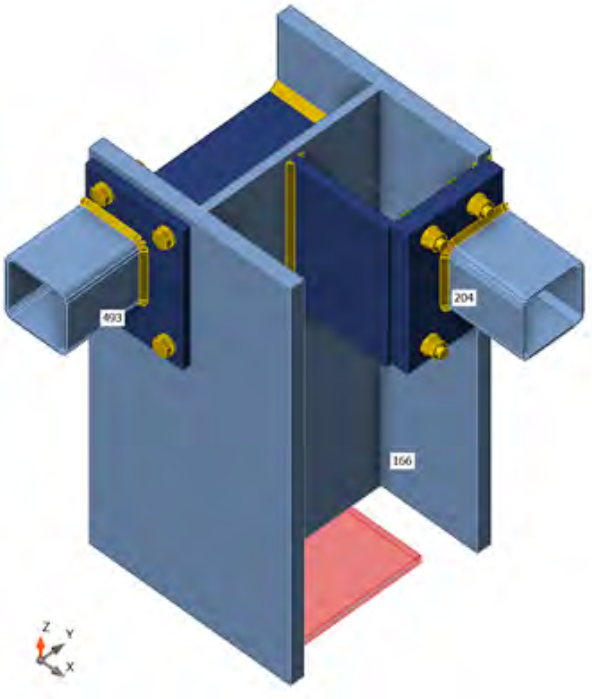


### Querschnitte

| Name | Material |
|---|---|
| 364 - RHS80x80 | Baustahl S 355 |
| 265 - HEB260 | Baustahl S 355 |

### Schrauben

| Name | Durchmesser [mm] | $f_y$ [MPa] | $f_u$ [MPa] | Bruttofläche [mm$^2$] |
|---|---|---|---|---|
| M12 8.8 | 12 | 640,0 | 800,0 | 113 |

## Lasteinwirkungen (Kräfte im Gleichgewicht)

| Name | Bauteil | N [kN] | Vy [kN] | Vz [kN] | Mx [kNm] | My [kNm] | Mz [kNm] |
|---|---|---|---|---|---|---|---|
| CO11(30) | 493 / Anfang | -5,9 | -1,6 | 1,0 | 0,0 | 0,0 | 0,0 |
| | 166 / Anfang | -19,4 | 10,5 | 10,3 | 0,0 | 51,9 | -12,5 |
| | 204 / Ende | -1,3 | 1,9 | 1,3 | -0,1 | 0,0 | 0,0 |
| CO9(31) | 493 / Anfang | 11,8 | 0,0 | 0,0 | 0,0 | 0,0 | 0,0 |
| | 166 / Anfang | 73,9 | -3,5 | -17,6 | 0,0 | -99,0 | 9,0 |
| | 204 / Ende | 3,6 | 0,0 | 0,0 | -0,1 | 0,0 | 0,0 |
| CO11(32) | 493 / Anfang | -12,3 | -2,6 | 1,3 | -0,1 | 0,0 | 0,0 |
| | 166 / Anfang | -91,3 | 11,3 | 15,5 | 0,0 | 77,6 | -13,8 |
| | 204 / Ende | -1,3 | 3,1 | 1,8 | -0,1 | 0,0 | 0,0 |
| CO11(33) | 493 / Anfang | 49,2 | -3,1 | 1,6 | 0,0 | 0,0 | 0,0 |
| | 166 / Anfang | 774,0 | 14,1 | -6,8 | -0,1 | -40,7 | -18,2 |
| | 204 / Ende | 1,2 | -1,2 | 1,8 | 0,0 | 0,0 | 0,0 |
| CO11(34) | 493 / Anfang | 16,0 | -1,7 | 1,5 | 0,0 | 0,0 | 0,0 |
| | 166 / Anfang | 329,4 | 13,4 | 9,3 | 0,0 | 56,5 | -16,0 |
| | 204 / Ende | -1,1 | 1,9 | 1,8 | 0,0 | 0,0 | 0,0 |
| CO11(35) | 493 / Anfang | -13,5 | -2,6 | 1,0 | 0,0 | 0,0 | 0,0 |
| | 166 / Anfang | -147,9 | 3,5 | 11,5 | 0,1 | 56,4 | -3,7 |
| | 204 / Ende | 0,2 | 3,1 | 1,3 | -0,1 | 0,0 | 0,0 |
| CO11(36) | 493 / Anfang | 56,1 | -1,9 | 1,2 | 0,0 | 0,0 | 0,0 |
| | 166 / Anfang | 893,0 | 9,9 | -4,5 | -0,1 | -17,6 | -13,5 |
| | 204 / Ende | 1,0 | -0,7 | 1,3 | 0,0 | 0,0 | 0,0 |
| CO11(37) | 493 / Anfang | 34,0 | -3,0 | 1,5 | -0,1 | 0,0 | 0,0 |
| | 166 / Anfang | 502,9 | 10,4 | -9,6 | -0,1 | -60,4 | -11,8 |
| | 204 / Ende | 1,9 | -1,2 | 1,8 | 0,0 | 0,0 | 0,0 |
| CO11(38) | 493 / Anfang | 60,0 | -1,9 | 1,7 | 0,0 | 0,0 | 0,0 |
| | 166 / Anfang | 961,0 | 12,2 | -4,4 | -0,1 | -17,1 | -16,3 |
| | 204 / Ende | 1,1 | -0,7 | 1,8 | 0,0 | 0,0 | 0,0 |
| CO11(39) | 493 / Anfang | -10,0 | -2,6 | 1,4 | -0,1 | 0,0 | 0,0 |
| | 166 / Anfang | -80,2 | 8,1 | 12,2 | 0,1 | 60,5 | -8,4 |
| | 204 / Ende | -0,2 | 3,1 | 1,8 | -0,1 | 0,0 | 0,0 |
| CO11(40) | 493 / Anfang | -16,1 | -2,6 | 1,0 | 0,0 | 0,0 | 0,0 |
| | 166 / Anfang | -157,8 | 9,0 | 15,3 | 0,0 | 75,3 | -11,1 |
| | 204 / Ende | -1,3 | 3,1 | 1,3 | -0,1 | 0,0 | 0,0 |
| CO11(41) | 493 / Anfang | 5,8 | -2,7 | 1,4 | 0,0 | 0,0 | 0,0 |
| | 166 / Anfang | 190,2 | 11,8 | 14,2 | 0,0 | 80,7 | -14,6 |
| | 204 / Ende | -1,1 | 3,1 | 1,8 | -0,1 | 0,0 | 0,0 |
| CO11(42) | 493 / Anfang | -9,7 | -2,6 | 1,4 | -0,1 | 0,0 | 0,0 |
| | 166 / Anfang | -81,2 | 5,9 | 11,7 | 0,1 | 58,5 | -6,4 |
| | 204 / Ende | 0,2 | 3,1 | 1,8 | -0,1 | 0,0 | 0,0 |
| CO11(19) | 493 / Anfang | 62,3 | -1,9 | 1,7 | 0,0 | 0,0 | 0,0 |
| | 166 / Anfang | 976,4 | 11,3 | -6,9 | -0,1 | -36,5 | -12,9 |
| | 204 / Ende | 1,5 | -0,7 | 1,8 | 0,0 | 0,0 | 0,0 |
| CO11(20) | 493 / Anfang | -15,9 | -2,6 | 1,0 | 0,0 | 0,0 | 0,0 |
| | 166 / Anfang | -158,8 | 6,8 | 14,8 | -0,1 | 73,2 | -9,0 |
| | 204 / Ende | -0,9 | 3,1 | 1,3 | -0,1 | 0,0 | 0,0 |
| CO11(22) | 493 / Anfang | 42,1 | -1,8 | 1,6 | 0,0 | 0,0 | 0,0 |
| | 166 / Anfang | 680,2 | 14,8 | -3,3 | -0,1 | -17,0 | -18,2 |

| Name | Bauteil | N [kN] | Vy [kN] | Vz [kN] | Mx [kNm] | My [kNm] | Mz [kNm] |
|---|---|---|---|---|---|---|---|
| | 204 / Ende | 0,2 | -0,7 | 1,8 | 0,0 | 0,0 | 0,0 |
| CO11(23) | 493 / Anfang | 2,2 | -2,7 | 1,4 | 0,0 | 0,0 | 0,0 |
| | 166 / Anfang | 133,1 | 11,7 | 14,6 | 0,0 | 80,4 | -14,5 |
| | 204 / Ende | -1,1 | 3,1 | 1,8 | -0,1 | 0,0 | 0,0 |
| CO11(27) | 493 / Anfang | 4,7 | -2,7 | 1,4 | -0,1 | 0,0 | 0,0 |
| | 166 / Anfang | 144,6 | 8,5 | 11,4 | 0,1 | 62,7 | -9,2 |
| | 204 / Ende | -0,1 | 3,1 | 1,8 | -0,1 | 0,0 | 0,0 |
| CO11(28) | 493 / Anfang | 51,6 | -3,1 | 1,6 | 0,0 | 0,0 | 0,0 |
| | 166 / Anfang | 787,0 | 11,0 | -9,7 | -0,2 | -60,2 | -12,8 |
| | 204 / Ende | 2,1 | -1,2 | 1,8 | 0,0 | 0,0 | 0,0 |
| CO11(29) | 493 / Anfang | 59,8 | -1,9 | 1,7 | 0,0 | 0,0 | 0,0 |
| | 166 / Anfang | 962,9 | 14,5 | -4,0 | -0,1 | -16,4 | -18,3 |
| | 204 / Ende | 0,6 | -0,7 | 1,8 | 0,0 | 0,0 | 0,0 |
| CO11(10) | 493 / Anfang | 62,4 | -1,9 | 1,7 | 0,0 | 0,0 | 0,0 |
| | 166 / Anfang | 974,5 | 9,0 | -7,3 | -0,1 | -37,2 | -10,8 |
| | 204 / Ende | 2,0 | -0,7 | 1,8 | 0,0 | 0,0 | 0,0 |
| CO11(12) | 493 / Anfang | 51,9 | 0,0 | 1,6 | 0,0 | 0,0 | 0,0 |
| | 166 / Anfang | 832,4 | 8,6 | -2,4 | 0,0 | -2,1 | -9,4 |
| | 204 / Ende | 0,9 | 0,0 | 1,8 | 0,0 | 0,0 | 0,0 |
| CO11(13) | 493 / Anfang | 51,7 | -3,1 | 1,6 | 0,0 | 0,0 | 0,0 |
| | 166 / Anfang | 784,9 | 8,7 | -10,1 | -0,2 | -60,6 | -10,7 |
| | 204 / Ende | 2,5 | -1,2 | 1,8 | 0,0 | 0,0 | 0,0 |
| CO11(15) | 493 / Anfang | 0,3 | -1,6 | 1,4 | -0,1 | 0,0 | 0,0 |
| | 166 / Anfang | 58,8 | 9,6 | 7,2 | 0,1 | 36,4 | -9,8 |
| | 204 / Ende | -0,2 | 1,9 | 1,8 | -0,1 | 0,0 | 0,0 |
| CO11(17) | 493 / Anfang | 26,7 | -1,7 | 1,5 | -0,1 | 0,0 | 0,0 |
| | 166 / Anfang | 409,2 | 11,0 | -5,9 | -0,1 | -36,8 | -11,8 |
| | 204 / Ende | 1,1 | -0,7 | 1,8 | 0,0 | 0,0 | 0,0 |
| CO11(18) | 493 / Anfang | 51,7 | 0,0 | 1,6 | 0,0 | 0,0 | 0,0 |
| | 166 / Anfang | 834,1 | 10,9 | -2,0 | 0,0 | -1,0 | -11,5 |
| | 204 / Ende | 0,4 | 0,0 | 1,8 | 0,0 | 0,0 | 0,0 |
| CO11(3) | 493 / Anfang | 49,3 | 0,0 | 1,6 | 0,0 | 0,0 | 0,0 |
| | 166 / Anfang | 820,9 | 14,0 | 1,0 | -0,1 | 18,7 | -17,0 |
| | 204 / Ende | -0,5 | 0,0 | 1,8 | 0,0 | 0,0 | 0,0 |
| CO11(6) | 493 / Anfang | 8,2 | -2,7 | 1,4 | -0,1 | 0,0 | 0,0 |
| | 166 / Anfang | 201,8 | 8,6 | 11,0 | 0,1 | 62,9 | -9,3 |
| | 204 / Ende | -0,1 | 3,1 | 1,8 | -0,1 | 0,0 | 0,0 |
| CO11(9) | 493 / Anfang | 31,3 | 0,0 | 1,5 | 0,0 | 0,0 | 0,0 |
| | 166 / Anfang | 538,5 | 14,3 | 2,1 | 0,0 | 17,8 | -16,9 |
| | 204 / Ende | -0,8 | 0,0 | 1,8 | 0,0 | 0,0 | 0,0 |

### Fehlende Lasten

| Name | X [kN] | Y [kN] | Z [kN] | Mx [kNm] | My [kNm] | Mz [kNm] |
|---|---|---|---|---|---|---|
| CO11(30) | 7,6 | 2,5 | -21,7 | 50,7 | -11,6 | 0,6 |
| CO9(31) | 0,1 | -5,8 | 73,9 | -97,3 | 8,6 | -1,4 |
| CO11(32) | 7,4 | 0,0 | -94,5 | 75,8 | -12,8 | 1,2 |
| CO11(33) | 12,2 | 43,6 | 770,6 | -40,1 | -16,9 | -4,6 |
| CO11(34) | 10,6 | 23,4 | 326,2 | 55,3 | -14,9 | -1,3 |
| CO11(35) | 1,2 | -5,1 | -150,3 | 55,1 | -3,5 | 1,3 |
| CO11(36) | 9,1 | 52,3 | 890,4 | -17,2 | -12,6 | -5,2 |
| CO11(37) | 9,3 | 25,6 | 499,6 | -59,6 | -10,9 | -3,4 |
| CO11(38) | 11,4 | 56,3 | 957,5 | -16,8 | -15,2 | -5,6 |
| CO11(39) | 5,3 | -0,8 | -83,4 | 59,0 | -7,8 | 1,0 |
| CO11(40) | 5,1 | -4,0 | -160,1 | 73,5 | -10,3 | 1,5 |
| CO11(41) | 8,0 | 16,9 | 187,0 | 79,0 | -13,6 | -0,4 |
| CO11(42) | 3,5 | -1,1 | -84,4 | 57,1 | -6,0 | 0,9 |
| CO11(19) | 10,9 | 56,1 | 973,0 | -36,0 | -11,9 | -5,9 |
| CO11(20) | 3,3 | -4,2 | -161,1 | 71,5 | -8,4 | 1,5 |
| CO11(22) | 13,2 | 39,5 | 676,8 | -16,8 | -16,9 | -3,9 |
| CO11(23) | 7,9 | 13,7 | 129,9 | 78,7 | -13,5 | -0,1 |
| CO11(27) | 5,8 | 13,0 | 141,4 | 61,3 | -8,5 | -0,3 |
| CO11(28) | 10,0 | 43,1 | 783,6 | -59,3 | -11,9 | -5,0 |
| CO11(29) | 13,2 | 56,5 | 959,4 | -16,1 | -17,1 | -5,5 |
| CO11(10) | 9,1 | 55,9 | 971,0 | -36,6 | -10,1 | -5,9 |
| CO11(12) | 9,5 | 49,5 | 829,0 | -2,0 | -8,8 | -4,8 |
| CO11(13) | 8,1 | 42,8 | 781,5 | -59,8 | -10,0 | -5,0 |
| CO11(15) | 7,8 | 5,7 | 55,7 | 35,4 | -9,1 | 0,1 |
| CO11(17) | 10,3 | 21,6 | 405,9 | -36,4 | -10,9 | -2,6 |
| CO11(18) | 11,3 | 49,7 | 830,7 | -1,0 | -10,6 | -4,7 |
| CO11(3) | 13,5 | 50,2 | 817,5 | 18,5 | -15,7 | -4,4 |
| CO11(6) | 5,8 | 16,1 | 198,6 | 61,5 | -8,6 | -0,6 |
| CO11(9) | 13,5 | 33,4 | 535,2 | 17,5 | -15,6 | -2,8 |

## Nachweis

### Übersicht

| Name | Wert | Nachweisstatus |
|---|---|---|
| Berechnung | 100,0% | OK |
| Platten | 0,0 < 5,0% | OK |
| Lokale Verformung | 0,0 < 3% | OK |
| Schrauben | 30,5 < 100% | OK |
| Schweißnähte | 85,4 < 100% | OK |
| Beulen | Nicht berechnet | |

## Platten

| Name | Material | $t_p$ [mm] | Lasten | $\sigma_{Ed}$ [MPa] | $\varepsilon_{Pl}$ [%] | $\sigma_{c,Ed}$ [MPa] | Status |
|---|---|---|---|---|---|---|---|
| 493 | Baustahl S 355 | 4,0 | CO11(19) | 182,1 | 0,0 | 0,0 | OK |
| 166-bfl 1 | Baustahl S 355 | 17,5 | CO11(10) | 100,2 | 0,0 | 13,6 | OK |
| 166-tfl 1 | Baustahl S 355 | 17,5 | CO11(10) | 96,1 | 0,0 | 0,0 | OK |
| 166-w 1 | Baustahl S 355 | 10,0 | CO11(10) | 86,6 | 0,0 | 0,0 | OK |
| 204 | Baustahl S 355 | 4,0 | CO11(41) | 172,8 | 0,0 | 0,0 | OK |
| Stirnblech1 | S 355 | 10,0 | CO11(40) | 166,6 | 0,0 | 31,3 | OK |
| Verschobene Stirnplatte1a | S 355 | 10,0 | CO11(35) | 126,9 | 0,0 | 30,3 | OK |
| Verschobene Stirnplatte1b | S 355 | 10,0 | CO11(13) | 87,2 | 0,0 | 10,6 | OK |
| Steifenblech1 | S 355 | 10,0 | CO11(10) | 56,1 | 0,0 | 0,0 | OK |
| Rippe1 | S 355 | 15,0 | CO11(10) | 177,7 | 0,0 | 0,0 | OK |

**Bemessungsdaten**

| Material | $f_y$ [MPa] | $\varepsilon_{lim}$ [%] |
|---|---|---|
| Baustahl S 355 | 355,0 | 5,0 |
| S 355 | 355,0 | 5,0 |

**Erläuterung von Symbolen**

| | |
|---|---|
| $t_p$ | Plattendicke |
| $\sigma_{Ed}$ | Vergleichsspannung |
| $\varepsilon_{Pl}$ | Plastische Dehnung |
| $\sigma_{c,Ed}$ | Kontaktspannung |
| $f_y$ | Streckgrenze |
| $\varepsilon_{lim}$ | Grenzwert plastische Dehnung |

## Lokale Verformung

| Name | $d_0$ [mm] | Lasten | $\delta$ [mm] | $\delta_{lim}$ [mm] | $\delta/d_0$ [%] | Nachweisstatus |
|---|---|---|---|---|---|---|
| 493 | 80 | CO11(9) | 0 | 2 | 0,0 | OK |
| 204 | 80 | CO11(9) | 0 | 2 | 0,0 | OK |

**Erläuterung von Symbolen**

| | |
|---|---|
| $d_0$ | Querschnittsgröße |
| $\delta$ | Lokale Verformung im Querschnitt |
| $\delta_{lim}$ | Zulässige Verformung |

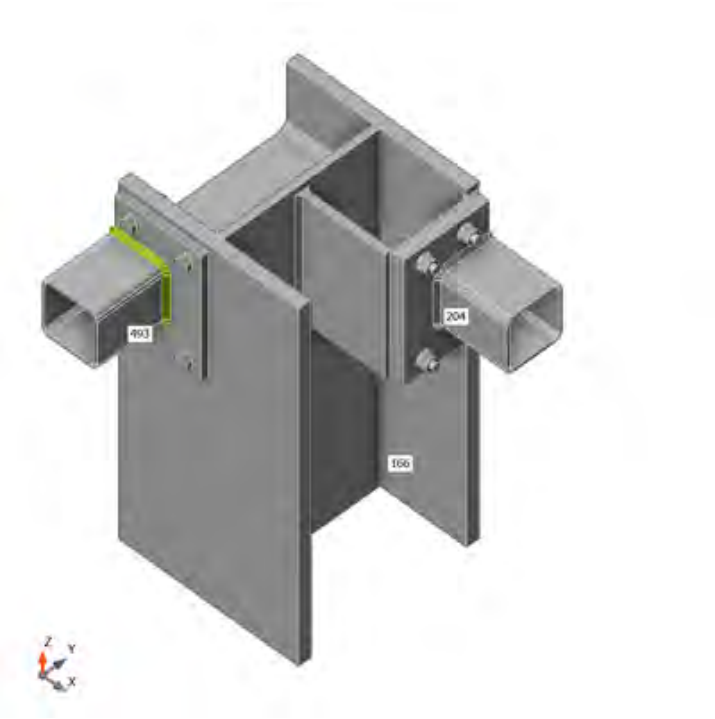


*Gesamt, CO11(19)*

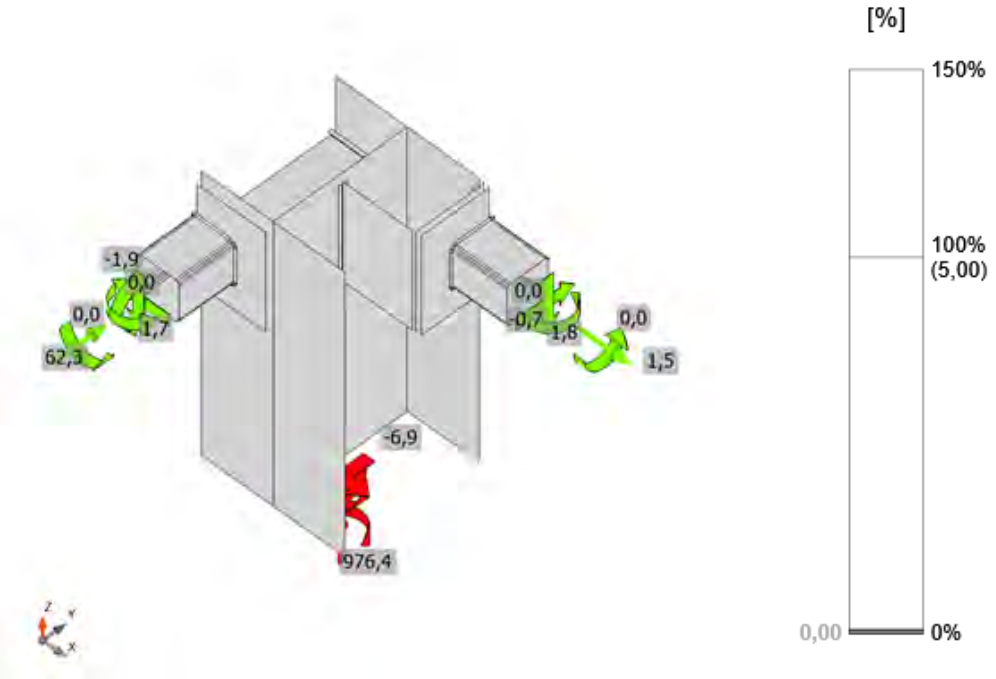


*Dehnung, CO11(19)*

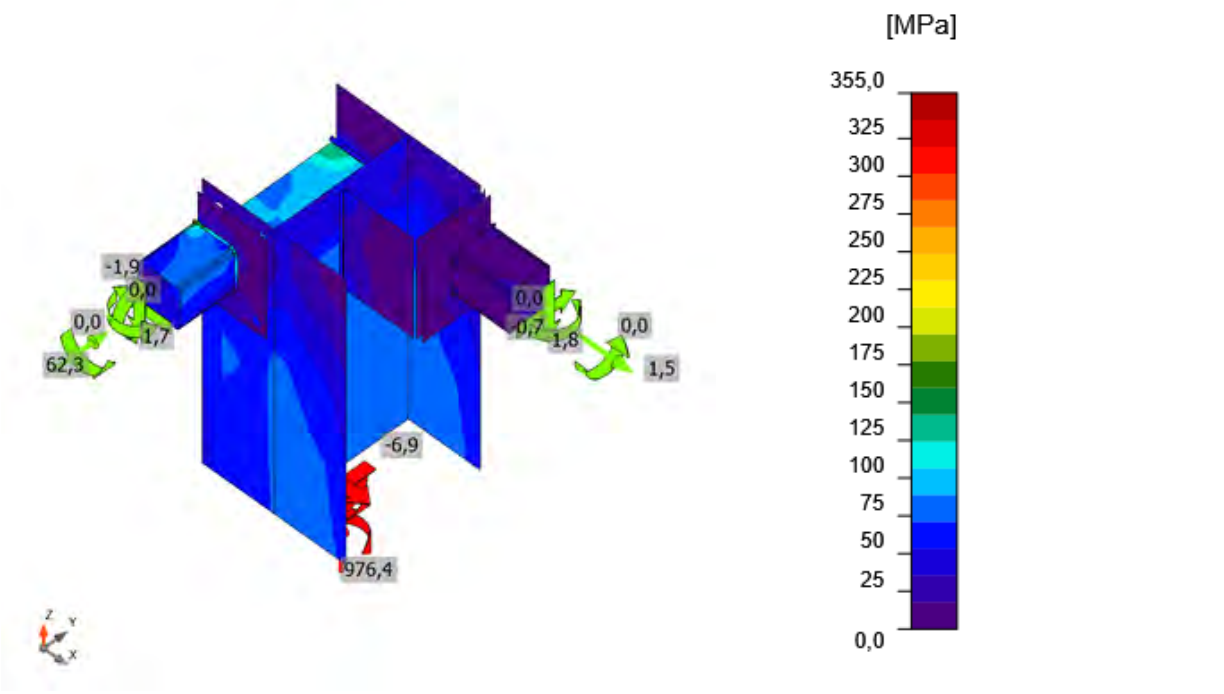


*Vergleichsspannung, CO11(19)*

## Schrauben

| Form | Position | Klasse | Lasten | $F_{t,Ed}$ [kN] | $F_{v,Ed}$ [kN] | $F_{b,Rd}$ [kN] | $Ut_t$ [%] | $Ut_s$ [%] | $Ut_{ts}$ [%] | Konstruktionsregeln | Status |
|---|---|---|---|---|---|---|---|---|---|---|---|
| 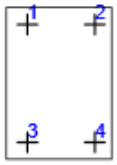 | B1 | M12 8.8 - 1 | CO11(40) | 13,3 | 1,3 | 63,6 | 27,4 | 3,9 | 23,5 | OK | OK |
| | B2 | M12 8.8 - 1 | CO11(40) | 1,6 | 0,9 | 60,3 | 3,4 | 2,6 | 5,1 | OK | OK |
| | B3 | M12 8.8 - 1 | CO11(40) | 14,8 | 0,6 | 71,3 | 30,5 | 1,7 | 23,5 | OK | OK |
| | B4 | M12 8.8 - 1 | CO11(40) | 2,1 | 0,3 | 60,3 | 4,4 | 1,0 | 4,1 | OK | OK |
| 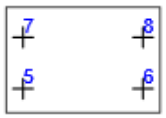 | B5 | M12 8.8 - 1 | CO11(42) | 2,7 | 1,3 | 84,4 | 5,6 | 4,1 | 8,1 | OK | OK |
| | B6 | M12 8.8 - 1 | CO11(6) | 2,1 | 0,6 | 62,4 | 4,4 | 1,7 | 4,8 | OK | OK |
| | B7 | M12 8.8 - 1 | CO11(13) | 6,9 | 0,3 | 60,3 | 14,2 | 0,9 | 11,1 | OK | OK |
| | B8 | M12 8.8 - 1 | CO11(6) | 3,3 | 0,8 | 60,3 | 6,8 | 2,4 | 7,3 | OK | OK |

**Bemessungsdaten**

| Klasse | $F_{t,Rd}$ [kN] | $B_{p,Rd}$ [kN] | $F_{v,Rd}$ [kN] |
|---|---|---|---|
| M12 8.8 - 1 | 48,6 | 140,5 | 32,4 |

**Erläuterung von Symbolen**

| | |
|---|---|
| $F_{t,Ed}$ | Zugkraft |
| $F_{v,Ed}$ | Resultierende der Schraubenscherkräfte Vy und Vz in Scherebenen |
| $F_{b,Rd}$ | Lochleibungstragfähigkeit der Platte nach EN 1993-1-8 Tab. 3.4 |
| $Ut_t$ | Ausnutzung unter Zug |
| $Ut_s$ | Ausnutzung unter Schub |
| $Ut_{ts}$ | Interaktion von Zug und Schub EN_1993-1-8 Tabelle 3.4 |
| $F_{t,Rd}$ | Zugtragfähigkeit der Schraube nach EN 1993-1-8 Tabelle 3.4 |
| $B_{p,Rd}$ | Durchstanztragfähigkeit nach EN 1993-1-8 Tabelle 3.4 |
| $F_{v,Rd}$ | Schertragfähigkeit der Schraube nach EN 1993-1-8 Tabelle 3.4 |

## Schweißnähte

| Position | Kante | $T_w$ [mm] | L [mm] | Lasten | $\sigma_{w,Ed}$ [MPa] | $\varepsilon_{Pl}$ [%] | $\sigma_{\perp}$ [MPa] | $\tau_{\perp}$ [MPa] | $\tau_{\parallel}$ [MPa] | Ut [%] | $Ut_c$ [%] | Konstruktionsregeln | Status |
|---|---|---|---|---|---|---|---|---|---|---|---|---|---|
| Verschobene Stirnplatte1a | 166-tfl 1 | ◢ 4,0 ◣ | 179 | CO11(42) | 84,2 | 0,0 | -65,4 | -30,6 | -2,1 | 19,3 | 15,3 | OK | OK |
| | | ◢ 4,0 ◣ | 179 | CO11(35) | 85,6 | 0,0 | 40,3 | 42,7 | 9,0 | 19,7 | 15,2 | OK | OK |
| 166-w 1 | Steifenblech1 | ◢ 4,0 ◣ | 179 | CO11(10) | 54,4 | 0,0 | 1,7 | 3,5 | 31,2 | 12,5 | 10,1 | OK | OK |
| | | ◢ 4,0 ◣ | 178 | CO11(10) | 55,2 | 0,0 | 0,3 | 1,6 | 31,8 | 12,7 | 10,4 | OK | OK |
| 166-bfl 1 | Rippe1 | ◢ 6,0 ◣ | 101 | CO11(10) | 42,1 | 0,0 | 11,1 | 12,5 | 19,8 | 9,7 | 8,3 | OK | OK |
| | | ◢ 6,0 ◣ | 101 | CO11(10) | 158,0 | 0,0 | -88,9 | 72,9 | -19,1 | 36,3 | 25,9 | OK | OK |
| 166-w 1 | Rippe1 | ◢ 6,0 ◣ | 176 | CO11(10) | 87,7 | 0,0 | -2,1 | -0,7 | -50,6 | 20,1 | 16,3 | OK | OK |
| | | ◢ 6,0 ◣ | 176 | CO11(10) | 35,9 | 0,0 | 2,8 | -1,4 | -20,6 | 8,2 | 7,2 | OK | OK |
| 166-tfl 1 | Rippe1 | ◢ 6,0 ◣ | 101 | CO11(10) | 84,9 | 0,0 | -53,7 | -38,0 | -0,5 | 19,5 | 16,2 | OK | OK |
| | | ◢ 6,0 ◣ | 101 | CO11(10) | 66,6 | 0,0 | 43,4 | -27,7 | -9,3 | 15,3 | 12,1 | OK | OK |
| Stirnblech1 | 493 | ◢ 4,0 | 215 | CO11(40) | 371,9 | 0,0 | 127,3 | 137,3 | 147,7 | 85,4 | 50,1 | OK | OK |
| Verschobene Stirnplatte1b | 204 | ◢ 4,0 | 215 | CO11(41) | 332,9 | 0,0 | -151,0 | 168,4 | -31,2 | 76,4 | 44,4 | OK | OK |

**Bemessungsdaten**

| Material | $f_u$ [MPa] | $\beta_w$ [-] | $\sigma_{w,Rd}$ [MPa] | 0.9 σ [MPa] |
|---|---|---|---|---|
| S 355 | 490,0 | 0,90 | 435,6 | 352,8 |

**Erläuterung von Symbolen**

| | |
|---|---|
| $T_w$ | Nahtdicke a |
| L | Länge |
| $\sigma_{w,Ed}$ | Vergleichsspannung |
| $\varepsilon_{Pl}$ | Dehnung |
| $\sigma_{\perp}$ | Senkrechte Spannung |
| $\tau_{\perp}$ | Scherspannung senkrecht zur Schweißnahtachse |
| $\tau_{\parallel}$ | Scherspannung parallel zur Schweißnahtachse |
| Ut | Ausnutzung |
| $Ut_c$ | Schätzung der Schweißnahtkapazität |
| ◢ | Kehlnaht |
| $f_u$ | Grenzfestigkeit der Schweißnaht |
| $\beta_w$ | Korrelationsfaktor nach EN 1993-1-8 Tab. 4.1 |
| $\sigma_{w,Rd}$ | Tragfähigkeit der Schweißnaht |
| 0.9 σ | Senkrechter Spannungswiderstand - 0.9*fu / γM2 |

### Beulen

**Die Beulanalyse wurde nicht berechnet.**

## Normeinstellungen

| Position | Wert | Einheit | Bezug |
|---|---|---|---|
| Sicherheitsfaktor $\gamma_{M0}$ | 1,00 | - | EN 1993-1-1 – 6.1 |
| Sicherheitsfaktor $\gamma_{M1}$ | 1,00 | - | EN 1993-1-1 – 6.1 |
| Sicherheitsfaktor $\gamma_{M2}$ | 1,25 | - | EN 1993-1-1 – 6.1 |
| Sicherheitsfaktor $\gamma_{M3}$ | 1,25 | - | EN 1993-1-8 – Table 2.1 |
| Sicherheitsfaktor $\gamma_C$ | 1,50 | - | EN 1992-1-1 – 2.4.2.4 |
| Sicherheitsfaktor $\gamma_{Inst}$ | 1,20 | - | EN 1992-4 – Table 4.1 |
| Verbindungskoeffizient βj | 0,67 | - | EN 1993-1-8 – 6.2.5(7) |
| Wirksame Fläche - Einfluss der Netzgröße | 0,10 | - | |
| Reibungsbeiwert - Beton | 0,25 | - | EN 1993-1-8 |
| Reibungskoeffizient bei gleitfesten Verbindungen | 0,30 | - | EN 1993-1-8 – Table 3.7 |
| Plastische Dehnung - Grenzwert | 0,05 | - | EN 1993-1-5 |
| Konstruktionsregeln | Ja | | |
| Distance between bolts [d0] | 2,20 | - | EN 1993-1-8 – Table 3.3 |
| Distance between bolts and edge [d0] | 1,20 | - | EN 1993-1-8 – Table 3.3 |
| Nachweis der Tragfähigkeit bei Betonausbruch | Beide | | |
| Berechnetes αb für Lochleibungsnachweis anwenden. | Ja | | EN 1993-1-8 – Table 3.4 |
| Gerissener Beton | Ja | | EN 1992-4 |
| Überprüfen der lokalen Verformung | Ja | | |
| Lokale Verformung - Grenzwert | 0,03 | - | CIDECT DG 1, 3 – 1.1 |
| Geometrische Nichtlinearität (GMNA) | Ja | | Analyse mit großen Verformungen für Verbindungen mit Hohlprofilen |
| Ausgesteiftes System | Nein | | EN 1993-1-8 – 5.2.2.5 |

| | |
|---|---|
| **Projekt:** | **IdeaStatiCa-Stadion_Fazanerija_JK-5_BR - 1086** |
| **Projektnummer:** | **Detajl D8-O1** |
| **Autor:** | **mag. Igor Gorup dipl. ing.** |

## Projektdaten

| | |
|---|---|
| Projektname | IdeaStatiCa-Stadion_Fazanerija_JK-5_BR - 1086 |
| Projektnummer | Detajl D8-O1 |
| Autor | mag. Igor Gorup dipl. ing. |
| Beschreibung | |
| Datum | 14.06.2025 |
| Norm | EN |

## Material

| | |
|---|---|
| Stahl | Baustahl S 355, Baustahl S 235, S 355 |

# Projektposition 1086

## Bemessung

| | |
|---|---|
| Name | 1086 |
| Beschreibung | |
| Berechnung | Spannung, Dehnung/ Lasten im Gleichgewicht |

### Bauteile

#### Geometrie

| Name | Querschnitt | β – Rotation [°] | Y - Rotation [°] | α - Rotation [°] | Abstand ex [mm] | Abstand ey [mm] | Abstand ez [mm] |
|---|---|---|---|---|---|---|---|
| 51 | 443 - IPE200 | -180,0 | 0,0 | -180,0 | 0 | 0 | 0 |
| 177 | 443 - IPE200 | -90,0 | 0,7 | 180,0 | 50 | 0 | 0 |

#### Auflager und Kräfte

| Name | Auflager | Kräfte in | X [mm] |
|---|---|---|---|
| 51 / anfang | | Position | 0 |
| 177 / anfang | N-Vy-Vz-Mx-My-Mz | Position | 0 |

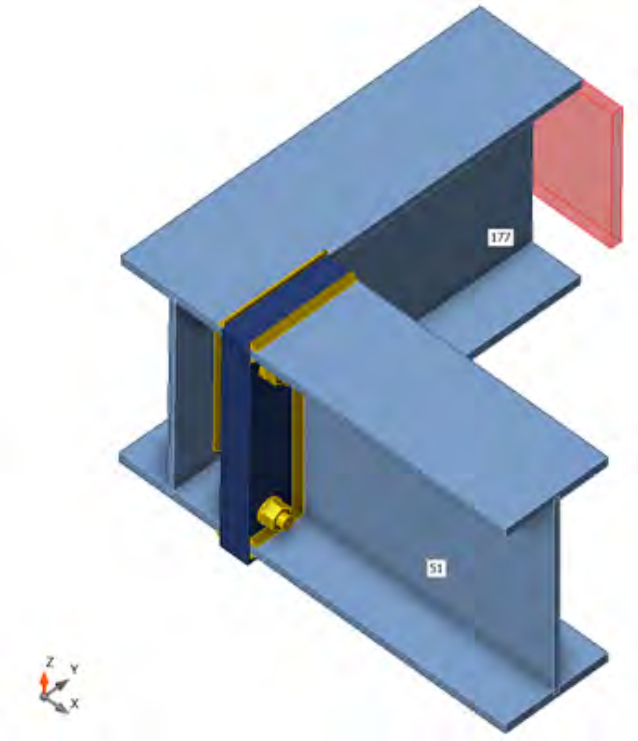


### Querschnitte

| Name | Material |
|---|---|
| 443 - IPE200 | S 355 |

### Schrauben

| Name | Durchmesser [mm] | $f_y$ [MPa] | $f_u$ [MPa] | Bruttofläche [$mm^2$] |
|---|---|---|---|---|
| M12 8.8 | 12 | 640,0 | 800,0 | 113 |

## Lasteinwirkungen (Kräfte im Gleichgewicht)

| Name | Bauteil | N [kN] | Vy [kN] | Vz [kN] | Mx [kNm] | My [kNm] | Mz [kNm] |
|---|---|---|---|---|---|---|---|
| CO11(17) | 51 / Anfang | 2,9 | 3,1 | 8,5 | 0,0 | 0,0 | -1,8 |
| | 177 / Anfang | 3,2 | -2,9 | -8,5 | 0,0 | 0,0 | 1,8 |
| CO11(18) | 51 / Anfang | 0,1 | -1,1 | 0,5 | 0,0 | 0,0 | 0,4 |
| | 177 / Anfang | -1,1 | -0,1 | -0,5 | 0,0 | 0,0 | -0,4 |
| CO11(19) | 51 / Anfang | 3,8 | 1,9 | 7,1 | 0,0 | 0,0 | -1,3 |
| | 177 / Anfang | 2,0 | -3,8 | -7,1 | 0,0 | 0,0 | 1,3 |
| CO9(20) | 51 / Anfang | -0,9 | -0,3 | 0,0 | 0,0 | 0,0 | 1,0 |
| | 177 / Anfang | 0,5 | 1,7 | 0,0 | 0,0 | 0,0 | -1,0 |
| CO11(21) | 51 / Anfang | 3,6 | 0,2 | 11,6 | 0,0 | 0,0 | -0,5 |
| | 177 / Anfang | 0,3 | -3,6 | -11,6 | 0,0 | 0,0 | 0,5 |
| CO11(22) | 51 / Anfang | 1,9 | -0,9 | 2,5 | 0,0 | 0,0 | 0,0 |
| | 177 / Anfang | -0,9 | -1,9 | -2,5 | 0,0 | 0,0 | 0,0 |
| CO11(23) | 51 / Anfang | 3,2 | 1,9 | 10,9 | 0,0 | 0,0 | -1,2 |
| | 177 / Anfang | 2,0 | -3,2 | -10,9 | 0,0 | 0,0 | 1,2 |
| CO11(24) | 51 / Anfang | 1,2 | 3,0 | 6,5 | 0,0 | 0,0 | -1,5 |
| | 177 / Anfang | 3,1 | -1,2 | -6,5 | 0,0 | 0,0 | 1,5 |
| CO11(25) | 51 / Anfang | 4,2 | 0,2 | 7,8 | 0,0 | 0,0 | -0,6 |
| | 177 / Anfang | 0,3 | -4,2 | -7,8 | 0,0 | 0,0 | 0,6 |
| CO11(26) | 51 / Anfang | 1,2 | 3,0 | 4,6 | 0,0 | 0,0 | -1,5 |
| | 177 / Anfang | 3,0 | -1,2 | -4,6 | 0,0 | 0,0 | 1,5 |
| CO11(27) | 51 / Anfang | 0,8 | -1,0 | 4,4 | 0,0 | 0,0 | 0,3 |
| | 177 / Anfang | -1,0 | -0,8 | -4,4 | 0,0 | 0,0 | -0,3 |
| CO11(28) | 51 / Anfang | 3,0 | 3,1 | 6,6 | 0,0 | 0,0 | -1,8 |
| | 177 / Anfang | 3,2 | -3,0 | -6,6 | 0,0 | 0,0 | 1,8 |
| CO11(3) | 51 / Anfang | 1,2 | 2,9 | 4,6 | 0,0 | 0,0 | -1,3 |
| | 177 / Anfang | 3,0 | -1,2 | -4,6 | 0,0 | 0,0 | 1,3 |
| CO11(4) | 51 / Anfang | 1,9 | -0,9 | 2,5 | 0,0 | 0,0 | 0,0 |
| | 177 / Anfang | -0,9 | -1,9 | -2,5 | 0,0 | 0,0 | 0,0 |
| CO11(5) | 51 / Anfang | 3,6 | 0,2 | 11,6 | 0,0 | 0,0 | -0,7 |
| | 177 / Anfang | 0,3 | -3,6 | -11,6 | 0,0 | 0,0 | 0,7 |
| CO11(6) | 51 / Anfang | 2,1 | 1,9 | 10,9 | 0,0 | 0,0 | -1,2 |
| | 177 / Anfang | 2,0 | -2,1 | -10,9 | 0,0 | 0,0 | 1,2 |
| CO11(9) | 51 / Anfang | 1,2 | 2,9 | 6,5 | 0,0 | 0,0 | -1,4 |
| | 177 / Anfang | 3,0 | -1,2 | -6,5 | 0,0 | 0,0 | 1,4 |
| CO11(11) | 51 / Anfang | 3,0 | 3,1 | 6,6 | 0,0 | 0,0 | -1,8 |
| | 177 / Anfang | 3,2 | -3,0 | -6,6 | 0,0 | 0,0 | 1,8 |
| CO11(15) | 51 / Anfang | 0,8 | -0,6 | 6,4 | 0,0 | 0,0 | 0,1 |
| | 177 / Anfang | -0,5 | -0,8 | -6,4 | 0,0 | 0,0 | -0,1 |

### Fehlende Lasten

| Name | X [kN] | Y [kN] | Z [kN] | Mx [kNm] | My [kNm] | Mz [kNm] |
|---|---|---|---|---|---|---|
| CO11(17) | 0,0 | 0,0 | 0,0 | -0,4 | 0,0 | 0,1 |
| CO11(18) | 0,0 | 0,0 | 0,0 | 0,0 | 0,0 | 0,0 |
| CO11(19) | 0,0 | 0,0 | 0,0 | -0,4 | 0,0 | 0,2 |
| CO9(20) | -0,8 | -0,8 | 0,0 | 0,0 | 0,0 | -0,1 |
| CO11(21) | 0,0 | 0,0 | 0,0 | -0,6 | 0,0 | 0,2 |
| CO11(22) | 0,0 | 0,0 | 0,0 | -0,1 | 0,0 | 0,1 |
| CO11(23) | 0,0 | 0,0 | 0,0 | -0,5 | 0,0 | 0,2 |
| CO11(24) | 0,0 | 0,0 | 0,0 | -0,3 | 0,0 | 0,1 |
| CO11(25) | 0,0 | 0,0 | 0,0 | -0,4 | 0,0 | 0,2 |
| CO11(26) | 0,0 | 0,0 | 0,0 | -0,2 | 0,0 | 0,1 |
| CO11(27) | 0,0 | 0,0 | 0,0 | -0,2 | 0,0 | 0,0 |
| CO11(28) | 0,0 | 0,0 | 0,0 | -0,3 | 0,0 | 0,1 |
| CO11(3) | 0,0 | 0,0 | 0,0 | -0,2 | 0,0 | 0,1 |
| CO11(4) | 0,0 | 0,0 | 0,0 | -0,1 | 0,0 | 0,1 |
| CO11(5) | 0,0 | 0,0 | 0,0 | -0,6 | 0,0 | 0,2 |
| CO11(6) | 0,0 | 0,0 | 0,0 | -0,5 | 0,0 | 0,1 |
| CO11(9) | 0,0 | 0,0 | 0,0 | -0,3 | 0,0 | 0,1 |
| CO11(11) | 0,0 | 0,0 | 0,0 | -0,3 | 0,0 | 0,1 |
| CO11(15) | 0,0 | 0,0 | 0,0 | -0,3 | 0,0 | 0,0 |

## Nachweis

### Übersicht

| Name | Wert | Nachweisstatus |
|---|---|---|
| Berechnung | 100,0% | OK |
| Platten | 0,0 < 5,0% | OK |
| Schrauben | 22,6 < 100% | OK |
| Schweißnähte | 79,2 < 100% | OK |
| Beulen | Nicht berechnet | |

### Platten

| Name | $t_p$ [mm] | Lasten | $\sigma_{Ed}$ [MPa] | $\varepsilon_{Pl}$ [%] | $\sigma_{c,Ed}$ [MPa] | Status |
|---|---|---|---|---|---|---|
| 51-bfl 1 | 8,5 | CO11(17) | 81,1 | 0,0 | 0,0 | OK |
| 51-tfl 1 | 8,5 | CO11(17) | 67,3 | 0,0 | 0,0 | OK |
| 51-w 1 | 5,6 | CO11(17) | 40,8 | 0,0 | 0,0 | OK |
| 177-bfl 1 | 8,5 | CO11(17) | 58,5 | 0,0 | 0,0 | OK |
| 177-tfl 1 | 8,5 | CO11(28) | 66,6 | 0,0 | 0,0 | OK |
| 177-w 1 | 5,6 | CO11(17) | 23,8 | 0,0 | 0,0 | OK |
| Verschobene Stirnplatte1a | 12,0 | CO11(17) | 123,6 | 0,0 | 68,6 | OK |
| Verschobene Stirnplatte1b | 15,0 | CO11(17) | 79,1 | 0,0 | 68,6 | OK |
| STEIFF | 10,0 | CO11(17) | 49,4 | 0,0 | 0,0 | OK |

### Bemessungsdaten

| Material | $f_y$ [MPa] | $\varepsilon_{lim}$ [%] |
|---|---|---|
| S 355 | 355,0 | 5,0 |

### Erläuterung von Symbolen

| | |
|---|---|
| $t_p$ | Plattendicke |
| $\sigma_{Ed}$ | Vergleichsspannung |
| $\varepsilon_{Pl}$ | Plastische Dehnung |
| $\sigma_{c,Ed}$ | Kontaktspannung |
| $f_y$ | Streckgrenze |
| $\varepsilon_{lim}$ | Grenzwert plastische Dehnung |

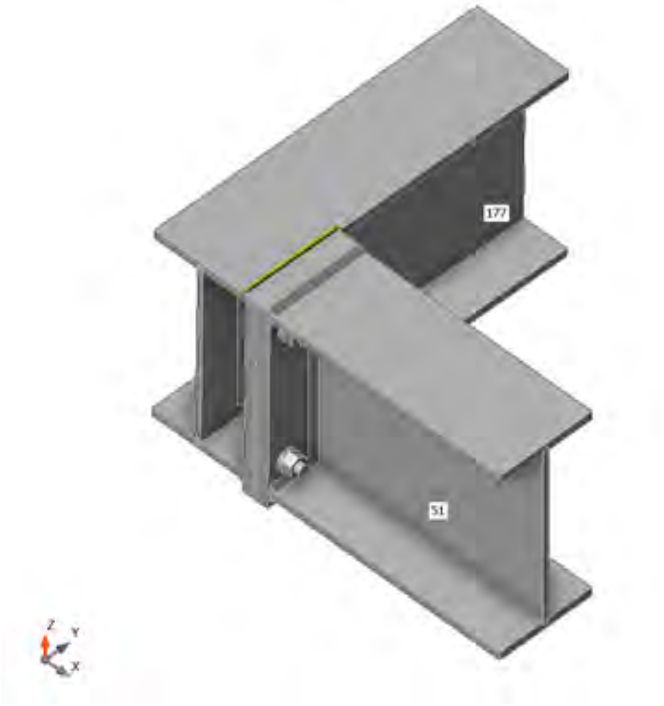


*Gesamt, CO11(17)*

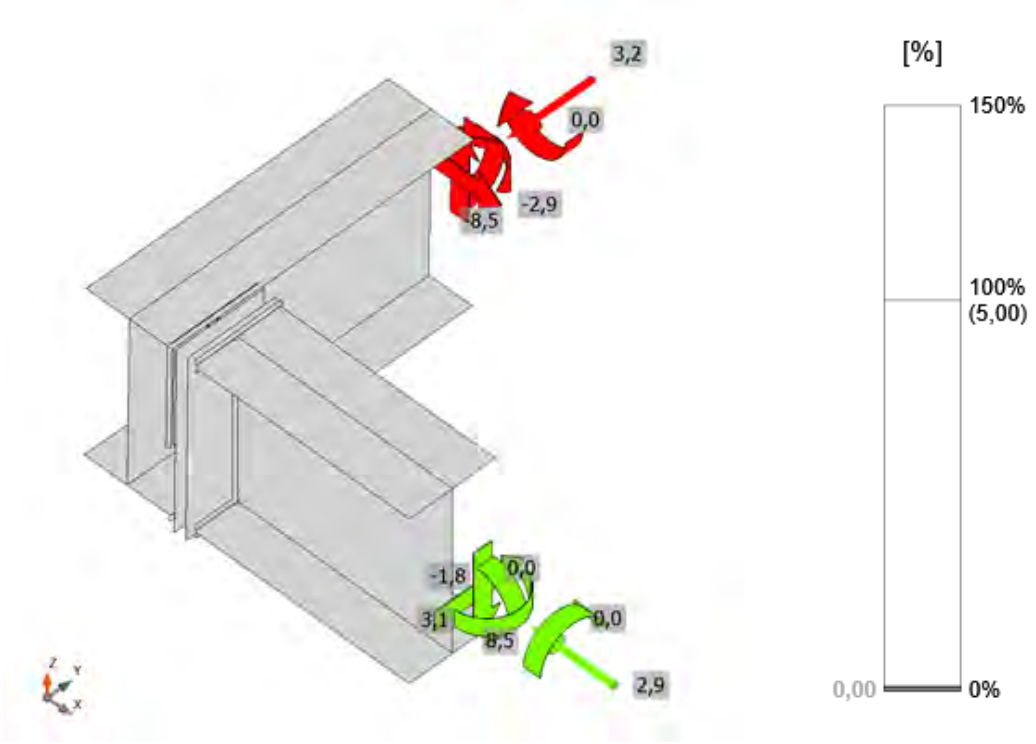


*Dehnung, CO11(17)*

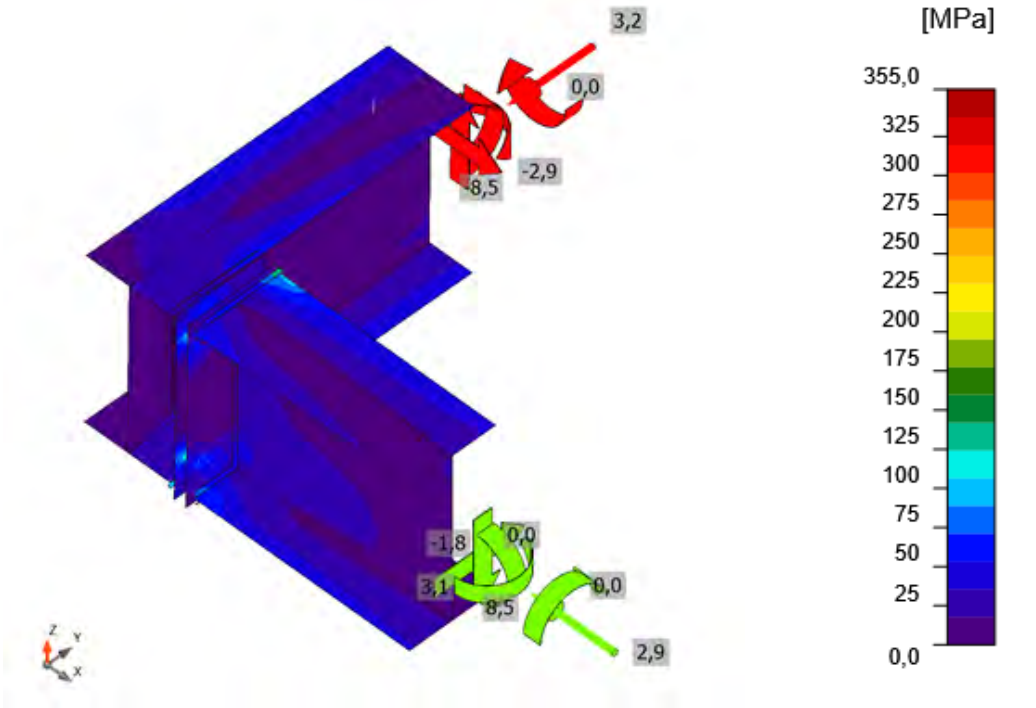


*Vergleichsspannung, CO11(17)*

## Schrauben

| Form | Position | Klasse | Lasten | $F_{t,Ed}$ [kN] | $F_{v,Ed}$ [kN] | $F_{b,Rd}$ [kN] | $Ut_t$ [%] | $Ut_s$ [%] | $Ut_{ts}$ [%] | Konstruktionsregeln | Status |
|---|---|---|---|---|---|---|---|---|---|---|---|
| 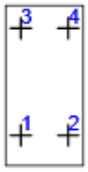 | B1 | M12 8.8 - 1 | CO11(17) | 10,8 | 2,2 | 120,9 | 22,2 | 6,7 | 22,6 | OK | OK |
| | B2 | M12 8.8 - 1 | CO9(20) | 6,6 | 0,1 | 90,5 | 13,6 | 0,2 | 9,9 | OK | OK |
| | B3 | M12 8.8 - 1 | CO11(17) | 8,3 | 2,3 | 117,7 | 17,1 | 7,0 | 19,3 | OK | OK |
| | B4 | M12 8.8 - 1 | CO9(20) | 6,6 | 0,1 | 90,5 | 13,7 | 0,2 | 10,0 | OK | OK |



**Bemessungsdaten**

| Klasse | $F_{t,Rd}$ [kN] | $B_{p,Rd}$ [kN] | $F_{v,Rd}$ [kN] |
|---|---|---|---|
| M12 8.8 - 1 | 48,6 | 168,6 | 32,4 |

**Erläuterung von Symbolen**

| | |
|---|---|
| $F_{t,Ed}$ | Zugkraft |
| $F_{v,Ed}$ | Resultierende der Schraubenscherkräfte Vy und Vz in Scherebenen |
| $F_{b,Rd}$ | Lochleibungstragfähigkeit der Platte nach EN 1993-1-8 Tab. 3.4 |
| $Ut_t$ | Ausnutzung unter Zug |
| $Ut_s$ | Ausnutzung unter Schub |
| $Ut_{ts}$ | Interaktion von Zug und Schub EN_1993-1-8 Tabelle 3.4 |
| $F_{t,Rd}$ | Zugtragfähigkeit der Schraube nach EN 1993-1-8 Tabelle 3.4 |
| $B_{p,Rd}$ | Durchstanztragfähigkeit nach EN 1993-1-8 Tabelle 3.4 |
| $F_{v,Rd}$ | Schertragfähigkeit der Schraube nach EN 1993-1-8 Tabelle 3.4 |

## Schweißnähte

| Position | Kante | $T_w$ [mm] | L [mm] | Lasten | $\sigma_{w,Ed}$ [MPa] | $\varepsilon_{Pl}$ [%] | $\sigma_{\perp}$ [MPa] | $\tau_{\perp}$ [MPa] | $\tau_{\parallel}$ [MPa] | Ut [%] | $Ut_c$ [%] | Konstruktionsregeln | Status |
|---|---|---|---|---|---|---|---|---|---|---|---|---|---|
| Verschobene Stirnplatte1a | 177-tfl 1 | ◢ 4,0 | 101 | CO11(28) | 344,9 | 0,0 | -160,5 | 168,4 | -51,9 | 79,2 | 40,4 | OK | OK |
| Verschobene Stirnplatte1a | 177-bfl 1 | ◢ 4,0 | 101 | CO11(17) | 323,5 | 0,0 | -157,5 | -160,7 | 27,8 | 74,3 | 37,4 | OK | OK |
| Verschobene Stirnplatte1b | 51-bfl 1 | ◢ 4,0 ◣ | 100 | CO11(17) | 146,1 | 0,0 | -65,8 | -61,7 | 43,2 | 33,6 | 20,3 | OK | OK |
| | | ◢ 4,0 ◣ | 100 | CO11(17) | 137,8 | 0,0 | -60,0 | 64,1 | -32,0 | 31,6 | 18,1 | OK | OK |
| Verschobene Stirnplatte1b | 51-tfl 1 | ◢ 4,0 ◣ | 100 | CO11(28) | 120,2 | 0,0 | -50,7 | -52,9 | 34,2 | 27,6 | 16,3 | OK | OK |
| | | ◢ 4,0 ◣ | 100 | CO11(28) | 116,6 | 0,0 | -49,9 | 47,8 | -37,7 | 26,8 | 15,7 | OK | OK |
| Verschobene Stirnplatte1b | 51-w 1 | ◢ 4,0 ◣ | 190 | CO11(17) | 28,8 | 0,0 | 1,9 | 7,5 | -14,8 | 6,6 | 6,5 | OK | OK |
| | | ◢ 4,0 ◣ | 190 | CO11(17) | 39,2 | 0,0 | 9,3 | -6,8 | 20,9 | 9,0 | 8,5 | OK | OK |
| 177-bfl 1 | STEIFF | ◢ 4,0 ◣ | 35 | CO11(17) | 47,7 | 0,0 | 1,3 | -2,5 | 27,4 | 10,9 | 10,0 | OK | OK |
| | | ◢ 4,0 ◣ | 35 | CO11(17) | 83,3 | 0,0 | 3,4 | 25,9 | -40,5 | 19,1 | 12,3 | OK | OK |
| 177-w 1 | STEIFF | ◢ 4,0 ◣ | 159 | CO11(17) | 38,2 | 0,0 | 5,4 | 0,9 | -21,8 | 8,8 | 6,7 | OK | OK |
| | | ◢ 4,0 ◣ | 159 | CO11(17) | 34,1 | 0,0 | -1,2 | -3,3 | 19,4 | 7,8 | 6,3 | OK | OK |
| 177-tfl 1 | STEIFF | ◢ 4,0 ◣ | 35 | CO11(28) | 37,1 | 0,0 | 6,8 | -9,2 | -18,9 | 8,5 | 8,5 | OK | OK |
| | | ◢ 4,0 ◣ | 35 | CO11(28) | 36,2 | 0,0 | -4,5 | 3,6 | 20,4 | 8,3 | 8,0 | OK | OK |
| Verschobene Stirnplatte1a | STEIFF | ◢ 4,0 ◣ | 182 | CO11(17) | 83,8 | 0,0 | 20,5 | -41,5 | -21,9 | 19,2 | 12,4 | OK | OK |
| | | ◢ 4,0 ◣ | 182 | CO11(28) | 92,5 | 0,0 | -9,8 | -52,5 | 8,0 | 21,2 | 15,2 | OK | OK |

**Bemessungsdaten**

| Material | $f_u$ [MPa] | $\beta_w$ [-] | $\sigma_{w,Rd}$ [MPa] | 0.9 $\sigma$ [MPa] |
|---|---|---|---|---|
| S 355 | 490,0 | 0,90 | 435,6 | 352,8 |

**Erläuterung von Symbolen**

| | |
|---|---|
| $T_w$ | Nahtdicke a |
| L | Länge |
| $\sigma_{w,Ed}$ | Vergleichsspannung |
| $\varepsilon_{Pl}$ | Dehnung |
| $\sigma_{\perp}$ | Senkrechte Spannung |
| $\tau_{\perp}$ | Scherspannung senkrecht zur Schweißnahtachse |
| $\tau_{\parallel}$ | Scherspannung parallel zur Schweißnahtachse |
| Ut | Ausnutzung |
| $Ut_c$ | Schätzung der Schweißnahtkapazität |
| ◢ | Kehlnaht |
| $f_u$ | Grenzfestigkeit der Schweißnaht |
| $\beta_w$ | Korrelationsfaktor nach EN 1993-1-8 Tab. 4.1 |
| $\sigma_{w,Rd}$ | Tragfähigkeit der Schweißnaht |
| 0.9 σ | Senkrechter Spannungswiderstand - 0.9*fu / γM2 |

### Beulen

**Die Beulanalyse wurde nicht berechnet.**

## Normeinstellungen

| Position | Wert | Einheit | Bezug |
|---|---|---|---|
| Sicherheitsfaktor $\gamma_{M0}$ | 1,00 | - | EN 1993-1-1 – 6.1 |
| Sicherheitsfaktor $\gamma_{M1}$ | 1,00 | - | EN 1993-1-1 – 6.1 |
| Sicherheitsfaktor $\gamma_{M2}$ | 1,25 | - | EN 1993-1-1 – 6.1 |
| Sicherheitsfaktor $\gamma_{M3}$ | 1,25 | - | EN 1993-1-8 – Table 2.1 |
| Sicherheitsfaktor $\gamma_C$ | 1,50 | - | EN 1992-1-1 – 2.4.2.4 |
| Sicherheitsfaktor $\gamma_{Inst}$ | 1,20 | - | EN 1992-4 – Table 4.1 |
| Verbindungskoeffizient βj | 0,67 | - | EN 1993-1-8 – 6.2.5(7) |
| Wirksame Fläche - Einfluss der Netzgröße | 0,10 | - | |
| Reibungsbeiwert - Beton | 0,25 | - | EN 1993-1-8 |
| Reibungskoeffizient bei gleitfesten Verbindungen | 0,30 | - | EN 1993-1-8 – Table 3.7 |
| Plastische Dehnung - Grenzwert | 0,05 | - | EN 1993-1-5 |
| Konstruktionsregeln | Ja | | |
| Distance between bolts [d0] | 2,20 | - | EN 1993-1-8 – Table 3.3 |
| Distance between bolts and edge [d0] | 1,20 | - | EN 1993-1-8 – Table 3.3 |
| Nachweis der Tragfähigkeit bei Betonausbruch | Beide | | |
| Berechnetes αb für Lochleibungsnachweis anwenden. | Ja | | EN 1993-1-8 – Table 3.4 |
| Gerissener Beton | Ja | | EN 1992-4 |
| Überprüfen der lokalen Verformung | Ja | | |
| Lokale Verformung - Grenzwert | 0,03 | - | CIDECT DG 1, 3 – 1.1 |
| Geometrische Nichtlinearität (GMNA) | Ja | | Analyse mit großen Verformungen für Verbindungen mit Hohlprofilen |
| Ausgesteiftes System | Nein | | EN 1993-1-8 – 5.2.2.5 |

| | |
|---|---|
| **Projekt:** | **IdeaStatiCa-Stadion_Fazanerija_JK-5_BR - 51** |
| **Projektnummer:** | **Detajl D9-O1** |
| **Autor:** | **mag. Igor Gorup dipl. ing.** |

## Projektdaten

| | |
|---|---|
| Projektname | IdeaStatiCa-Stadion_Fazanerija_JK-5_BR - 51 |
| Projektnummer | Detajl D9-O1 |
| Autor | mag. Igor Gorup dipl. ing. |
| Beschreibung | |
| Datum | 14.06.2025 |
| Norm | EN |

## Material

| | |
|---|---|
| Stahl | Baustahl S 355, Baustahl S 235, S 355 |

# Projektposition 51

## Bemessung

| | |
|---|---|
| Name | 51 |
| Beschreibung | |
| Berechnung | Spannung, Dehnung/ Lasten im Gleichgewicht |

### Bauteile

#### Geometrie

| Name | Querschnitt | β – Rotation [°] | Y - Rotation [°] | α - Rotation [°] | Abstand ex [mm] | Abstand ey [mm] | Abstand ez [mm] |
|---|---|---|---|---|---|---|---|
| 52 | 480 - IPE200 | -90,0 | 0,8 | -180,0 | 200 | 0 | 0 |
| 176 | 479 - HEA200 | 0,0 | 90,0 | -90,0 | 0 | 0 | 0 |

#### Auflager und Kräfte

| Name | Auflager | Kräfte in | X [mm] |
|---|---|---|---|
| 52 / anfang | | Position | 0 |
| 176 / anfang | N-Vy-Vz-Mx-My-Mz | Position | 0 |

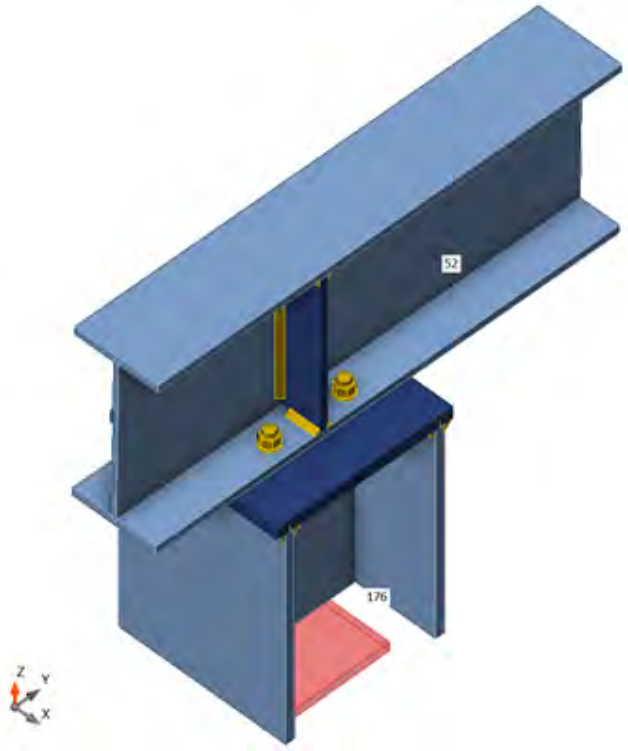


### Querschnitte

| Name | Material |
|---|---|
| 480 - IPE200 | S 355 |
| 479 - HEA200 | Baustahl S 355 |

## Schrauben

| Name | Durchmesser [mm] | $f_y$ [MPa] | $f_u$ [MPa] | Bruttofläche [$mm^2$] |
|---|---|---|---|---|
| M12 8.8 | 12 | 640,0 | 800,0 | 113 |

## Lasteinwirkungen (Kräfte im Gleichgewicht)

| Name | Bauteil | N [kN] | Vy [kN] | Vz [kN] | Mx [kNm] | My [kNm] | Mz [kNm] |
|---|---|---|---|---|---|---|---|
| CO11(25) | 52 / Anfang | -2,7 | 1,9 | 8,1 | 0,0 | 8,2 | -1,8 |
| | 176 / Anfang | 21,3 | 5,9 | -2,9 | 0,0 | 0,0 | 0,0 |
| CO9(26) | 52 / Anfang | 5,3 | 0,7 | -1,2 | 0,0 | 0,0 | 0,1 |
| | 176 / Anfang | -1,3 | -1,3 | 4,5 | 0,0 | 0,0 | 0,0 |
| CO11(27) | 52 / Anfang | 0,7 | 2,1 | 2,5 | 0,0 | 4,9 | -1,5 |
| | 176 / Anfang | 10,3 | 6,7 | -1,2 | 0,0 | 0,0 | 0,0 |
| CO11(28) | 52 / Anfang | -6,0 | 2,9 | 3,1 | 0,0 | 1,9 | -1,8 |
| | 176 / Anfang | 6,4 | 6,1 | -5,0 | 0,0 | 0,0 | 0,0 |
| CO11(29) | 52 / Anfang | 0,4 | 1,9 | 0,5 | 0,0 | 4,9 | -1,2 |
| | 176 / Anfang | 8,3 | 6,0 | -1,6 | 0,0 | 0,0 | 0,0 |
| CO11(30) | 52 / Anfang | 1,2 | 2,1 | 4,5 | 0,0 | 4,9 | -1,5 |
| | 176 / Anfang | 12,3 | 6,8 | -0,8 | 0,0 | 0,0 | 0,0 |
| CO11(31) | 52 / Anfang | -1,9 | 1,7 | 2,2 | 0,0 | 5,4 | -1,7 |
| | 176 / Anfang | 10,7 | 5,5 | -2,2 | 0,0 | 0,0 | 0,0 |
| CO11(32) | 52 / Anfang | 3,9 | 0,9 | 1,6 | 0,0 | 3,2 | 0,1 |
| | 176 / Anfang | 6,7 | 3,4 | 0,9 | 0,0 | 0,0 | 0,0 |
| CO11(33) | 52 / Anfang | -3,8 | 2,5 | 3,5 | 0,0 | 3,3 | -1,9 |
| | 176 / Anfang | 8,8 | 6,4 | -3,4 | 0,0 | 0,0 | 0,0 |
| CO11(34) | 52 / Anfang | -4,7 | 2,6 | 4,9 | 0,0 | 1,9 | -1,7 |
| | 176 / Anfang | 8,2 | 5,8 | -3,7 | 0,0 | 0,0 | 0,0 |
| CO11(35) | 52 / Anfang | 1,3 | 1,6 | 0,2 | 0,0 | 4,9 | -1,0 |
| | 176 / Anfang | 8,0 | 5,7 | -0,7 | 0,0 | 0,0 | 0,0 |
| CO11(15) | 52 / Anfang | 4,4 | 0,6 | 2,2 | 0,0 | 4,6 | 0,3 |
| | 176 / Anfang | 9,7 | 3,1 | 1,4 | 0,0 | 0,0 | 0,0 |
| CO11(16) | 52 / Anfang | -2,1 | 2,2 | 6,5 | 0,0 | 5,4 | -2,2 |
| | 176 / Anfang | 15,0 | 6,6 | -2,2 | 0,0 | 0,0 | 0,0 |
| CO11(17) | 52 / Anfang | 1,8 | 0,6 | -1,4 | 0,0 | 3,5 | -0,2 |
| | 176 / Anfang | 4,2 | 2,9 | -0,1 | 0,0 | 0,0 | 0,0 |
| CO11(19) | 52 / Anfang | -5,5 | 2,9 | 5,1 | 0,0 | 1,9 | -1,8 |
| | 176 / Anfang | 8,5 | 6,1 | -4,5 | 0,0 | 0,0 | 0,0 |
| CO11(20) | 52 / Anfang | 1,7 | 1,0 | 5,9 | 0,0 | 7,7 | -0,4 |
| | 176 / Anfang | 18,4 | 4,0 | -0,2 | 0,0 | 0,0 | 0,0 |
| CO11(21) | 52 / Anfang | -2,5 | 2,2 | 4,5 | 0,0 | 5,4 | -2,1 |
| | 176 / Anfang | 13,0 | 6,6 | -2,7 | 0,0 | 0,0 | 0,0 |
| CO11(22) | 52 / Anfang | 4,3 | 0,6 | -0,7 | 0,0 | 3,2 | 0,3 |
| | 176 / Anfang | 4,4 | 3,1 | 1,3 | 0,0 | 0,0 | 0,0 |
| CO11(23) | 52 / Anfang | -3,4 | 2,5 | 5,5 | 0,0 | 3,3 | -2,0 |
| | 176 / Anfang | 10,9 | 6,5 | -2,9 | 0,0 | 0,0 | 0,0 |
| CO11(24) | 52 / Anfang | 0,6 | 1,8 | 6,2 | 0,0 | 7,7 | -1,2 |
| | 176 / Anfang | 18,7 | 6,0 | -1,4 | 0,0 | 0,0 | 0,0 |
| CO11(1) | 52 / Anfang | 4,0 | 1,5 | 3,8 | 0,0 | 6,0 | -0,6 |
| | 176 / Anfang | 13,5 | 5,8 | 0,8 | 0,0 | 0,0 | 0,0 |
| CO11(2) | 52 / Anfang | -4,9 | 2,0 | 3,4 | 0,0 | 0,5 | -0,9 |
| | 176 / Anfang | 4,6 | 3,3 | -3,7 | 0,0 | 0,0 | 0,0 |

| Name | Bauteil | N [kN] | Vy [kN] | Vz [kN] | Mx [kNm] | My [kNm] | Mz [kNm] |
|---|---|---|---|---|---|---|---|
| CO11(11) | 52 / Anfang | -5,7 | 2,3 | 5,9 | 0,0 | 3,3 | -1,2 |
| | 176 / Anfang | 11,6 | 4,4 | -4,6 | 0,0 | 0,0 | 0,0 |
| CO11(12) | 52 / Anfang | 3,9 | 1,5 | 1,0 | 0,0 | 4,6 | -0,6 |
| | 176 / Anfang | 8,3 | 5,8 | 0,7 | 0,0 | 0,0 | 0,0 |

### Fehlende Lasten

| Name | X [kN] | Y [kN] | Z [kN] | Mx [kNm] | My [kNm] | Mz [kNm] |
|---|---|---|---|---|---|---|
| CO11(25) | 3,9 | -0,3 | 13,2 | -6,6 | 0,0 | 1,5 |
| CO9(26) | -2,0 | -0,8 | 0,0 | -0,2 | 0,0 | -0,3 |
| CO11(27) | 4,6 | -2,0 | 7,8 | -4,4 | 0,0 | 1,0 |
| CO11(28) | 3,2 | 1,0 | 3,2 | -1,3 | 0,0 | 1,2 |
| CO11(29) | 4,1 | -2,0 | 7,8 | -4,8 | 0,0 | 0,8 |
| CO11(30) | 4,7 | -2,0 | 7,8 | -4,0 | 0,0 | 1,0 |
| CO11(31) | 3,8 | -0,3 | 8,5 | -4,9 | 0,0 | 1,4 |
| CO11(32) | 2,5 | -3,0 | 5,2 | -2,9 | 0,0 | -0,3 |
| CO11(33) | 3,9 | 0,4 | 5,3 | -2,6 | 0,0 | 1,4 |
| CO11(34) | 3,2 | 1,0 | 3,2 | -0,9 | 0,0 | 1,2 |
| CO11(35) | 4,1 | -2,0 | 7,8 | -4,9 | 0,0 | 0,7 |
| CO11(15) | 2,5 | -3,1 | 7,5 | -4,2 | 0,0 | -0,4 |
| CO11(16) | 4,4 | -0,3 | 8,5 | -4,1 | 0,0 | 1,7 |
| CO11(17) | 2,3 | -1,9 | 5,6 | -3,8 | 0,0 | 0,0 |
| CO11(19) | 3,2 | 1,0 | 3,2 | -0,9 | 0,0 | 1,2 |
| CO11(20) | 3,0 | -2,0 | 12,6 | -6,6 | 0,0 | 0,3 |
| CO11(21) | 4,3 | -0,3 | 8,5 | -4,5 | 0,0 | 1,7 |
| CO11(22) | 2,5 | -3,0 | 5,2 | -3,3 | 0,0 | -0,4 |
| CO11(23) | 3,9 | 0,4 | 5,3 | -2,2 | 0,0 | 1,5 |
| CO11(24) | 4,2 | -2,0 | 12,5 | -6,5 | 0,0 | 0,8 |
| CO11(1) | 4,4 | -3,2 | 9,7 | -5,3 | 0,0 | 0,3 |
| CO11(2) | 1,4 | 1,1 | 1,1 | 0,2 | 0,0 | 0,5 |
| CO11(11) | 2,1 | 1,1 | 5,6 | -2,1 | 0,0 | 0,8 |
| CO11(12) | 4,3 | -3,2 | 7,4 | -4,4 | 0,0 | 0,3 |

## Nachweis

### Übersicht

| Name | Wert | Nachweisstatus |
|---|---|---|
| Berechnung | 100,0% | OK |
| Platten | 0,0 < 5,0% | OK |
| Schrauben | 55,5 < 100% | OK |
| Schweißnähte | 35,4 < 100% | OK |
| Beulen | Nicht berechnet | |

## Platten

| Name | Material | $t_p$ [mm] | Lasten | $\sigma_{Ed}$ [MPa] | $\varepsilon_{Pl}$ [%] | $\sigma_{c,Ed}$ [MPa] | Status |
|---|---|---|---|---|---|---|---|
| 52-bfl 1 | S 355 | 8,5 | CO11(21) | 54,1 | 0,0 | 0,0 | OK |
| 52-tfl 1 | S 355 | 8,5 | CO11(25) | 355,1 | 0,0 | 60,3 | OK |
| 52-w 1 | S 355 | 5,6 | CO11(25) | 190,7 | 0,0 | 0,0 | OK |
| 176-bfl 1 | Baustahl S 355 | 10,0 | CO11(21) | 114,9 | 0,0 | 0,0 | OK |
| 176-tfl 1 | Baustahl S 355 | 10,0 | CO11(25) | 127,4 | 0,0 | 0,0 | OK |
| 176-w 1 | Baustahl S 355 | 6,5 | CO11(25) | 95,2 | 0,0 | 0,0 | OK |
| Stirnblech1 | S 355 | 15,0 | CO11(25) | 161,7 | 0,0 | 80,5 | OK |
| Rippe1a | S 355 | 10,0 | CO11(20) | 85,7 | 0,0 | 0,0 | OK |
| Rippe1b | S 355 | 10,0 | CO11(25) | 182,2 | 0,0 | 0,0 | OK |

### Bemessungsdaten

| Material | $f_y$ [MPa] | $\varepsilon_{lim}$ [%] |
|---|---|---|
| S 355 | 355,0 | 5,0 |
| Baustahl S 355 | 355,0 | 5,0 |

### Erläuterung von Symbolen

| | |
|---|---|
| $t_p$ | Plattendicke |
| $\sigma_{Ed}$ | Vergleichsspannung |
| $\varepsilon_{Pl}$ | Plastische Dehnung |
| $\sigma_{c,Ed}$ | Kontaktspannung |
| $f_y$ | Streckgrenze |
| $\varepsilon_{lim}$ | Grenzwert plastische Dehnung |

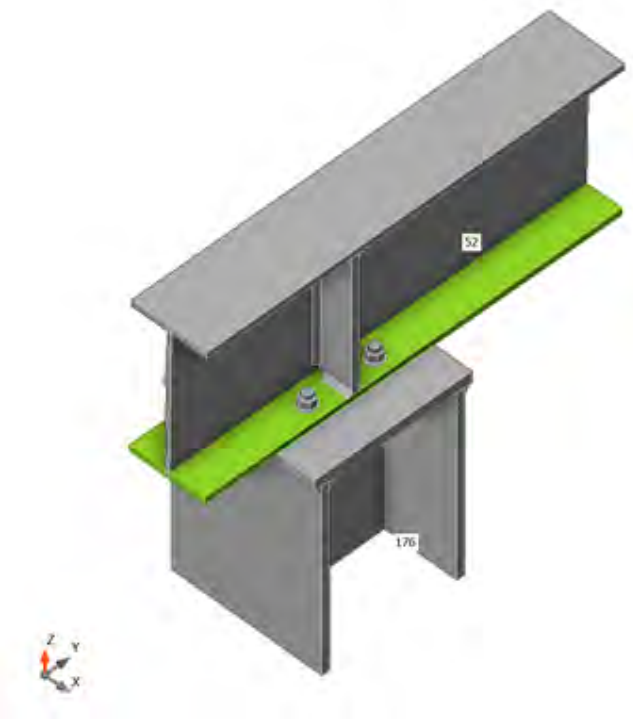


*Gesamt, CO11(25)*

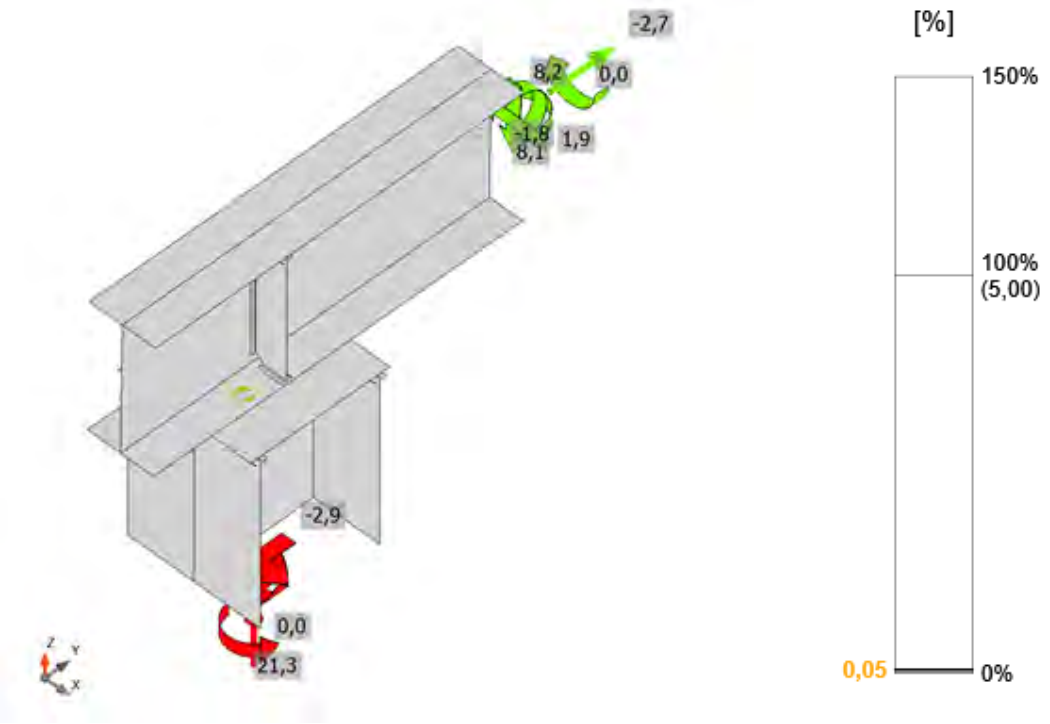


*Dehnung, CO11(25)*

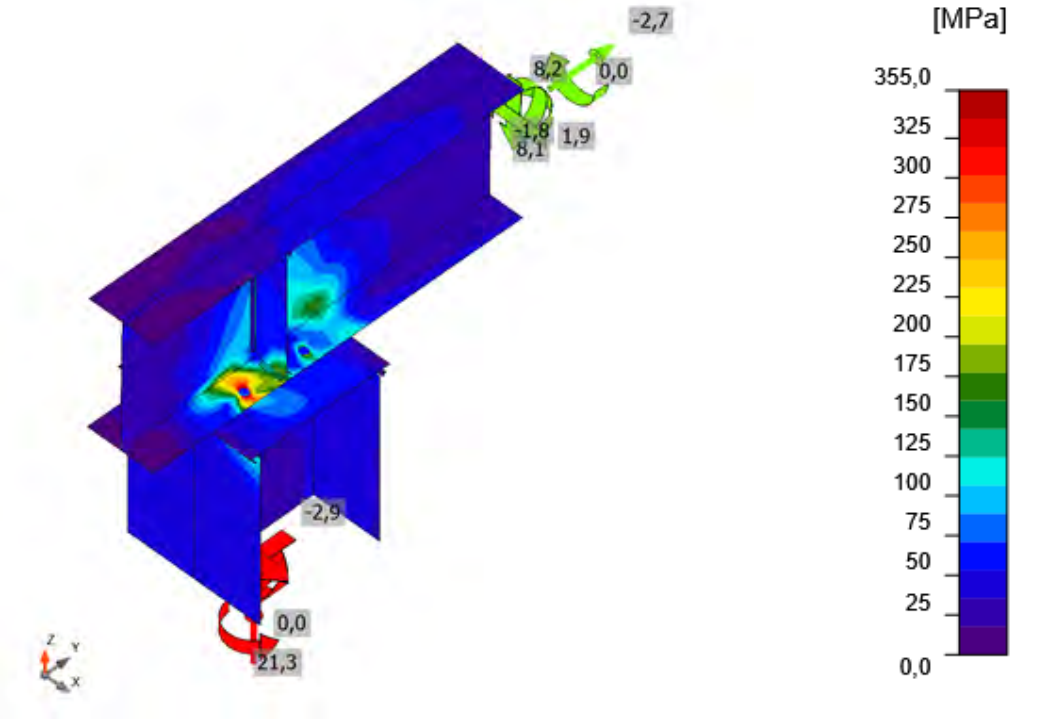


*Vergleichsspannung, CO11(25)*

## Schrauben

| Form | Position | Klasse | Lasten | $F_{t,Ed}$ [kN] | $F_{v,Ed}$ [kN] | $F_{b,Rd}$ [kN] | $Ut_t$ [%] | $Ut_s$ [%] | $Ut_{ts}$ [%] | Konstruktionsregeln | Status |
|---|---|---|---|---|---|---|---|---|---|---|---|
| 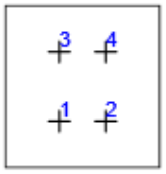 | B1 | M12 8.8 - 1 | CO11(21) | 2,7 | 8,2 | 100,0 | 5,5 | 25,2 | 29,2 | OK | OK |
| | B2 | M12 8.8 - 1 | CO11(21) | 4,6 | 8,6 | 52,1 | 9,5 | 26,5 | 33,3 | OK | OK |
| | B3 | M12 8.8 - 1 | CO11(25) | 21,6 | 6,3 | 51,3 | 44,5 | 19,5 | 51,3 | OK | OK |
| | B4 | M12 8.8 - 1 | CO11(25) | 24,1 | 6,5 | 100,0 | 49,7 | 20,0 | 55,5 | OK | OK |



### Bemessungsdaten

| Klasse | $F_{t,Rd}$ [kN] | $B_{p,Rd}$ [kN] | $F_{v,Rd}$ [kN] |
|---|---|---|---|
| M12 8.8 - 1 | 48,6 | 119,4 | 32,4 |

### Erläuterung von Symbolen

| | |
|---|---|
| $F_{t,Ed}$ | Zugkraft |
| $F_{v,Ed}$ | Resultierende der Schraubenscherkräfte Vy und Vz in Scherebenen |
| $F_{b,Rd}$ | Lochleibungstragfähigkeit der Platte nach EN 1993-1-8 Tab. 3.4 |
| $Ut_t$ | Ausnutzung unter Zug |
| $Ut_s$ | Ausnutzung unter Schub |
| $Ut_{ts}$ | Interaktion von Zug und Schub EN_1993-1-8 Tabelle 3.4 |
| $F_{t,Rd}$ | Zugtragfähigkeit der Schraube nach EN 1993-1-8 Tabelle 3.4 |
| $B_{p,Rd}$ | Durchstanztragfähigkeit nach EN 1993-1-8 Tabelle 3.4 |
| $F_{v,Rd}$ | Schertragfähigkeit der Schraube nach EN 1993-1-8 Tabelle 3.4 |

## Schweißnähte

| Position | Kante | $T_w$ [mm] | L [mm] | Lasten | $\sigma_{w,Ed}$ [MPa] | $\varepsilon_{Pl}$ [%] | $\sigma_{\perp}$ [MPa] | $\tau_{\perp}$ [MPa] | $\tau_{\parallel}$ [MPa] | Ut [%] | $Ut_c$ [%] | Konstruktionsregeln | Status |
|---|---|---|---|---|---|---|---|---|---|---|---|---|---|
| Stirnblech1 | 176-bfl 1 | ◢ 6,0 ◣ | 198 | CO11(21) | 59,8 | 0,0 | 23,3 | 14,3 | -28,4 | 13,7 | 10,5 | OK | OK |
| | | ◢ 6,0 ◣ | 198 | CO11(21) | 56,9 | 0,0 | -5,8 | 6,1 | -32,1 | 13,1 | 8,5 | OK | OK |
| Stirnblech1 | 176-tfl 1 | ◢ 6,0 ◣ | 198 | CO11(25) | 141,4 | 0,0 | -67,9 | -57,5 | -42,8 | 32,5 | 18,4 | OK | OK |
| | | ◢ 6,0 ◣ | 198 | CO11(25) | 126,7 | 0,0 | -50,9 | 63,5 | -21,5 | 29,1 | 17,7 | OK | OK |
| Stirnblech1 | 176-w 1 | ◢ 6,0 ◣ | 178 | CO11(25) | 91,0 | 0,0 | 28,8 | 28,4 | 40,9 | 20,9 | 14,1 | OK | OK |
| | | ◢ 6,0 ◣ | 179 | CO11(25) | 89,4 | 0,0 | -16,9 | 12,7 | 49,1 | 20,5 | 13,0 | OK | OK |
| 52-bfl 1 | Rippe1a | ◢ 4,0 ◣ | 35 | CO11(16) | 26,1 | 0,0 | 19,6 | 9,9 | 1,1 | 6,0 | 6,0 | OK | OK |
| | | ◢ 4,0 ◣ | 35 | CO11(16) | 29,6 | 0,0 | -21,8 | 11,5 | 0,8 | 6,8 | 6,5 | OK | OK |
| 52-w 1 | Rippe1a | ◢ 4,0 ◣ | 158 | CO11(21) | 47,5 | 0,0 | 0,1 | -1,1 | -27,4 | 10,9 | 8,8 | OK | OK |
| | | ◢ 4,0 ◣ | 158 | CO11(16) | 40,3 | 0,0 | 0,0 | -1,2 | -23,2 | 9,2 | 7,8 | OK | OK |
| 52-tfl 1 | Rippe1a | ◢ 4,0 ◣ | 35 | CO11(20) | 85,0 | 0,0 | 51,7 | 26,9 | 28,2 | 19,5 | 16,4 | OK | OK |
| | | ◢ 4,0 ◣ | 35 | CO11(21) | 35,8 | 0,0 | 21,6 | -16,2 | -3,3 | 8,2 | 7,3 | OK | OK |
| 52-bfl 1 | Rippe1b | ◢ 4,0 ◣ | 35 | CO11(21) | 35,1 | 0,0 | 24,3 | 14,4 | 2,3 | 8,1 | 8,1 | OK | OK |
| | | ◢ 4,0 ◣ | 35 | CO11(21) | 32,0 | 0,0 | -22,3 | 13,0 | -2,3 | 7,4 | 7,4 | OK | OK |
| 52-w 1 | Rippe1b | ◢ 4,0 ◣ | 158 | CO11(21) | 54,0 | 0,0 | 10,4 | 7,5 | -29,6 | 12,4 | 10,4 | OK | OK |
| | | ◢ 4,0 ◣ | 158 | CO11(16) | 37,2 | 0,0 | -7,7 | 5,3 | -20,3 | 8,5 | 8,1 | OK | OK |
| 52-tfl 1 | Rippe1b | ◢ 4,0 ◣ | 35 | CO11(25) | 61,1 | 0,0 | -49,7 | 2,3 | -20,4 | 14,1 | 12,3 | OK | OK |
| | | ◢ 4,0 ◣ | 35 | CO11(25) | 154,4 | 0,0 | 105,1 | -50,4 | -41,5 | 35,4 | 30,0 | OK | OK |

**Bemessungsdaten**

| Material | $f_u$ [MPa] | $\beta_w$ [-] | $\sigma_{w,Rd}$ [MPa] | 0.9 σ [MPa] |
|---|---|---|---|---|
| S 355 | 490,0 | 0,90 | 435,6 | 352,8 |

**Erläuterung von Symbolen**

| | |
|---|---|
| $T_w$ | Nahtdicke a |
| L | Länge |
| $\sigma_{w,Ed}$ | Vergleichsspannung |
| $\varepsilon_{Pl}$ | Dehnung |
| $\sigma_{\perp}$ | Senkrechte Spannung |
| $\tau_{\perp}$ | Scherspannung senkrecht zur Schweißnahtachse |
| $\tau_{\parallel}$ | Scherspannung parallel zur Schweißnahtachse |
| Ut | Ausnutzung |
| $Ut_c$ | Schätzung der Schweißnahtkapazität |
| ◢ | Kehlnaht |
| $f_u$ | Grenzfestigkeit der Schweißnaht |
| $\beta_w$ | Korrelationsfaktor nach EN 1993-1-8 Tab. 4.1 |
| $\sigma_{w,Rd}$ | Tragfähigkeit der Schweißnaht |
| 0.9 σ | Senkrechter Spannungswiderstand - 0.9*fu / γM2 |

## Beulen

**Die Beulanalyse wurde nicht berechnet.**

# Normeinstellungen

| Position | Wert | Einheit | Bezug |
|---|---|---|---|
| Sicherheitsfaktor $\gamma_{M0}$ | 1,00 | - | EN 1993-1-1 – 6.1 |
| Sicherheitsfaktor $\gamma_{M1}$ | 1,00 | - | EN 1993-1-1 – 6.1 |
| Sicherheitsfaktor $\gamma_{M2}$ | 1,25 | - | EN 1993-1-1 – 6.1 |
| Sicherheitsfaktor $\gamma_{M3}$ | 1,25 | - | EN 1993-1-8 – Table 2.1 |
| Sicherheitsfaktor $\gamma_{C}$ | 1,50 | - | EN 1992-1-1 – 2.4.2.4 |
| Sicherheitsfaktor $\gamma_{Inst}$ | 1,20 | - | EN 1992-4 – Table 4.1 |
| Verbindungskoeffizient βj | 0,67 | - | EN 1993-1-8 – 6.2.5(7) |
| Wirksame Fläche - Einfluss der Netzgröße | 0,10 | - | |
| Reibungsbeiwert - Beton | 0,25 | - | EN 1993-1-8 |
| Reibungskoeffizient bei gleitfesten Verbindungen | 0,30 | - | EN 1993-1-8 – Table 3.7 |
| Plastische Dehnung - Grenzwert | 0,05 | - | EN 1993-1-5 |
| Konstruktionsregeln | Ja | | |
| Distance between bolts [d0] | 2,20 | - | EN 1993-1-8 – Table 3.3 |
| Distance between bolts and edge [d0] | 1,20 | - | EN 1993-1-8 – Table 3.3 |
| Nachweis der Tragfähigkeit bei Betonausbruch | Beide | | |
| Berechnetes αb für Lochleibungsnachweis anwenden. | Ja | | EN 1993-1-8 – Table 3.4 |
| Gerissener Beton | Ja | | EN 1992-4 |
| Überprüfen der lokalen Verformung | Ja | | |
| Lokale Verformung - Grenzwert | 0,03 | - | CIDECT DG 1, 3 – 1.1 |
| Geometrische Nichtlinearität (GMNA) | Ja | | Analyse mit großen Verformungen für Verbindungen mit Hohlprofilen |
| Ausgesteiftes System | Nein | | EN 1993-1-8 – 5.2.2.5 |

| | |
|---|---|
| **Projekt:** | **IdeaStatiCa-Stadion_Fazanerija_JK-5_BR - 1405** |
| **Projektnummer:** | **Detajl D10-O1** |
| **Autor:** | **mag. Igor Gorup dipl. ing.** |

## Projektdaten

| | |
|---|---|
| Projektname | IdeaStatiCa-Stadion_Fazanerija_JK-5_BR - 1405 |
| Projektnummer | Detajl D10-O1 |
| Autor | mag. Igor Gorup dipl. ing. |
| Beschreibung | |
| Datum | 14.06.2025 |
| Norm | EN |

## Material

| | |
|---|---|
| Stahl | Baustahl S 355, Baustahl S 235, S 355 |

# Projektposition 1405

## Bemessung

| | |
|---|---|
| Name | 1405 |
| Beschreibung | |
| Berechnung | Spannung, Dehnung/ Lasten im Gleichgewicht |

### Bauteile

#### Geometrie

| Name | Querschnitt | β – Rotation [°] | Y - Rotation [°] | α - Rotation [°] | Abstand ex [mm] | Abstand ey [mm] | Abstand ez [mm] |
|---|---|---|---|---|---|---|---|
| 97 | 480 - IPE200 | -90,0 | 0,8 | -180,0 | 0 | 0 | 0 |
| 174 | 480 - IPE200 | 0,0 | 0,0 | 179,2 | 0 | 0 | 0 |
| 474 | 335 - RO76.1X2.9 | 32,2 | -0,4 | -180,0 | 0 | 40 | -20 |

#### Auflager und Kräfte

| Name | Auflager | Kräfte in | X [mm] |
|---|---|---|---|
| 97 / anfang | N-Vy-Vz-Mx-My-Mz | Position | 0 |
| 97 / ende | | Position | 0 |
| 174 / ende | | Position | 0 |
| 474 / ende | Mx-My-Mz | Schrauben | 0 |

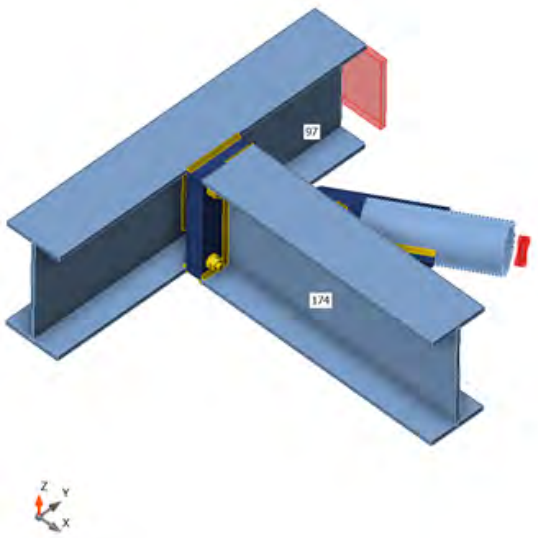


### Querschnitte

| Name | Material |
|---|---|
| 480 - IPE200 | S 355 |
| 335 - RO76.1X2.9 | Baustahl S 355 |

### Schrauben

| Name | Durchmesser [mm] | $f_y$ [MPa] | $f_u$ [MPa] | Bruttofläche [$mm^2$] |
|---|---|---|---|---|
| M12 8.8 | 12 | 640,0 | 800,0 | 113 |
| M20 8.8 | 20 | 640,0 | 800,0 | 314 |

## Lasteinwirkungen (Kräfte im Gleichgewicht)

| Name | Bauteil | N [kN] | Vy [kN] | Vz [kN] | Mx [kNm] | My [kNm] | Mz [kNm] |
|---|---|---|---|---|---|---|---|
| CO11(29) | 97 / Anfang | -11,2 | 1,9 | 0,2 | 0,0 | -4,7 | -0,2 |
| | 97 / Ende | 5,5 | 0,2 | -3,3 | 0,0 | 4,7 | -0,3 |
| | 174 / Ende | 11,0 | 0,2 | 2,9 | 0,0 | 0,0 | 0,5 |
| | 474 / Ende | -10,5 | 0,0 | 0,2 | 0,0 | 0,0 | 0,0 |
| CO11(30) | 97 / Anfang | 10,4 | 2,5 | -7,4 | 0,0 | 5,3 | -1,0 |
| | 97 / Ende | -4,3 | 2,4 | 2,1 | 0,0 | -5,4 | 1,2 |
| | 174 / Ende | -4,5 | -0,1 | 5,3 | 0,0 | 0,0 | -0,1 |
| | 474 / Ende | 11,1 | 0,0 | 0,1 | 0,0 | 0,0 | 0,0 |
| CO11(31) | 97 / Anfang | -3,9 | -0,3 | -12,5 | 0,0 | -3,2 | 0,7 |
| | 97 / Ende | 2,7 | -1,9 | -6,2 | 0,0 | 3,1 | -1,2 |
| | 174 / Ende | 0,0 | 0,2 | 18,6 | 0,0 | -0,1 | 0,5 |
| | 474 / Ende | -2,5 | 0,0 | 0,2 | 0,0 | 0,0 | 0,0 |
| CO11(32) | 97 / Anfang | -10,1 | 2,1 | 1,5 | 0,0 | -3,8 | -0,5 |
| | 97 / Ende | 4,8 | 1,1 | -2,1 | 0,0 | 3,8 | 0,2 |
| | 174 / Ende | 11,5 | 0,1 | 0,4 | 0,0 | 0,0 | 0,3 |
| | 474 / Ende | -9,8 | 0,0 | 0,1 | 0,0 | 0,0 | 0,0 |
| CO11(33) | 97 / Anfang | 5,4 | 1,4 | -13,5 | 0,0 | -0,2 | -0,2 |
| | 97 / Ende | -1,5 | 0,3 | -4,0 | 0,0 | 0,1 | 0,0 |
| | 174 / Ende | -4,2 | 0,1 | 17,5 | 0,0 | -0,1 | 0,2 |
| | 474 / Ende | 6,9 | 0,0 | 0,1 | 0,0 | 0,0 | 0,0 |
| CO11(34) | 97 / Anfang | -10,7 | 2,0 | 1,5 | 0,0 | -3,9 | -0,3 |
| | 97 / Ende | 5,1 | 0,5 | -2,1 | 0,0 | 3,9 | -0,2 |
| | 174 / Ende | 11,3 | 0,1 | 0,4 | 0,0 | 0,0 | 0,5 |
| | 474 / Ende | -10,3 | 0,0 | 0,1 | 0,0 | 0,0 | 0,0 |
| CO11(35) | 97 / Anfang | -1,0 | -0,2 | -12,8 | 0,0 | -2,8 | 0,6 |
| | 97 / Ende | 1,7 | -1,7 | -6,0 | 0,0 | 2,7 | -0,9 |
| | 174 / Ende | -2,9 | 0,2 | 18,6 | 0,0 | -0,1 | 0,4 |
| | 474 / Ende | 1,2 | 0,0 | 0,2 | 0,0 | 0,0 | 0,0 |
| CO11(36) | 97 / Anfang | 6,8 | 2,3 | -10,2 | 0,0 | 1,0 | -0,5 |
| | 97 / Ende | -3,1 | 1,3 | -2,2 | 0,0 | -1,1 | 0,3 |
| | 174 / Ende | -2,2 | 0,1 | 12,2 | 0,0 | -0,1 | 0,2 |
| | 474 / Ende | 6,7 | 0,0 | 0,1 | 0,0 | 0,0 | 0,0 |
| CO11(37) | 97 / Anfang | 5,8 | 1,5 | -13,5 | 0,0 | -0,2 | -0,4 |
| | 97 / Ende | -1,7 | 0,9 | -4,0 | 0,0 | 0,1 | 0,4 |
| | 174 / Ende | -3,8 | 0,0 | 17,5 | 0,0 | -0,1 | 0,0 |
| | 474 / Ende | 7,3 | 0,0 | 0,1 | 0,0 | 0,0 | 0,0 |
| CO11(38) | 97 / Anfang | -7,5 | 2,2 | 1,3 | 0,0 | -3,5 | -0,7 |
| | 97 / Ende | 4,0 | 1,3 | -1,9 | 0,0 | 3,5 | 0,4 |
| | 174 / Ende | 8,9 | 0,1 | 0,4 | 0,0 | 0,0 | 0,2 |
| | 474 / Ende | -6,4 | 0,0 | 0,1 | 0,0 | 0,0 | 0,0 |
| CO9(39) | 97 / Anfang | 10,5 | -0,5 | -1,2 | 0,0 | 1,9 | 0,8 |
| | 97 / Ende | -5,3 | -0,7 | 1,2 | 0,0 | -1,9 | -1,2 |
| | 174 / Ende | -8,2 | 0,1 | 0,0 | 0,0 | 0,0 | 0,4 |
| | 474 / Ende | 7,6 | 0,0 | 0,0 | 0,0 | 0,0 | 0,0 |
| CO11(40) | 97 / Anfang | -5,8 | 1,2 | -9,4 | 0,0 | -3,7 | 0,0 |
| | 97 / Ende | 4,0 | -0,4 | -5,2 | 0,0 | 3,6 | -0,4 |
| | 174 / Ende | 3,7 | 0,1 | 14,5 | 0,0 | -0,1 | 0,4 |
| | 474 / Ende | -3,4 | 0,0 | 0,2 | 0,0 | 0,0 | 0,0 |
| CO11(41) | 97 / Anfang | -8,7 | 1,1 | -9,2 | 0,0 | -4,0 | 0,1 |
| | 97 / Ende | 4,9 | -0,6 | -5,5 | 0,0 | 4,0 | -0,6 |
| | 174 / Ende | 6,5 | 0,2 | 14,4 | 0,0 | -0,1 | 0,5 |
| | 474 / Ende | -7,1 | 0,0 | 0,2 | 0,0 | 0,0 | 0,0 |

| Name | Bauteil | N [kN] | Vy [kN] | Vz [kN] | Mx [kNm] | My [kNm] | Mz [kNm] |
|---|---|---|---|---|---|---|---|
| CO11(42) | 97 / Anfang | 6,1 | 1,5 | -12,1 | 0,0 | 0,7 | -0,5 |
| | 97 / Ende | -2,0 | 1,2 | -2,9 | 0,0 | -0,7 | 0,6 |
| | 174 / Ende | -3,6 | 0,0 | 14,9 | 0,0 | -0,1 | 0,0 |
| | 474 / Ende | 7,4 | 0,0 | 0,1 | 0,0 | 0,0 | 0,0 |
| CO11(15) | 97 / Anfang | -3,9 | -0,4 | -8,9 | 0,0 | -3,3 | 0,8 |
| | 97 / Ende | 2,4 | -2,2 | -5,4 | 0,0 | 3,3 | -1,4 |
| | 174 / Ende | -0,2 | 0,2 | 14,1 | 0,0 | -0,1 | 0,5 |
| | 474 / Ende | -2,9 | 0,0 | 0,2 | 0,0 | 0,0 | 0,0 |
| CO11(18) | 97 / Anfang | 10,5 | 2,5 | -9,0 | 0,0 | 2,2 | -1,0 |
| | 97 / Ende | -4,4 | 2,5 | -0,8 | 0,0 | -2,3 | 1,2 |
| | 174 / Ende | -4,3 | -0,1 | 9,7 | 0,0 | -0,1 | -0,1 |
| | 474 / Ende | 11,0 | 0,0 | 0,1 | 0,0 | 0,0 | 0,0 |
| CO11(22) | 97 / Anfang | -8,4 | 0,9 | -2,0 | 0,0 | -4,2 | 0,3 |
| | 97 / Ende | 4,2 | -1,0 | -3,8 | 0,0 | 4,2 | -0,8 |
| | 174 / Ende | 6,5 | 0,2 | 5,6 | 0,0 | 0,0 | 0,6 |
| | 474 / Ende | -7,7 | 0,0 | 0,2 | 0,0 | 0,0 | 0,0 |
| CO11(24) | 97 / Anfang | -8,3 | 2,1 | -0,7 | 0,0 | -0,4 | -0,5 |
| | 97 / Ende | 4,8 | 0,8 | 0,1 | 0,0 | 0,4 | 0,1 |
| | 174 / Ende | 8,4 | 0,1 | 0,4 | 0,0 | 0,0 | 0,3 |
| | 474 / Ende | -6,5 | 0,0 | 0,1 | 0,0 | 0,0 | 0,0 |
| CO11(25) | 97 / Anfang | -0,5 | -0,1 | -12,8 | 0,0 | -2,8 | 0,4 |
| | 97 / Ende | 1,5 | -1,1 | -6,0 | 0,0 | 2,7 | -0,6 |
| | 174 / Ende | -2,6 | 0,1 | 18,6 | 0,0 | -0,1 | 0,2 |
| | 474 / Ende | 1,7 | 0,0 | 0,1 | 0,0 | 0,0 | 0,0 |
| CO11(26) | 97 / Anfang | 7,6 | 2,4 | -8,8 | 0,0 | 1,9 | -0,9 |
| | 97 / Ende | -3,5 | 2,2 | -1,0 | 0,0 | -1,9 | 0,9 |
| | 174 / Ende | -1,5 | 0,0 | 9,7 | 0,0 | -0,1 | 0,0 |
| | 474 / Ende | 7,3 | 0,0 | 0,1 | 0,0 | 0,0 | 0,0 |
| CO11(28) | 97 / Anfang | -11,5 | 2,0 | -3,4 | 0,0 | -4,7 | -0,2 |
| | 97 / Ende | 5,9 | 0,2 | -4,1 | 0,0 | 4,6 | -0,3 |
| | 174 / Ende | 10,9 | 0,2 | 7,3 | 0,0 | 0,0 | 0,5 |
| | 474 / Ende | -10,3 | 0,0 | 0,2 | 0,0 | 0,0 | 0,0 |
| CO11(1) | 97 / Anfang | 10,6 | 2,5 | -5,4 | 0,0 | 2,1 | -1,0 |
| | 97 / Ende | -4,7 | 2,4 | 0,0 | 0,0 | -2,1 | 1,2 |
| | 174 / Ende | -4,2 | -0,1 | 5,3 | 0,0 | 0,0 | -0,1 |
| | 474 / Ende | 10,8 | 0,0 | 0,1 | 0,0 | 0,0 | 0,0 |
| CO11(2) | 97 / Anfang | -11,5 | 2,0 | -1,8 | 0,0 | -1,6 | -0,2 |
| | 97 / Ende | 6,0 | 0,2 | -1,3 | 0,0 | 1,6 | -0,3 |
| | 174 / Ende | 10,8 | 0,2 | 2,9 | 0,0 | 0,0 | 0,5 |
| | 474 / Ende | -10,2 | 0,0 | 0,2 | 0,0 | 0,0 | 0,0 |
| CO11(6) | 97 / Anfang | -8,1 | 2,1 | 1,3 | 0,0 | -3,6 | -0,5 |
| | 97 / Ende | 4,3 | 0,7 | -1,9 | 0,0 | 3,6 | 0,1 |
| | 174 / Ende | 8,7 | 0,1 | 0,4 | 0,0 | 0,0 | 0,4 |
| | 474 / Ende | -6,9 | 0,0 | 0,1 | 0,0 | 0,0 | 0,0 |
| CO11(11) | 97 / Anfang | 6,0 | 1,5 | -9,0 | 0,0 | 6,8 | -0,5 |
| | 97 / Ende | -1,8 | 1,2 | 2,8 | 0,0 | -6,9 | 0,6 |
| | 174 / Ende | -3,9 | 0,0 | 6,1 | 0,0 | 0,0 | 0,0 |
| | 474 / Ende | 7,6 | 0,0 | 0,1 | 0,0 | 0,0 | 0,0 |
| CO11(12) | 97 / Anfang | -4,0 | -0,4 | -7,3 | 0,0 | -0,2 | 0,9 |
| | 97 / Ende | 2,5 | -2,2 | -2,6 | 0,0 | 0,2 | -1,4 |
| | 174 / Ende | -0,3 | 0,2 | 9,7 | 0,0 | 0,0 | 0,5 |
| | 474 / Ende | -2,8 | 0,0 | 0,2 | 0,0 | 0,0 | 0,0 |

### Fehlende Lasten

| Name | X [kN] | Y [kN] | Z [kN] | Mx [kNm] | My [kNm] | Mz [kNm] |
|---|---|---|---|---|---|---|
| CO11(29) | 0,0 | -0,1 | 0,0 | 0,1 | -0,2 | -0,4 |
| CO11(30) | 0,0 | -0,1 | 0,0 | -0,1 | 0,2 | 0,4 |
| CO11(31) | 0,0 | -0,3 | 0,0 | 0,1 | 0,0 | -0,1 |
| CO11(32) | 0,0 | 0,0 | 0,0 | 0,1 | -0,2 | -0,4 |
| CO11(33) | 0,0 | -0,2 | 0,0 | 0,0 | 0,2 | 0,3 |
| CO11(34) | 0,0 | 0,0 | 0,0 | 0,1 | -0,2 | -0,4 |
| CO11(35) | 0,0 | -0,3 | 0,0 | 0,1 | 0,1 | 0,0 |
| CO11(36) | 0,0 | -0,2 | 0,0 | 0,0 | 0,2 | 0,3 |
| CO11(37) | 0,0 | -0,2 | -0,1 | 0,0 | 0,2 | 0,3 |
| CO11(38) | 0,0 | 0,0 | 0,0 | 0,1 | -0,1 | -0,3 |
| CO9(39) | -0,6 | -1,2 | 0,0 | -0,1 | 0,1 | 0,3 |
| CO11(40) | 0,0 | -0,2 | 0,0 | 0,1 | 0,0 | -0,1 |
| CO11(41) | 0,0 | -0,2 | 0,0 | 0,1 | -0,1 | -0,3 |
| CO11(42) | 0,0 | -0,2 | 0,0 | 0,0 | 0,2 | 0,3 |
| CO11(15) | 0,0 | -0,2 | 0,0 | 0,1 | 0,0 | -0,1 |
| CO11(18) | 0,0 | -0,1 | 0,0 | -0,1 | 0,2 | 0,4 |
| CO11(22) | 0,0 | -0,1 | 0,0 | 0,1 | -0,1 | -0,3 |
| CO11(24) | 0,0 | 0,0 | 0,0 | 0,1 | -0,1 | -0,3 |
| CO11(25) | 0,0 | -0,3 | 0,0 | 0,1 | 0,1 | 0,1 |
| CO11(26) | 0,0 | -0,1 | 0,0 | 0,0 | 0,2 | 0,3 |
| CO11(28) | 0,0 | -0,1 | 0,0 | 0,1 | -0,2 | -0,4 |
| CO11(1) | 0,0 | -0,1 | 0,0 | -0,1 | 0,2 | 0,4 |
| CO11(2) | 0,0 | -0,1 | 0,0 | 0,1 | -0,2 | -0,4 |
| CO11(6) | 0,0 | 0,0 | 0,0 | 0,1 | -0,1 | -0,3 |
| CO11(11) | 0,0 | -0,1 | 0,0 | 0,0 | 0,2 | 0,3 |
| CO11(12) | 0,0 | -0,1 | 0,0 | 0,1 | 0,0 | -0,1 |

## Nachweis

### Übersicht

| Name | Wert | Nachweisstatus |
|---|---|---|
| Berechnung | 100,0% | OK |
| Platten | 0,0 < 5,0% | OK |
| Lokale Verformung | 0,0 < 3% | OK |
| Schrauben | 23,1 < 100% | OK |
| Schweißnähte | 43,2 < 100% | OK |
| Beulen | Nicht berechnet | |

### Platten

| Name | Material | $t_p$ [mm] | Lasten | $\sigma_{Ed}$ [MPa] | $\varepsilon_{Pl}$ [%] | $\sigma_{c,Ed}$ [MPa] | Status |
|---|---|---|---|---|---|---|---|
| 97-bfl 1 | S 355 | 8,5 | CO11(30) | 71,2 | 0,0 | 0,0 | OK |
| 97-tfl 1 | S 355 | 8,5 | CO11(32) | 66,8 | 0,0 | 0,0 | OK |
| 97-w 1 | S 355 | 5,6 | CO11(11) | 49,2 | 0,0 | 0,0 | OK |
| 174-bfl 1 | S 355 | 8,5 | CO11(31) | 61,6 | 0,0 | 0,0 | OK |
| 174-tfl 1 | S 355 | 8,5 | CO11(31) | 61,2 | 0,0 | 0,0 | OK |
| 174-w 1 | S 355 | 5,6 | CO11(31) | 81,8 | 0,0 | 0,0 | OK |
| 474 | Baustahl S 355 | 2,9 | CO11(18) | 169,6 | 0,0 | 0,0 | OK |
| Verschobene Stirnplatte1a | S 355 | 15,0 | CO11(41) | 59,1 | 0,0 | 30,9 | OK |
| Verschobene Stirnplatte1b | S 355 | 15,0 | CO11(31) | 60,0 | 0,0 | 24,1 | OK |
| STEIFF | S 355 | 10,0 | CO11(31) | 29,5 | 0,0 | 0,0 | OK |
| Verbindungsblech1a | S 355 | 10,0 | CO11(30) | 87,7 | 0,0 | 7,8 | OK |
| Verbindungsblech1b | S 355 | 10,0 | CO11(18) | 108,6 | 0,0 | 11,3 | OK |

**Bemessungsdaten**

| Material | $f_y$ [MPa] | $\varepsilon_{lim}$ [%] |
|---|---|---|
| S 355 | 355,0 | 5,0 |
| Baustahl S 355 | 355,0 | 5,0 |

**Erläuterung von Symbolen**

| | |
|---|---|
| $t_p$ | Plattendicke |
| $\sigma_{Ed}$ | Vergleichsspannung |
| $\varepsilon_{Pl}$ | Plastische Dehnung |
| $\sigma_{c,Ed}$ | Kontaktspannung |
| $f_y$ | Streckgrenze |
| $\varepsilon_{lim}$ | Grenzwert plastische Dehnung |

## Lokale Verformung

| Name | $d_0$ [mm] | Lasten | $\delta$ [mm] | $\delta_{lim}$ [mm] | $\delta/d_0$ [%] | Nachweisstatus |
|---|---|---|---|---|---|---|
| 474 | 76 | CO11(12) | 0 | 2 | 0,0 | OK |

**Erläuterung von Symbolen**

| | |
|---|---|
| $d_0$ | Querschnittsgröße |
| $\delta$ | Lokale Verformung im Querschnitt |
| $\delta_{lim}$ | Zulässige Verformung |

*Gesamt, CO11(30)*

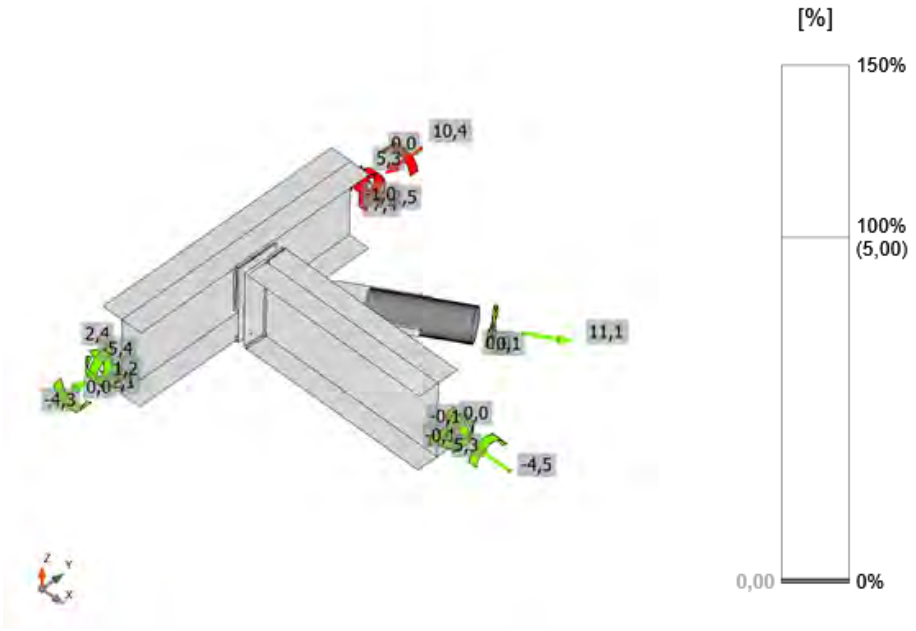


*Dehnung, CO11(30)*

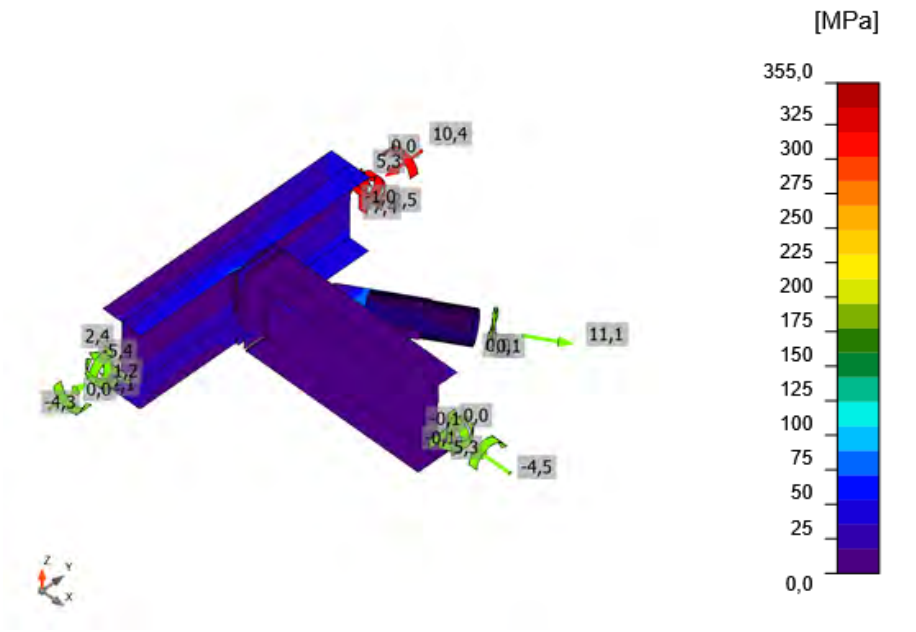


*Vergleichsspannung, CO11(30)*

## Schrauben

| Form | Position | Klasse | Lasten | $F_{t,Ed}$ [kN] | $F_{v,Ed}$ [kN] | $F_{b,Rd}$ [kN] | $Ut_t$ [%] | $Ut_s$ [%] | $Ut_{ts}$ [%] | Konstruktionsregeln | Status |
|---|---|---|---|---|---|---|---|---|---|---|---|
| 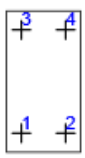 | B1 | M12 8.8 - 1 | CO11(37) | 4,9 | 4,2 | 116,5 | 10,0 | 13,0 | 20,1 | OK | OK |
| | B2 | M12 8.8 - 1 | CO11(31) | 5,9 | 4,7 | 116,5 | 12,1 | 14,5 | 23,1 | OK | OK |
| | B3 | M12 8.8 - 1 | CO11(31) | 0,0 | 4,6 | 116,5 | 0,0 | 14,2 | 14,2 | OK | OK |
| | B4 | M12 8.8 - 1 | CO11(31) | 3,7 | 4,8 | 116,5 | 7,6 | 14,8 | 20,2 | OK | OK |
| 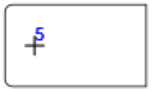 | B5 | M20 8.8 - 2 | CO11(18) | 5,0 | 11,0 | 96,0 | 3,5 | 11,7 | 14,2 | OK | OK |

**Bemessungsdaten**

| Klasse | $F_{t,Rd}$ [kN] | $B_{p,Rd}$ [kN] | $F_{v,Rd}$ [kN] |
|---|---|---|---|
| M12 8.8 - 1 | 48,6 | 210,8 | 32,4 |
| M20 8.8 - 2 | 141,1 | 234,7 | 94,1 |

**Erläuterung von Symbolen**

| | |
|---|---|
| $F_{t,Ed}$ | Zugkraft |
| $F_{v,Ed}$ | Resultierende der Schraubenscherkräfte Vy und Vz in Scherebenen |
| $F_{b,Rd}$ | Lochleibungstragfähigkeit der Platte nach EN 1993-1-8 Tab. 3.4 |
| $Ut_t$ | Ausnutzung unter Zug |
| $Ut_s$ | Ausnutzung unter Schub |
| $Ut_{ts}$ | Interaktion von Zug und Schub EN_1993-1-8 Tabelle 3.4 |
| $F_{t,Rd}$ | Zugtragfähigkeit der Schraube nach EN 1993-1-8 Tabelle 3.4 |
| $B_{p,Rd}$ | Durchstanztragfähigkeit nach EN 1993-1-8 Tabelle 3.4 |
| $F_{v,Rd}$ | Schertragfähigkeit der Schraube nach EN 1993-1-8 Tabelle 3.4 |

## Schweißnähte

| Position | Kante | $T_w$ [mm] | L [mm] | Lasten | $\sigma_{w,Ed}$ [MPa] | $\varepsilon_{Pl}$ [%] | $\sigma_{\perp}$ [MPa] | $\tau_{\perp}$ [MPa] | $\tau_{\parallel}$ [MPa] | Ut [%] | $Ut_c$ [%] | Konstruktionsregeln | Status |
|---|---|---|---|---|---|---|---|---|---|---|---|---|---|
| Verschobene Stirnplatte1a | 97-tfl 1 | ◢ 4,0 ◣ | 100 | CO11(12) | 82,8 | 0,0 | -36,6 | 33,7 | -26,4 | 19,0 | 10,4 | OK | OK |
| | | ◢ 4,0 ◣ | 100 | CO11(29) | 79,3 | 0,0 | 45,9 | -32,8 | 18,0 | 18,2 | 11,6 | OK | OK |
| Verschobene Stirnplatte1a | 97-bfl 1 | ◢ 4,0 ◣ | 100 | CO11(15) | 66,2 | 0,0 | -29,6 | -28,1 | -19,5 | 15,2 | 9,5 | OK | OK |
| | | ◢ 4,0 ◣ | 100 | CO11(30) | 85,1 | 0,0 | 20,6 | 26,4 | -39,7 | 19,5 | 11,4 | OK | OK |
| Verschobene Stirnplatte1b | 174-bfl 1 | ◢ 4,0 ◣ | 50 | CO11(31) | 52,8 | 0,0 | -32,2 | -21,9 | -10,1 | 12,1 | 10,0 | OK | OK |
| | | ◢ 4,0 ◣ | 49 | CO11(15) | 40,8 | 0,0 | 7,7 | 9,6 | -21,0 | 9,4 | 8,4 | OK | OK |
| Verschobene Stirnplatte1b | 174-tfl 1 | ◢ 4,0 ◣ | 50 | CO11(22) | 54,5 | 0,0 | -32,4 | 22,3 | -11,9 | 12,5 | 10,8 | OK | OK |
| | | ◢ 4,0 ◣ | 50 | CO11(22) | 42,4 | 0,0 | -20,8 | 17,3 | 12,5 | 9,7 | 8,8 | OK | OK |
| Verschobene Stirnplatte1b | 174-w 1 | ◢ 4,0 ◣ | 191 | CO11(31) | 188,1 | 0,0 | -115,1 | -83,6 | 19,5 | 43,2 | 27,7 | OK | OK |
| | | ◢ 4,0 ◣ | 191 | CO11(41) | 129,9 | 0,0 | 81,4 | -52,8 | -25,0 | 29,8 | 17,0 | OK | OK |
| 97-bfl 1 | STEIFF | ◢ 4,0 ◣ | 35 | CO11(31) | 23,0 | 0,0 | -1,5 | 0,0 | 13,2 | 5,3 | 5,3 | OK | OK |
| | | ◢ 4,0 ◣ | 35 | CO11(31) | 22,6 | 0,0 | 4,8 | -3,2 | -12,3 | 5,2 | 5,2 | OK | OK |
| 97-w 1 | STEIFF | ◢ 4,0 ◣ | 159 | CO11(37) | 30,4 | 0,0 | 0,9 | -0,3 | -17,5 | 7,0 | 7,0 | OK | OK |
| | | ◢ 4,0 ◣ | 159 | CO11(31) | 30,4 | 0,0 | 1,7 | -0,5 | 17,5 | 7,0 | 6,8 | OK | OK |
| 97-tfl 1 | STEIFF | ◢ 4,0 ◣ | 35 | CO11(29) | 13,3 | 0,0 | -5,9 | 2,0 | -6,6 | 3,1 | 3,1 | OK | OK |
| | | ◢ 4,0 ◣ | 35 | CO11(29) | 18,4 | 0,0 | 3,4 | 4,5 | 9,4 | 4,2 | 4,2 | OK | OK |
| Verschobene Stirnplatte1a | STEIFF | ◢ 4,0 ◣ | 181 | CO11(31) | 38,3 | 0,0 | -0,1 | -3,6 | -21,8 | 8,8 | 7,4 | OK | OK |
| | | ◢ 4,0 ◣ | 181 | CO11(41) | 33,1 | 0,0 | 2,9 | -7,5 | 17,5 | 7,6 | 6,7 | OK | OK |
| 174-w 1 | Verbindungsblech1a | ◢ 4,0 ◣ | 199 | CO11(28) | 39,1 | 0,0 | -6,7 | -6,7 | -21,2 | 9,0 | 7,6 | OK | OK |
| | | ◢ 4,0 ◣ | 199 | CO11(28) | 31,5 | 0,0 | -6,7 | 6,7 | 16,5 | 7,2 | 6,7 | OK | OK |
| Verschobene Stirnplatte1b | Verbindungsblech1a | ◢ 4,0 ◣ | 47 | CO11(33) | 81,8 | 0,0 | 41,7 | 27,9 | -29,5 | 18,8 | 12,3 | OK | OK |

| Position | Kante | $T_w$ [mm] | L [mm] | Lasten | $\sigma_{w,Ed}$ [MPa] | $\varepsilon_{Pl}$ [%] | $\sigma_{\perp}$ [MPa] | $\tau_{\perp}$ [MPa] | $\tau_{\parallel}$ [MPa] | Ut [%] | $Ut_c$ [%] | Konstruktionsregeln | Status |
|---|---|---|---|---|---|---|---|---|---|---|---|---|---|
| | | ◢ 4,0 ◣ | 47 | CO11(29) | 34,1 | 0,0 | 21,1 | -13,3 | -7,9 | 7,8 | 7,8 | OK | OK |
| Verbindungsblech1b | 474-arc 31 | ◢ 4,0 | 109 | CO11(18) | 96,8 | 0,0 | 40,9 | -19,5 | 46,7 | 22,2 | 12,5 | OK | OK |
| Verbindungsblech1b | 474-arc 63 | ◢ 4,0 | 109 | CO11(30) | 45,7 | 0,0 | -2,9 | 0,6 | 26,3 | 10,5 | 8,6 | OK | OK |
| Verbindungsblech1b | 474 | ◢ 4,0 | 219 | CO11(18) | 75,5 | 0,0 | -29,7 | 13,7 | 37,7 | 17,3 | 10,7 | OK | OK |

**Bemessungsdaten**

| Material | $f_u$ [MPa] | $\beta_w$ [-] | $\sigma_{w,Rd}$ [MPa] | 0.9 σ [MPa] |
|---|---|---|---|---|
| S 355 | 490,0 | 0,90 | 435,6 | 352,8 |

**Erläuterung von Symbolen**

| | |
|---|---|
| $T_w$ | Nahtdicke a |
| L | Länge |
| $\sigma_{w,Ed}$ | Vergleichsspannung |
| $\varepsilon_{Pl}$ | Dehnung |
| $\sigma_{\perp}$ | Senkrechte Spannung |
| $\tau_{\perp}$ | Scherspannung senkrecht zur Schweißnahtachse |
| $\tau_{\parallel}$ | Scherspannung parallel zur Schweißnahtachse |
| Ut | Ausnutzung |
| $Ut_c$ | Schätzung der Schweißnahtkapazität |
| ◢ | Kehlnaht |
| $f_u$ | Grenzfestigkeit der Schweißnaht |
| $\beta_w$ | Korrelationsfaktor nach EN 1993-1-8 Tab. 4.1 |
| $\sigma_{w,Rd}$ | Tragfähigkeit der Schweißnaht |
| 0.9 σ | Senkrechter Spannungswiderstand - 0.9*fu / γM2 |

## Beulen

**Die Beulanalyse wurde nicht berechnet.**

## Normeinstellungen

| Position | Wert | Einheit | Bezug |
|---|---|---|---|
| Sicherheitsfaktor $\gamma_{M0}$ | 1,00 | - | EN 1993-1-1 – 6.1 |
| Sicherheitsfaktor $\gamma_{M1}$ | 1,00 | - | EN 1993-1-1 – 6.1 |
| Sicherheitsfaktor $\gamma_{M2}$ | 1,25 | - | EN 1993-1-1 – 6.1 |
| Sicherheitsfaktor $\gamma_{M3}$ | 1,25 | - | EN 1993-1-8 – Table 2.1 |
| Sicherheitsfaktor $\gamma_{C}$ | 1,50 | - | EN 1992-1-1 – 2.4.2.4 |
| Sicherheitsfaktor $\gamma_{Inst}$ | 1,20 | - | EN 1992-4 – Table 4.1 |
| Verbindungskoeffizient βj | 0,67 | - | EN 1993-1-8 – 6.2.5(7) |
| Wirksame Fläche - Einfluss der Netzgröße | 0,10 | - | |
| Reibungsbeiwert - Beton | 0,25 | - | EN 1993-1-8 |
| Reibungskoeffizient bei gleitfesten Verbindungen | 0,30 | - | EN 1993-1-8 – Table 3.7 |
| Plastische Dehnung - Grenzwert | 0,05 | - | EN 1993-1-5 |
| Konstruktionsregeln | Ja | | |
| Distance between bolts [d0] | 2,20 | - | EN 1993-1-8 – Table 3.3 |
| Distance between bolts and edge [d0] | 1,20 | - | EN 1993-1-8 – Table 3.3 |
| Nachweis der Tragfähigkeit bei Betonausbruch | Beide | | |
| Berechnetes αb für Lochleibungsnachweis anwenden. | Ja | | EN 1993-1-8 – Table 3.4 |
| Gerissener Beton | Ja | | EN 1992-4 |
| Überprüfen der lokalen Verformung | Ja | | |
| Lokale Verformung - Grenzwert | 0,03 | - | CIDECT DG 1, 3 – 1.1 |
| Geometrische Nichtlinearität (GMNA) | Ja | | Analyse mit großen Verformungen für Verbindungen mit Hohlprofilen |
| Ausgesteiftes System | Nein | | EN 1993-1-8 – 5.2.2.5 |

## Projektdaten

| | |
|---|---|
| Projektname | IdeaStatiCa-Stadion_Fazanerija_JK-6_BR - 284 |
| Projektnummer | Detajl D12- O1 |
| Autor | mag. Igor Gorup dipl. ing. |
| Beschreibung | |
| Datum | 18.06.2025 |
| Norm | EN |

## Material

| | |
|---|---|
| Stahl | Baustahl S 355, S 355 |

# Projektposition 284

## Bemessung

| | |
|---|---|
| Name | 284 |
| Beschreibung | |
| Berechnung | Spannung, Dehnung/ Lasten im Gleichgewicht |

### Bauteile

#### Geometrie

| Name | Querschnitt | β – Rotation [°] | Y - Rotation [°] | α - Rotation [°] | Abstand ex [mm] | Abstand ey [mm] | Abstand ez [mm] |
|---|---|---|---|---|---|---|---|
| 107 | 25 - IPE180 | -90,0 | 0,0 | -180,0 | 0 | 0 | 0 |
| 123 | 12 - HEA200 | 0,0 | 90,0 | -90,0 | 0 | 0 | 0 |
| 124 | 25 - IPE180 | -90,0 | 0,0 | -180,0 | 0 | 0 | 0 |
| 140 | 24 - IPE240 | 0,0 | 0,0 | -180,0 | 0 | 0 | 30 |

#### Auflager und Kräfte

| Name | Auflager | Kräfte in | X [mm] |
|---|---|---|---|
| 107 / anfang | Mx-My-Mz | Schrauben | 165 |
| 123 / anfang | N-Vy-Vz-Mx-My-Mz | Position | 0 |
| 123 / ende | | Position | 0 |
| 124 / ende | | Position | 0 |
| 140 / ende | | Position | 0 |

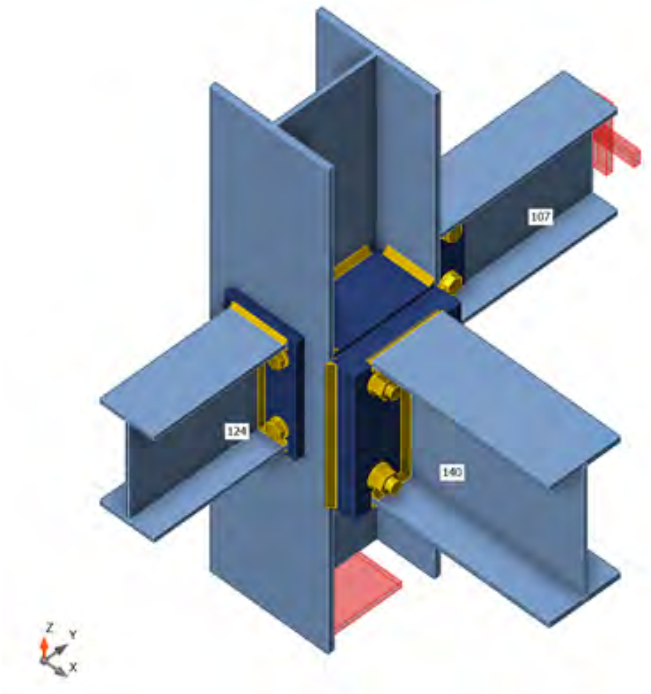


### Querschnitte

| Name | Material |
|---|---|
| 25 - IPE180 | S 355 |
| 12 - HEA200 | Baustahl S 355 |
| 24 - IPE240 | Baustahl S 355 |

## Schrauben

| Name | Durchmesser [mm] | $f_y$ [MPa] | $f_u$ [MPa] | Bruttofläche [$mm^2$] |
|---|---|---|---|---|
| M20 8.8 | 20 | 640,0 | 800,0 | 314 |
| M16 8.8 | 16 | 640,0 | 800,0 | 201 |

## Lasteinwirkungen (Kräfte im Gleichgewicht)

| Name | Bauteil | N [kN] | Vy [kN] | Vz [kN] | Mx [kNm] | My [kNm] | Mz [kNm] |
|---|---|---|---|---|---|---|---|
| CO9(32) | 107 / Anfang | 0,9 | 0,0 | 0,0 | 0,0 | 0,0 | 0,0 |
| | 123 / Anfang | -4,3 | -2,9 | -10,0 | 0,0 | -17,1 | 6,9 |
| | 123 / Ende | 1,3 | 1,3 | -4,5 | 0,0 | 17,1 | 5,0 |
| | 124 / Ende | -0,5 | 0,0 | 0,0 | 0,0 | 0,0 | 0,0 |
| | 140 / Ende | -0,1 | 0,0 | -3,0 | 0,0 | 11,9 | 0,0 |
| CO11(33) | 107 / Anfang | 1,5 | 3,4 | 26,1 | 0,0 | 0,0 | 0,0 |
| | 123 / Anfang | 104,9 | 5,6 | -5,9 | -0,2 | -8,5 | -24,2 |
| | 123 / Ende | -10,8 | -6,0 | 0,1 | -0,1 | -0,5 | -23,2 |
| | 124 / Ende | -2,0 | 1,6 | 18,2 | 0,0 | -9,0 | 0,1 |
| | 140 / Ende | 2,2 | -0,4 | 49,9 | 0,0 | -47,4 | -0,5 |
| CO11(34) | 107 / Anfang | 0,2 | 3,4 | 26,1 | 0,0 | 0,0 | 0,0 |
| | 123 / Anfang | 104,8 | 5,9 | 6,3 | 0,3 | 8,0 | -24,8 |
| | 123 / Ende | -10,7 | -5,9 | 4,4 | 0,0 | -17,0 | -23,0 |
| | 124 / Ende | 0,5 | 0,0 | 18,1 | 0,0 | -9,0 | -0,1 |
| | 140 / Ende | 1,6 | 0,4 | 49,9 | 0,0 | -47,8 | 0,3 |
| CO11(35) | 107 / Anfang | 1,4 | 3,4 | 26,1 | 0,0 | 0,0 | 0,0 |
| | 123 / Anfang | 103,7 | 4,7 | -7,8 | -0,3 | -11,8 | -21,5 |
| | 123 / Ende | -10,5 | -5,7 | -0,7 | -0,1 | 2,8 | -22,0 |
| | 124 / Ende | -2,1 | 1,6 | 18,2 | 0,0 | -9,0 | 0,1 |
| | 140 / Ende | 2,2 | -0,5 | 49,0 | 0,0 | -43,5 | -0,5 |
| CO11(36) | 107 / Anfang | 0,4 | 1,8 | 29,1 | 0,0 | 0,0 | 0,0 |
| | 123 / Anfang | 121,4 | 6,0 | 3,9 | 0,2 | 5,6 | -26,9 |
| | 123 / Ende | -16,6 | -6,4 | 4,0 | -0,1 | -15,5 | -25,3 |
| | 124 / Ende | 0,3 | -0,1 | 20,0 | 0,0 | -9,9 | -0,1 |
| | 140 / Ende | 1,5 | 0,2 | 55,7 | 0,0 | -52,1 | 0,2 |
| CO11(37) | 107 / Anfang | 1,2 | 1,9 | 26,1 | 0,0 | 0,0 | 0,0 |
| | 123 / Anfang | 103,2 | 4,5 | -5,4 | -0,2 | -6,3 | -21,2 |
| | 123 / Ende | -10,3 | -5,5 | 0,7 | -0,2 | -2,7 | -21,4 |
| | 124 / Ende | -1,3 | 0,9 | 18,2 | 0,0 | -9,0 | 0,0 |
| | 140 / Ende | 1,7 | -0,4 | 48,7 | 0,0 | -42,5 | -0,4 |
| CO11(38) | 107 / Anfang | 0,4 | -0,4 | 29,1 | 0,0 | 0,0 | 0,0 |
| | 123 / Anfang | 121,7 | 5,6 | 0,0 | 0,0 | -1,4 | -25,7 |
| | 123 / Ende | -17,3 | -6,3 | 2,2 | -0,1 | -8,5 | -24,8 |
| | 124 / Ende | 0,0 | -0,3 | 20,0 | 0,0 | -9,9 | -0,1 |
| | 140 / Ende | 1,0 | 0,1 | 55,4 | 0,0 | -50,5 | 0,0 |
| CO11(39) | 107 / Anfang | 0,4 | 1,8 | 29,1 | 0,0 | 0,0 | 0,0 |
| | 123 / Anfang | 116,2 | 6,1 | 3,9 | 0,2 | 6,1 | -26,9 |
| | 123 / Ende | -11,4 | -6,5 | 4,2 | -0,1 | -15,9 | -25,3 |
| | 124 / Ende | 0,3 | -0,1 | 20,0 | 0,0 | -9,9 | -0,1 |
| | 140 / Ende | 1,5 | 0,2 | 55,7 | 0,0 | -52,1 | 0,2 |
| CO11(40) | 107 / Anfang | 1,3 | 3,4 | 26,1 | 0,0 | 0,0 | 0,0 |
| | 123 / Anfang | 106,9 | 5,6 | -5,9 | -0,2 | -10,3 | -24,1 |
| | 123 / Ende | -12,8 | -6,0 | -0,3 | -0,1 | 1,3 | -23,2 |
| | 124 / Ende | -2,0 | 1,6 | 18,2 | 0,0 | -9,0 | 0,1 |
| | 140 / Ende | 2,2 | -0,3 | 49,9 | 0,0 | -47,3 | -0,4 |
| CO11(41) | 107 / Anfang | 0,5 | 1,9 | 26,1 | 0,0 | 0,0 | 0,0 |
| | 123 / Anfang | 102,0 | 4,7 | 2,2 | 0,1 | 5,2 | -21,7 |
| | 123 / Ende | -9,1 | -5,5 | 3,7 | -0,2 | -14,2 | -21,3 |

| Name | Bauteil | N [kN] | Vy [kN] | Vz [kN] | Mx [kNm] | My [kNm] | Mz [kNm] |
|---|---|---|---|---|---|---|---|
| | 124 / Ende | 0,2 | -0,1 | 18,2 | 0,0 | -9,0 | -0,1 |
| | 140 / Ende | 1,4 | 0,0 | 48,7 | 0,0 | -42,9 | 0,0 |
| CO11(42) | 107 / Anfang | 0,4 | -0,4 | 29,1 | 0,0 | 0,0 | 0,0 |
| | 123 / Anfang | 123,7 | 4,6 | -1,8 | -0,1 | -3,1 | -23,2 |
| | 123 / Ende | -20,2 | -6,0 | 1,8 | -0,1 | -6,8 | -23,5 |
| | 124 / Ende | -0,1 | -0,3 | 20,0 | 0,0 | -9,9 | -0,1 |
| | 140 / Ende | 1,0 | -0,1 | 54,4 | 0,0 | -46,7 | -0,1 |
| CO11(21) | 107 / Anfang | 1,3 | 3,6 | 14,0 | 0,0 | 0,0 | 0,0 |
| | 123 / Anfang | 59,4 | 3,6 | -5,4 | -0,1 | -8,7 | -13,8 |
| | 123 / Ende | -8,3 | -3,3 | -0,9 | 0,0 | 3,4 | -12,9 |
| | 124 / Ende | -2,0 | 1,8 | 10,3 | 0,0 | -5,2 | 0,2 |
| | 140 / Ende | 1,7 | -0,2 | 26,7 | 0,0 | -26,7 | -0,3 |
| CO11(22) | 107 / Anfang | 0,4 | -0,4 | 29,1 | 0,0 | 0,0 | 0,0 |
| | 123 / Anfang | 118,5 | 4,7 | -1,8 | -0,1 | -2,7 | -23,2 |
| | 123 / Ende | -15,0 | -6,0 | 1,9 | -0,1 | -7,2 | -23,5 |
| | 124 / Ende | -0,1 | -0,3 | 20,0 | 0,0 | -9,9 | -0,1 |
| | 140 / Ende | 1,0 | -0,1 | 54,4 | 0,0 | -46,7 | -0,1 |
| CO11(24) | 107 / Anfang | 1,4 | 3,5 | 18,9 | 0,0 | 0,0 | 0,0 |
| | 123 / Anfang | 78,1 | 3,5 | -7,5 | -0,2 | -10,7 | -15,4 |
| | 123 / Ende | -10,5 | -4,0 | -0,9 | -0,1 | 3,6 | -15,6 |
| | 124 / Ende | -2,0 | 1,7 | 13,9 | 0,0 | -7,0 | 0,1 |
| | 140 / Ende | 1,9 | -0,4 | 34,9 | 0,0 | -30,9 | -0,4 |
| CO11(26) | 107 / Anfang | 0,3 | 1,8 | 29,1 | 0,0 | 0,0 | 0,0 |
| | 123 / Anfang | 115,0 | 5,1 | 2,2 | 0,1 | 3,0 | -24,3 |
| | 123 / Ende | -11,1 | -6,2 | 3,4 | -0,1 | -12,9 | -24,2 |
| | 124 / Ende | 0,2 | -0,1 | 20,0 | 0,0 | -9,9 | -0,1 |
| | 140 / Ende | 1,5 | 0,1 | 54,8 | 0,0 | -48,5 | 0,1 |
| CO11(27) | 107 / Anfang | 0,3 | 3,4 | 26,1 | 0,0 | 0,0 | 0,0 |
| | 123 / Anfang | 101,7 | 5,0 | 4,7 | 0,2 | 7,0 | -22,4 |
| | 123 / Ende | -8,5 | -5,7 | 4,2 | -0,1 | -16,0 | -21,8 |
| | 124 / Ende | 0,4 | 0,0 | 18,1 | 0,0 | -9,0 | -0,1 |
| | 140 / Ende | 1,6 | 0,2 | 49,0 | 0,0 | -44,3 | 0,2 |
| CO11(28) | 107 / Anfang | 0,7 | 2,1 | 18,9 | 0,0 | 0,0 | 0,0 |
| | 123 / Anfang | 77,7 | 4,5 | 4,2 | 0,1 | 9,1 | -18,1 |
| | 123 / Ende | -9,2 | -4,2 | 4,2 | -0,1 | -16,2 | -16,1 |
| | 124 / Ende | 0,2 | 0,0 | 13,9 | 0,0 | -7,0 | -0,1 |
| | 140 / Ende | 1,1 | 0,1 | 35,6 | 0,0 | -34,2 | 0,1 |
| CO11(30) | 107 / Anfang | 0,3 | 3,4 | 26,1 | 0,0 | 0,0 | 0,0 |
| | 123 / Anfang | 106,9 | 4,9 | 4,7 | 0,2 | 6,6 | -22,4 |
| | 123 / Ende | -13,7 | -5,6 | 4,1 | -0,1 | -15,6 | -21,8 |
| | 124 / Ende | 0,4 | 0,0 | 18,1 | 0,0 | -9,0 | -0,1 |
| | 140 / Ende | 1,6 | 0,2 | 49,1 | 0,0 | -44,3 | 0,2 |
| CO11(31) | 107 / Anfang | 0,3 | 3,5 | 18,9 | 0,0 | 0,0 | 0,0 |
| | 123 / Anfang | 76,2 | 3,8 | 4,8 | 0,1 | 7,7 | -16,2 |
| | 123 / Ende | -8,4 | -4,0 | 3,8 | -0,1 | -14,7 | -15,5 |
| | 124 / Ende | 0,4 | 0,1 | 13,9 | 0,0 | -7,0 | -0,1 |
| | 140 / Ende | 1,3 | 0,2 | 35,0 | 0,0 | -31,7 | 0,1 |
| CO11(10) | 107 / Anfang | 0,5 | -0,4 | 29,1 | 0,0 | 0,0 | 0,0 |
| | 123 / Anfang | 124,9 | 5,6 | 0,0 | 0,0 | 0,0 | -25,8 |
| | 123 / Ende | -20,4 | -6,3 | 2,6 | -0,1 | -9,9 | -24,7 |

| Name | Bauteil | N [kN] | Vy [kN] | Vz [kN] | Mx [kNm] | My [kNm] | Mz [kNm] |
|---|---|---|---|---|---|---|---|
| | 124 / Ende | 0,0 | -0,3 | 20,0 | 0,0 | -9,9 | -0,1 |
| | 140 / Ende | 1,0 | 0,0 | 55,4 | 0,0 | -50,5 | 0,0 |
| CO11(13) | 107 / Anfang | 0,4 | 3,6 | 14,0 | 0,0 | 0,0 | 0,0 |
| | 123 / Anfang | 55,3 | 4,0 | 6,6 | 0,1 | 10,9 | -14,6 |
| | 123 / Ende | -4,2 | -3,3 | 4,2 | 0,0 | -16,1 | -12,6 |
| | 124 / Ende | 0,4 | 0,1 | 10,3 | 0,0 | -5,2 | 0,0 |
| | 140 / Ende | 1,1 | 0,2 | 26,8 | 0,0 | -27,2 | 0,2 |
| CO11(14) | 107 / Anfang | 0,4 | -0,1 | 14,0 | 0,0 | 0,0 | 0,0 |
| | 123 / Anfang | 63,3 | 3,2 | 0,4 | 0,0 | 0,2 | -12,9 |
| | 123 / Ende | -12,7 | -3,0 | 1,4 | 0,0 | -5,5 | -11,7 |
| | 124 / Ende | 0,0 | -0,1 | 10,3 | 0,0 | -5,2 | 0,0 |
| | 140 / Ende | 0,3 | 0,0 | 26,2 | 0,0 | -24,6 | 0,0 |
| CO11(15) | 107 / Anfang | 0,2 | 3,5 | 21,2 | 0,0 | 0,0 | 0,0 |
| | 123 / Anfang | 82,9 | 5,2 | 6,3 | 0,2 | 8,2 | -20,8 |
| | 123 / Ende | -6,3 | -5,0 | 4,0 | 0,0 | -15,4 | -19,1 |
| | 124 / Ende | 0,5 | 0,1 | 14,5 | 0,0 | -7,2 | -0,1 |
| | 140 / Ende | 1,3 | 0,3 | 40,9 | 0,0 | -39,9 | 0,3 |
| CO11(1) | 107 / Anfang | 1,5 | 3,6 | 18,9 | 0,0 | 0,0 | 0,0 |
| | 123 / Anfang | 79,3 | 4,5 | -5,6 | -0,2 | -7,5 | -18,0 |
| | 123 / Ende | -10,7 | -4,3 | -0,1 | -0,1 | 0,4 | -16,8 |
| | 124 / Ende | -2,0 | 1,7 | 13,9 | 0,0 | -7,0 | 0,1 |
| | 140 / Ende | 1,9 | -0,3 | 35,8 | 0,0 | -34,8 | -0,4 |
| CO11(2) | 107 / Anfang | 1,4 | 3,6 | 14,0 | 0,0 | 0,0 | 0,0 |
| | 123 / Anfang | 57,4 | 3,7 | -5,4 | -0,1 | -6,8 | -14,0 |
| | 123 / Ende | -6,3 | -3,3 | -0,4 | -0,1 | 1,6 | -12,9 |
| | 124 / Ende | -2,0 | 1,8 | 10,3 | 0,0 | -5,2 | 0,2 |
| | 140 / Ende | 1,7 | -0,3 | 26,8 | 0,0 | -26,8 | -0,3 |
| CO11(4) | 107 / Anfang | 1,0 | 1,8 | 29,1 | 0,0 | 0,0 | 0,0 |
| | 123 / Anfang | 116,2 | 4,9 | -5,4 | -0,2 | -8,4 | -23,8 |
| | 123 / Ende | -12,3 | -6,2 | 0,4 | -0,1 | -1,5 | -24,2 |
| | 124 / Ende | -1,3 | 0,8 | 20,0 | 0,0 | -9,9 | 0,0 |
| | 140 / Ende | 1,8 | -0,3 | 54,8 | 0,0 | -48,0 | -0,4 |
| CO11(5) | 107 / Anfang | 1,1 | 1,9 | 29,1 | 0,0 | 0,0 | 0,0 |
| | 123 / Anfang | 122,6 | 5,8 | -3,6 | -0,2 | -5,6 | -26,4 |
| | 123 / Ende | -17,8 | -6,5 | 1,1 | -0,1 | -4,3 | -25,4 |
| | 124 / Ende | -1,2 | 0,9 | 20,0 | 0,0 | -9,9 | 0,0 |
| | 140 / Ende | 1,8 | -0,2 | 55,7 | 0,0 | -51,8 | -0,3 |
| CO11(7) | 107 / Anfang | 1,4 | 3,4 | 26,1 | 0,0 | 0,0 | 0,0 |
| | 123 / Anfang | 110,1 | 5,6 | -5,9 | -0,2 | -9,0 | -24,2 |
| | 123 / Ende | -16,0 | -5,9 | 0,0 | -0,1 | -0,1 | -23,2 |
| | 124 / Ende | -2,0 | 1,6 | 18,2 | 0,0 | -9,0 | 0,1 |
| | 140 / Ende | 2,2 | -0,4 | 49,9 | 0,0 | -47,4 | -0,4 |

### Fehlende Lasten

| Name | X [kN] | Y [kN] | Z [kN] | Mx [kNm] | My [kNm] | Mz [kNm] |
|---|---|---|---|---|---|---|
| CO9(32) | -1,6 | -14,8 | 0,0 | 0,0 | 0,0 | 0,0 |
| CO11(33) | -3,2 | -4,8 | -0,1 | -4,3 | -0,1 | 0,6 |
| CO11(34) | -1,9 | 9,7 | 0,0 | -4,3 | 0,0 | 0,6 |
| CO11(35) | -3,9 | -7,3 | -0,1 | -4,3 | -0,1 | 0,6 |
| CO11(36) | -0,7 | 7,0 | 0,0 | -4,8 | 0,0 | 0,3 |
| CO11(37) | -2,1 | -4,2 | 0,0 | -4,3 | 0,0 | 0,3 |
| CO11(38) | 0,9 | 1,8 | 0,0 | -4,8 | 0,0 | -0,1 |
| CO11(39) | -0,6 | 7,2 | 0,0 | -4,8 | 0,0 | 0,3 |
| CO11(40) | -3,3 | -5,2 | 0,0 | -4,3 | -0,1 | 0,6 |
| CO11(41) | -1,2 | 5,2 | 0,0 | -4,3 | 0,0 | 0,3 |
| CO11(42) | 0,3 | -0,3 | 0,0 | -4,8 | 0,0 | -0,1 |
| CO11(21) | -3,5 | -5,4 | 0,0 | -2,3 | 0,0 | 0,6 |
| CO11(22) | 0,4 | -0,2 | 0,0 | -4,8 | 0,0 | -0,1 |
| CO11(24) | -3,9 | -7,4 | -0,1 | -3,1 | -0,1 | 0,6 |
| CO11(26) | -1,3 | 4,8 | 0,0 | -4,8 | 0,0 | 0,3 |
| CO11(27) | -2,4 | 8,0 | 0,0 | -4,3 | 0,0 | 0,6 |
| CO11(28) | -0,6 | 7,5 | 0,0 | -3,1 | 0,0 | 0,3 |
| CO11(30) | -2,4 | 7,8 | 0,0 | -4,3 | 0,0 | 0,6 |
| CO11(31) | -2,5 | 7,8 | 0,0 | -3,1 | 0,0 | 0,6 |
| CO11(10) | 1,0 | 2,1 | 0,0 | -4,8 | 0,0 | -0,1 |
| CO11(13) | -1,9 | 9,9 | 0,0 | -2,3 | 0,0 | 0,6 |
| CO11(14) | 0,7 | 1,4 | 0,0 | -2,3 | 0,0 | 0,0 |
| CO11(15) | -2,0 | 9,4 | 0,0 | -3,5 | 0,0 | 0,6 |
| CO11(1) | -3,2 | -4,9 | 0,0 | -3,1 | -0,1 | 0,6 |
| CO11(2) | -3,3 | -5,0 | 0,0 | -2,3 | 0,0 | 0,6 |
| CO11(4) | -2,1 | -4,4 | 0,0 | -4,8 | 0,0 | 0,3 |
| CO11(5) | -1,5 | -2,1 | 0,0 | -4,8 | 0,0 | 0,3 |
| CO11(7) | -3,2 | -4,9 | -0,1 | -4,3 | -0,1 | 0,6 |

## Nachweis

### Übersicht

| Name | Wert | Nachweisstatus |
|---|---|---|
| Berechnung | 100,0% | OK |
| Platten | 0,5 < 5,0% | OK |
| Schrauben | 84,1 < 100% | OK |
| Schweißnähte | 98,7 < 100% | OK |
| Beulen | Nicht berechnet | |

## Platten

| Name | Material | $t_p$ [mm] | Lasten | $\sigma_{Ed}$ [MPa] | $\varepsilon_{Pl}$ [%] | $\sigma_{c,Ed}$ [MPa] | Status |
|---|---|---|---|---|---|---|---|
| 107-bfl 1 | S 355 | 8,0 | CO11(34) | 83,9 | 0,0 | 0,0 | OK |
| 107-tfl 1 | S 355 | 8,0 | CO11(27) | 75,3 | 0,0 | 0,0 | OK |
| 107-w 1 | S 355 | 5,3 | CO11(40) | 191,7 | 0,0 | 18,4 | OK |
| 123-bfl 1 | Baustahl S 355 | 10,0 | CO11(36) | 355,9 | 0,4 | 24,2 | OK |
| 123-tfl 1 | Baustahl S 355 | 10,0 | CO11(39) | 356,1 | 0,5 | 0,0 | OK |
| 123-w 1 | Baustahl S 355 | 6,5 | CO11(4) | 121,4 | 0,0 | 0,0 | OK |
| 124-bfl 1 | S 355 | 8,0 | CO11(26) | 124,4 | 0,0 | 0,0 | OK |
| 124-tfl 1 | S 355 | 8,0 | CO11(5) | 137,0 | 0,0 | 0,0 | OK |
| 124-w 1 | S 355 | 5,3 | CO11(39) | 102,1 | 0,0 | 0,0 | OK |
| 140-bfl 1 | Baustahl S 355 | 9,8 | CO11(36) | 317,3 | 0,1 | 0,0 | OK |
| 140-tfl 1 | Baustahl S 355 | 9,8 | CO11(5) | 320,4 | 0,2 | 0,0 | OK |
| 140-w 1 | Baustahl S 355 | 6,2 | CO11(36) | 250,7 | 0,0 | 0,0 | OK |
| Verschobene Stirnplatte1a | S 355 | 20,0 | CO11(39) | 356,0 | 0,5 | 136,7 | OK |
| Verschobene Stirnplatte1b | S 355 | 20,0 | CO11(5) | 355,1 | 0,1 | 132,8 | OK |
| STEIFF | S 355 | 10,0 | CO11(39) | 290,2 | 0,0 | 0,0 | OK |
| Stirnblech1 | S 355 | 15,0 | CO11(39) | 177,3 | 0,0 | 47,3 | OK |
| Fahnenblech1 | S 355 | 10,0 | CO11(40) | 254,2 | 0,0 | 19,7 | OK |
| Rippe1a | S 355 | 10,0 | CO11(5) | 194,8 | 0,0 | 0,0 | OK |
| Rippe1b | S 355 | 10,0 | CO11(22) | 110,4 | 0,0 | 0,0 | OK |
| Rippe1c | S 355 | 10,0 | CO11(5) | 111,9 | 0,0 | 0,0 | OK |
| Rippe1d | S 355 | 10,0 | CO11(36) | 54,3 | 0,0 | 0,0 | OK |

**Bemessungsdaten**

| Material | $f_y$ [MPa] | $\varepsilon_{lim}$ [%] |
|---|---|---|
| S 355 | 355,0 | 5,0 |
| Baustahl S 355 | 355,0 | 5,0 |

**Erläuterung von Symbolen**

| | |
|---|---|
| $t_p$ | Plattendicke |
| $\sigma_{Ed}$ | Vergleichsspannung |
| $\varepsilon_{Pl}$ | Plastische Dehnung |
| $\sigma_{c,Ed}$ | Kontaktspannung |
| $f_y$ | Streckgrenze |
| $\varepsilon_{lim}$ | Grenzwert plastische Dehnung |

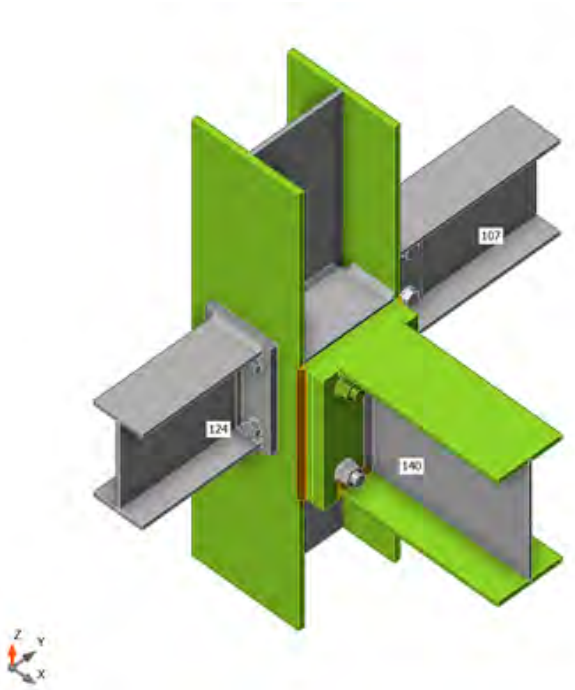


*Gesamt, CO11(39)*

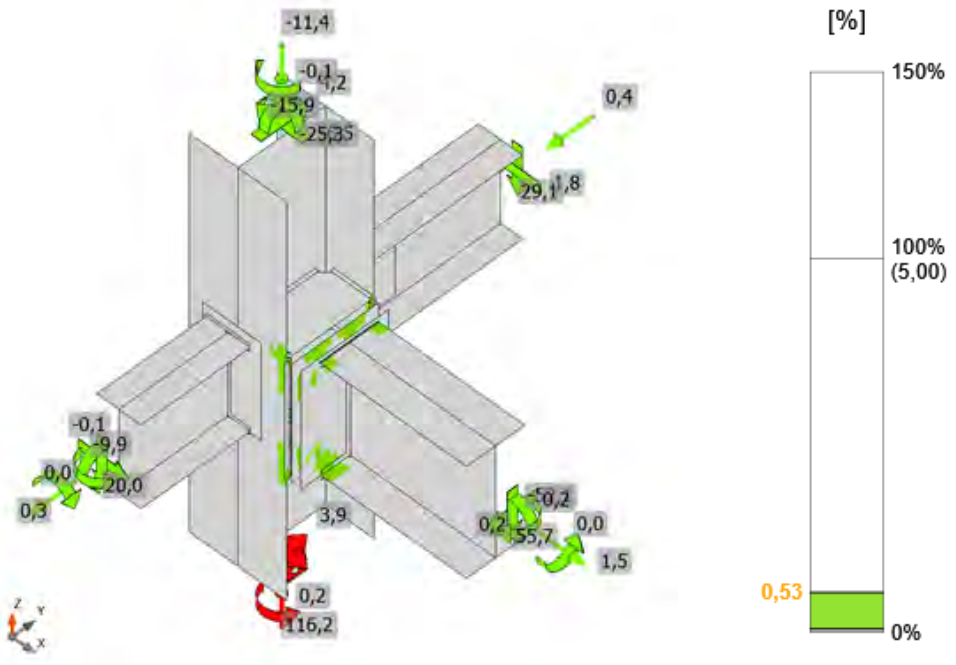


*Dehnung, CO11(39)*

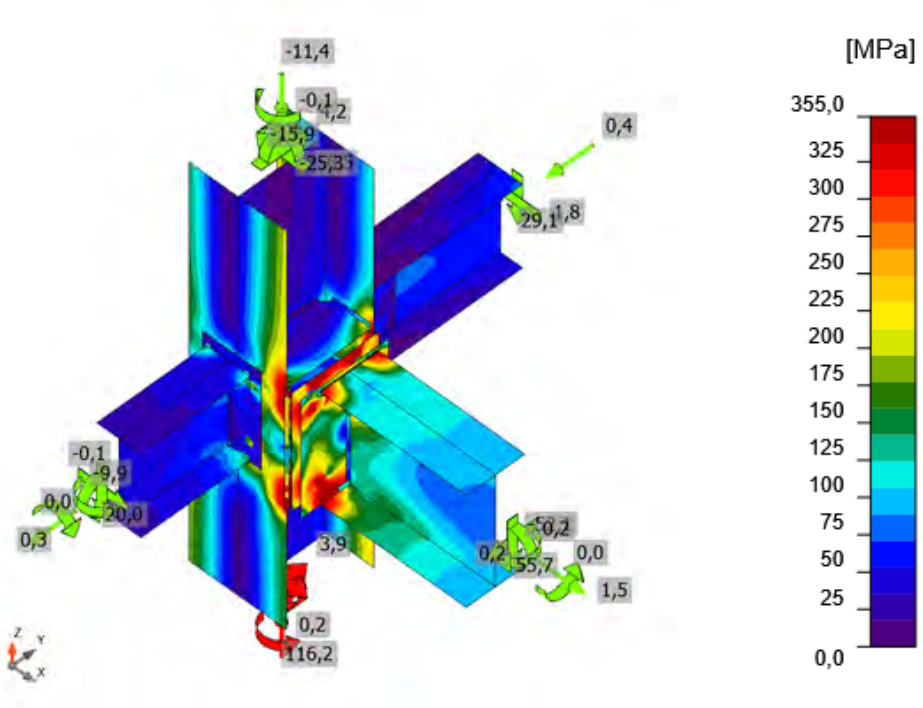


*Vergleichsspannung, CO11(39)*

## Schrauben

| Form | Position | Klasse | Lasten | $F_{t,Ed}$ [kN] | $F_{v,Ed}$ [kN] | $F_{b,Rd}$ [kN] | $Ut_t$ [%] | $Ut_s$ [%] | $Ut_{ts}$ [%] | Konstruktionsregeln | Status |
|---|---|---|---|---|---|---|---|---|---|---|---|
| 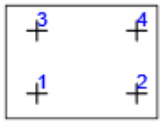 | B1 | M20 8.8 - 1 | CO11(39) | 1,9 | 20,6 | 267,6 | 1,4 | 21,9 | 22,9 | OK | OK |
| | B2 | M20 8.8 - 1 | CO11(39) | 117,8 | 13,6 | 198,2 | 83,5 | 14,4 | 74,1 | OK | OK |
| | B3 | M20 8.8 - 1 | CO11(39) | 2,9 | 20,9 | 270,0 | 2,1 | 22,2 | 23,7 | OK | OK |
| | B4 | M20 8.8 - 1 | CO11(39) | 118,7 | 13,1 | 199,3 | 84,1 | 13,9 | 74,0 | OK | OK |
| 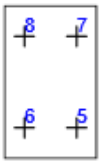 | B5 | M16 8.8 - 2 | CO11(5) | 0,8 | 6,7 | 156,8 | 0,9 | 11,1 | 11,7 | OK | OK |
| | B6 | M16 8.8 - 2 | CO11(4) | 0,7 | 4,4 | 156,8 | 0,7 | 7,2 | 7,8 | OK | OK |
| | B7 | M16 8.8 - 2 | CO11(39) | 27,5 | 6,4 | 156,8 | 30,4 | 10,6 | 32,3 | OK | OK |
| | B8 | M16 8.8 - 2 | CO11(26) | 29,8 | 3,8 | 156,8 | 33,0 | 6,3 | 29,8 | OK | OK |
| 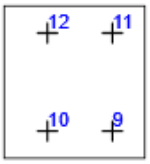 | B9 | M16 8.8 - 3 | CO11(4) | 2,0 | 13,4 | 63,6 | 2,2 | 22,3 | 23,8 | OK | OK |
| | B10 | M16 8.8 - 3 | CO11(35) | 2,4 | 7,9 | 83,1 | 2,6 | 13,1 | 15,0 | OK | OK |
| | B11 | M16 8.8 - 3 | CO11(4) | 3,0 | 13,0 | 63,1 | 3,4 | 21,6 | 24,0 | OK | OK |
| | B12 | M16 8.8 - 3 | CO11(35) | 7,2 | 6,9 | 46,2 | 8,0 | 15,0 | 17,2 | OK | OK |

**Bemessungsdaten**

| Klasse | $F_{t,Rd}$ [kN] | $B_{p,Rd}$ [kN] | $F_{v,Rd}$ [kN] |
|---|---|---|---|
| M20 8.8 - 1 | 141,1 | 469,4 | 94,1 |
| M16 8.8 - 2 | 90,4 | 187,5 | 60,3 |
| M16 8.8 - 3 | 90,4 | 99,4 | 60,3 |

**Erläuterung von Symbolen**

| | |
|---|---|
| $F_{t,Ed}$ | Zugkraft |
| $F_{v,Ed}$ | Resultierende der Schraubenscherkräfte Vy und Vz in Scherebenen |
| $F_{b,Rd}$ | Lochleibungstragfähigkeit der Platte nach EN 1993-1-8 Tab. 3.4 |
| $Ut_t$ | Ausnutzung unter Zug |
| $Ut_s$ | Ausnutzung unter Schub |
| $Ut_{ts}$ | Interaktion von Zug und Schub EN_1993-1-8 Tabelle 3.4 |
| $F_{t,Rd}$ | Zugtragfähigkeit der Schraube nach EN 1993-1-8 Tabelle 3.4 |
| $B_{p,Rd}$ | Durchstanztragfähigkeit nach EN 1993-1-8 Tabelle 3.4 |
| $F_{v,Rd}$ | Schertragfähigkeit der Schraube nach EN 1993-1-8 Tabelle 3.4 |

## Schweißnähte

| Position | Kante | $T_w$ [mm] | L [mm] | Lasten | $\sigma_{w,Ed}$ [MPa] | $\varepsilon_{Pl}$ [%] | $\sigma_{\perp}$ [MPa] | $\tau_{\perp}$ [MPa] | $\tau_{\parallel}$ [MPa] | Ut [%] | $Ut_c$ [%] | Konstruktionsregeln | Status |
|---|---|---|---|---|---|---|---|---|---|---|---|---|---|
| Verschobene Stirnplatte1a | 123-tfl 1 | ◢ 6,0 ◣ | 241 | CO11(39) | 428,9 | 1,2 | -198,8 | 199,8 | -90,7 | 98,5 | 84,9 | OK | OK |
| | | ◢ 6,0 ◣ | 242 | CO11(39) | 429,3 | 1,4 | -248,5 | 201,9 | -9,8 | 98,6 | 86,2 | OK | OK |
| Verschobene Stirnplatte1a | 123-bfl 1 | ◢ 6,0 ◣ | 242 | CO11(36) | 429,1 | 1,3 | -255,0 | 197,2 | -28,8 | 98,5 | 88,1 | OK | OK |
| | | ◢ 6,0 ◣ | 241 | CO11(36) | 428,5 | 1,0 | -200,8 | 205,8 | -73,6 | 98,4 | 79,4 | OK | OK |
| Verschobene Stirnplatte1b | 140-bfl 1 | ◢ 6,0 ◣ | 120 | CO11(36) | 362,5 | 0,0 | 94,0 | 85,2 | -183,3 | 83,2 | 55,9 | OK | OK |
| | | ◢ 6,0 ◣ | 120 | CO11(36) | 402,6 | 0,0 | 250,0 | 123,9 | 133,6 | 92,4 | 61,4 | OK | OK |
| Verschobene Stirnplatte1b | 140-tfl 1 | ◢ 6,0 ◣ | 119 | CO11(36) | 429,8 | 1,7 | -170,4 | -156,4 | -165,6 | 98,7 | 89,0 | OK | OK |
| | | ◢ 6,0 ◣ | 119 | CO11(36) | 429,4 | 1,5 | -148,6 | 164,2 | 164,7 | 98,6 | 89,7 | OK | OK |
| Verschobene Stirnplatte1b | 140-w 1 | ◢ 6,0 ◣ | 226 | CO11(5) | 202,0 | 0,0 | 89,8 | -89,9 | 53,3 | 46,4 | 33,9 | OK | OK |
| | | ◢ 6,0 ◣ | 226 | CO11(5) | 203,5 | 0,0 | 94,2 | 97,8 | 36,0 | 46,7 | 33,5 | OK | OK |
| 123-bfl 1 | STEIFF | ◢ 6,0 ◣ | 78 | CO11(39) | 88,8 | 0,0 | -57,5 | -23,6 | 31,2 | 20,4 | 15,6 | OK | OK |
| | | ◢ 6,0 ◣ | 79 | CO11(39) | 112,8 | 0,0 | 44,8 | 44,7 | -39,7 | 25,9 | 15,8 | OK | OK |
| 123-w 1 | STEIFF | ◢ 6,0 ◣ | 134 | CO11(36) | 37,5 | 0,0 | -9,8 | -2,0 | -20,8 | 8,6 | 8,3 | OK | OK |
| | | ◢ 6,0 ◣ | 134 | CO11(36) | 61,2 | 0,0 | 18,7 | -10,8 | 31,9 | 14,0 | 11,6 | OK | OK |
| 123-tfl 1 | STEIFF | ◢ 6,0 ◣ | 78 | CO11(36) | 90,4 | 0,0 | -2,2 | -21,9 | -47,3 | 20,7 | 17,1 | OK | OK |
| | | ◢ 6,0 ◣ | 79 | CO11(5) | 112,8 | 0,0 | 46,9 | 45,3 | 38,2 | 25,9 | 18,0 | OK | OK |
| Verschobene Stirnplatte1a | STEIFF | ◢ 6,0 ◣ | 169 | CO11(39) | 261,6 | 0,0 | 86,3 | 38,6 | 137,3 | 60,1 | 44,8 | OK | OK |
| | | ◢ 6,0 ◣ | 169 | CO11(36) | 177,9 | 0,0 | -33,0 | -14,6 | 99,9 | 40,9 | 28,5 | OK | OK |
| Stirnblech1 | 124-bfl 1 | ◢ 4,0 ◣ | 91 | CO11(26) | 181,5 | 0,0 | 83,6 | 58,7 | 72,2 | 41,7 | 28,4 | OK | OK |

| Position | Kante | $T_w$ [mm] | L [mm] | Lasten | $\sigma_{w,Ed}$ [MPa] | $\varepsilon_{Pl}$ [%] | $\sigma_{\perp}$ [MPa] | $\tau_{\perp}$ [MPa] | $\tau_{\parallel}$ [MPa] | Ut [%] | $Ut_c$ [%] | Konstruktionsregeln | Status |
|---|---|---|---|---|---|---|---|---|---|---|---|---|---|
| | | ◢ 4,0 ◣ | 91 | CO11(38) | 123,4 | 0,0 | 34,0 | -58,1 | 36,2 | 28,3 | 21,9 | OK | OK |
| Stirnblech1 | 124-tfl 1 | ◢ 4,0 ◣ | 91 | CO11(39) | 195,0 | 0,0 | -88,1 | -65,0 | 76,6 | 44,8 | 31,4 | OK | OK |
| | | ◢ 4,0 ◣ | 91 | CO11(39) | 133,6 | 0,0 | -39,1 | 62,3 | -39,6 | 30,7 | 23,2 | OK | OK |
| Stirnblech1 | 124-w 1 | ◢ 4,0 ◣ | 170 | CO11(39) | 106,4 | 0,0 | 49,6 | 51,7 | 16,6 | 24,4 | 15,3 | OK | OK |
| | | ◢ 4,0 ◣ | 170 | CO11(39) | 108,3 | 0,0 | 52,5 | -50,2 | -21,7 | 24,9 | 16,4 | OK | OK |
| 123-tfl 1 | Fahnenblech1 | ◢ 6,0 ◣ | 139 | CO11(10) | 232,7 | 0,0 | -121,3 | -96,6 | 61,7 | 53,4 | 32,2 | OK | OK |
| | | ◢ 6,0 ◣ | 139 | CO11(36) | 221,3 | 0,0 | -75,2 | 93,5 | -75,5 | 50,8 | 29,6 | OK | OK |
| 123-bfl 1 | Rippe1a | ◢ 6,0 ◣ | 79 | CO11(10) | 126,7 | 0,0 | -51,5 | -57,5 | -34,1 | 29,1 | 20,7 | OK | OK |
| | | ◢ 6,0 ◣ | 78 | CO11(39) | 154,5 | 0,0 | -95,9 | 43,8 | -54,5 | 35,5 | 24,0 | OK | OK |
| 123-w 1 | Rippe1a | ◢ 6,0 ◣ | 134 | CO11(5) | 42,3 | 0,0 | 13,0 | 11,7 | 20,1 | 9,7 | 7,7 | OK | OK |
| | | ◢ 6,0 ◣ | 134 | CO11(36) | 40,2 | 0,0 | 20,2 | -18,3 | -8,2 | 9,2 | 7,5 | OK | OK |
| 123-tfl 1 | Rippe1a | ◢ 6,0 ◣ | 79 | CO11(5) | 130,8 | 0,0 | -56,4 | -59,6 | 32,9 | 30,0 | 21,7 | OK | OK |
| | | ◢ 6,0 ◣ | 78 | CO11(5) | 148,2 | 0,0 | -75,8 | 72,6 | -11,3 | 34,0 | 26,9 | OK | OK |
| 123-bfl 1 | Rippe1b | ◢ 6,0 ◣ | 78 | CO11(42) | 91,2 | 0,0 | 51,7 | 42,6 | -8,2 | 20,9 | 13,6 | OK | OK |
| | | ◢ 6,0 ◣ | 78 | CO11(39) | 35,0 | 0,0 | 1,0 | -20,1 | 1,5 | 8,0 | 7,6 | OK | OK |
| 123-w 1 | Rippe1b | ◢ 6,0 ◣ | 134 | CO11(36) | 52,9 | 0,0 | 14,5 | 17,0 | 24,0 | 12,1 | 8,9 | OK | OK |
| | | ◢ 6,0 ◣ | 134 | CO11(36) | 56,3 | 0,0 | 19,0 | -16,5 | -25,8 | 12,9 | 8,9 | OK | OK |
| 123-tfl 1 | Rippe1b | ◢ 6,0 ◣ | 78 | CO11(36) | 52,8 | 0,0 | 12,9 | 10,6 | -27,6 | 12,1 | 8,3 | OK | OK |
| | | ◢ 6,0 ◣ | 78 | CO11(36) | 51,3 | 0,0 | 4,9 | -7,3 | 28,6 | 11,8 | 7,7 | OK | OK |
| 123-bfl 1 | Rippe1c | ◢ 6,0 ◣ | 78 | CO11(39) | 105,4 | 0,0 | 39,4 | 54,9 | -13,3 | 24,2 | 16,9 | OK | OK |

| Position | Kante | $T_w$ [mm] | L [mm] | Lasten | $\sigma_{w,Ed}$ [MPa] | $\varepsilon_{Pl}$ [%] | $\sigma_{\perp}$ [MPa] | $\tau_{\perp}$ [MPa] | $\tau_{\parallel}$ [MPa] | Ut [%] | $Ut_c$ [%] | Konstruktionsregeln | Status |
|---|---|---|---|---|---|---|---|---|---|---|---|---|---|
| | | ◢ 6,0 ◣ | 78 | CO11(36) | 112,4 | 0,0 | 59,8 | -44,3 | 32,6 | 25,8 | 16,9 | OK | OK |
| 123-w 1 | Rippe1c | ◢ 6,0 ◣ | 134 | CO11(35) | 27,0 | 0,0 | -3,7 | -8,7 | -12,8 | 6,2 | 6,2 | OK | OK |
| | | ◢ 6,0 ◣ | 134 | CO11(35) | 34,4 | 0,0 | -9,4 | 4,4 | 18,6 | 7,9 | 7,1 | OK | OK |
| 123-tfl 1 | Rippe1c | ◢ 6,0 ◣ | 78 | CO11(5) | 106,5 | 0,0 | 41,2 | 52,2 | 22,2 | 24,4 | 15,6 | OK | OK |
| | | ◢ 6,0 ◣ | 78 | CO11(5) | 112,6 | 0,0 | 60,1 | -49,1 | -24,8 | 25,9 | 17,6 | OK | OK |
| 123-bfl 1 | Rippe1d | ◢ 6,0 ◣ | 78 | CO11(39) | 77,9 | 0,0 | -32,9 | -40,7 | -0,9 | 17,9 | 12,0 | OK | OK |
| | | ◢ 6,0 ◣ | 78 | CO11(39) | 65,4 | 0,0 | -35,0 | 27,2 | 16,7 | 15,0 | 10,1 | OK | OK |
| 123-w 1 | Rippe1d | ◢ 6,0 ◣ | 134 | CO11(5) | 43,1 | 0,0 | -12,1 | -11,9 | -20,7 | 9,9 | 7,9 | OK | OK |
| | | ◢ 6,0 ◣ | 134 | CO11(5) | 55,2 | 0,0 | 3,4 | -3,2 | 31,6 | 12,7 | 9,7 | OK | OK |
| 123-tfl 1 | Rippe1d | ◢ 6,0 ◣ | 78 | CO11(5) | 36,0 | 0,0 | 0,3 | -11,6 | 17,3 | 8,3 | 6,6 | OK | OK |
| | | ◢ 6,0 ◣ | 78 | CO11(5) | 58,1 | 0,0 | -21,6 | 9,7 | -29,6 | 13,3 | 7,7 | OK | OK |

**Bemessungsdaten**

| Material | $f_u$ [MPa] | $\beta_w$ [-] | $\sigma_{w,Rd}$ [MPa] | 0.9 σ [MPa] |
|---|---|---|---|---|
| S 355 | 490,0 | 0,90 | 435,6 | 352,8 |

**Erläuterung von Symbolen**

| | |
|---|---|
| $T_w$ | Nahtdicke a |
| L | Länge |
| $\sigma_{w,Ed}$ | Vergleichsspannung |
| $\varepsilon_{Pl}$ | Dehnung |
| $\sigma_{\perp}$ | Senkrechte Spannung |
| $\tau_{\perp}$ | Scherspannung senkrecht zur Schweißnahtachse |
| $\tau_{\parallel}$ | Scherspannung parallel zur Schweißnahtachse |
| Ut | Ausnutzung |
| $Ut_c$ | Schätzung der Schweißnahtkapazität |
| ◢ | Kehlnaht |
| $f_u$ | Grenzfestigkeit der Schweißnaht |
| $\beta_w$ | Korrelationsfaktor nach EN 1993-1-8 Tab. 4.1 |
| $\sigma_{w,Rd}$ | Tragfähigkeit der Schweißnaht |
| 0.9 σ | Senkrechter Spannungswiderstand - 0.9*fu / γM2 |

## Beulen

**Die Beulanalyse wurde nicht berechnet.**

## Normeinstellungen

| Position | Wert | Einheit | Bezug |
|---|---|---|---|
| Sicherheitsfaktor $\gamma_{M0}$ | 1,00 | - | EN 1993-1-1 – 6.1 |
| Sicherheitsfaktor $\gamma_{M1}$ | 1,00 | - | EN 1993-1-1 – 6.1 |
| Sicherheitsfaktor $\gamma_{M2}$ | 1,25 | - | EN 1993-1-1 – 6.1 |
| Sicherheitsfaktor $\gamma_{M3}$ | 1,25 | - | EN 1993-1-8 – Table 2.1 |
| Sicherheitsfaktor $\gamma_{C}$ | 1,50 | - | EN 1992-1-1 – 2.4.2.4 |
| Sicherheitsfaktor $\gamma_{Inst}$ | 1,20 | - | EN 1992-4 – Table 4.1 |
| Verbindungskoeffizient βj | 0,67 | - | EN 1993-1-8 – 6.2.5(7) |
| Wirksame Fläche - Einfluss der Netzgröße | 0,10 | - | |
| Reibungsbeiwert - Beton | 0,25 | - | EN 1993-1-8 |
| Reibungskoeffizient bei gleitfesten Verbindungen | 0,30 | - | EN 1993-1-8 – Table 3.7 |
| Plastische Dehnung - Grenzwert | 0,05 | - | EN 1993-1-5 |
| Konstruktionsregeln | Ja | | |
| Distance between bolts [d0] | 2,20 | - | EN 1993-1-8 – Table 3.3 |
| Distance between bolts and edge [d0] | 1,20 | - | EN 1993-1-8 – Table 3.3 |
| Nachweis der Tragfähigkeit bei Betonausbruch | Beide | | |
| Berechnetes αb für Lochleibungsnachweis anwenden. | Ja | | EN 1993-1-8 – Table 3.4 |
| Gerissener Beton | Ja | | EN 1992-4 |
| Überprüfen der lokalen Verformung | Ja | | |
| Lokale Verformung - Grenzwert | 0,03 | - | CIDECT DG 1, 3 – 1.1 |
| Geometrische Nichtlinearität (GMNA) | Ja | | Analyse mit großen Verformungen für Verbindungen mit Hohlprofilen |
| Ausgesteiftes System | Nein | | EN 1993-1-8 – 5.2.2.5 |

## Projektdaten

| | |
|---|---|
| Projektname | IdeaStatiCa-Stadion_Fazanerija_JK-6_BR - 274 |
| Projektnummer | Detajl D13-O1 |
| Autor | mag. Igor Gorup dipl. ing. |
| Beschreibung | |
| Datum | 18.06.2025 |
| Norm | EN |

## Material

| | |
|---|---|
| Stahl | Baustahl S 355, S 355 |

# Projektposition 274

## Bemessung

| | |
|---|---|
| Name | 274 |
| Beschreibung | |
| Berechnung | Spannung, Dehnung/ Lasten im Gleichgewicht |

### Bauteile

**Geometrie**

| Name | Querschnitt | β – Rotation [°] | Y - Rotation [°] | α - Rotation [°] | Abstand ex [mm] | Abstand ey [mm] | Abstand ez [mm] |
|---|---|---|---|---|---|---|---|
| 107 | 273 - IPE180 | -90,0 | 0,0 | -180,0 | 0 | 0 | 0 |
| 62 | 266 - HEB260 | -146,3 | 90,0 | 56,3 | 0 | 0 | 0 |
| 141 | 272 - IPE300 | 0,0 | 0,0 | -180,0 | 0 | 0 | 60 |
| 460 | 273 - IPE180 | -90,0 | 0,0 | -180,0 | 0 | 0 | 0 |

**Auflager und Kräfte**

| Name | Auflager | Kräfte in | X [mm] |
|---|---|---|---|
| 107 / ende | | Position | 0 |
| 62 / anfang | N-Vy-Vz-Mx-My-Mz | Position | 0 |
| 62 / ende | | Position | 0 |
| 141 / ende | | Position | 0 |
| 460 / anfang | | Position | 0 |

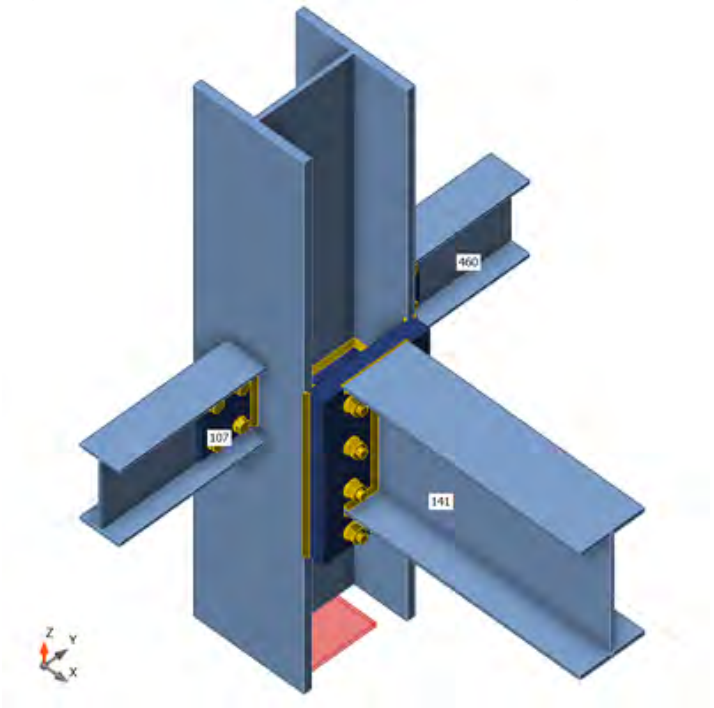


### Querschnitte

| Name | Material |
|---|---|
| 273 - IPE180 | S 355 |
| 266 - HEB260 | Baustahl S 355 |
| 272 - IPE300 | Baustahl S 355 |

## Schrauben

| Name | Durchmesser [mm] | $f_y$ [MPa] | $f_u$ [MPa] | Bruttofläche [$mm^2$] |
|---|---|---|---|---|
| M20 8.8 | 20 | 640,0 | 800,0 | 314 |
| M16 8.8 | 16 | 640,0 | 800,0 | 201 |

## Lasteinwirkungen (Kräfte im Gleichgewicht)

| Name | Bauteil | N [kN] | Vy [kN] | Vz [kN] | Mx [kNm] | My [kNm] | Mz [kNm] |
|---|---|---|---|---|---|---|---|
| CO11(30) | 107 / Ende | -1,3 | 3,6 | 26,1 | 0,0 | 0,0 | 0,0 |
| | 62 / Anfang | -357,8 | 11,5 | -24,4 | -0,5 | -22,8 | -38,7 |
| | 62 / Ende | 481,6 | -21,8 | 9,1 | -0,3 | 22,8 | -45,6 |
| | 141 / Ende | 18,8 | -2,6 | 77,5 | 0,0 | -84,3 | -0,7 |
| | 460 / Anfang | 5,9 | 5,9 | 20,5 | 0,0 | 0,0 | 0,0 |
| CO11(31) | 107 / Ende | -0,2 | 3,6 | 14,0 | 0,0 | 0,0 | 0,0 |
| | 62 / Anfang | 215,0 | 8,6 | 24,2 | 0,3 | 29,6 | -29,0 |
| | 62 / Ende | -143,5 | -15,1 | -13,9 | 0,2 | -29,5 | -33,1 |
| | 141 / Ende | 8,2 | 2,3 | 46,2 | 0,0 | -62,1 | 0,4 |
| | 460 / Anfang | -0,4 | 5,9 | 11,3 | 0,0 | 0,0 | 0,0 |
| CO11(32) | 107 / Ende | -1,4 | 3,7 | 14,0 | 0,0 | 0,0 | 0,0 |
| | 62 / Anfang | -319,8 | 10,0 | -17,7 | -0,2 | -15,4 | -28,7 |
| | 62 / Ende | 391,0 | -18,2 | 6,3 | -0,2 | 15,3 | -32,9 |
| | 141 / Ende | 14,9 | -2,3 | 45,9 | 0,0 | -61,6 | -0,4 |
| | 460 / Anfang | 4,3 | 6,0 | 11,3 | 0,0 | 0,0 | 0,0 |
| CO11(33) | 107 / Ende | -0,4 | -0,2 | 29,1 | 0,0 | 0,0 | 0,0 |
| | 62 / Anfang | -175,8 | 9,9 | -3,4 | -0,1 | 2,8 | -38,5 |
| | 62 / Ende | 313,1 | -22,9 | -0,6 | -0,1 | -2,8 | -51,4 |
| | 141 / Ende | 10,8 | -0,2 | 85,6 | 0,0 | -89,9 | -0,2 |
| | 460 / Anfang | 2,7 | -0,2 | 22,7 | 0,0 | 0,0 | 0,0 |
| CO11(34) | 107 / Ende | -1,0 | 2,0 | 29,1 | 0,0 | 0,0 | 0,0 |
| | 62 / Anfang | -276,0 | 11,6 | -16,0 | -0,3 | -12,7 | -41,4 |
| | 62 / Ende | 414,0 | -23,8 | 5,1 | -0,2 | 12,7 | -51,5 |
| | 141 / Ende | 16,1 | -1,7 | 86,3 | 0,0 | -92,9 | -0,6 |
| | 460 / Anfang | 4,7 | 3,4 | 22,7 | 0,0 | 0,0 | 0,0 |
| CO11(35) | 107 / Ende | -0,3 | 2,1 | 29,1 | 0,0 | 0,0 | 0,0 |
| | 62 / Anfang | 165,7 | 13,5 | 16,5 | 0,3 | 21,7 | -49,8 |
| | 62 / Ende | -22,4 | -27,2 | -10,7 | 0,2 | -21,7 | -62,0 |
| | 141 / Ende | 11,5 | 1,6 | 91,5 | 0,0 | -111,8 | 0,5 |
| | 460 / Anfang | 0,9 | 3,4 | 22,7 | 0,0 | 0,0 | 0,0 |
| CO9(36) | 107 / Ende | -0,9 | 0,0 | 0,0 | 0,0 | 0,0 | 0,0 |
| | 62 / Anfang | -89,6 | -11,7 | -33,5 | 0,0 | -45,0 | 26,7 |
| | 62 / Ende | 79,4 | 9,4 | 18,1 | 0,0 | 45,0 | 12,4 |
| | 141 / Ende | 6,6 | 0,0 | -10,2 | 0,0 | 39,1 | 0,0 |
| | 460 / Anfang | 5,3 | 0,0 | 0,0 | 0,0 | 0,0 | 0,0 |
| CO11(37) | 107 / Ende | -0,2 | 3,6 | 26,0 | 0,0 | 0,0 | 0,0 |
| | 62 / Anfang | 242,8 | 12,7 | 25,0 | 0,5 | 31,3 | -47,1 |
| | 62 / Ende | -113,4 | -24,7 | -15,0 | 0,3 | -31,3 | -56,6 |
| | 141 / Ende | 11,9 | 2,6 | 82,8 | -0,1 | -103,7 | 0,7 |
| | 460 / Anfang | 0,2 | 5,8 | 20,4 | 0,0 | 0,0 | 0,0 |
| CO11(38) | 107 / Ende | -0,3 | -0,1 | 24,2 | 0,0 | 0,0 | 0,0 |
| | 62 / Anfang | 34,8 | 11,1 | 3,1 | 0,0 | 6,0 | -39,7 |
| | 62 / Ende | 83,7 | -23,2 | -3,4 | 0,0 | -6,0 | -51,6 |
| | 141 / Ende | 7,8 | 0,0 | 75,6 | 0,0 | -91,3 | 0,0 |
| | 460 / Anfang | 1,3 | -0,1 | 18,7 | 0,0 | 0,0 | 0,0 |
| CO11(39) | 107 / Ende | -1,4 | 3,7 | 14,0 | 0,0 | 0,0 | 0,0 |
| | 62 / Anfang | -360,8 | 10,1 | -17,6 | -0,2 | -14,4 | -28,8 |
| | 62 / Ende | 432,0 | -18,3 | 6,1 | -0,2 | 14,4 | -32,8 |

| Name | Bauteil | N [kN] | Vy [kN] | Vz [kN] | Mx [kNm] | My [kNm] | Mz [kNm] |
|---|---|---|---|---|---|---|---|
| | 141 / Ende | 14,9 | -2,3 | 45,9 | 0,0 | -61,6 | -0,4 |
| | 460 / Anfang | 4,3 | 6,0 | 11,3 | 0,0 | 0,0 | 0,0 |
| CO11(40) | 107 / Ende | -0,4 | -0,2 | 29,1 | 0,0 | 0,0 | 0,0 |
| | 62 / Anfang | -134,6 | 9,7 | -3,3 | -0,1 | 2,0 | -38,4 |
| | 62 / Ende | 272,0 | -22,9 | -0,5 | -0,1 | -1,9 | -51,7 |
| | 141 / Ende | 10,8 | -0,2 | 85,7 | 0,0 | -90,1 | -0,2 |
| | 460 / Anfang | 2,6 | -0,2 | 22,7 | 0,0 | 0,0 | 0,0 |
| CO11(19) | 107 / Ende | -1,3 | 3,6 | 26,1 | 0,0 | 0,0 | 0,0 |
| | 62 / Anfang | -316,5 | 11,3 | -24,4 | -0,5 | -23,7 | -38,6 |
| | 62 / Ende | 440,4 | -21,8 | 9,3 | -0,3 | 23,7 | -45,9 |
| | 141 / Ende | 18,8 | -2,6 | 77,6 | 0,0 | -84,5 | -0,7 |
| | 460 / Anfang | 5,8 | 5,9 | 20,5 | 0,0 | 0,0 | 0,0 |
| CO11(22) | 107 / Ende | -0,4 | 2,1 | 29,1 | 0,0 | 0,0 | 0,0 |
| | 62 / Anfang | 26,6 | 14,3 | 16,2 | 0,3 | 25,0 | -49,8 |
| | 62 / Ende | 116,8 | -29,0 | -11,0 | 0,1 | -24,9 | -62,5 |
| | 141 / Ende | 12,5 | 1,5 | 91,6 | 0,0 | -112,3 | 0,4 |
| | 460 / Anfang | 1,2 | 3,4 | 22,7 | 0,0 | 0,0 | 0,0 |
| CO11(24) | 107 / Ende | -0,3 | 3,5 | 26,0 | 0,0 | 0,0 | 0,0 |
| | 62 / Anfang | 84,6 | 9,8 | 19,0 | 0,4 | 27,0 | -39,0 |
| | 62 / Ende | 40,3 | -20,4 | -12,0 | 0,1 | -26,9 | -47,8 |
| | 141 / Ende | 13,1 | 2,4 | 78,3 | -0,1 | -86,8 | 0,4 |
| | 460 / Anfang | 1,2 | 5,8 | 20,5 | 0,0 | 0,0 | 0,0 |
| CO11(25) | 107 / Ende | -1,3 | 3,6 | 26,1 | 0,0 | 0,0 | 0,0 |
| | 62 / Anfang | -154,4 | 14,7 | -17,7 | -0,4 | -18,7 | -47,1 |
| | 62 / Ende | 283,2 | -26,8 | 5,8 | -0,2 | 18,6 | -55,5 |
| | 141 / Ende | 17,8 | -2,5 | 82,4 | 0,1 | -102,6 | -0,6 |
| | 460 / Anfang | 4,9 | 5,9 | 20,5 | 0,0 | 0,0 | 0,0 |
| CO11(26) | 107 / Ende | -1,3 | 3,7 | 14,0 | 0,0 | 0,0 | 0,0 |
| | 62 / Anfang | -179,8 | 9,5 | -17,3 | -0,2 | -18,5 | -28,6 |
| | 62 / Ende | 250,8 | -16,6 | 6,4 | -0,2 | 18,5 | -32,2 |
| | 141 / Ende | 14,0 | -2,3 | 45,8 | 0,1 | -60,8 | -0,4 |
| | 460 / Anfang | 4,1 | 6,0 | 11,3 | 0,0 | 0,0 | 0,0 |
| CO11(27) | 107 / Ende | -0,3 | 3,6 | 14,0 | 0,0 | 0,0 | 0,0 |
| | 62 / Anfang | 16,3 | 5,5 | 18,2 | 0,2 | 26,3 | -21,2 |
| | 62 / Ende | 50,7 | -10,6 | -11,3 | 0,0 | -26,2 | -24,2 |
| | 141 / Ende | 9,3 | 2,2 | 41,8 | 0,0 | -45,4 | 0,2 |
| | 460 / Anfang | 0,5 | 5,9 | 11,3 | 0,0 | 0,0 | 0,0 |
| CO11(28) | 107 / Ende | -0,5 | 2,1 | 26,0 | 0,0 | 0,0 | 0,0 |
| | 62 / Anfang | -231,4 | 10,2 | 9,6 | 0,2 | 21,9 | -36,8 |
| | 62 / Ende | 355,2 | -21,8 | -7,7 | -0,1 | -21,8 | -46,5 |
| | 141 / Ende | 12,7 | 1,3 | 77,3 | -0,1 | -83,3 | 0,1 |
| | 460 / Anfang | 2,2 | 3,4 | 20,5 | 0,0 | 0,0 | 0,0 |
| CO11(29) | 107 / Ende | -0,3 | -0,2 | 29,1 | 0,0 | 0,0 | 0,0 |
| | 62 / Anfang | 6,1 | 9,2 | -2,7 | 0,0 | -0,9 | -38,7 |
| | 62 / Ende | 131,5 | -21,4 | -0,3 | -0,1 | 0,9 | -51,6 |
| | 141 / Ende | 9,9 | -0,1 | 85,8 | 0,0 | -90,3 | -0,1 |
| | 460 / Anfang | 2,4 | -0,2 | 22,7 | 0,0 | 0,0 | 0,0 |
| CO11(10) | 107 / Ende | -0,2 | 3,6 | 21,1 | 0,0 | 0,0 | 0,0 |
| | 62 / Anfang | 250,7 | 11,0 | 24,7 | 0,4 | 30,0 | -39,9 |
| | 62 / Ende | -145,1 | -20,4 | -14,4 | 0,2 | -30,0 | -47,1 |

| Name | Bauteil | N [kN] | Vy [kN] | Vz [kN] | Mx [kNm] | My [kNm] | Mz [kNm] |
|---|---|---|---|---|---|---|---|
| | 141 / Ende | 10,1 | 2,5 | 68,0 | 0,0 | -87,0 | 0,6 |
| | 460 / Anfang | -0,1 | 5,8 | 16,5 | 0,0 | 0,0 | 0,0 |
| CO11(11) | 107 / Ende | -1,2 | 2,1 | 18,9 | 0,0 | 0,0 | 0,0 |
| | 62 / Anfang | -508,1 | 7,7 | -16,4 | -0,2 | -8,1 | -25,6 |
| | 62 / Ende | 597,3 | -16,7 | 5,8 | -0,2 | 8,1 | -31,5 |
| | 141 / Ende | 14,2 | -1,6 | 55,1 | 0,0 | -57,1 | -0,4 |
| | 460 / Anfang | 4,6 | 3,5 | 15,3 | 0,0 | 0,0 | 0,0 |
| CO11(13) | 107 / Ende | -1,1 | 2,1 | 29,1 | 0,0 | 0,0 | 0,0 |
| | 62 / Anfang | -254,2 | 15,8 | -9,8 | -0,2 | -4,6 | -50,1 |
| | 62 / Ende | 397,3 | -30,5 | 1,6 | -0,2 | 4,5 | -61,7 |
| | 141 / Ende | 15,9 | -1,6 | 91,3 | 0,1 | -111,9 | -0,5 |
| | 460 / Anfang | 4,0 | 3,5 | 22,7 | 0,0 | 0,0 | 0,0 |
| CO11(14) | 107 / Ende | -0,4 | 3,6 | 26,0 | 0,0 | 0,0 | 0,0 |
| | 62 / Anfang | 63,2 | 13,7 | 24,7 | 0,4 | 35,5 | -47,2 |
| | 62 / Ende | 66,2 | -26,5 | -15,6 | 0,2 | -35,4 | -56,9 |
| | 141 / Ende | 12,9 | 2,5 | 82,9 | -0,1 | -104,1 | 0,6 |
| | 460 / Anfang | 0,5 | 5,8 | 20,4 | 0,0 | 0,0 | 0,0 |
| CO11(1) | 107 / Ende | -1,5 | 3,7 | 18,9 | 0,0 | 0,0 | 0,0 |
| | 62 / Anfang | -370,3 | 12,4 | -17,9 | -0,3 | -14,0 | -36,3 |
| | 62 / Ende | 465,2 | -22,9 | 5,9 | -0,3 | 13,9 | -42,2 |
| | 141 / Ende | 16,7 | -2,4 | 60,8 | 0,1 | -78,5 | -0,5 |
| | 460 / Anfang | 4,8 | 6,0 | 15,3 | 0,0 | 0,0 | 0,0 |
| CO11(5) | 107 / Ende | -1,1 | 2,1 | 29,1 | 0,0 | 0,0 | 0,0 |
| | 62 / Anfang | -213,2 | 15,5 | -9,8 | -0,2 | -5,5 | -50,0 |
| | 62 / Ende | 356,3 | -30,4 | 1,7 | -0,2 | 5,5 | -61,9 |
| | 141 / Ende | 16,0 | -1,6 | 91,3 | 0,1 | -111,8 | -0,5 |
| | 460 / Anfang | 4,0 | 3,5 | 22,7 | 0,0 | 0,0 | 0,0 |
| CO11(7) | 107 / Ende | -1,4 | 3,6 | 26,1 | 0,0 | 0,0 | 0,0 |
| | 62 / Anfang | -294,6 | 15,5 | -18,1 | -0,4 | -15,6 | -47,3 |
| | 62 / Ende | 423,6 | -28,6 | 5,7 | -0,3 | 15,5 | -56,2 |
| | 141 / Ende | 18,7 | -2,5 | 82,6 | 0,1 | -103,5 | -0,7 |
| | 460 / Anfang | 5,1 | 5,9 | 20,5 | 0,0 | 0,0 | 0,0 |
| CO11(8) | 107 / Ende | -0,4 | -0,2 | 29,1 | 0,0 | 0,0 | 0,0 |
| | 62 / Anfang | 26,1 | 13,0 | 3,2 | 0,1 | 6,8 | -46,9 |
| | 62 / Ende | 116,1 | -27,6 | -3,8 | 0,0 | -6,8 | -61,1 |
| | 141 / Ende | 9,7 | 0,0 | 90,4 | 0,0 | -107,9 | 0,0 |
| | 460 / Anfang | 1,7 | -0,1 | 22,7 | 0,0 | 0,0 | 0,0 |

### Fehlende Lasten

| Name | X [kN] | Y [kN] | Z [kN] | Mx [kNm] | My [kNm] | Mz [kNm] |
|---|---|---|---|---|---|---|
| CO11(30) | -1,0 | -17,1 | -0,2 | 0,2 | -1,1 | 0,0 |
| CO11(31) | -7,9 | 8,5 | 0,0 | -0,1 | -0,5 | 0,0 |
| CO11(32) | -3,0 | -12,0 | -0,1 | 0,1 | -0,9 | 0,0 |
| CO11(33) | -1,8 | -6,1 | 0,0 | 0,0 | -0,6 | 0,0 |
| CO11(34) | -1,5 | -12,9 | -0,1 | 0,1 | -1,0 | 0,0 |
| CO11(35) | -7,7 | 3,6 | 0,0 | -0,1 | -0,7 | 0,0 |
| CO9(36) | 4,3 | -19,9 | 0,0 | 0,0 | -0,4 | 0,0 |
| CO11(37) | -9,4 | 7,5 | 0,0 | -0,2 | -0,7 | 0,0 |
| CO11(38) | -4,1 | -1,3 | 0,0 | 0,0 | -0,5 | 0,0 |
| CO11(39) | -2,8 | -12,2 | -0,1 | 0,1 | -0,9 | 0,0 |
| CO11(40) | -2,0 | -5,9 | 0,0 | 0,0 | -0,6 | 0,0 |
| CO11(19) | -1,2 | -17,0 | -0,2 | 0,2 | -1,1 | 0,0 |
| CO11(22) | -7,8 | 2,9 | 0,0 | -0,1 | -0,7 | 0,0 |
| CO11(24) | -6,8 | 3,6 | 0,0 | -0,1 | -0,8 | 0,0 |
| CO11(25) | -3,9 | -13,0 | -0,1 | 0,1 | -1,1 | 0,0 |
| CO11(26) | -2,7 | -11,4 | -0,1 | 0,1 | -0,8 | 0,0 |
| CO11(27) | -5,3 | 4,5 | 0,0 | -0,1 | -0,6 | 0,0 |
| CO11(28) | -4,4 | -1,1 | 0,0 | -0,1 | -0,8 | 0,0 |
| CO11(29) | -2,0 | -5,1 | 0,0 | 0,0 | -0,6 | 0,0 |
| CO11(10) | -8,7 | 8,1 | 0,0 | -0,2 | -0,6 | 0,0 |
| CO11(11) | -0,5 | -12,5 | -0,1 | 0,1 | -0,8 | 0,0 |
| CO11(13) | -4,3 | -9,6 | -0,1 | 0,1 | -1,0 | 0,0 |
| CO11(14) | -9,3 | 6,5 | 0,0 | -0,2 | -0,8 | 0,0 |
| CO11(1) | -3,3 | -12,9 | -0,1 | 0,1 | -1,0 | 0,0 |
| CO11(5) | -4,5 | -9,4 | -0,1 | 0,1 | -1,0 | 0,0 |
| CO11(7) | -4,0 | -13,6 | -0,1 | 0,2 | -1,1 | 0,0 |
| CO11(8) | -4,7 | -2,0 | 0,0 | 0,0 | -0,6 | 0,0 |

## Nachweis

### Übersicht

| Name | Wert | Nachweisstatus |
|---|---|---|
| Berechnung | 100,0% | OK |
| Platten | 0,6 < 5,0% | OK |
| Schrauben | 88,3 < 100% | OK |
| Schweißnähte | 99,1 < 100% | OK |
| Beulen | Nicht berechnet | |

## Platten

| Name | Material | $t_p$ [mm] | Lasten | $\sigma_{Ed}$ [MPa] | $\varepsilon_{Pl}$ [%] | $\sigma_{c,Ed}$ [MPa] | Status |
|---|---|---|---|---|---|---|---|
| 107-bfl 1 | S 355 | 8,0 | CO11(7) | 154,7 | 0,0 | 0,0 | OK |
| 107-tfl 1 | S 355 | 8,0 | CO11(7) | 145,3 | 0,0 | 0,0 | OK |
| 107-w 1 | S 355 | 5,3 | CO11(7) | 355,2 | 0,1 | 65,4 | OK |
| 62-bfl 1 | Baustahl S 355 | 17,5 | CO11(13) | 343,1 | 0,1 | 0,0 | OK |
| 62-tfl 1 | Baustahl S 355 | 17,5 | CO11(13) | 343,2 | 0,1 | 0,0 | OK |
| 62-w 1 | Baustahl S 355 | 10,0 | CO11(30) | 125,8 | 0,0 | 0,0 | OK |
| 141-bfl 1 | Baustahl S 355 | 10,7 | CO11(22) | 325,6 | 0,1 | 0,0 | OK |
| 141-tfl 1 | Baustahl S 355 | 10,7 | CO11(22) | 321,1 | 0,1 | 0,0 | OK |
| 141-w 1 | Baustahl S 355 | 7,1 | CO11(13) | 271,1 | 0,0 | 0,0 | OK |
| 460-bfl 1 | S 355 | 8,0 | CO11(7) | 180,7 | 0,0 | 0,0 | OK |
| 460-tfl 1 | S 355 | 8,0 | CO11(14) | 169,2 | 0,0 | 0,0 | OK |
| 460-w 1 | S 355 | 5,3 | CO11(7) | 355,4 | 0,2 | 96,5 | OK |
| Verschobene Stirnplatte1a | S 355 | 20,0 | CO11(13) | 355,7 | 0,3 | 43,7 | OK |
| Verschobene Stirnplatte1b | S 355 | 20,0 | CO11(22) | 355,6 | 0,3 | 43,2 | OK |
| STEIFF | S 355 | 12,0 | CO11(13) | 308,2 | 0,0 | 0,0 | OK |
| Rippe1a | S 355 | 15,0 | CO11(7) | 27,5 | 0,0 | 0,0 | OK |
| Rippe1b | S 355 | 15,0 | CO11(13) | 27,8 | 0,0 | 0,0 | OK |
| Verstärkung1 | S 355 | 15,0 | CO11(5) | 221,9 | 0,0 | 0,0 | OK |
| Fahnenblech1 | S 355 | 10,0 | CO11(37) | 355,4 | 0,2 | 69,4 | OK |
| Fahnenblech2 | S 355 | 10,0 | CO11(37) | 356,3 | 0,6 | 129,6 | OK |

**Bemessungsdaten**

| Material | $f_y$ [MPa] | $\varepsilon_{lim}$ [%] |
|---|---|---|
| S 355 | 355,0 | 5,0 |
| Baustahl S 355 | 355,0 | 5,0 |

**Erläuterung von Symbolen**

| | |
|---|---|
| $t_p$ | Plattendicke |
| $\sigma_{Ed}$ | Vergleichsspannung |
| $\varepsilon_{Pl}$ | Plastische Dehnung |
| $\sigma_{c,Ed}$ | Kontaktspannung |
| $f_y$ | Streckgrenze |
| $\varepsilon_{lim}$ | Grenzwert plastische Dehnung |

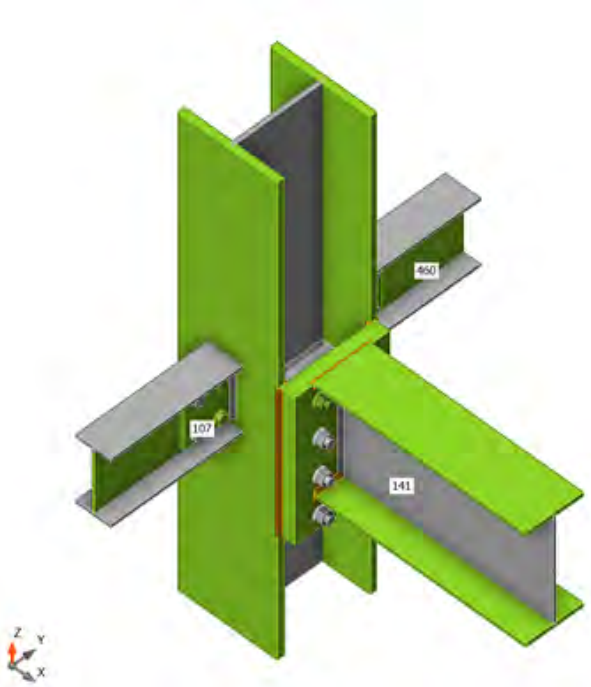


*Gesamt, CO11(37)*

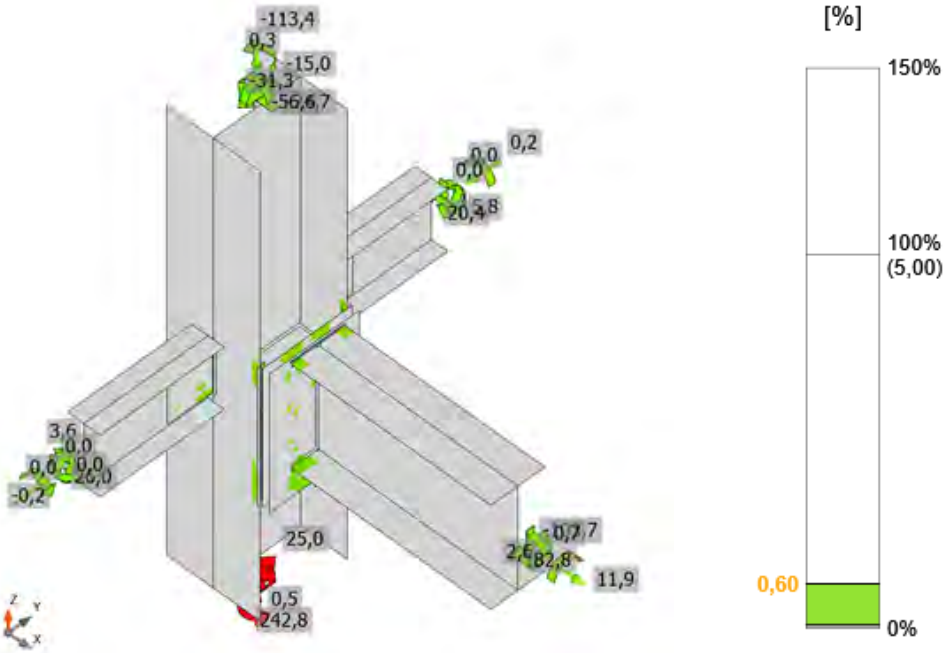


*Dehnung, CO11(37)*

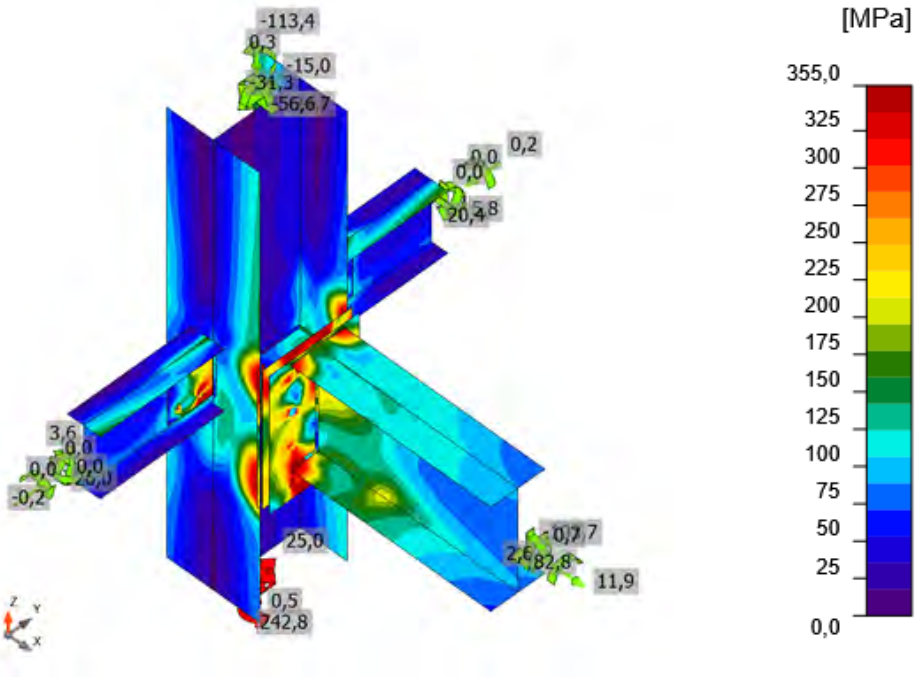


*Vergleichsspannung, CO11(37)*

## Schrauben

| Form | Position | Klasse | Lasten | $F_{t,Ed}$ [kN] | $F_{v,Ed}$ [kN] | $F_{b,Rd}$ [kN] | $Ut_t$ [%] | $Ut_s$ [%] | $Ut_{ts}$ [%] | Konstruktionsregeln | Status |
|---|---|---|---|---|---|---|---|---|---|---|---|
| 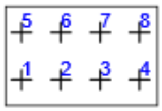 | B1 | M20 8.8 - 1 | CO9(36) | 44,0 | 6,7 | 299,0 | 31,2 | 7,1 | 29,4 | OK | OK |
| | B2 | M20 8.8 - 1 | CO11(22) | 6,2 | 17,0 | 392,0 | 4,4 | 18,0 | 21,2 | OK | OK |
| | B3 | M20 8.8 - 1 | CO11(13) | 101,5 | 14,2 | 392,0 | 71,9 | 15,1 | 66,5 | OK | OK |
| | B4 | M20 8.8 - 1 | CO11(22) | 124,6 | 8,0 | 335,1 | 88,3 | 8,5 | 71,6 | OK | OK |
| | B5 | M20 8.8 - 1 | CO9(36) | 43,8 | 6,3 | 271,5 | 31,0 | 6,7 | 28,9 | OK | OK |
| | B6 | M20 8.8 - 1 | CO11(22) | 6,4 | 17,0 | 392,0 | 4,5 | 18,1 | 21,3 | OK | OK |
| | B7 | M20 8.8 - 1 | CO11(22) | 101,2 | 14,0 | 392,0 | 71,7 | 14,9 | 66,1 | OK | OK |
| | B8 | M20 8.8 - 1 | CO11(22) | 124,6 | 8,5 | 350,9 | 88,3 | 9,0 | 72,1 | OK | OK |
| 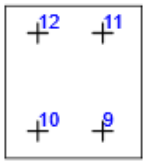 | B9 | M16 8.8 - 2 | CO11(35) | 10,8 | 31,5 | 47,7 | 12,0 | 66,1 | 60,8 | OK | OK |
| | B10 | M16 8.8 - 2 | CO11(29) | 3,6 | 23,1 | 80,1 | 3,9 | 38,4 | 41,2 | OK | OK |
| | B11 | M16 8.8 - 2 | CO11(13) | 15,7 | 30,7 | 65,5 | 17,3 | 50,9 | 63,2 | OK | OK |
| | B12 | M16 8.8 - 2 | CO11(13) | 3,6 | 23,7 | 83,1 | 4,0 | 39,4 | 42,2 | OK | OK |
| 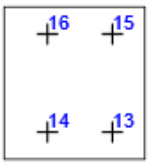 | B13 | M16 8.8 - 2 | CO11(8) | 2,7 | 18,1 | 80,6 | 3,0 | 30,0 | 32,1 | OK | OK |
| | B14 | M16 8.8 - 2 | CO11(37) | 30,9 | 24,2 | 47,7 | 34,2 | 50,6 | 64,5 | OK | OK |
| | B15 | M16 8.8 - 2 | CO11(34) | 3,6 | 20,3 | 83,1 | 3,9 | 33,6 | 36,4 | OK | OK |
| | B16 | M16 8.8 - 2 | CO11(30) | 35,0 | 21,3 | 66,3 | 38,7 | 35,3 | 63,0 | OK | OK |

**Bemessungsdaten**

| Klasse | $F_{t,Rd}$ [kN] | $B_{p,Rd}$ [kN] | $F_{v,Rd}$ [kN] |
|---|---|---|---|
| M20 8.8 - 1 | 141,1 | 469,4 | 94,1 |
| M16 8.8 - 2 | 90,4 | 99,4 | 60,3 |

**Erläuterung von Symbolen**

| | |
|---|---|
| $F_{t,Ed}$ | Zugkraft |
| $F_{v,Ed}$ | Resultierende der Schraubenscherkräfte Vy und Vz in Scherebenen |
| $F_{b,Rd}$ | Lochleibungstragfähigkeit der Platte nach EN 1993-1-8 Tab. 3.4 |
| $Ut_t$ | Ausnutzung unter Zug |
| $Ut_s$ | Ausnutzung unter Schub |
| $Ut_{ts}$ | Interaktion von Zug und Schub EN_1993-1-8 Tabelle 3.4 |
| $F_{t,Rd}$ | Zugtragfähigkeit der Schraube nach EN 1993-1-8 Tabelle 3.4 |
| $B_{p,Rd}$ | Durchstanztragfähigkeit nach EN 1993-1-8 Tabelle 3.4 |
| $F_{v,Rd}$ | Schertragfähigkeit der Schraube nach EN 1993-1-8 Tabelle 3.4 |

## Schweißnähte

| Position | Kante | $T_w$ [mm] | L [mm] | Lasten | $\sigma_{w,Ed}$ [MPa] | $\varepsilon_{Pl}$ [%] | $\sigma_{\perp}$ [MPa] | $\tau_{\perp}$ [MPa] | $\tau_{\parallel}$ [MPa] | Ut [%] | $Ut_c$ [%] | Konstruktionsregeln | Status |
|---|---|---|---|---|---|---|---|---|---|---|---|---|---|
| Verschobene Stirnplatte1a | 62-tfl 1 | ◢ 6,0 ◣ | 383 | CO11(13) | 409,9 | 0,0 | -90,0 | -123,8 | 194,9 | 94,1 | 68,1 | OK | OK |
| | | ◢ 6,0 ◣ | 383 | CO11(13) | 430,9 | 2,3 | -295,7 | -180,6 | 11,3 | 98,9 | 93,9 | OK | OK |
| Verschobene Stirnplatte1a | 62-bfl 1 | ◢ 6,0 ◣ | 383 | CO11(22) | 431,0 | 2,4 | -296,9 | 180,2 | -7,9 | 99,0 | 94,0 | OK | OK |
| | | ◢ 6,0 ◣ | 383 | CO11(13) | 408,1 | 0,0 | -88,4 | 124,8 | -193,3 | 93,7 | 68,1 | OK | OK |
| Verschobene Stirnplatte1b | 141-bfl 1 | ◢ 6,0 ◣ | 150 | CO11(13) | 426,9 | 0,1 | 183,6 | 96,7 | 200,4 | 98,0 | 72,8 | OK | OK |
| | | ◢ 6,0 ◣ | 150 | CO9(36) | 424,0 | 0,0 | -216,1 | -144,1 | -153,6 | 97,3 | 57,8 | OK | OK |
| Verschobene Stirnplatte1b | 141-tfl 1 | ◢ 6,0 ◣ | 149 | CO11(13) | 431,6 | 2,8 | -185,0 | -179,5 | 135,9 | 99,1 | 93,6 | OK | OK |
| | | ◢ 6,0 ◣ | 150 | CO11(13) | 430,4 | 2,1 | -173,4 | 180,3 | -138,7 | 98,8 | 95,7 | OK | OK |
| Verschobene Stirnplatte1b | 141-w 1 | ◢ 6,0 ◣ | 288 | CO11(13) | 249,1 | 0,0 | 120,0 | 123,8 | -23,4 | 57,2 | 36,3 | OK | OK |
| | | ◢ 6,0 ◣ | 288 | CO11(13) | 246,6 | 0,0 | 124,3 | -120,4 | 25,0 | 56,6 | 35,2 | OK | OK |
| 62-bfl 1 | STEIFF | ◢ 6,0 ◣ | 124 | CO11(13) | 163,7 | 0,0 | -43,3 | -22,6 | 88,3 | 37,6 | 27,7 | OK | OK |
| | | ◢ 6,0 ◣ | 124 | CO11(13) | 177,9 | 0,0 | 62,8 | -20,2 | -94,0 | 40,9 | 28,6 | OK | OK |
| 62-w 1 | STEIFF | ◢ 6,0 ◣ | 225 | CO11(35) | 72,5 | 0,0 | 4,2 | 5,1 | 41,5 | 16,7 | 13,0 | OK | OK |
| | | ◢ 6,0 ◣ | 224 | CO11(5) | 101,6 | 0,0 | 2,9 | -4,3 | -58,5 | 23,3 | 18,6 | OK | OK |
| 62-tfl 1 | STEIFF | ◢ 6,0 ◣ | 124 | CO11(13) | 163,2 | 0,0 | -45,5 | -24,3 | -87,1 | 37,5 | 26,1 | OK | OK |
| | | ◢ 6,0 ◣ | 124 | CO11(13) | 178,1 | 0,0 | 62,1 | -19,5 | 94,4 | 40,9 | 29,0 | OK | OK |
| Verschobene Stirnplatte1a | STEIFF | ◢ 6,0 ◣ | 224 | CO11(13) | 388,3 | 0,0 | 116,1 | 107,8 | -184,8 | 89,2 | 63,8 | OK | OK |
| | | ◢ 6,0 ◣ | 224 | CO11(22) | 175,8 | 0,0 | 0,8 | -56,4 | -84,3 | 40,4 | 27,9 | OK | OK |
| 62-bfl 1 | Rippe1a | ◢ 6,0 ◣ | 100 | CO11(25) | 26,6 | 0,0 | 10,6 | 8,4 | 11,3 | 6,1 | 6,1 | OK | OK |

| Position | Kante | $T_w$ [mm] | L [mm] | Lasten | $\sigma_{w,Ed}$ [MPa] | $\varepsilon_{Pl}$ [%] | $\sigma_{\perp}$ [MPa] | $\tau_{\perp}$ [MPa] | $\tau_{\parallel}$ [MPa] | Ut [%] | $Ut_c$ [%] | Konstruktionsregeln | Status |
|---|---|---|---|---|---|---|---|---|---|---|---|---|---|
| | | ◢ 6,0 ◣ | 101 | CO11(37) | 25,7 | 0,0 | 7,5 | -9,2 | -10,7 | 5,9 | 5,9 | OK | OK |
| 62-w 1 | Rippe1a | ◢ 6,0 ◣ | 177 | CO11(30) | 67,7 | 0,0 | -13,1 | -10,0 | -37,0 | 15,5 | 10,2 | OK | OK |
| | | ◢ 6,0 ◣ | 177 | CO11(30) | 64,2 | 0,0 | -4,5 | 7,5 | 36,2 | 14,7 | 9,8 | OK | OK |
| 62-tfl 1 | Rippe1a | ◢ 6,0 ◣ | 101 | CO11(37) | 44,5 | 0,0 | 20,1 | 17,7 | -14,6 | 10,2 | 8,4 | OK | OK |
| | | ◢ 6,0 ◣ | 101 | CO11(37) | 39,0 | 0,0 | 11,2 | -13,7 | 16,7 | 9,0 | 7,8 | OK | OK |
| 62-bfl 1 | Rippe1b | ◢ 6,0 ◣ | 101 | CO11(22) | 54,5 | 0,0 | -21,6 | -28,4 | -5,6 | 12,5 | 9,3 | OK | OK |
| | | ◢ 6,0 ◣ | 101 | CO11(13) | 53,2 | 0,0 | -24,8 | 17,2 | 21,1 | 12,2 | 8,7 | OK | OK |
| 62-w 1 | Rippe1b | ◢ 6,0 ◣ | 177 | CO11(37) | 55,8 | 0,0 | 5,5 | 6,3 | 31,4 | 12,8 | 8,7 | OK | OK |
| | | ◢ 6,0 ◣ | 177 | CO11(35) | 52,2 | 0,0 | 13,0 | -12,2 | -26,5 | 12,0 | 8,7 | OK | OK |
| 62-tfl 1 | Rippe1b | ◢ 6,0 ◣ | 101 | CO11(7) | 57,8 | 0,0 | -22,0 | -28,9 | 10,9 | 13,3 | 8,4 | OK | OK |
| | | ◢ 6,0 ◣ | 101 | CO11(7) | 58,3 | 0,0 | -24,8 | 17,8 | -24,7 | 13,4 | 8,3 | OK | OK |
| Verschobene Stirnplatte1b | Verstärkung1 | ◢ 4,0 ◣ | 90 | CO11(22) | 428,6 | 1,0 | -203,7 | -203,7 | 76,8 | 98,4 | 76,4 | OK | OK |
| | | ◢ 4,0 ◣ | 90 | CO11(13) | 428,6 | 1,0 | -203,3 | 204,1 | -76,4 | 98,4 | 77,6 | OK | OK |
| 141-tfl 1 | Verstärkung1 | ◢ 4,0 ◣ | 179 | CO11(22) | 427,8 | 0,6 | -137,1 | -136,9 | -189,8 | 98,2 | 73,4 | OK | OK |
| | | ◢ 4,0 ◣ | 179 | CO11(22) | 427,8 | 0,6 | -137,2 | 137,3 | 189,5 | 98,2 | 73,3 | OK | OK |
| 62-bfl 1 | Fahnenblech1 | ◢ 6,0 ◣ | 138 | CO11(25) | 147,2 | 0,0 | -55,6 | -78,0 | 10,6 | 33,8 | 24,0 | OK | OK |
| | | ◢ 6,0 ◣ | 138 | CO11(22) | 195,8 | 0,0 | 105,3 | -92,4 | -23,0 | 44,9 | 30,9 | OK | OK |
| 62-tfl 1 | Fahnenblech2 | ◢ 6,0 ◣ | 139 | CO11(37) | 193,5 | 0,0 | -35,2 | -82,2 | -72,9 | 44,4 | 34,8 | OK | OK |
| | | ◢ 6,0 ◣ | 138 | CO11(30) | 179,8 | 0,0 | 76,5 | -84,3 | 41,5 | 41,3 | 31,2 | OK | OK |

**Bemessungsdaten**

| Material | $f_u$ [MPa] | $\beta_w$ [-] | $\sigma_{w,Rd}$ [MPa] | 0.9 σ [MPa] |
|---|---|---|---|---|
| S 355 | 490,0 | 0,90 | 435,6 | 352,8 |

**Erläuterung von Symbolen**

| | |
|---|---|
| $T_w$ | Nahtdicke a |
| L | Länge |
| $\sigma_{w,Ed}$ | Vergleichsspannung |
| $\varepsilon_{Pl}$ | Dehnung |
| $\sigma_{\perp}$ | Senkrechte Spannung |
| $\tau_{\perp}$ | Scherspannung senkrecht zur Schweißnahtachse |
| $\tau_{\parallel}$ | Scherspannung parallel zur Schweißnahtachse |
| Ut | Ausnutzung |
| $Ut_c$ | Schätzung der Schweißnahtkapazität |
| ◢ | Kehlnaht |
| $f_u$ | Grenzfestigkeit der Schweißnaht |
| $\beta_w$ | Korrelationsfaktor nach EN 1993-1-8 Tab. 4.1 |
| $\sigma_{w,Rd}$ | Tragfähigkeit der Schweißnaht |
| 0.9 σ | Senkrechter Spannungswiderstand - 0.9*fu / γM2 |

### Beulen

**Die Beulanalyse wurde nicht berechnet.**

## Normeinstellungen

| Position | Wert | Einheit | Bezug |
|---|---|---|---|
| Sicherheitsfaktor $\gamma_{M0}$ | 1,00 | - | EN 1993-1-1 – 6.1 |
| Sicherheitsfaktor $\gamma_{M1}$ | 1,00 | - | EN 1993-1-1 – 6.1 |
| Sicherheitsfaktor $\gamma_{M2}$ | 1,25 | - | EN 1993-1-1 – 6.1 |
| Sicherheitsfaktor $\gamma_{M3}$ | 1,25 | - | EN 1993-1-8 – Table 2.1 |
| Sicherheitsfaktor $\gamma_C$ | 1,50 | - | EN 1992-1-1 – 2.4.2.4 |
| Sicherheitsfaktor $\gamma_{Inst}$ | 1,20 | - | EN 1992-4 – Table 4.1 |
| Verbindungskoeffizient βj | 0,67 | - | EN 1993-1-8 – 6.2.5(7) |
| Wirksame Fläche - Einfluss der Netzgröße | 0,10 | - | |
| Reibungsbeiwert - Beton | 0,25 | - | EN 1993-1-8 |
| Reibungskoeffizient bei gleitfesten Verbindungen | 0,30 | - | EN 1993-1-8 – Table 3.7 |
| Plastische Dehnung - Grenzwert | 0,05 | - | EN 1993-1-5 |
| Konstruktionsregeln | Ja | | |
| Distance between bolts [d0] | 2,20 | - | EN 1993-1-8 – Table 3.3 |
| Distance between bolts and edge [d0] | 1,20 | - | EN 1993-1-8 – Table 3.3 |
| Nachweis der Tragfähigkeit bei Betonausbruch | Beide | | |
| Berechnetes αb für Lochleibungsnachweis anwenden. | Ja | | EN 1993-1-8 – Table 3.4 |
| Gerissener Beton | Ja | | EN 1992-4 |
| Überprüfen der lokalen Verformung | Ja | | |
| Lokale Verformung - Grenzwert | 0,03 | - | CIDECT DG 1, 3 – 1.1 |
| Geometrische Nichtlinearität (GMNA) | Ja | | Analyse mit großen Verformungen für Verbindungen mit Hohlprofilen |
| Ausgesteiftes System | Nein | | EN 1993-1-8 – 5.2.2.5 |

## Projektdaten

| | |
|---|---|
| Projektname | IdeaStatiCa-Stadion_Fazanerija_JK-6_BR - 52 |
| Projektnummer | Detajl D14-O1 |
| Autor | mag. Igor Gorup dipl.ing. |
| Beschreibung | |
| Datum | 18.06.2025 |
| Norm | EN |

## Material

| | |
|---|---|
| Stahl | Baustahl S 355, S 355 |

# Projektposition 52

## Bemessung

| | |
|---|---|
| Name | 52 |
| Beschreibung | |
| Berechnung | Spannung, Dehnung/ Lasten im Gleichgewicht |

### Bauteile

#### Geometrie

| Name | Querschnitt | β – Rotation [°] | Y - Rotation [°] | α - Rotation [°] | Abstand ex [mm] | Abstand ey [mm] | Abstand ez [mm] |
|---|---|---|---|---|---|---|---|
| 460 | 290 - IPE180 | -90,0 | 0,0 | -180,0 | 0 | 0 | 0 |
| 63 | 289 - HEB260 | -180,0 | 90,0 | 90,0 | 0 | 0 | 0 |
| 142 | 24 - IPE240 | 0,0 | 0,0 | -180,0 | 0 | 0 | 30 |

#### Auflager und Kräfte

| Name | Auflager | Kräfte in | X [mm] |
|---|---|---|---|
| 460 / ende | | Position | 0 |
| 63 / anfang | N-Vy-Vz-Mx-My-Mz | Position | 0 |
| 63 / ende | | Position | 0 |
| 142 / ende | | Position | 0 |

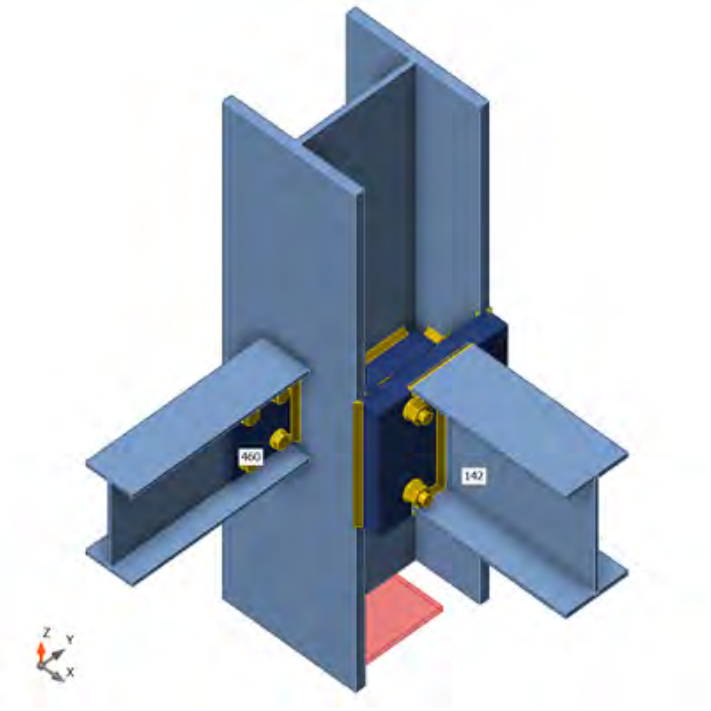


### Querschnitte

| Name | Material |
|---|---|
| 290 - IPE180 | S 355 |
| 289 - HEB260 | Baustahl S 355 |
| 24 - IPE240 | Baustahl S 355 |

## Schrauben

| Name | Durchmesser [mm] | $f_y$ [MPa] | $f_u$ [MPa] | Bruttofläche [$mm^2$] |
|---|---|---|---|---|
| M20 8.8 | 20 | 640,0 | 800,0 | 314 |
| M16 8.8 | 16 | 640,0 | 800,0 | 201 |

## Lasteinwirkungen (Kräfte im Gleichgewicht)

| Name | Bauteil | N [kN] | Vy [kN] | Vz [kN] | Mx [kNm] | My [kNm] | Mz [kNm] |
|---|---|---|---|---|---|---|---|
| CO11(23) | 460 / Ende | -5,9 | 5,9 | 20,5 | 0,0 | 0,0 | 0,0 |
| | 63 / Anfang | 844,7 | 2,1 | -26,1 | -0,2 | -24,8 | -18,3 |
| | 63 / Ende | -790,8 | -10,0 | 13,1 | -0,1 | 24,8 | -21,0 |
| | 142 / Ende | 18,6 | -0,9 | 33,6 | 0,0 | -39,4 | -0,3 |
| CO11(24) | 460 / Ende | -0,2 | 5,9 | 20,4 | 0,0 | 0,0 | 0,0 |
| | 63 / Anfang | -36,1 | 7,6 | 24,9 | 0,2 | 31,4 | -22,9 |
| | 63 / Ende | 87,6 | -11,3 | -15,0 | 0,1 | -31,4 | -20,5 |
| | 142 / Ende | 2,5 | 1,8 | 31,1 | 0,0 | -43,3 | 0,3 |
| CO11(25) | 460 / Ende | -4,0 | 3,5 | 22,7 | 0,0 | 0,0 | 0,0 |
| | 63 / Anfang | 745,8 | 5,9 | -10,8 | -0,1 | -5,8 | -26,1 |
| | 63 / Ende | -684,0 | -13,8 | 4,0 | -0,1 | 5,7 | -27,6 |
| | 142 / Ende | 13,0 | -0,5 | 39,2 | 0,0 | -53,7 | -0,2 |
| CO9(26) | 460 / Ende | -5,3 | 0,0 | 0,0 | 0,0 | 0,0 | 0,0 |
| | 63 / Anfang | 66,7 | -11,6 | -33,6 | 0,0 | -45,5 | 24,5 |
| | 63 / Ende | -73,9 | 3,5 | 17,6 | 0,0 | 45,5 | 1,6 |
| | 142 / Ende | 13,8 | 0,0 | -7,2 | 0,0 | 26,1 | 0,0 |
| CO11(27) | 460 / Ende | -1,2 | 5,9 | 20,4 | 0,0 | 0,0 | 0,0 |
| | 63 / Anfang | 255,3 | 3,2 | 18,9 | 0,2 | 27,8 | -16,2 |
| | 63 / Ende | -205,6 | -8,4 | -11,9 | 0,0 | -27,8 | -17,1 |
| | 142 / Ende | 5,4 | 1,7 | 29,2 | 0,0 | -33,3 | 0,2 |
| CO11(28) | 460 / Ende | -4,9 | 6,0 | 20,5 | 0,0 | 0,0 | 0,0 |
| | 63 / Anfang | 550,5 | 6,8 | -18,2 | -0,2 | -19,5 | -25,7 |
| | 63 / Ende | -494,4 | -12,9 | 8,0 | -0,1 | 19,4 | -24,6 |
| | 142 / Ende | 15,5 | -0,8 | 35,8 | 0,0 | -50,3 | -0,3 |
| CO11(29) | 460 / Ende | -5,2 | 6,0 | 20,5 | 0,0 | 0,0 | 0,0 |
| | 63 / Anfang | 835,4 | 6,2 | -19,5 | -0,2 | -16,3 | -26,6 |
| | 63 / Ende | -777,8 | -13,2 | 9,0 | -0,1 | 16,3 | -25,9 |
| | 142 / Ende | 16,4 | -0,9 | 37,2 | 0,0 | -52,5 | -0,4 |
| CO11(30) | 460 / Ende | -4,1 | 6,0 | 11,3 | 0,0 | 0,0 | 0,0 |
| | 63 / Anfang | 457,1 | 5,6 | -17,8 | -0,1 | -19,2 | -18,3 |
| | 63 / Ende | -423,5 | -8,8 | 8,4 | -0,1 | 19,2 | -15,6 |
| | 142 / Ende | 12,7 | -0,8 | 22,4 | 0,0 | -33,9 | -0,2 |
| CO11(31) | 460 / Ende | -0,5 | 5,9 | 11,3 | 0,0 | 0,0 | 0,0 |
| | 63 / Anfang | 163,9 | 1,8 | 18,2 | 0,1 | 26,4 | -9,1 |
| | 63 / Ende | -136,7 | -4,0 | -11,0 | 0,0 | -26,4 | -8,0 |
| | 142 / Ende | 2,9 | 1,7 | 15,9 | 0,0 | -17,1 | 0,1 |
| CO11(32) | 460 / Ende | -2,2 | 3,5 | 20,4 | 0,0 | 0,0 | 0,0 |
| | 63 / Anfang | 679,4 | 1,5 | 8,9 | 0,1 | 21,2 | -15,4 |
| | 63 / Ende | -627,7 | -9,0 | -6,7 | -0,1 | -21,2 | -19,4 |
| | 142 / Ende | 7,9 | 1,0 | 31,3 | 0,0 | -34,8 | 0,1 |
| CO11(33) | 460 / Ende | -4,7 | 3,5 | 22,7 | 0,0 | 0,0 | 0,0 |
| | 63 / Anfang | 755,0 | 1,8 | -17,2 | -0,2 | -14,2 | -17,9 |
| | 63 / Ende | -696,8 | -10,6 | 8,0 | -0,1 | 14,2 | -22,8 |
| | 142 / Ende | 15,2 | -0,6 | 35,6 | 0,0 | -40,7 | -0,3 |
| CO11(34) | 460 / Ende | 0,4 | 5,9 | 11,3 | 0,0 | 0,0 | 0,0 |
| | 63 / Anfang | -127,1 | 5,7 | 24,0 | 0,1 | 29,7 | -15,2 |
| | 63 / Ende | 156,0 | -6,8 | -14,0 | 0,1 | -29,6 | -11,5 |
| | 142 / Ende | 0,2 | 1,7 | 17,6 | 0,0 | -26,7 | 0,2 |

| Name | Bauteil | N [kN] | Vy [kN] | Vz [kN] | Mx [kNm] | My [kNm] | Mz [kNm] |
|---|---|---|---|---|---|---|---|
| CO11(12) | 460 / Ende | -5,0 | 3,5 | 20,5 | 0,0 | 0,0 | 0,0 |
| | 63 / Anfang | 1034,5 | 0,8 | -18,9 | -0,2 | -11,2 | -16,6 |
| | 63 / Ende | -980,2 | -9,9 | 9,3 | -0,1 | 11,2 | -21,9 |
| | 142 / Ende | 15,8 | -0,6 | 33,9 | 0,0 | -38,5 | -0,3 |
| CO11(16) | 460 / Ende | 0,1 | 5,9 | 16,5 | 0,0 | 0,0 | 0,0 |
| | 63 / Anfang | -114,0 | 6,8 | 24,5 | 0,2 | 30,1 | -19,3 |
| | 63 / Ende | 155,1 | -9,1 | -14,5 | 0,1 | -30,1 | -16,0 |
| | 142 / Ende | 1,2 | 1,8 | 24,6 | 0,0 | -35,4 | 0,3 |
| CO11(18) | 460 / Ende | -4,5 | 6,0 | 16,5 | 0,0 | 0,0 | 0,0 |
| | 63 / Anfang | 471,2 | 6,4 | -17,9 | -0,1 | -19,7 | -22,3 |
| | 63 / Ende | -425,4 | -10,8 | 8,0 | -0,1 | 19,7 | -20,1 |
| | 142 / Ende | 14,0 | -0,8 | 29,3 | 0,0 | -42,4 | -0,2 |
| CO11(22) | 460 / Ende | -0,5 | 5,9 | 20,4 | 0,0 | 0,0 | 0,0 |
| | 63 / Anfang | 246,8 | 7,1 | 24,8 | 0,2 | 35,7 | -23,6 |
| | 63 / Ende | -193,9 | -11,6 | -15,3 | 0,1 | -35,6 | -21,6 |
| | 142 / Ende | 3,4 | 1,8 | 32,5 | 0,0 | -45,2 | 0,3 |
| CO11(3) | 460 / Ende | -4,4 | 6,0 | 11,3 | 0,0 | 0,0 | 0,0 |
| | 63 / Anfang | 684,3 | 5,3 | -18,8 | -0,1 | -16,8 | -19,1 |
| | 63 / Ende | -649,5 | -9,2 | 9,1 | -0,1 | 16,8 | -16,6 |
| | 142 / Ende | 13,4 | -0,8 | 23,6 | 0,0 | -35,7 | -0,2 |
| CO11(4) | 460 / Ende | -2,7 | -0,1 | 22,7 | 0,0 | 0,0 | 0,0 |
| | 63 / Anfang | 611,7 | 1,1 | -4,0 | 0,0 | 2,0 | -15,0 |
| | 63 / Ende | -554,8 | -10,3 | 1,0 | -0,1 | -1,9 | -22,5 |
| | 142 / Ende | 9,2 | -0,1 | 34,2 | 0,0 | -37,5 | -0,1 |
| CO11(6) | 460 / Ende | -0,9 | 3,5 | 22,7 | 0,0 | 0,0 | 0,0 |
| | 63 / Anfang | 108,8 | 7,2 | 16,5 | 0,1 | 21,8 | -23,7 |
| | 63 / Ende | -51,2 | -12,7 | -10,6 | 0,1 | -21,8 | -23,8 |
| | 142 / Ende | 4,2 | 1,1 | 35,0 | 0,0 | -47,6 | 0,2 |
| CO11(9) | 460 / Ende | -1,3 | 0,0 | 18,7 | 0,0 | 0,0 | 0,0 |
| | 63 / Anfang | 240,0 | 5,2 | 3,1 | 0,0 | 5,9 | -18,9 |
| | 63 / Ende | -191,4 | -11,2 | -3,0 | 0,0 | -5,9 | -21,6 |
| | 142 / Ende | 4,7 | 0,0 | 29,8 | 0,0 | -40,5 | 0,0 |
| CO11(10) | 460 / Ende | -4,4 | 6,0 | 11,3 | 0,0 | 0,0 | 0,0 |
| | 63 / Anfang | 741,8 | 5,3 | -18,9 | -0,1 | -15,9 | -19,3 |
| | 63 / Ende | -706,7 | -9,2 | 9,3 | -0,1 | 15,9 | -16,9 |
| | 142 / Ende | 13,5 | -0,8 | 23,9 | 0,0 | -36,1 | -0,2 |
| CO11(11) | 460 / Ende | -2,7 | -0,1 | 22,7 | 0,0 | 0,0 | 0,0 |
| | 63 / Anfang | 554,1 | 1,3 | -3,8 | 0,0 | 1,1 | -14,9 |
| | 63 / Ende | -497,5 | -10,3 | 0,7 | -0,1 | -1,1 | -22,3 |
| | 142 / Ende | 9,1 | -0,1 | 33,9 | 0,0 | -37,2 | -0,1 |

### Fehlende Lasten

| Name | X [kN] | Y [kN] | Z [kN] | Mx [kNm] | My [kNm] | Mz [kNm] |
|---|---|---|---|---|---|---|
| CO11(23) | 4,8 | -6,2 | -0,1 | 0,0 | -0,6 | 0,0 |
| CO11(24) | -7,1 | 8,3 | 0,0 | -0,1 | -0,1 | 0,0 |
| CO11(25) | 1,6 | -2,2 | 0,0 | 0,0 | -0,4 | 0,0 |
| CO9(26) | 5,8 | -10,8 | 0,0 | 0,0 | -0,4 | 0,0 |
| CO11(27) | -5,6 | 6,4 | 0,0 | -0,1 | -0,2 | 0,0 |
| CO11(28) | 3,4 | -4,5 | -0,1 | 0,0 | -0,5 | 0,0 |
| CO11(29) | 3,4 | -4,5 | -0,1 | 0,0 | -0,5 | 0,0 |
| CO11(30) | 3,5 | -4,5 | -0,1 | 0,0 | -0,4 | 0,0 |
| CO11(31) | -5,3 | 6,1 | 0,0 | -0,1 | -0,1 | 0,0 |
| CO11(32) | -3,1 | 3,5 | 0,0 | 0,0 | -0,2 | 0,0 |
| CO11(33) | 3,0 | -3,9 | -0,1 | 0,0 | -0,5 | 0,0 |
| CO11(34) | -6,8 | 7,9 | 0,0 | -0,1 | 0,0 | 0,0 |
| CO11(12) | 3,1 | -4,0 | -0,1 | 0,0 | -0,5 | 0,0 |
| CO11(16) | -6,9 | 8,1 | 0,0 | -0,1 | 0,0 | 0,0 |
| CO11(18) | 3,6 | -4,6 | -0,1 | 0,0 | -0,4 | 0,0 |
| CO11(22) | -7,1 | 8,2 | 0,0 | -0,1 | -0,1 | 0,0 |
| CO11(3) | 3,6 | -4,6 | -0,1 | 0,0 | -0,4 | 0,0 |
| CO11(4) | 0,1 | -0,3 | 0,0 | 0,0 | -0,3 | 0,0 |
| CO11(6) | -4,9 | 5,6 | 0,0 | 0,0 | -0,1 | 0,0 |
| CO11(9) | -1,2 | 1,4 | 0,0 | 0,0 | -0,1 | 0,0 |
| CO11(10) | 3,5 | -4,4 | -0,1 | 0,0 | -0,4 | 0,0 |
| CO11(11) | 0,2 | -0,4 | 0,0 | 0,0 | -0,3 | 0,0 |

## Nachweis

### Übersicht

| Name | Wert | Nachweisstatus |
|---|---|---|
| Berechnung | 100,0% | OK |
| Platten | 0,6 < 5,0% | OK |
| Schrauben | 88,6 < 100% | OK |
| Schweißnähte | 99,3 < 100% | OK |
| Beulen | Nicht berechnet | |

## Platten

| Name | Material | $t_p$ [mm] | Lasten | $\sigma_{Ed}$ [MPa] | $\varepsilon_{Pl}$ [%] | $\sigma_{c,Ed}$ [MPa] | Status |
|---|---|---|---|---|---|---|---|
| 460-bfl 1 | S 355 | 8,0 | CO11(29) | 179,8 | 0,0 | 0,0 | OK |
| 460-tfl 1 | S 355 | 8,0 | CO11(24) | 169,4 | 0,0 | 0,0 | OK |
| 460-w 1 | S 355 | 5,3 | CO11(29) | 355,4 | 0,2 | 94,6 | OK |
| 63-bfl 1 | Baustahl S 355 | 17,5 | CO11(29) | 355,1 | 0,0 | 0,0 | OK |
| 63-tfl 1 | Baustahl S 355 | 17,5 | CO11(25) | 355,1 | 0,0 | 0,0 | OK |
| 63-w 1 | Baustahl S 355 | 10,0 | CO11(29) | 128,9 | 0,0 | 0,0 | OK |
| 142-bfl 1 | Baustahl S 355 | 9,8 | CO11(25) | 355,4 | 0,2 | 0,0 | OK |
| 142-tfl 1 | Baustahl S 355 | 9,8 | CO11(25) | 333,2 | 0,2 | 0,0 | OK |
| 142-w 1 | Baustahl S 355 | 6,2 | CO11(25) | 234,6 | 0,0 | 0,0 | OK |
| Verschobene Stirnplatte1a | S 355 | 20,0 | CO11(25) | 356,3 | 0,6 | 100,6 | OK |
| Verschobene Stirnplatte1b | S 355 | 20,0 | CO11(25) | 355,3 | 0,2 | 100,6 | OK |
| STEIFF | S 355 | 15,0 | CO11(25) | 355,1 | 0,0 | 0,0 | OK |
| Fahnenblech1 | S 355 | 10,0 | CO11(24) | 356,2 | 0,5 | 107,3 | OK |
| Rippe1a | S 355 | 15,0 | CO11(29) | 27,2 | 0,0 | 0,0 | OK |
| Rippe1b | S 355 | 15,0 | CO11(29) | 22,0 | 0,0 | 0,0 | OK |

**Bemessungsdaten**

| Material | $f_y$ [MPa] | $\varepsilon_{lim}$ [%] |
|---|---|---|
| S 355 | 355,0 | 5,0 |
| Baustahl S 355 | 355,0 | 5,0 |

**Erläuterung von Symbolen**

| | |
|---|---|
| $t_p$ | Plattendicke |
| $\sigma_{Ed}$ | Vergleichsspannung |
| $\varepsilon_{Pl}$ | Plastische Dehnung |
| $\sigma_{c,Ed}$ | Kontaktspannung |
| $f_y$ | Streckgrenze |
| $\varepsilon_{lim}$ | Grenzwert plastische Dehnung |

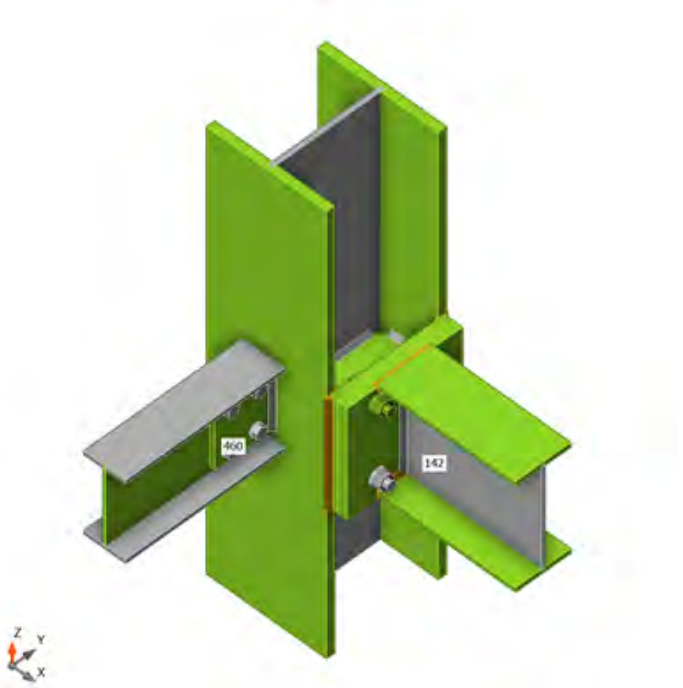


*Gesamt, CO11(25)*

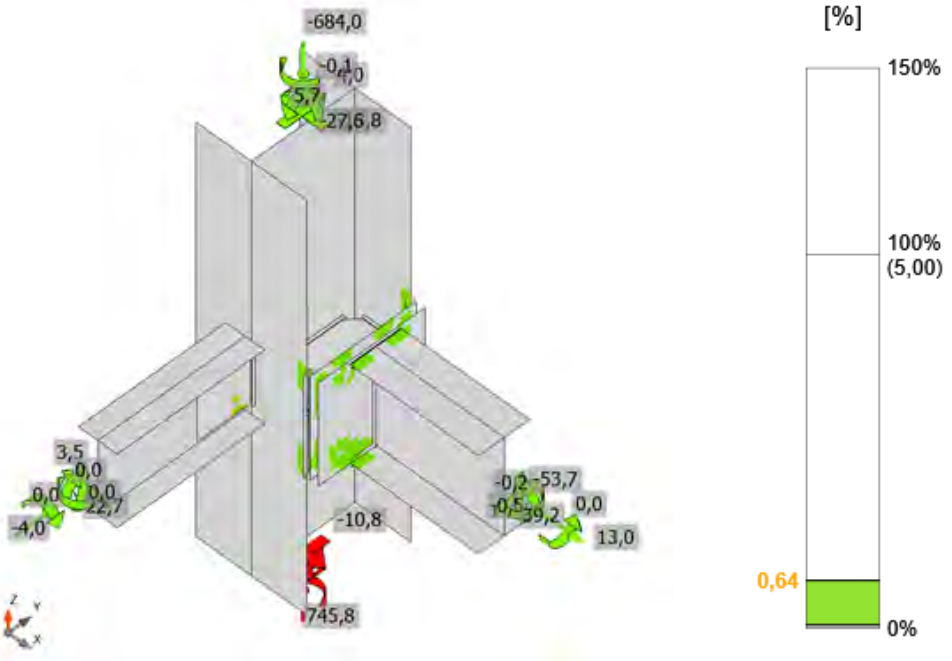


*Dehnung, CO11(25)*

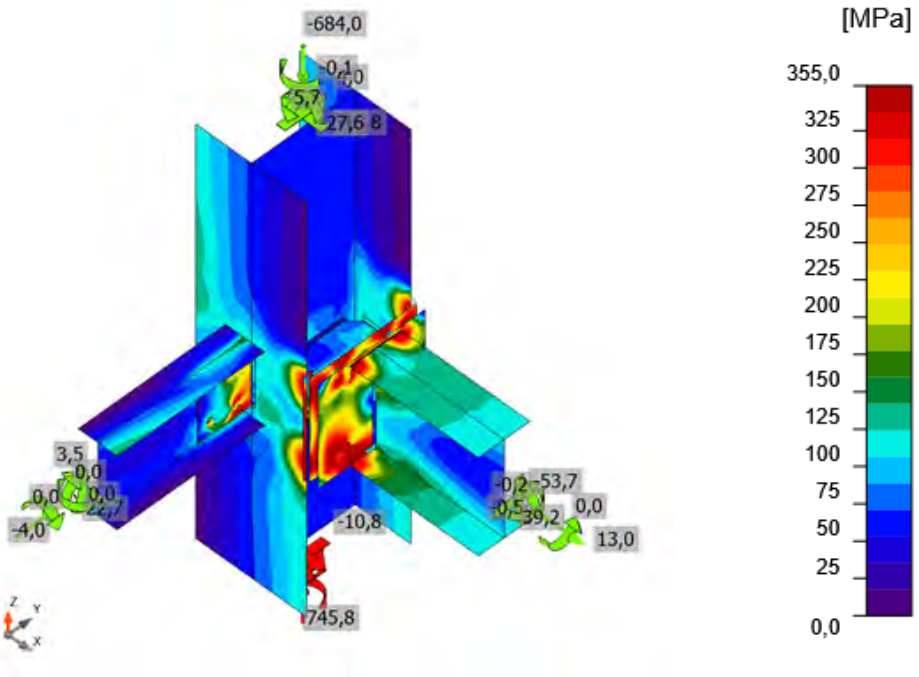


*Vergleichsspannung, CO11(25)*

## Schrauben

| Form | Position | Klasse | Lasten | $F_{t,Ed}$ [kN] | $F_{v,Ed}$ [kN] | $F_{b,Rd}$ [kN] | $Ut_t$ [%] | $Ut_s$ [%] | $Ut_{ts}$ [%] | Konstruktionsregeln | Status |
|---|---|---|---|---|---|---|---|---|---|---|---|
| 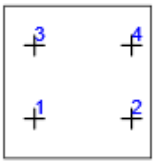 | B1 | M20 8.8 - 1 | CO9(26) | 75,4 | 5,8 | 383,7 | 53,5 | 6,1 | 44,3 | OK | OK |
| | B2 | M20 8.8 - 1 | CO11(25) | 125,0 | 9,1 | 198,4 | 88,6 | 9,6 | 72,9 | OK | OK |
| | B3 | M20 8.8 - 1 | CO9(26) | 75,2 | 5,9 | 375,4 | 53,3 | 6,3 | 44,4 | OK | OK |
| | B4 | M20 8.8 - 1 | CO11(25) | 124,8 | 9,0 | 196,8 | 88,4 | 9,6 | 72,7 | OK | OK |
| 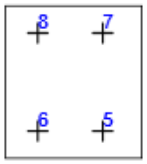 | B5 | M16 8.8 - 2 | CO11(24) | 30,9 | 23,6 | 47,7 | 34,1 | 49,5 | 63,5 | OK | OK |
| | B6 | M16 8.8 - 2 | CO11(11) | 2,7 | 17,5 | 80,6 | 3,0 | 28,9 | 31,1 | OK | OK |
| | B7 | M16 8.8 - 2 | CO11(23) | 34,5 | 20,9 | 66,3 | 38,2 | 34,7 | 62,0 | OK | OK |
| | B8 | M16 8.8 - 2 | CO11(33) | 3,6 | 19,8 | 83,1 | 4,0 | 32,9 | 35,8 | OK | OK |

**Bemessungsdaten**

| Klasse | $F_{t,Rd}$ [kN] | $B_{p,Rd}$ [kN] | $F_{v,Rd}$ [kN] |
|---|---|---|---|
| M20 8.8 - 1 | 141,1 | 469,4 | 94,1 |
| M16 8.8 - 2 | 90,4 | 99,4 | 60,3 |

**Erläuterung von Symbolen**

| | |
|---|---|
| $F_{t,Ed}$ | Zugkraft |
| $F_{v,Ed}$ | Resultierende der Schraubenscherkräfte Vy und Vz in Scherebenen |
| $F_{b,Rd}$ | Lochleibungstragfähigkeit der Platte nach EN 1993-1-8 Tab. 3.4 |
| $Ut_t$ | Ausnutzung unter Zug |
| $Ut_s$ | Ausnutzung unter Schub |
| $Ut_{ts}$ | Interaktion von Zug und Schub EN_1993-1-8 Tabelle 3.4 |
| $F_{t,Rd}$ | Zugtragfähigkeit der Schraube nach EN 1993-1-8 Tabelle 3.4 |
| $B_{p,Rd}$ | Durchstanztragfähigkeit nach EN 1993-1-8 Tabelle 3.4 |
| $F_{v,Rd}$ | Schertragfähigkeit der Schraube nach EN 1993-1-8 Tabelle 3.4 |

## Schweißnähte

| Position | Kante | $T_w$ [mm] | L [mm] | Lasten | $\sigma_{w,Ed}$ [MPa] | $\varepsilon_{Pl}$ [%] | $\sigma_{\perp}$ [MPa] | $\tau_{\perp}$ [MPa] | $\tau_{\parallel}$ [MPa] | Ut [%] | $Ut_c$ [%] | Konstruktionsregeln | Status |
|---|---|---|---|---|---|---|---|---|---|---|---|---|---|
| Verschobene Stirnplatte1a | 63-tfl 1 | ◢ 6,0 ◣ | 241 | CO11(25) | 427,6 | 0,4 | -223,1 | -203,2 | 55,2 | 98,2 | 68,7 | OK | OK |
| | | ◢ 6,0 ◣ | 240 | CO11(25) | 432,4 | 3,2 | -287,6 | -184,7 | 25,4 | 99,3 | 95,3 | OK | OK |
| Verschobene Stirnplatte1a | 63-bfl 1 | ◢ 6,0 ◣ | 240 | CO11(25) | 432,3 | 3,1 | -287,0 | 184,8 | -26,0 | 99,2 | 95,2 | OK | OK |
| | | ◢ 6,0 ◣ | 241 | CO11(25) | 427,6 | 0,4 | -220,1 | 203,6 | -57,9 | 98,2 | 68,0 | OK | OK |
| Verschobene Stirnplatte1b | 142-bfl 1 | ◢ 6,0 ◣ | 120 | CO11(25) | 423,6 | 0,0 | 65,2 | 105,0 | 217,7 | 97,3 | 66,2 | OK | OK |
| | | ◢ 6,0 ◣ | 120 | CO11(25) | 427,2 | 0,2 | 322,4 | 102,5 | -125,3 | 98,1 | 73,5 | OK | OK |
| Verschobene Stirnplatte1b | 142-tfl 1 | ◢ 6,0 ◣ | 119 | CO11(25) | 430,6 | 2,2 | -172,1 | -158,3 | 164,0 | 98,9 | 91,2 | OK | OK |
| | | ◢ 6,0 ◣ | 119 | CO11(25) | 430,0 | 1,8 | -148,8 | 164,7 | -164,7 | 98,7 | 90,9 | OK | OK |
| Verschobene Stirnplatte1b | 142-w 1 | ◢ 6,0 ◣ | 225 | CO11(25) | 198,5 | 0,0 | 98,9 | -99,3 | 1,6 | 45,6 | 29,9 | OK | OK |
| | | ◢ 6,0 ◣ | 225 | CO11(25) | 197,8 | 0,0 | 99,2 | 98,8 | -0,1 | 45,4 | 29,7 | OK | OK |
| 63-bfl 1 | STEIFF | ◢ 6,0 ◣ | 101 | CO11(25) | 159,2 | 0,0 | -111,4 | 46,4 | -46,5 | 36,6 | 29,5 | OK | OK |
| | | ◢ 6,0 ◣ | 101 | CO11(25) | 173,2 | 0,0 | 113,1 | 44,8 | -61,1 | 39,8 | 32,7 | OK | OK |
| 63-w 1 | STEIFF | ◢ 6,0 ◣ | 177 | CO11(23) | 63,1 | 0,0 | 7,0 | 7,4 | -35,4 | 14,5 | 9,5 | OK | OK |
| | | ◢ 6,0 ◣ | 177 | CO11(29) | 147,9 | 0,0 | 16,6 | -13,3 | 83,8 | 34,0 | 23,3 | OK | OK |
| 63-tfl 1 | STEIFF | ◢ 6,0 ◣ | 101 | CO11(25) | 153,4 | 0,0 | -110,8 | 45,7 | 40,8 | 35,2 | 28,9 | OK | OK |
| | | ◢ 6,0 ◣ | 101 | CO11(25) | 169,5 | 0,0 | 111,0 | 45,4 | 58,4 | 38,9 | 31,5 | OK | OK |
| Verschobene Stirnplatte1a | STEIFF | ◢ 6,0 ◣ | 223 | CO11(25) | 426,9 | 0,0 | 140,5 | 68,0 | -222,6 | 98,0 | 71,2 | OK | OK |
| | | ◢ 6,0 ◣ | 223 | CO11(25) | 355,6 | 0,0 | -108,7 | 21,0 | -194,3 | 81,6 | 56,0 | OK | OK |
| 63-bfl 1 | Fahnenblech1 | ◢ 6,0 ◣ | 139 | CO11(23) | 225,4 | 0,0 | -39,7 | -93,8 | 87,2 | 51,8 | 40,9 | OK | OK |

| Position | Kante | $T_w$ [mm] | L [mm] | Lasten | $\sigma_{w,Ed}$ [MPa] | $\varepsilon_{Pl}$ [%] | $\sigma_{\perp}$ [MPa] | $\tau_{\perp}$ [MPa] | $\tau_{\parallel}$ [MPa] | Ut [%] | $Ut_c$ [%] | Konstruktionsregeln | Status |
|---|---|---|---|---|---|---|---|---|---|---|---|---|---|
| | | ◢ 6,0 ◣ | 138 | CO11(24) | 192,4 | 0,0 | 76,5 | -89,3 | -49,1 | 44,2 | 29,7 | OK | OK |
| 63-bfl 1 | Rippe1a | ◢ 6,0 ◣ | 101 | CO11(29) | 54,1 | 0,0 | 21,9 | 19,1 | 21,2 | 12,4 | 9,9 | OK | OK |
| | | ◢ 6,0 ◣ | 101 | CO11(12) | 49,3 | 0,0 | 13,2 | -15,0 | -23,0 | 11,3 | 8,9 | OK | OK |
| 63-w 1 | Rippe1a | ◢ 6,0 ◣ | 177 | CO11(24) | 42,3 | 0,0 | -9,3 | -8,4 | 22,3 | 9,7 | 7,2 | OK | OK |
| | | ◢ 6,0 ◣ | 177 | CO11(24) | 42,2 | 0,0 | -4,1 | 5,1 | -23,7 | 9,7 | 7,0 | OK | OK |
| 63-tfl 1 | Rippe1a | ◢ 6,0 ◣ | 101 | CO11(12) | 53,7 | 0,0 | 15,8 | 14,9 | -25,6 | 12,3 | 8,1 | OK | OK |
| | | ◢ 6,0 ◣ | 101 | CO11(12) | 56,0 | 0,0 | 19,5 | -20,3 | 22,5 | 12,9 | 8,8 | OK | OK |
| 63-bfl 1 | Rippe1b | ◢ 6,0 ◣ | 101 | CO9(26) | 35,4 | 0,0 | 14,0 | 14,2 | 12,3 | 8,1 | 7,8 | OK | OK |
| | | ◢ 6,0 ◣ | 101 | CO11(24) | 34,6 | 0,0 | -11,3 | 8,6 | 16,8 | 8,0 | 7,1 | OK | OK |
| 63-w 1 | Rippe1b | ◢ 6,0 ◣ | 177 | CO11(12) | 52,2 | 0,0 | 3,8 | 3,9 | -29,8 | 12,0 | 8,5 | OK | OK |
| | | ◢ 6,0 ◣ | 177 | CO11(12) | 48,6 | 0,0 | 7,7 | -8,7 | -26,3 | 11,2 | 8,4 | OK | OK |
| 63-tfl 1 | Rippe1b | ◢ 6,0 ◣ | 101 | CO11(12) | 26,6 | 0,0 | 2,3 | -0,4 | -15,3 | 6,1 | 6,1 | OK | OK |
| | | ◢ 6,0 ◣ | 100 | CO11(25) | 20,6 | 0,0 | -3,9 | 3,3 | -11,2 | 4,7 | 4,7 | OK | OK |

**Bemessungsdaten**

| Material | $f_u$ [MPa] | $\beta_w$ [-] | $\sigma_{w,Rd}$ [MPa] | 0.9 σ [MPa] |
|---|---|---|---|---|
| S 355 | 490,0 | 0,90 | 435,6 | 352,8 |

**Erläuterung von Symbolen**

| | |
|---|---|
| $T_w$ | Nahtdicke a |
| L | Länge |
| $\sigma_{w,Ed}$ | Vergleichsspannung |
| $\varepsilon_{Pl}$ | Dehnung |
| $\sigma_{\perp}$ | Senkrechte Spannung |
| $\tau_{\perp}$ | Scherspannung senkrecht zur Schweißnahtachse |
| $\tau_{\parallel}$ | Scherspannung parallel zur Schweißnahtachse |
| Ut | Ausnutzung |
| $Ut_c$ | Schätzung der Schweißnahtkapazität |
| ◢ | Kehlnaht |
| $f_u$ | Grenzfestigkeit der Schweißnaht |
| $\beta_w$ | Korrelationsfaktor nach EN 1993-1-8 Tab. 4.1 |
| $\sigma_{w,Rd}$ | Tragfähigkeit der Schweißnaht |
| 0.9 σ | Senkrechter Spannungswiderstand - 0.9*fu / γM2 |

### Beulen

**Die Beulanalyse wurde nicht berechnet.**

## Normeinstellungen

| Position | Wert | Einheit | Bezug |
|---|---|---|---|
| Sicherheitsfaktor $\gamma_{M0}$ | 1,00 | - | EN 1993-1-1 – 6.1 |
| Sicherheitsfaktor $\gamma_{M1}$ | 1,00 | - | EN 1993-1-1 – 6.1 |
| Sicherheitsfaktor $\gamma_{M2}$ | 1,25 | - | EN 1993-1-1 – 6.1 |
| Sicherheitsfaktor $\gamma_{M3}$ | 1,25 | - | EN 1993-1-8 – Table 2.1 |
| Sicherheitsfaktor $\gamma_C$ | 1,50 | - | EN 1992-1-1 – 2.4.2.4 |
| Sicherheitsfaktor $\gamma_{Inst}$ | 1,20 | - | EN 1992-4 – Table 4.1 |
| Verbindungskoeffizient βj | 0,67 | - | EN 1993-1-8 – 6.2.5(7) |
| Wirksame Fläche - Einfluss der Netzgröße | 0,10 | - | |
| Reibungsbeiwert - Beton | 0,25 | - | EN 1993-1-8 |
| Reibungskoeffizient bei gleitfesten Verbindungen | 0,30 | - | EN 1993-1-8 – Table 3.7 |
| Plastische Dehnung - Grenzwert | 0,05 | - | EN 1993-1-5 |
| Konstruktionsregeln | Ja | | |
| Distance between bolts [d0] | 2,20 | - | EN 1993-1-8 – Table 3.3 |
| Distance between bolts and edge [d0] | 1,20 | - | EN 1993-1-8 – Table 3.3 |
| Nachweis der Tragfähigkeit bei Betonausbruch | Beide | | |
| Berechnetes αb für Lochleibungsnachweis anwenden. | Ja | | EN 1993-1-8 – Table 3.4 |
| Gerissener Beton | Ja | | EN 1992-4 |
| Überprüfen der lokalen Verformung | Ja | | |
| Lokale Verformung - Grenzwert | 0,03 | - | CIDECT DG 1, 3 – 1.1 |
| Geometrische Nichtlinearität (GMNA) | Ja | | Analyse mit großen Verformungen für Verbindungen mit Hohlprofilen |
| Ausgesteiftes System | Nein | | EN 1993-1-8 – 5.2.2.5 |

# DETAJLI NA OKVIRJU O3- Os Gj-4,3,2

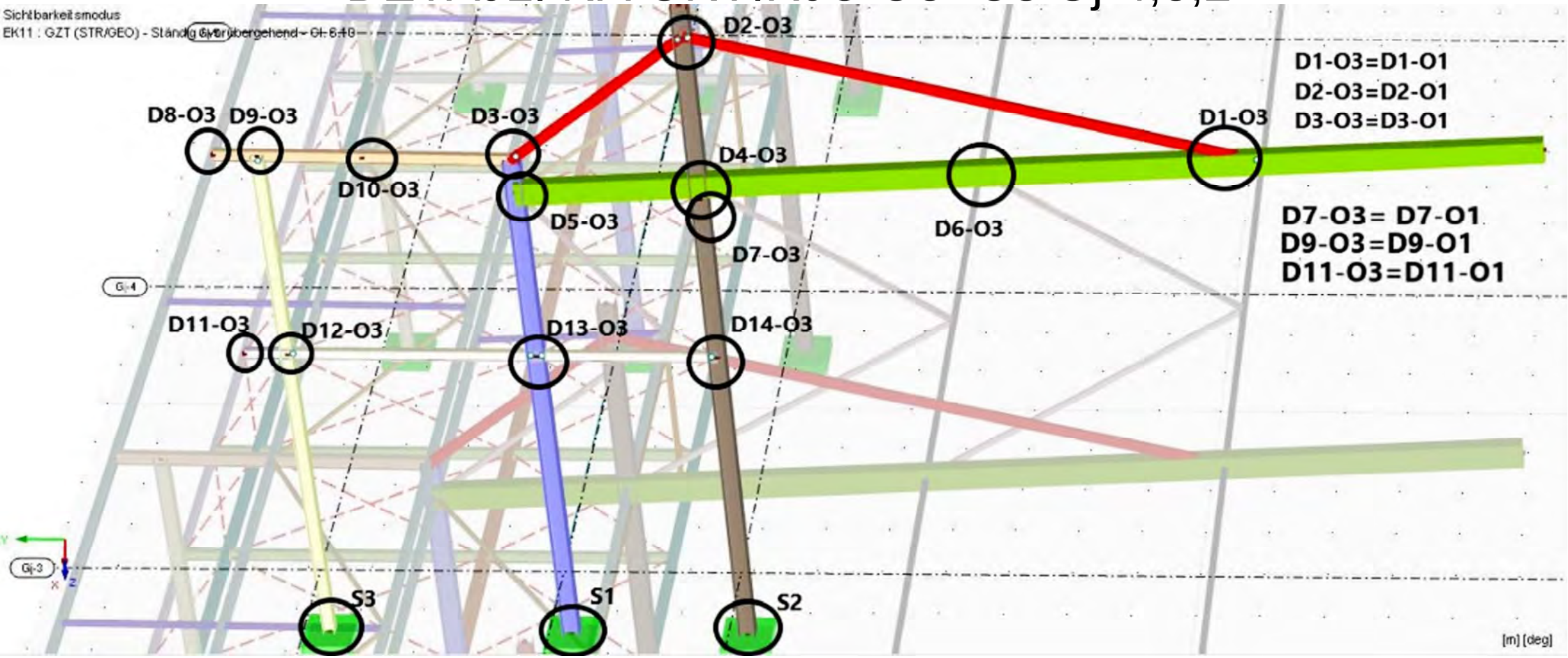

| | |
|---|---|
| **Projekt:** | **IdeaStatiCa-Stadion_Fazanerija_JK-6_BR - 271** |
| **Projektnummer:** | **Detajl D3-O3** |
| **Autor:** | **mag. Igor Gorup dipl.ing.** |

## Projektdaten

| | |
|---|---|
| Projektname | IdeaStatiCa-Stadion_Fazanerija_JK-6_BR - 271 |
| Projektnummer | Detajl D3-O3 |
| Autor | mag. Igor Gorup dipl.ing. |
| Beschreibung | |
| Datum | 18.06.2025 |
| Norm | EN |

## Material

| | |
|---|---|
| Stahl | Baustahl S 355, S 355 |

# Projektposition 271

## Bemessung

| | |
|---|---|
| Name | 271 |
| Beschreibung | |
| Berechnung | Spannung, Dehnung/ Lasten im Gleichgewicht |

### Bauteile

#### Geometrie

| Name | Querschnitt | β – Rotation [°] | Y - Rotation [°] | α - Rotation [°] | Abstand ex [mm] | Abstand ey [mm] | Abstand ez [mm] |
|---|---|---|---|---|---|---|---|
| 271 | 334 - CHS168.3/6.3 | -90,0 | -39,9 | -180,0 | 0 | 0 | 150 |
| 95 | 6 - IPE200 | -90,0 | 0,8 | -180,0 | 0 | 0 | 0 |
| 341 | 266 - HEB260 | 48,8 | 90,0 | -138,8 | 120 | 0 | 0 |
| 105 | 6 - IPE200 | 0,0 | 0,0 | -180,0 | 0 | 0 | 0 |
| 171 | 18 - IPE200 | 0,0 | 0,0 | -180,0 | 0 | 0 | 0 |

#### Auflager und Kräfte

| Name | Auflager | Kräfte in | X [mm] |
|---|---|---|---|
| 271 / ende | Mx-My-Mz | Schrauben | 0 |
| 95 / ende | | Position | 0 |
| 341 / anfang | N-Vy-Vz-Mx-My-Mz | Position | 0 |
| 105 / anfang | | Position | 0 |
| 171 / ende | | Position | 0 |

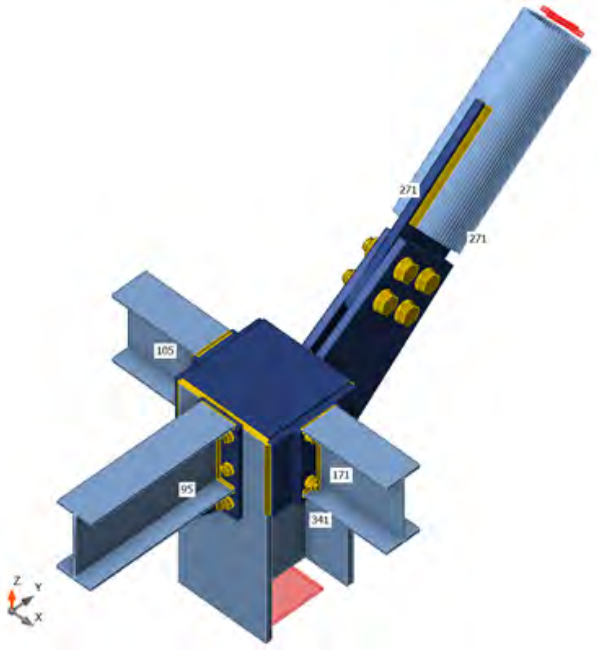


### Querschnitte

| Name | Material |
|---|---|
| 334 - CHS168.3/6.3 | Baustahl S 355 |
| 6 - IPE200 | Baustahl S 355 |
| 266 - HEB260 | Baustahl S 355 |
| 18 - IPE200 | Baustahl S 355 |

## Schrauben

| Name | Durchmesser [mm] | $f_y$ [MPa] | $f_u$ [MPa] | Bruttofläche [$mm^2$] |
|---|---|---|---|---|
| M16 8.8 | 16 | 640,0 | 800,0 | 201 |
| M30 8.8 | 30 | 640,0 | 800,0 | 707 |

## Lasteinwirkungen (Kräfte im Gleichgewicht)

| Name | Bauteil | N [kN] | Vy [kN] | Vz [kN] | Mx [kNm] | My [kNm] | Mz [kNm] |
|---|---|---|---|---|---|---|---|
| CO11(43) | 271 / Anfang | 177,2 | 0,0 | 0,4 | 0,0 | 0,0 | 0,0 |
| | 95 / Ende | 0,9 | 0,0 | -0,9 | 0,0 | 8,1 | 0,0 |
| | 341 / Anfang | 116,7 | 1,7 | 136,9 | 0,0 | 8,1 | -2,8 |
| | 105 / Anfang | 7,6 | 0,0 | 1,7 | 0,0 | 1,2 | 0,0 |
| | 171 / Ende | -9,3 | 0,0 | 2,4 | 0,0 | -4,0 | 0,0 |
| CO9(44) | 271 / Anfang | -10,2 | 0,0 | 0,0 | 0,0 | 0,0 | 0,0 |
| | 95 / Ende | 11,4 | 0,4 | 0,8 | 0,0 | -3,1 | 0,2 |
| | 341 / Anfang | -6,2 | -14,0 | 2,7 | 0,1 | -3,1 | 13,3 |
| | 105 / Anfang | -15,1 | 0,0 | 1,7 | 0,0 | 6,4 | -0,1 |
| | 171 / Ende | 28,9 | 0,0 | -2,0 | 0,0 | 6,9 | 0,0 |
| CO11(45) | 271 / Anfang | -37,2 | 0,0 | 0,4 | 0,0 | 0,0 | 0,0 |
| | 95 / Ende | 16,4 | 0,0 | 8,4 | 0,0 | -6,6 | 0,0 |
| | 341 / Anfang | -2,1 | -6,7 | -12,4 | 0,0 | -6,6 | 5,7 |
| | 105 / Anfang | -2,6 | 0,0 | 7,4 | 0,0 | 10,8 | 0,0 |
| | 171 / Ende | 9,3 | 0,0 | 5,8 | 0,0 | -5,1 | 0,1 |
| CO11(46) | 271 / Anfang | -599,3 | 0,0 | 0,3 | 0,0 | 0,0 | 0,0 |
| | 95 / Ende | -13,0 | 0,0 | 27,2 | 0,0 | -43,8 | 0,0 |
| | 341 / Anfang | -332,3 | -7,5 | -470,6 | 0,0 | -43,9 | 1,5 |
| | 105 / Anfang | 10,7 | -0,1 | 13,9 | 0,0 | 17,1 | 0,1 |
| | 171 / Ende | -2,9 | -0,1 | 13,4 | 0,0 | -15,6 | -0,2 |
| CO11(47) | 271 / Anfang | -681,7 | 0,0 | 0,3 | 0,0 | 0,0 | 0,0 |
| | 95 / Ende | -12,8 | 0,0 | 18,3 | 0,0 | -37,0 | 0,0 |
| | 341 / Anfang | -406,6 | -7,9 | -532,9 | 0,0 | -37,0 | 1,5 |
| | 105 / Anfang | 9,6 | -0,1 | 8,1 | 0,0 | 10,2 | 0,1 |
| | 171 / Ende | -1,5 | -0,1 | 7,6 | 0,0 | -8,7 | -0,1 |
| CO11(48) | 271 / Anfang | -483,7 | 0,0 | 0,3 | 0,0 | 0,0 | 0,0 |
| | 95 / Ende | -18,5 | 0,0 | 15,5 | 0,0 | -30,0 | 0,0 |
| | 341 / Anfang | -282,9 | -5,2 | -388,0 | 0,0 | -30,1 | 0,4 |
| | 105 / Anfang | 7,2 | -0,1 | 6,8 | 0,0 | 8,3 | 0,1 |
| | 171 / Ende | -1,8 | -0,1 | 6,7 | 0,0 | -7,9 | -0,1 |
| CO11(49) | 271 / Anfang | 177,3 | 0,0 | 0,4 | 0,0 | 0,0 | 0,0 |
| | 95 / Ende | 1,5 | 0,1 | -0,9 | 0,0 | 8,2 | 0,0 |
| | 341 / Anfang | 116,7 | 0,3 | 137,5 | 0,0 | 8,2 | -1,7 |
| | 105 / Anfang | 8,0 | 0,0 | 1,8 | 0,0 | 1,7 | 0,0 |
| | 171 / Ende | -8,3 | 0,0 | 2,3 | 0,0 | -3,4 | 0,0 |
| CO11(50) | 271 / Anfang | -601,3 | 0,0 | 0,3 | 0,0 | 0,0 | 0,0 |
| | 95 / Ende | 2,4 | -0,1 | 27,3 | 0,0 | -43,9 | -0,1 |
| | 341 / Anfang | -333,8 | -13,3 | -456,7 | 0,0 | -43,9 | 9,2 |
| | 105 / Anfang | -2,4 | -0,1 | 14,9 | 0,0 | 20,8 | 0,1 |
| | 171 / Ende | 15,5 | -0,1 | 12,2 | 0,0 | -11,5 | 0,0 |
| CO11(51) | 271 / Anfang | -35,2 | 0,0 | 0,4 | 0,0 | 0,0 | 0,0 |
| | 95 / Ende | 2,7 | 0,1 | 8,4 | 0,0 | -6,5 | 0,0 |
| | 341 / Anfang | -0,5 | -3,4 | -24,5 | 0,0 | -6,5 | 0,1 |
| | 105 / Anfang | 10,1 | 0,0 | 6,7 | 0,0 | 8,1 | 0,0 |
| | 171 / Ende | -6,7 | 0,0 | 6,6 | 0,0 | -8,1 | 0,0 |
| CO11(52) | 271 / Anfang | -278,0 | 0,0 | 0,3 | 0,0 | 0,0 | 0,0 |
| | 95 / Ende | -4,6 | -0,1 | 13,6 | 0,0 | -22,6 | 0,0 |
| | 341 / Anfang | -151,8 | -7,0 | -217,4 | 0,0 | -22,6 | 5,7 |
| | 105 / Anfang | -6,4 | 0,0 | 7,5 | 0,0 | 10,8 | 0,1 |
| | 171 / Ende | 13,3 | 0,0 | 5,9 | 0,0 | -5,1 | 0,0 |
| CO11(31) | 271 / Anfang | -512,9 | 0,0 | 0,4 | 0,0 | 0,0 | 0,0 |
| | 95 / Ende | -3,6 | 0,1 | 24,1 | 0,0 | -37,0 | 0,1 |
| | 341 / Anfang | -281,2 | -9,8 | -395,7 | 0,0 | -37,0 | 3,6 |

| Name | Bauteil | N [kN] | Vy [kN] | Vz [kN] | Mx [kNm] | My [kNm] | Mz [kNm] |
|---|---|---|---|---|---|---|---|
| | 105 / Anfang | 12,4 | -0,1 | 13,1 | 0,0 | 16,9 | 0,1 |
| | 171 / Ende | -2,4 | -0,1 | 12,1 | 0,0 | -13,3 | -0,1 |
| CO11(33) | 271 / Anfang | -483,7 | 0,0 | 0,3 | 0,0 | 0,0 | 0,0 |
| | 95 / Ende | -19,1 | 0,0 | 15,4 | 0,0 | -30,0 | 0,0 |
| | 341 / Anfang | -282,9 | -3,8 | -388,5 | 0,0 | -30,1 | -0,7 |
| | 105 / Anfang | 6,9 | -0,1 | 6,7 | 0,0 | 7,8 | 0,1 |
| | 171 / Ende | -3,0 | -0,1 | 6,9 | 0,0 | -8,5 | -0,1 |
| CO11(34) | 271 / Anfang | -37,1 | 0,0 | 0,4 | 0,0 | 0,0 | 0,0 |
| | 95 / Ende | 17,0 | 0,0 | 8,4 | 0,0 | -6,5 | 0,0 |
| | 341 / Anfang | -2,1 | -8,2 | -11,7 | 0,0 | -6,5 | 6,8 |
| | 105 / Anfang | -2,2 | 0,0 | 7,6 | 0,0 | 11,4 | 0,0 |
| | 171 / Ende | 10,4 | 0,0 | 5,6 | 0,0 | -4,5 | 0,1 |
| CO11(36) | 271 / Anfang | -597,3 | 0,0 | 0,3 | 0,0 | 0,0 | 0,0 |
| | 95 / Ende | 12,0 | 0,0 | 15,3 | 0,0 | -30,2 | 0,0 |
| | 341 / Anfang | -356,8 | -15,8 | -444,2 | 0,1 | -30,3 | 11,5 |
| | 105 / Anfang | -2,0 | 0,0 | 8,4 | 0,0 | 13,8 | 0,0 |
| | 171 / Ende | 17,6 | 0,0 | 5,1 | 0,0 | -2,3 | 0,0 |
| CO11(38) | 271 / Anfang | 128,7 | 0,0 | 0,5 | 0,0 | 0,0 | 0,0 |
| | 95 / Ende | 16,1 | 0,0 | 2,0 | 0,0 | 4,2 | 0,0 |
| | 341 / Anfang | 91,9 | -6,2 | 114,8 | 0,0 | 4,2 | 5,9 |
| | 105 / Anfang | -3,0 | 0,0 | 4,6 | 0,0 | 7,4 | -0,1 |
| | 171 / Ende | 9,2 | 0,0 | 2,9 | 0,0 | -1,6 | 0,1 |
| CO11(40) | 271 / Anfang | -275,9 | 0,0 | 0,3 | 0,0 | 0,0 | 0,0 |
| | 95 / Ende | -19,1 | 0,0 | 13,5 | 0,0 | -22,6 | 0,0 |
| | 341 / Anfang | -150,2 | -2,0 | -230,3 | 0,0 | -22,6 | -1,3 |
| | 105 / Anfang | 6,1 | 0,0 | 6,6 | 0,0 | 7,5 | 0,1 |
| | 171 / Ende | -4,0 | 0,0 | 6,9 | 0,0 | -8,8 | -0,1 |
| CO11(41) | 271 / Anfang | -601,3 | 0,0 | 0,3 | 0,0 | 0,0 | 0,0 |
| | 95 / Ende | 3,0 | 0,0 | 27,3 | 0,0 | -43,8 | -0,1 |
| | 341 / Anfang | -333,8 | -14,7 | -456,1 | 0,0 | -43,9 | 10,5 |
| | 105 / Anfang | -2,2 | -0,1 | 15,0 | 0,0 | 21,4 | 0,1 |
| | 171 / Ende | 16,7 | -0,1 | 12,0 | 0,0 | -10,8 | 0,0 |
| CO11(23) | 271 / Anfang | -683,8 | 0,0 | 0,3 | 0,0 | 0,0 | 0,0 |
| | 95 / Ende | 3,5 | 0,0 | 18,4 | 0,0 | -37,0 | -0,1 |
| | 341 / Anfang | -408,1 | -15,2 | -518,2 | 0,1 | -37,1 | 10,7 |
| | 105 / Anfang | -3,5 | -0,1 | 9,3 | 0,0 | 14,6 | 0,1 |
| | 171 / Ende | 18,4 | 0,0 | 6,2 | 0,0 | -3,9 | 0,0 |
| CO11(27) | 271 / Anfang | 175,3 | 0,0 | 0,4 | 0,0 | 0,0 | 0,0 |
| | 95 / Ende | 15,3 | 0,0 | -1,0 | 0,0 | 8,2 | 0,0 |
| | 341 / Anfang | 115,1 | -4,3 | 149,8 | 0,0 | 8,2 | 4,6 |
| | 105 / Anfang | -3,9 | 0,0 | 2,6 | 0,0 | 4,7 | 0,0 |
| | 171 / Ende | 8,2 | 0,0 | 1,3 | 0,0 | -0,1 | 0,0 |
| CO11(29) | 271 / Anfang | 175,2 | 0,0 | 0,4 | 0,0 | 0,0 | 0,0 |
| | 95 / Ende | 14,7 | 0,0 | -1,0 | 0,0 | 8,1 | 0,0 |
| | 341 / Anfang | 115,0 | -2,8 | 149,2 | 0,0 | 8,1 | 3,5 |
| | 105 / Anfang | -4,3 | 0,0 | 2,5 | 0,0 | 4,2 | 0,0 |
| | 171 / Ende | 7,2 | 0,0 | 1,5 | 0,0 | -0,7 | 0,1 |
| CO11(9) | 271 / Anfang | -442,5 | 0,0 | 0,3 | 0,0 | 0,0 | 0,0 |
| | 95 / Ende | -19,2 | 0,0 | 19,9 | 0,0 | -33,4 | 0,0 |
| | 341 / Anfang | -245,9 | -3,6 | -357,4 | 0,0 | -33,5 | -0,8 |
| | 105 / Anfang | 7,5 | -0,1 | 9,6 | 0,0 | 11,2 | 0,1 |
| | 171 / Ende | -3,7 | -0,1 | 9,7 | 0,0 | -12,0 | -0,1 |
| CO11(10) | 271 / Anfang | -78,0 | 0,0 | 0,4 | 0,0 | 0,0 | 0,0 |
| | 95 / Ende | 17,1 | 0,0 | 3,9 | 0,0 | -3,1 | 0,0 |

| Name | Bauteil | N [kN] | Vy [kN] | Vz [kN] | Mx [kNm] | My [kNm] | Mz [kNm] |
|---|---|---|---|---|---|---|---|
| | 341 / Anfang | -38,6 | -8,5 | -43,0 | 0,0 | -3,1 | 7,0 |
| | 105 / Anfang | -2,9 | 0,0 | 4,7 | 0,0 | 8,0 | 0,0 |
| | 171 / Ende | 11,3 | 0,0 | 2,7 | 0,0 | -1,0 | 0,1 |
| CO11(12) | 271 / Anfang | -444,7 | 0,0 | 0,3 | 0,0 | 0,0 | 0,0 |
| | 95 / Ende | -4,2 | -0,1 | 20,0 | 0,0 | -33,5 | -0,1 |
| | 341 / Anfang | -247,5 | -8,9 | -344,1 | 0,0 | -33,5 | 6,6 |
| | 105 / Anfang | -5,4 | -0,1 | 10,5 | 0,0 | 14,7 | 0,1 |
| | 171 / Ende | 14,1 | 0,0 | 8,6 | 0,0 | -8,1 | 0,0 |
| CO11(15) | 271 / Anfang | -489,7 | 0,0 | 0,4 | 0,0 | 0,0 | 0,0 |
| | 95 / Ende | -18,7 | 0,0 | 22,8 | 0,0 | -37,5 | 0,0 |
| | 341 / Anfang | -270,0 | -5,5 | -392,9 | 0,0 | -37,5 | 0,3 |
| | 105 / Anfang | 8,4 | -0,1 | 11,5 | 0,0 | 13,9 | 0,1 |
| | 171 / Ende | -2,8 | -0,1 | 11,3 | 0,0 | -13,5 | -0,1 |
| CO11(18) | 271 / Anfang | -485,8 | 0,0 | 0,3 | 0,0 | 0,0 | 0,0 |
| | 95 / Ende | -4,0 | -0,1 | 15,5 | 0,0 | -30,1 | -0,1 |
| | 341 / Anfang | -284,5 | -9,2 | -375,1 | 0,0 | -30,1 | 6,7 |
| | 105 / Anfang | -6,0 | -0,1 | 7,7 | 0,0 | 11,3 | 0,1 |
| | 171 / Ende | 14,9 | 0,0 | 5,7 | 0,0 | -4,6 | 0,0 |
| CO11(19) | 271 / Anfang | -599,3 | 0,0 | 0,3 | 0,0 | 0,0 | 0,0 |
| | 95 / Ende | -12,4 | 0,1 | 27,2 | 0,0 | -43,8 | 0,0 |
| | 341 / Anfang | -332,3 | -9,0 | -470,0 | 0,0 | -43,8 | 2,7 |
| | 105 / Anfang | 11,0 | -0,1 | 14,0 | 0,0 | 17,6 | 0,1 |
| | 171 / Ende | -1,7 | -0,1 | 13,2 | 0,0 | -15,0 | -0,2 |
| CO11(21) | 271 / Anfang | -327,9 | 0,0 | 0,4 | 0,0 | 0,0 | 0,0 |
| | 95 / Ende | 14,7 | 0,0 | 18,6 | 0,0 | -25,2 | 0,0 |
| | 341 / Anfang | -170,8 | -10,7 | -236,4 | 0,0 | -25,2 | 8,0 |
| | 105 / Anfang | -1,5 | 0,0 | 11,9 | 0,0 | 16,8 | 0,0 |
| | 171 / Ende | 12,1 | 0,0 | 9,6 | 0,0 | -8,8 | 0,0 |
| CO11(4) | 271 / Anfang | -389,1 | 0,0 | 0,4 | 0,0 | 0,0 | 0,0 |
| | 95 / Ende | 11,4 | 0,0 | 13,3 | 0,0 | -22,8 | 0,0 |
| | 341 / Anfang | -223,7 | -14,2 | -286,4 | 0,0 | -22,8 | 10,8 |
| | 105 / Anfang | -1,9 | 0,0 | 8,3 | 0,0 | 13,5 | 0,0 |
| | 171 / Ende | 16,1 | 0,0 | 5,2 | 0,0 | -2,6 | 0,0 |
| CO11(5) | 271 / Anfang | 130,6 | 0,0 | 0,5 | 0,0 | 0,0 | 0,0 |
| | 95 / Ende | 2,2 | 0,1 | 2,0 | 0,0 | 4,2 | 0,1 |
| | 341 / Anfang | 93,4 | -1,6 | 102,3 | 0,0 | 4,2 | -0,6 |
| | 105 / Anfang | 9,0 | 0,0 | 3,7 | 0,0 | 4,4 | 0,0 |
| | 171 / Ende | -7,3 | 0,0 | 3,9 | 0,0 | -5,0 | 0,0 |

### Fehlende Lasten

| Name | X [kN] | Y [kN] | Z [kN] | Mx [kNm] | My [kNm] | Mz [kNm] |
|---|---|---|---|---|---|---|
| CO11(43) | 0,0 | 0,3 | -0,4 | -43,0 | 0,2 | 0,0 |
| CO9(44) | -0,6 | -0,9 | 0,0 | 1,2 | -1,7 | 0,0 |
| CO11(45) | 0,0 | 0,0 | 0,0 | 7,1 | -0,8 | 0,0 |
| CO11(46) | 0,2 | 2,1 | -2,7 | 146,4 | -0,9 | 0,0 |
| CO11(47) | 0,2 | 3,0 | -3,7 | 166,2 | -0,9 | 0,0 |
| CO11(48) | 0,1 | 1,6 | -2,0 | 119,1 | -0,6 | 0,0 |
| CO11(49) | 0,0 | 0,3 | -0,4 | -43,1 | 0,0 | 0,0 |
| CO11(50) | -0,2 | 2,1 | -2,6 | 145,0 | -1,6 | 0,0 |
| CO11(51) | 0,0 | 0,0 | 0,0 | 8,2 | -0,4 | 0,0 |
| CO11(52) | -0,1 | 0,5 | -0,7 | 67,8 | -0,8 | 0,0 |
| CO11(31) | 0,1 | 1,4 | -1,8 | 124,4 | -1,2 | 0,0 |
| CO11(33) | 0,1 | 1,6 | -2,1 | 119,2 | -0,4 | 0,0 |
| CO11(34) | 0,0 | 0,0 | 0,0 | 7,0 | -1,0 | 0,0 |
| CO11(36) | -0,2 | 2,0 | -2,5 | 142,9 | -1,9 | 0,0 |
| CO11(38) | 0,0 | 0,2 | -0,3 | -33,1 | -0,8 | 0,0 |
| CO11(40) | 0,1 | 0,5 | -0,7 | 69,0 | -0,2 | 0,0 |
| CO11(41) | -0,2 | 2,1 | -2,6 | 144,9 | -1,8 | 0,0 |
| CO11(23) | -0,2 | 2,9 | -3,6 | 164,7 | -1,8 | 0,0 |
| CO11(27) | 0,0 | 0,3 | -0,4 | -44,3 | -0,5 | 0,0 |
| CO11(29) | 0,0 | 0,3 | -0,4 | -44,2 | -0,3 | 0,0 |
| CO11(9) | 0,1 | 1,3 | -1,7 | 109,3 | -0,4 | 0,0 |
| CO11(10) | 0,0 | 0,0 | 0,0 | 16,9 | -1,0 | 0,0 |
| CO11(12) | -0,1 | 1,3 | -1,6 | 108,0 | -1,1 | 0,0 |
| CO11(15) | 0,1 | 1,5 | -2,0 | 120,6 | -0,7 | 0,0 |
| CO11(18) | -0,1 | 1,6 | -2,0 | 117,9 | -1,1 | 0,0 |
| CO11(19) | 0,2 | 2,1 | -2,7 | 146,3 | -1,1 | 0,0 |
| CO11(21) | -0,1 | 0,4 | -0,5 | 77,6 | -1,3 | 0,0 |
| CO11(4) | -0,1 | 0,8 | -1,0 | 92,7 | -1,7 | 0,0 |
| CO11(5) | 0,0 | 0,2 | -0,3 | -31,9 | -0,2 | 0,0 |

## Nachweis

### Übersicht

| Name | Wert | Nachweisstatus |
|---|---|---|
| Berechnung | 100,0% | OK |
| Platten | 2,4 < 5,0% | OK |
| Lokale Verformung | 0,2 < 3% | OK |
| Schrauben | 88,9 < 100% | OK |
| Schweißnähte | 99,3 < 100% | OK |
| Beulen | Nicht berechnet | |

## Platten

| Name | Material | $t_p$ [mm] | Lasten | $\sigma_{Ed}$ [MPa] | $\varepsilon_{Pl}$ [%] | $\sigma_{c,Ed}$ [MPa] | Status |
|---|---|---|---|---|---|---|---|
| 271 | Baustahl S 355 | 6,3 | CO11(47) | 360,0 | 2,4 | 0,0 | OK |
| 95-bfl 1 | Baustahl S 355 | 8,5 | CO11(41) | 341,8 | 0,0 | 0,0 | OK |
| 95-tfl 1 | Baustahl S 355 | 8,5 | CO11(46) | 270,5 | 0,0 | 0,0 | OK |
| 95-w 1 | Baustahl S 355 | 5,6 | CO11(41) | 347,5 | 0,0 | 0,0 | OK |
| 341-bfl 1 | Baustahl S 355 | 17,5 | CO11(47) | 355,1 | 0,0 | 88,0 | OK |
| 341-tfl 1 | Baustahl S 355 | 17,5 | CO11(47) | 355,1 | 0,1 | 0,0 | OK |
| 341-w 1 | Baustahl S 355 | 10,0 | CO11(47) | 356,7 | 0,8 | 0,0 | OK |
| 105-bfl 1 | Baustahl S 355 | 8,5 | CO11(41) | 251,5 | 0,0 | 0,0 | OK |
| 105-tfl 1 | Baustahl S 355 | 8,5 | CO11(41) | 285,7 | 0,0 | 0,0 | OK |
| 105-w 1 | Baustahl S 355 | 5,6 | CO11(41) | 207,6 | 0,0 | 0,0 | OK |
| 171-bfl 1 | Baustahl S 355 | 8,5 | CO11(46) | 171,9 | 0,0 | 0,0 | OK |
| 171-tfl 1 | Baustahl S 355 | 8,5 | CO11(46) | 233,9 | 0,0 | 0,0 | OK |
| 171-w 1 | Baustahl S 355 | 5,6 | CO11(46) | 136,3 | 0,0 | 0,0 | OK |
| Steifenblech1 | S 355 | 15,0 | CO11(41) | 118,5 | 0,0 | 0,0 | OK |
| Stirnblech1 | S 355 | 15,0 | CO11(50) | 355,2 | 0,1 | 116,4 | OK |
| Verstärkung1 | S 355 | 10,0 | CO11(41) | 356,1 | 0,5 | 0,0 | OK |
| Verbindungsblech1a | S 355 | 20,0 | CO11(47) | 240,0 | 0,0 | 11,8 | OK |
| Verbindungsblech1b | S 355 | 20,0 | CO11(47) | 239,3 | 0,0 | 12,1 | OK |
| Verbindungsblech1c | S 355 | 20,0 | CO11(47) | 355,3 | 0,2 | 12,3 | OK |
| Verschobene Stirnplatte1a | S 355 | 15,0 | CO11(46) | 356,1 | 0,5 | 65,6 | OK |
| Verschobene Stirnplatte1b | S 355 | 15,0 | CO11(46) | 284,6 | 0,0 | 120,1 | OK |
| Verschobene Stirnplatte2a | S 355 | 15,0 | CO11(41) | 358,6 | 1,7 | 91,2 | OK |
| Verschobene Stirnplatte2b | S 355 | 15,0 | CO11(41) | 355,1 | 0,1 | 178,0 | OK |

**Bemessungsdaten**

| Material | $f_y$ [MPa] | $\varepsilon_{lim}$ [%] |
|---|---|---|
| Baustahl S 355 | 355,0 | 5,0 |
| S 355 | 355,0 | 5,0 |

**Erläuterung von Symbolen**

| | |
|---|---|
| $t_p$ | Plattendicke |
| $\sigma_{Ed}$ | Vergleichsspannung |
| $\varepsilon_{Pl}$ | Plastische Dehnung |
| $\sigma_{c,Ed}$ | Kontaktspannung |
| $f_y$ | Streckgrenze |
| $\varepsilon_{lim}$ | Grenzwert plastische Dehnung |

## Lokale Verformung

| Name | $d_0$ [mm] | Lasten | $\delta$ [mm] | $\delta_{lim}$ [mm] | $\delta/d_0$ [%] | Nachweisstatus |
|---|---|---|---|---|---|---|
| 271 | 168 | CO11(47) | 0 | 5 | 0,2 | OK |

**Erläuterung von Symbolen**

| | |
|---|---|
| $d_0$ | Querschnittsgröße |
| $\delta$ | Lokale Verformung im Querschnitt |
| $\delta_{lim}$ | Zulässige Verformung |

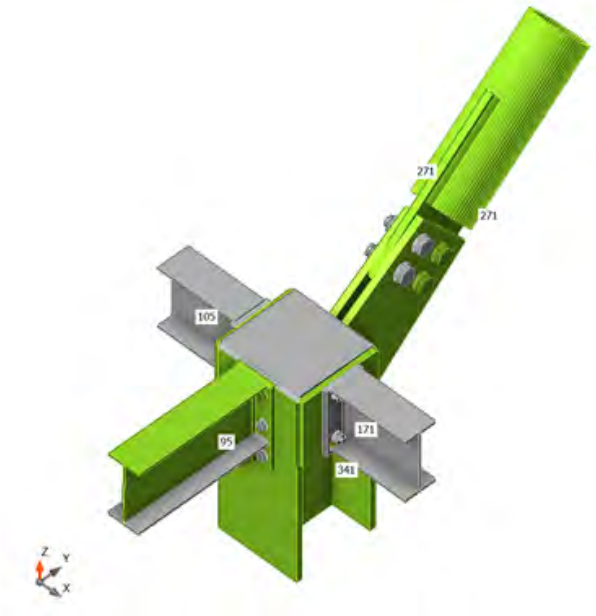


*Gesamt, CO11(47)*

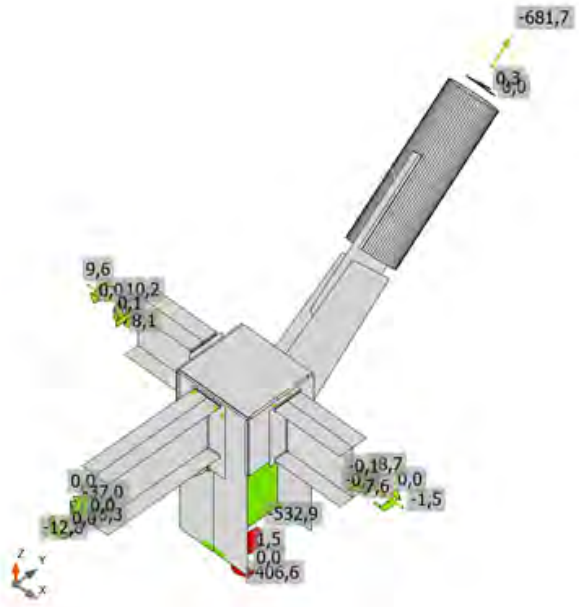


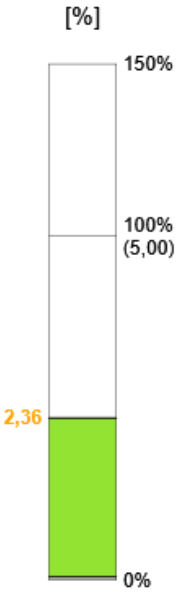


*Dehnung, CO11(47)*

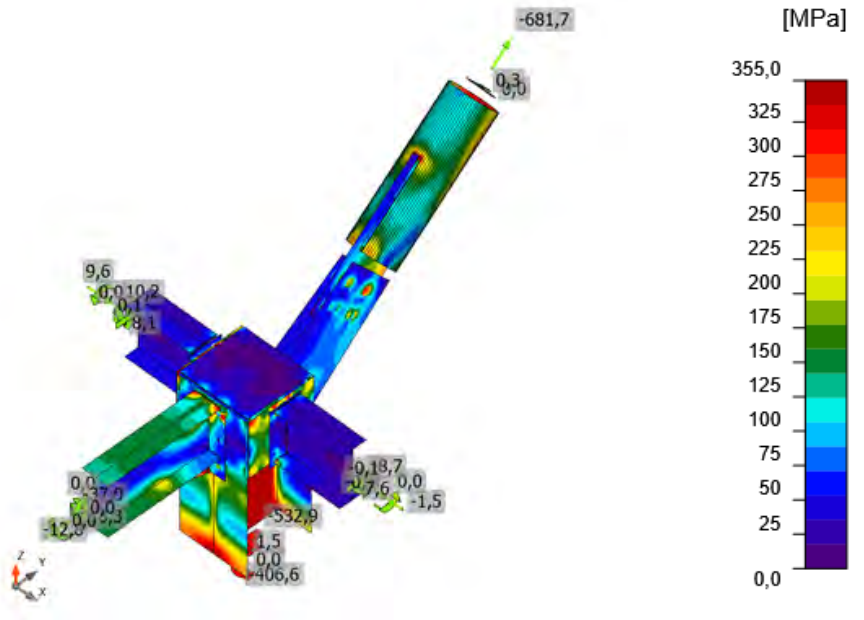


*Vergleichsspannung, CO11(47)*

## Schrauben

| Form | Position | Klasse | Lasten | $F_{t,Ed}$ [kN] | $F_{v,Ed}$ [kN] | $F_{b,Rd}$ [kN] | $Ut_t$ [%] | $Ut_s$ [%] | $Ut_{ts}$ [%] | Konstruktionsregeln | Status |
|---|---|---|---|---|---|---|---|---|---|---|---|
| 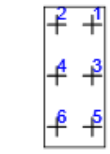 | B1 | M16 8.8 - 1 | CO11(41) | 79,5 | 1,6 | 95,8 | 87,9 | 2,7 | 65,5 | OK | OK |
| | B2 | M16 8.8 - 1 | CO11(41) | 80,4 | 1,8 | 95,7 | 88,9 | 3,0 | 66,5 | OK | OK |
| | B3 | M16 8.8 - 1 | CO11(41) | 39,3 | 4,5 | 133,3 | 43,5 | 7,5 | 38,5 | OK | OK |
| | B4 | M16 8.8 - 1 | CO11(41) | 41,3 | 4,9 | 137,5 | 45,6 | 8,2 | 40,8 | OK | OK |
| | B5 | M16 8.8 - 1 | CO11(27) | 17,9 | 0,9 | 130,6 | 19,8 | 1,5 | 15,6 | OK | OK |
| | B6 | M16 8.8 - 1 | CO11(27) | 17,5 | 0,6 | 122,9 | 19,4 | 1,1 | 14,9 | OK | OK |
| 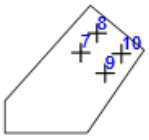 | B7 | M30 8.8 - 2 | CO11(47) | 2,2 | 109,4 | 297,0 | 0,7 | 73,7 | 51,3 | OK | OK |
| | B8 | M30 8.8 - 2 | CO11(47) | 23,5 | 111,9 | 328,2 | 7,3 | 68,1 | 57,1 | OK | OK |
| | B9 | M30 8.8 - 2 | CO11(23) | 0,5 | 64,5 | 297,0 | 0,2 | 43,4 | 30,0 | OK | OK |
| | B10 | M30 8.8 - 2 | CO11(23) | 18,8 | 65,9 | 328,2 | 5,8 | 39,9 | 34,8 | OK | OK |
| 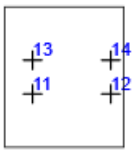 | B11 | M16 8.8 - 1 | CO9(44) | 33,8 | 2,3 | 130,7 | 37,4 | 3,8 | 30,5 | OK | OK |
| | B12 | M16 8.8 - 1 | CO11(46) | 48,6 | 5,1 | 108,4 | 53,8 | 8,5 | 46,9 | OK | OK |
| | B13 | M16 8.8 - 1 | CO9(44) | 34,3 | 2,3 | 130,7 | 37,9 | 3,8 | 30,9 | OK | OK |
| | B14 | M16 8.8 - 1 | CO11(46) | 45,5 | 4,9 | 110,1 | 50,3 | 8,1 | 44,0 | OK | OK |
| 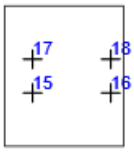 | B15 | M16 8.8 - 1 | CO11(41) | 11,6 | 6,8 | 217,8 | 12,8 | 11,2 | 20,4 | OK | OK |
| | B16 | M16 8.8 - 1 | CO11(41) | 72,8 | 7,7 | 114,4 | 80,5 | 12,8 | 70,3 | OK | OK |
| | B17 | M16 8.8 - 1 | CO11(41) | 10,9 | 6,3 | 235,2 | 12,1 | 10,5 | 19,1 | OK | OK |
| | B18 | M16 8.8 - 1 | CO11(41) | 72,5 | 7,6 | 114,4 | 80,2 | 12,7 | 69,9 | OK | OK |

**Bemessungsdaten**

| Klasse | $F_{t,Rd}$ [kN] | $B_{p,Rd}$ [kN] | $F_{v,Rd}$ [kN] |
|---|---|---|---|
| M16 8.8 - 1 | 90,4 | 281,2 | 60,3 |
| M30 8.8 - 2 | 323,1 | 715,6 | 215,4 |

**Erläuterung von Symbolen**

| | |
|---|---|
| $F_{t,Ed}$ | Zugkraft |
| $F_{v,Ed}$ | Resultierende der Schraubenscherkräfte Vy und Vz in Scherebenen |
| $F_{b,Rd}$ | Lochleibungstragfähigkeit der Platte nach EN 1993-1-8 Tab. 3.4 |
| $Ut_t$ | Ausnutzung unter Zug |
| $Ut_s$ | Ausnutzung unter Schub |
| $Ut_{ts}$ | Interaktion von Zug und Schub EN_1993-1-8 Tabelle 3.4 |
| $F_{t,Rd}$ | Zugtragfähigkeit der Schraube nach EN 1993-1-8 Tabelle 3.4 |
| $B_{p,Rd}$ | Durchstanztragfähigkeit nach EN 1993-1-8 Tabelle 3.4 |
| $F_{v,Rd}$ | Schertragfähigkeit der Schraube nach EN 1993-1-8 Tabelle 3.4 |

## Schweißnähte

| Position | Kante | $T_w$ [mm] | L [mm] | Lasten | $\sigma_{w,Ed}$ [MPa] | $\varepsilon_{Pl}$ [%] | $\sigma_{\perp}$ [MPa] | $\tau_{\perp}$ [MPa] | $\tau_{\parallel}$ [MPa] | Ut [%] | $Ut_c$ [%] | Konstruktionsregeln | Status |
|---|---|---|---|---|---|---|---|---|---|---|---|---|---|
| Steifenblech1 | 341-bfl 1 | ◢ 6,0 ◣ | 259 | CO11(41) | 190,3 | 0,0 | 20,2 | 73,1 | -81,2 | 43,7 | 31,3 | OK | OK |
| | | ◢ 6,0 ◣ | 258 | CO11(41) | 95,4 | 0,0 | 4,4 | -7,4 | 54,5 | 21,9 | 16,2 | OK | OK |
| Steifenblech1 | 341-tfl 1 | ◢ 6,0 ◣ | 258 | CO11(23) | 93,1 | 0,0 | -50,1 | -0,3 | 45,3 | 21,4 | 12,7 | OK | OK |
| | | ◢ 6,0 ◣ | 259 | CO11(41) | 236,9 | 0,0 | 49,7 | -44,9 | 126,0 | 54,4 | 31,6 | OK | OK |
| Steifenblech1 | 341-w 1 | ◢ 6,0 ◣ | 241 | CO11(47) | 29,3 | 0,0 | -13,2 | -13,1 | 7,5 | 6,7 | 6,1 | OK | OK |
| | | ◢ 6,0 ◣ | 241 | CO11(41) | 32,2 | 0,0 | 0,8 | -0,6 | 18,6 | 7,4 | 7,4 | OK | OK |
| Stirnblech1 | 95-bfl 1 | ◢ 4,0 ◣ | 100 | CO11(41) | 361,0 | 0,0 | 222,7 | 100,2 | 129,9 | 82,9 | 62,9 | OK | OK |
| | | ◢ 4,0 ◣ | 100 | CO11(41) | 184,5 | 0,0 | -28,8 | -4,8 | 105,1 | 42,4 | 35,0 | OK | OK |
| Stirnblech1 | 95-tfl 1 | ◢ 4,0 ◣ | 100 | CO11(46) | 206,1 | 0,0 | -96,4 | -65,9 | -82,0 | 47,3 | 38,8 | OK | OK |
| | | ◢ 4,0 ◣ | 100 | CO11(15) | 140,4 | 0,0 | -51,9 | 65,9 | -36,5 | 32,2 | 24,4 | OK | OK |
| Stirnblech1 | 95-w 1 | ◢ 4,0 ◣ | 189 | CO11(41) | 364,9 | 0,0 | 148,3 | 141,1 | -131,0 | 83,8 | 50,1 | OK | OK |
| | | ◢ 4,0 ◣ | 189 | CO11(41) | 359,7 | 0,0 | 138,7 | -145,7 | 124,4 | 82,6 | 48,4 | OK | OK |
| Stirnblech1 | Verstärkung1 | ◢ 6,0 ◣ | 79 | CO11(41) | 428,7 | 1,1 | -210,0 | -209,8 | 50,4 | 98,4 | 76,3 | OK | OK |
| | | ◢ 6,0 ◣ | 79 | CO11(41) | 428,7 | 1,1 | -209,5 | 209,9 | -50,9 | 98,4 | 76,0 | OK | OK |
| 95-tfl 1 | Verstärkung1 | ◢ 6,0 ◣ | 179 | CO11(46) | 394,6 | 0,0 | -112,7 | -112,0 | -187,4 | 90,6 | 58,1 | OK | OK |
| | | ◢ 6,0 ◣ | 179 | CO11(50) | 394,1 | 0,0 | -113,6 | 112,3 | 186,7 | 90,5 | 58,9 | OK | OK |
| 341-tfl 1 | Verbindungsblech1a | ◢ 10,0 ◣ | 259 | CO11(47) | 427,2 | 0,2 | 130,8 | -142,6 | -186,5 | 98,1 | 48,9 | OK | OK |
| | | ◢ 10,0 ◣ | 259 | CO11(47) | 427,2 | 0,2 | 144,4 | 133,0 | 190,3 | 98,1 | 49,2 | OK | OK |
| 341-tfl 1 | Verbindungsblech1b | ◢ 10,0 ◣ | 259 | CO11(47) | 427,3 | 0,2 | 144,6 | -132,9 | -190,3 | 98,1 | 49,6 | OK | OK |
| | | ◢ 10,0 ◣ | 259 | CO11(47) | 427,2 | 0,2 | 129,6 | 141,9 | 187,4 | 98,1 | 49,3 | OK | OK |
| Verbindungsblech1c | 271-arc 15 | ◢ 8,0 | 298 | CO11(47) | 428,9 | 1,2 | -26,4 | -5,1 | -247,1 | 98,5 | 72,9 | OK | OK |
| Verbindungsblech1c | 271-arc 18 | ◢ 8,0 | 298 | CO11(47) | 428,9 | 1,2 | -26,4 | -5,5 | 247,1 | 98,5 | 82,0 | OK | OK |

| Position | Kante | $T_w$ [mm] | L [mm] | Lasten | $\sigma_{w,Ed}$ [MPa] | $\varepsilon_{Pl}$ [%] | $\sigma_{\perp}$ [MPa] | $\tau_{\perp}$ [MPa] | $\tau_{\parallel}$ [MPa] | Ut [%] | $Ut_c$ [%] | Konstruktionsregeln | Status |
|---|---|---|---|---|---|---|---|---|---|---|---|---|---|
| Verbindungsblech1c | 271-arc 47 | ◢ 8,0 | 298 | CO11(23) | 355,2 | 0,0 | -130,2 | -15,6 | -190,2 | 81,6 | 47,2 | OK | OK |
| Verbindungsblech1c | 271-arc 50 | ◢ 8,0 | 298 | CO11(23) | 361,1 | 0,0 | -132,2 | -18,6 | 193,1 | 82,9 | 54,6 | OK | OK |
| Verschobene Stirnplatte1a | 341-tfl 1 | ◢ 6,0 ◣ | 206 | CO11(46) | 252,0 | 0,0 | -109,5 | -124,2 | 42,0 | 57,9 | 43,9 | OK | OK |
| | | ◢ 6,0 ◣ | 206 | CO11(46) | 427,1 | 0,2 | 319,0 | 157,5 | 45,5 | 98,1 | 81,9 | OK | OK |
| Verschobene Stirnplatte1a | 341-bfl 1 | ◢ 6,0 ◣ | 209 | CO11(46) | 427,1 | 0,2 | -304,9 | 172,3 | 12,1 | 98,1 | 73,7 | OK | OK |
| | | ◢ 6,0 ◣ | 209 | CO11(46) | 228,5 | 0,0 | -73,0 | 124,5 | -11,2 | 52,5 | 40,2 | OK | OK |
| Verschobene Stirnplatte1b | 171-bfl 1 | ◢ 4,0 ◣ | 100 | CO9(44) | 159,5 | 0,0 | -60,1 | -45,5 | -72,2 | 36,6 | 23,2 | OK | OK |
| | | ◢ 4,0 ◣ | 100 | CO9(44) | 194,6 | 0,0 | -119,0 | -68,0 | 57,3 | 44,7 | 29,2 | OK | OK |
| Verschobene Stirnplatte1b | 171-tfl 1 | ◢ 4,0 ◣ | 99 | CO11(46) | 429,0 | 1,2 | -177,2 | -173,2 | 144,5 | 98,5 | 82,2 | OK | OK |
| | | ◢ 4,0 ◣ | 99 | CO11(46) | 428,5 | 1,0 | -165,3 | 170,4 | -151,8 | 98,4 | 76,8 | OK | OK |
| Verschobene Stirnplatte1b | 171-w 1 | ◢ 4,0 ◣ | 189 | CO11(46) | 153,0 | 0,0 | 76,9 | 75,5 | 11,4 | 35,1 | 21,3 | OK | OK |
| | | ◢ 4,0 ◣ | 189 | CO11(46) | 151,3 | 0,0 | 74,0 | -75,3 | -11,4 | 34,7 | 20,2 | OK | OK |
| Verschobene Stirnplatte2a | 341-tfl 1 | ◢ 6,0 ◣ | 206 | CO11(41) | 392,9 | 0,0 | -70,3 | -220,6 | -33,7 | 90,2 | 64,1 | OK | OK |
| | | ◢ 6,0 ◣ | 206 | CO11(41) | 429,9 | 1,7 | 311,1 | 166,6 | -39,7 | 98,7 | 94,0 | OK | OK |
| Verschobene Stirnplatte2a | 341-bfl 1 | ◢ 6,0 ◣ | 209 | CO11(41) | 428,6 | 1,0 | -308,2 | 171,8 | 7,5 | 98,4 | 93,4 | OK | OK |
| | | ◢ 6,0 ◣ | 209 | CO11(41) | 366,7 | 0,0 | -69,9 | 204,6 | 36,3 | 84,2 | 66,1 | OK | OK |
| Verschobene Stirnplatte2b | 105-bfl 1 | ◢ 4,0 ◣ | 100 | CO11(41) | 228,6 | 0,0 | 124,6 | 75,1 | 81,3 | 52,5 | 42,0 | OK | OK |
| | | ◢ 4,0 ◣ | 100 | CO11(41) | 186,9 | 0,0 | 107,3 | 69,6 | 54,4 | 42,9 | 34,2 | OK | OK |
| Verschobene Stirnplatte2b | 105-tfl 1 | ◢ 4,0 ◣ | 99 | CO11(41) | 432,6 | 3,3 | -189,4 | -187,4 | -123,7 | 99,3 | 91,0 | OK | OK |
| | | ◢ 4,0 ◣ | 100 | CO11(41) | 431,3 | 2,5 | -180,8 | 183,4 | 132,2 | 99,0 | 92,3 | OK | OK |
| Verschobene Stirnplatte2b | 105-w 1 | ◢ 4,0 ◣ | 189 | CO11(41) | 245,6 | 0,0 | 115,6 | 121,3 | -30,5 | 56,4 | 35,0 | OK | OK |
| | | ◢ 4,0 ◣ | 189 | CO11(41) | 244,2 | 0,0 | 123,5 | -117,6 | 30,8 | 56,1 | 33,9 | OK | OK |

**Bemessungsdaten**

| Material | $f_u$ [MPa] | $\beta_w$ [-] | $\sigma_{w,Rd}$ [MPa] | 0.9 σ [MPa] |
|---|---|---|---|---|
| S 355 | 490,0 | 0,90 | 435,6 | 352,8 |

**Erläuterung von Symbolen**

| | |
|---|---|
| $T_w$ | Nahtdicke a |
| L | Länge |
| $\sigma_{w,Ed}$ | Vergleichsspannung |
| $\varepsilon_{Pl}$ | Dehnung |
| $\sigma_{\perp}$ | Senkrechte Spannung |
| $\tau_{\perp}$ | Scherspannung senkrecht zur Schweißnahtachse |
| $\tau_{\parallel}$ | Scherspannung parallel zur Schweißnahtachse |
| Ut | Ausnutzung |
| $Ut_c$ | Schätzung der Schweißnahtkapazität |
| ◢ | Kehlnaht |
| $f_u$ | Grenzfestigkeit der Schweißnaht |
| $\beta_w$ | Korrelationsfaktor nach EN 1993-1-8 Tab. 4.1 |
| $\sigma_{w,Rd}$ | Tragfähigkeit der Schweißnaht |
| 0.9 σ | Senkrechter Spannungswiderstand - 0.9*fu / γM2 |

### Beulen

**Die Beulanalyse wurde nicht berechnet.**

## Normeinstellungen

| Position | Wert | Einheit | Bezug |
|---|---|---|---|
| Sicherheitsfaktor $\gamma_{M0}$ | 1,00 | - | EN 1993-1-1 – 6.1 |
| Sicherheitsfaktor $\gamma_{M1}$ | 1,00 | - | EN 1993-1-1 – 6.1 |
| Sicherheitsfaktor $\gamma_{M2}$ | 1,25 | - | EN 1993-1-1 – 6.1 |
| Sicherheitsfaktor $\gamma_{M3}$ | 1,25 | - | EN 1993-1-8 – Table 2.1 |
| Sicherheitsfaktor $\gamma_C$ | 1,50 | - | EN 1992-1-1 – 2.4.2.4 |
| Sicherheitsfaktor $\gamma_{Inst}$ | 1,20 | - | EN 1992-4 – Table 4.1 |
| Verbindungskoeffizient βj | 0,67 | - | EN 1993-1-8 – 6.2.5(7) |
| Wirksame Fläche - Einfluss der Netzgröße | 0,10 | - | |
| Reibungsbeiwert - Beton | 0,25 | - | EN 1993-1-8 |
| Reibungskoeffizient bei gleitfesten Verbindungen | 0,30 | - | EN 1993-1-8 – Table 3.7 |
| Plastische Dehnung - Grenzwert | 0,05 | - | EN 1993-1-5 |
| Konstruktionsregeln | Ja | | |
| Distance between bolts [d0] | 2,20 | - | EN 1993-1-8 – Table 3.3 |
| Distance between bolts and edge [d0] | 1,20 | - | EN 1993-1-8 – Table 3.3 |
| Nachweis der Tragfähigkeit bei Betonausbruch | Beide | | |
| Berechnetes αb für Lochleibungsnachweis anwenden. | Ja | | EN 1993-1-8 – Table 3.4 |
| Gerissener Beton | Ja | | EN 1992-4 |
| Überprüfen der lokalen Verformung | Ja | | |
| Lokale Verformung - Grenzwert | 0,03 | - | CIDECT DG 1, 3 – 1.1 |
| Geometrische Nichtlinearität (GMNA) | Ja | | Analyse mit großen Verformungen für Verbindungen mit Hohlprofilen |
| Ausgesteiftes System | Nein | | EN 1993-1-8 – 5.2.2.5 |

| | |
|---|---|
| **Projekt:** | **IdeaStatiCa-Stadion_Fazanerija_JK-6_BR - 96** |
| **Projektnummer:** | **Detajl D4-O3** |
| **Autor:** | **mag. Igor Gorup dipl. ing.** |

## Projektdaten

| | |
|---|---|
| Projektname | IdeaStatiCa-Stadion_Fazanerija_JK-6_BR - 96 |
| Projektnummer | Detajl D4-O3 |
| Autor | mag. Igor Gorup dipl. ing. |
| Beschreibung | |
| Datum | 18.06.2025 |
| Norm | EN |

## Material

| | |
|---|---|
| Stahl | Baustahl S 355, S 355 |

# Projektposition 96

## Bemessung

| | |
|---|---|
| Name | 96 |
| Beschreibung | |
| Berechnung | Spannung, Dehnung/ Lasten im Gleichgewicht |

### Bauteile

#### Geometrie

| Name | Querschnitt | β – Rotation [°] | Y - Rotation [°] | α - Rotation [°] | Abstand ex [mm] | Abstand ey [mm] | Abstand ez [mm] |
|---|---|---|---|---|---|---|---|
| 266 | 358 - IPE400 | 90,0 | 3,5 | 180,0 | 0 | 0 | 0 |
| 268 | 358 - IPE400 | 90,0 | 3,5 | 180,0 | 0 | 0 | 0 |
| 349 | 289 - HEB260 | 0,0 | 90,0 | -90,0 | 0 | 0 | 0 |
| 205 | 6 - IPE200 | 0,0 | 0,0 | -180,0 | 0 | 0 | -100 |
| 500 | 6 - IPE200 | 0,0 | 0,0 | -180,0 | 0 | 0 | -100 |
| 510 | 470 - RO101.6X2.9 | 50,1 | 2,7 | 180,0 | 0 | -100 | -100 |

#### Auflager und Kräfte

| Name | Auflager | Kräfte in | X [mm] |
|---|---|---|---|
| 266 / ende | | Position | 0 |
| 268 / anfang | | Position | 0 |
| 349 / anfang | N-Vy-Vz-Mx-My-Mz | Position | 0 |
| 349 / ende | | Position | 0 |
| 205 / ende | | Position | 0 |
| 500 / anfang | | Position | 0 |
| 510 / ende | Mx-My-Mz | Schrauben | 0 |

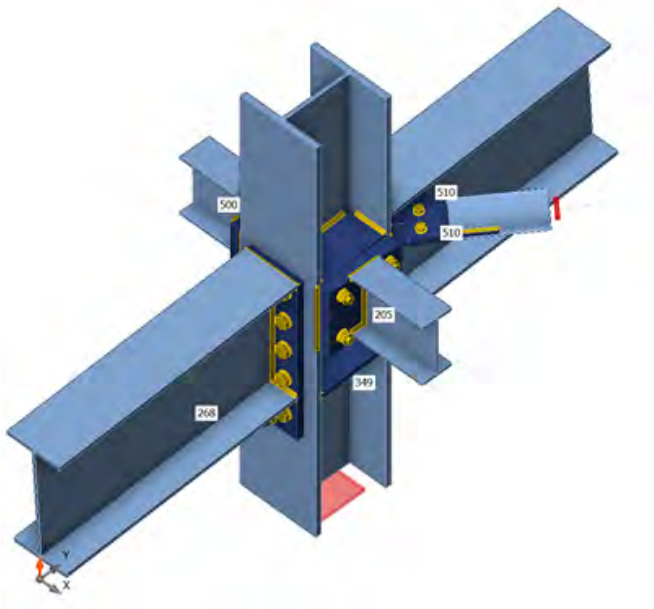


### Querschnitte

| Name | Material |
|---|---|
| 358 - IPE400 | Baustahl S 355 |
| 289 - HEB260 | Baustahl S 355 |
| 6 - IPE200 | Baustahl S 355 |
| 470 - RO101.6X2.9 | Baustahl S 355 |

## Schrauben

| Name | Durchmesser [mm] | $f_y$ [MPa] | $f_u$ [MPa] | Bruttofläche [$mm^2$] |
|---|---|---|---|---|
| M24 8.8 | 24 | 640,0 | 800,0 | 452 |
| M20 8.8 | 20 | 640,0 | 800,0 | 314 |
| M16 8.8 | 16 | 640,0 | 800,0 | 201 |

## Lasteinwirkungen (Kräfte im Gleichgewicht)

| Name | Bauteil | N [kN] | Vy [kN] | Vz [kN] | Mx [kNm] | My [kNm] | Mz [kNm] |
|---|---|---|---|---|---|---|---|
| CO11(54) | 266 / Ende | 81,7 | -1,5 | -16,5 | 0,0 | 32,4 | -2,7 |
| | 268 / Anfang | -72,8 | -1,4 | -97,6 | 0,2 | -119,6 | 2,6 |
| | 349 / Anfang | -191,2 | 3,8 | 13,3 | 0,0 | 84,8 | -2,0 |
| | 349 / Ende | 103,8 | 0,0 | -0,9 | 0,0 | 2,4 | 0,1 |
| | 205 / Ende | -18,4 | 0,1 | 13,3 | 0,0 | -21,1 | 0,0 |
| | 500 / Anfang | 29,4 | 0,1 | 12,8 | 0,0 | 19,4 | 0,1 |
| | 510 / Ende | -18,5 | 0,0 | 0,3 | 0,0 | 0,0 | 0,0 |
| CO9(55) | 266 / Ende | 41,6 | 2,1 | -0,8 | -0,1 | 6,9 | 5,4 |
| | 268 / Anfang | -55,2 | 2,0 | 54,6 | -0,8 | 69,0 | -5,3 |
| | 349 / Anfang | 60,1 | -16,0 | -19,5 | 0,0 | -86,2 | 18,4 |
| | 349 / Ende | -7,5 | 0,5 | -3,7 | 0,0 | 10,3 | 1,4 |
| | 205 / Ende | 31,0 | 0,0 | -2,7 | 0,0 | 9,6 | 0,0 |
| | 500 / Anfang | -47,5 | 0,0 | 2,6 | 0,0 | 9,3 | -0,2 |
| | 510 / Ende | 39,6 | 0,0 | 0,0 | 0,0 | 0,0 | 0,0 |
| CO11(56) | 266 / Ende | 104,4 | 1,2 | -16,9 | 0,0 | 34,7 | 1,8 |
| | 268 / Anfang | -113,5 | 1,0 | -92,7 | -0,7 | -112,2 | -1,7 |
| | 349 / Anfang | -185,5 | -7,1 | 7,0 | 0,1 | 72,0 | 9,0 |
| | 349 / Ende | 102,5 | 0,0 | -2,0 | 0,0 | 5,5 | 0,0 |
| | 205 / Ende | -1,1 | 0,1 | 11,9 | 0,0 | -16,1 | 0,0 |
| | 500 / Anfang | -3,2 | 0,1 | 14,2 | 0,0 | 24,3 | -0,1 |
| | 510 / Ende | 14,2 | 0,0 | 0,2 | 0,0 | 0,0 | 0,0 |
| CO11(57) | 266 / Ende | -556,8 | -1,3 | 88,2 | 0,0 | -206,6 | -2,2 |
| | 268 / Anfang | 532,3 | -1,1 | 224,0 | 0,5 | 281,0 | 2,1 |
| | 349 / Anfang | 934,2 | 2,9 | -0,9 | 0,0 | -18,8 | -0,9 |
| | 349 / Ende | -590,2 | -0,1 | 19,1 | 0,0 | -55,6 | -0,4 |
| | 205 / Ende | -7,7 | -0,2 | 15,2 | 0,0 | -22,0 | -0,3 |
| | 500 / Anfang | 18,3 | -0,2 | 14,9 | 0,0 | 21,2 | 0,3 |
| | 510 / Ende | -17,2 | 0,0 | 0,3 | 0,0 | 0,0 | 0,0 |
| CO11(58) | 266 / Ende | -531,3 | 1,6 | 88,1 | -0,3 | -204,2 | 3,1 |
| | 268 / Anfang | 485,6 | 1,8 | 229,1 | 0,0 | 288,6 | -3,2 |
| | 349 / Anfang | 945,6 | -9,5 | -7,2 | 0,0 | -32,2 | 12,9 |
| | 349 / Ende | -591,6 | 0,2 | 17,9 | -0,1 | -52,1 | 0,6 |
| | 205 / Ende | 10,0 | -0,2 | 15,8 | 0,0 | -19,6 | -0,3 |
| | 500 / Anfang | -16,6 | -0,2 | 19,5 | 0,0 | 32,6 | 0,3 |
| | 510 / Ende | 19,6 | 0,0 | 0,2 | 0,0 | 0,0 | 0,0 |
| CO11(59) | 266 / Ende | 119,7 | -1,5 | -22,9 | 0,0 | 47,2 | -2,7 |
| | 268 / Anfang | -107,9 | -1,4 | -107,8 | 0,1 | -132,8 | 2,6 |
| | 349 / Anfang | -261,1 | 5,1 | 12,6 | 0,0 | 79,2 | -4,5 |
| | 349 / Ende | 145,1 | 0,1 | -2,3 | 0,0 | 6,4 | 0,1 |
| | 205 / Ende | -16,4 | 0,1 | 7,7 | 0,0 | -12,9 | 0,1 |
| | 500 / Anfang | 25,8 | 0,1 | 6,5 | 0,0 | 8,7 | 0,0 |
| | 510 / Ende | -18,2 | 0,0 | 0,3 | 0,0 | 0,0 | 0,0 |
| CO11(60) | 266 / Ende | -466,2 | 1,5 | 77,8 | -0,3 | -181,3 | 2,9 |
| | 268 / Anfang | 422,4 | 1,7 | 174,1 | 0,0 | 221,0 | -3,0 |
| | 349 / Anfang | 804,7 | -9,7 | -2,9 | 0,1 | 8,8 | 13,9 |
| | 349 / Ende | -517,6 | 0,2 | 16,8 | -0,1 | -48,5 | 0,4 |
| | 205 / Ende | 6,9 | -0,1 | 14,9 | 0,0 | -18,2 | -0,2 |
| | 500 / Anfang | -12,5 | -0,1 | 18,8 | 0,0 | 32,1 | 0,2 |
| | 510 / Ende | 18,6 | 0,0 | 0,2 | 0,0 | 0,0 | 0,0 |
| CO11(61) | 266 / Ende | -556,7 | -1,3 | 88,2 | 0,0 | -206,5 | -2,1 |
| | 268 / Anfang | 531,9 | -1,1 | 223,6 | 0,5 | 280,5 | 2,0 |
| | 349 / Anfang | 938,8 | 2,2 | -0,6 | 0,0 | -18,3 | 0,5 |
| | 349 / Ende | -590,2 | -0,1 | 19,1 | 0,0 | -55,6 | -0,4 |

| Name | Bauteil | N [kN] | Vy [kN] | Vz [kN] | Mx [kNm] | My [kNm] | Mz [kNm] |
|---|---|---|---|---|---|---|---|
| | 205 / Ende | -8,7 | -0,2 | 17,5 | 0,0 | -25,8 | -0,3 |
| | 500 / Anfang | 19,8 | -0,2 | 17,6 | 0,0 | 26,5 | 0,4 |
| | 510 / Ende | -17,1 | 0,0 | 0,3 | 0,0 | 0,0 | 0,0 |
| CO11(62) | 266 / Ende | 81,8 | -1,5 | -16,6 | 0,0 | 32,5 | -2,7 |
| | 268 / Anfang | -72,7 | -1,4 | -96,2 | 0,1 | -117,8 | 2,6 |
| | 349 / Anfang | -194,8 | 4,5 | 13,0 | 0,0 | 82,8 | -3,3 |
| | 349 / Ende | 103,7 | 0,0 | -0,9 | 0,0 | 2,6 | 0,1 |
| | 205 / Ende | -17,2 | 0,1 | 11,0 | 0,0 | -17,2 | 0,1 |
| | 500 / Anfang | 27,3 | 0,1 | 10,1 | 0,0 | 14,2 | 0,0 |
| | 510 / Ende | -18,3 | 0,0 | 0,3 | 0,0 | 0,0 | 0,0 |
| CO12(63) | 266 / Ende | -49,2 | -1,5 | 5,7 | 0,0 | -16,9 | -2,6 |
| | 268 / Anfang | 51,7 | -1,3 | -29,7 | 0,3 | -34,8 | 2,5 |
| | 349 / Anfang | 30,0 | 4,4 | 9,4 | 0,0 | 60,5 | -3,3 |
| | 349 / Ende | -36,5 | 0,0 | 3,2 | 0,0 | -8,8 | -0,1 |
| | 205 / Ende | -14,2 | 0,0 | 8,7 | 0,0 | -13,9 | 0,0 |
| | 500 / Anfang | 24,0 | 0,0 | 7,8 | 0,0 | 10,9 | 0,1 |
| | 510 / Ende | -17,7 | 0,0 | 0,3 | 0,0 | 0,0 | 0,0 |
| CO11(44) | 266 / Ende | -347,8 | -1,4 | 54,7 | 0,0 | -130,9 | -2,5 |
| | 268 / Anfang | 331,2 | -1,2 | 82,6 | 0,4 | 106,4 | 2,4 |
| | 349 / Anfang | 525,2 | 2,6 | 7,7 | 0,0 | 65,0 | 0,4 |
| | 349 / Ende | -355,8 | -0,1 | 14,2 | 0,0 | -40,5 | -0,3 |
| | 205 / Ende | -14,8 | 0,0 | 15,2 | 0,0 | -23,2 | -0,1 |
| | 500 / Anfang | 26,5 | -0,1 | 15,2 | 0,0 | 23,6 | 0,2 |
| | 510 / Ende | -18,0 | 0,0 | 0,3 | 0,0 | 0,0 | 0,0 |
| CO11(45) | 266 / Ende | -300,2 | 1,5 | 51,1 | -0,2 | -118,4 | 2,7 |
| | 268 / Anfang | 267,7 | 1,5 | 111,4 | -0,1 | 142,0 | -2,7 |
| | 349 / Anfang | 537,2 | -9,5 | -2,0 | 0,1 | 7,1 | 13,4 |
| | 349 / Ende | -338,8 | 0,1 | 10,8 | -0,1 | -30,7 | 0,3 |
| | 205 / Ende | 5,5 | -0,1 | 15,5 | 0,0 | -19,5 | -0,2 |
| | 500 / Anfang | -10,3 | -0,1 | 19,2 | 0,0 | 32,8 | 0,2 |
| | 510 / Ende | 17,5 | 0,0 | 0,2 | 0,0 | 0,0 | 0,0 |
| CO11(46) | 266 / Ende | -265,8 | -1,2 | 41,9 | 0,0 | -96,0 | -1,9 |
| | 268 / Anfang | 261,9 | -1,1 | 134,8 | 0,4 | 167,7 | 1,9 |
| | 349 / Anfang | 493,5 | 2,5 | -3,4 | 0,0 | -49,6 | -1,0 |
| | 349 / Ende | -282,0 | 0,0 | 7,8 | 0,0 | -22,1 | -0,2 |
| | 205 / Ende | -7,0 | -0,2 | 17,2 | 0,0 | -25,2 | -0,2 |
| | 500 / Anfang | 16,5 | -0,2 | 16,9 | 0,0 | 24,4 | 0,3 |
| | 510 / Ende | -15,1 | 0,0 | 0,3 | 0,0 | 0,0 | 0,0 |
| CO11(47) | 266 / Ende | -323,3 | 1,4 | 54,5 | -0,2 | -128,5 | 2,5 |
| | 268 / Anfang | 286,9 | 1,4 | 87,9 | -0,3 | 114,2 | -2,5 |
| | 349 / Anfang | 531,5 | -8,9 | 1,2 | 0,1 | 51,6 | 12,3 |
| | 349 / Ende | -357,2 | 0,1 | 13,0 | -0,1 | -37,2 | 0,3 |
| | 205 / Ende | 3,5 | 0,0 | 13,6 | 0,0 | -17,4 | -0,1 |
| | 500 / Anfang | -8,7 | 0,0 | 16,9 | 0,0 | 29,3 | 0,1 |
| | 510 / Ende | 17,4 | 0,0 | 0,2 | 0,0 | 0,0 | 0,0 |
| CO11(48) | 266 / Ende | -389,5 | -1,3 | 61,8 | 0,0 | -143,8 | -2,1 |
| | 268 / Anfang | 375,1 | -1,1 | 160,9 | 0,5 | 201,6 | 2,0 |
| | 349 / Anfang | 671,3 | 1,9 | -0,3 | 0,0 | -20,1 | 0,7 |
| | 349 / Ende | -411,1 | -0,1 | 13,1 | 0,0 | -37,6 | -0,3 |
| | 205 / Ende | -9,3 | -0,2 | 18,1 | 0,0 | -26,7 | -0,2 |
| | 500 / Anfang | 20,2 | -0,2 | 18,2 | 0,0 | 27,6 | 0,3 |
| | 510 / Ende | -16,3 | 0,0 | 0,3 | 0,0 | 0,0 | 0,0 |
| CO11(50) | 266 / Ende | -433,0 | -1,2 | 68,8 | 0,1 | -159,2 | -2,0 |
| | 268 / Anfang | 417,8 | -1,1 | 197,7 | 0,4 | 246,7 | 1,9 |

| Name | Bauteil | N [kN] | Vy [kN] | Vz [kN] | Mx [kNm] | My [kNm] | Mz [kNm] |
|---|---|---|---|---|---|---|---|
| | 349 / Anfang | 763,1 | 2,5 | -3,3 | 0,0 | -47,4 | -0,7 |
| | 349 / Ende | -460,3 | -0,1 | 13,9 | 0,0 | -40,1 | -0,3 |
| | 205 / Ende | -6,8 | -0,2 | 17,7 | 0,0 | -26,0 | -0,3 |
| | 500 / Anfang | 16,9 | -0,2 | 17,5 | 0,0 | 25,5 | 0,4 |
| | 510 / Ende | -15,9 | 0,0 | 0,3 | 0,0 | 0,0 | 0,0 |
| CO11(51) | 266 / Ende | 142,2 | 1,2 | -23,2 | 0,0 | 49,5 | 1,8 |
| | 268 / Anfang | -148,2 | 1,0 | -102,9 | -0,7 | -125,4 | -1,7 |
| | 349 / Anfang | -255,4 | -5,7 | 6,3 | 0,1 | 66,5 | 6,4 |
| | 349 / Ende | 143,7 | 0,0 | -3,5 | 0,0 | 9,5 | -0,1 |
| | 205 / Ende | 0,9 | 0,1 | 6,3 | 0,0 | -8,0 | 0,1 |
| | 500 / Anfang | -6,7 | 0,1 | 7,9 | 0,0 | 13,6 | -0,1 |
| | 510 / Ende | 14,4 | 0,0 | 0,2 | 0,0 | 0,0 | 0,0 |
| CO11(52) | 266 / Ende | -365,0 | 1,5 | 61,6 | -0,2 | -141,5 | 2,9 |
| | 268 / Anfang | 330,9 | 1,7 | 166,2 | -0,1 | 209,4 | -3,0 |
| | 349 / Anfang | 677,7 | -9,4 | -6,7 | 0,0 | -33,5 | 12,5 |
| | 349 / Ende | -412,5 | 0,1 | 12,0 | -0,1 | -34,3 | 0,4 |
| | 205 / Ende | 8,8 | -0,2 | 16,4 | 0,0 | -20,8 | -0,2 |
| | 500 / Anfang | -14,9 | -0,2 | 19,9 | 0,0 | 33,3 | 0,2 |
| | 510 / Ende | 19,0 | 0,0 | 0,2 | 0,0 | 0,0 | 0,0 |
| CO11(40) | 266 / Ende | -180,8 | -1,4 | 27,5 | 0,0 | -67,5 | -2,5 |
| | 268 / Anfang | 174,6 | -1,3 | 20,3 | 0,4 | 27,9 | 2,4 |
| | 349 / Anfang | 258,6 | 2,5 | 8,9 | 0,0 | 62,4 | 0,3 |
| | 349 / Ende | -178,1 | 0,0 | 8,1 | 0,0 | -22,7 | -0,2 |
| | 205 / Ende | -15,9 | 0,0 | 15,7 | 0,0 | -24,2 | -0,1 |
| | 500 / Anfang | 27,6 | 0,0 | 15,7 | 0,0 | 24,6 | 0,2 |
| | 510 / Ende | -17,9 | 0,0 | 0,3 | 0,0 | 0,0 | 0,0 |
| CO11(28) | 266 / Ende | -242,0 | 1,5 | 41,7 | -0,1 | -93,6 | 2,9 |
| | 268 / Anfang | 218,8 | 1,6 | 140,0 | -0,2 | 175,3 | -3,0 |
| | 349 / Anfang | 499,7 | -8,6 | -9,8 | -0,1 | -62,7 | 10,4 |
| | 349 / Ende | -283,3 | 0,1 | 6,7 | 0,0 | -18,9 | 0,3 |
| | 205 / Ende | 10,6 | -0,2 | 15,7 | 0,0 | -19,6 | -0,2 |
| | 500 / Anfang | -17,6 | -0,2 | 18,6 | 0,0 | 29,9 | 0,2 |
| | 510 / Ende | 19,2 | 0,0 | 0,2 | 0,0 | 0,0 | 0,0 |
| CO11(29) | 266 / Ende | -52,0 | -1,5 | 5,9 | 0,0 | -18,7 | -2,7 |
| | 268 / Anfang | 52,1 | -1,4 | -50,5 | 0,2 | -59,5 | 2,6 |
| | 349 / Anfang | 20,7 | 3,4 | 12,8 | 0,0 | 89,2 | -1,4 |
| | 349 / Ende | -37,3 | 0,0 | 4,0 | 0,0 | -11,1 | -0,1 |
| | 205 / Ende | -17,9 | 0,1 | 13,7 | 0,0 | -21,6 | 0,0 |
| | 500 / Anfang | 29,1 | 0,0 | 13,3 | 0,0 | 20,4 | 0,1 |
| | 510 / Ende | -18,4 | 0,0 | 0,3 | 0,0 | 0,0 | 0,0 |
| CO11(13) | 266 / Ende | 142,1 | 1,2 | -23,2 | 0,0 | 49,4 | 1,8 |
| | 268 / Anfang | -148,2 | 1,0 | -104,3 | -0,7 | -127,1 | -1,7 |
| | 349 / Anfang | -251,8 | -6,4 | 6,6 | 0,1 | 68,4 | 7,7 |
| | 349 / Ende | 143,8 | 0,0 | -3,4 | 0,0 | 9,3 | -0,1 |
| | 205 / Ende | -0,4 | 0,1 | 8,7 | 0,0 | -11,9 | 0,0 |
| | 500 / Anfang | -4,5 | 0,1 | 10,6 | 0,0 | 18,8 | -0,1 |
| | 510 / Ende | 14,2 | 0,0 | 0,2 | 0,0 | 0,0 | 0,0 |
| CO11(16) | 266 / Ende | 119,6 | -1,5 | -22,9 | 0,0 | 47,1 | -2,7 |
| | 268 / Anfang | -108,0 | -1,4 | -109,2 | 0,1 | -134,5 | 2,6 |
| | 349 / Anfang | -257,5 | 4,4 | 13,0 | 0,0 | 81,1 | -3,2 |
| | 349 / Ende | 145,2 | 0,1 | -2,3 | 0,0 | 6,3 | 0,1 |
| | 205 / Ende | -17,6 | 0,1 | 10,1 | 0,0 | -16,8 | 0,1 |
| | 500 / Anfang | 27,9 | 0,1 | 9,2 | 0,0 | 13,9 | 0,0 |
| | 510 / Ende | -18,4 | 0,0 | 0,3 | 0,0 | 0,0 | 0,0 |

| Name | Bauteil | N [kN] | Vy [kN] | Vz [kN] | Mx [kNm] | My [kNm] | Mz [kNm] |
|---|---|---|---|---|---|---|---|
| CO11(17) | 266 / Ende | -531,3 | 1,5 | 88,1 | -0,3 | -204,2 | 3,0 |
| | 268 / Anfang | 486,0 | 1,7 | 229,6 | 0,0 | 289,1 | -3,2 |
| | 349 / Anfang | 941,0 | -8,7 | -7,4 | 0,0 | -32,6 | 11,5 |
| | 349 / Ende | -591,6 | 0,2 | 17,9 | -0,1 | -52,2 | 0,6 |
| | 205 / Ende | 10,9 | -0,2 | 13,5 | 0,0 | -15,8 | -0,2 |
| | 500 / Anfang | -18,2 | -0,2 | 16,7 | 0,0 | 27,4 | 0,2 |
| | 510 / Ende | 19,5 | 0,0 | 0,2 | 0,0 | 0,0 | 0,0 |
| CO11(22) | 266 / Ende | -491,2 | -1,3 | 77,9 | 0,0 | -183,6 | -2,2 |
| | 268 / Anfang | 467,8 | -1,1 | 168,7 | 0,6 | 213,1 | 2,1 |
| | 349 / Anfang | 798,0 | 1,8 | 3,6 | 0,0 | 22,4 | 1,7 |
| | 349 / Ende | -516,2 | -0,1 | 17,9 | 0,0 | -51,8 | -0,4 |
| | 205 / Ende | -11,6 | -0,1 | 16,6 | 0,0 | -24,3 | -0,2 |
| | 500 / Anfang | 23,4 | -0,2 | 17,0 | 0,0 | 26,2 | 0,3 |
| | 510 / Ende | -17,5 | 0,0 | 0,3 | 0,0 | 0,0 | 0,0 |
| CO11(6) | 266 / Ende | -395,1 | -1,3 | 62,9 | 0,1 | -144,9 | -2,0 |
| | 268 / Anfang | 382,9 | -1,2 | 184,8 | 0,4 | 230,2 | 2,0 |
| | 349 / Anfang | 690,1 | 3,8 | -3,9 | 0,0 | -48,9 | -3,2 |
| | 349 / Ende | -418,1 | -0,1 | 12,7 | 0,0 | -36,3 | -0,2 |
| | 205 / Ende | -5,2 | -0,2 | 12,1 | 0,0 | -17,9 | -0,2 |
| | 500 / Anfang | 14,0 | -0,2 | 11,2 | 0,0 | 14,9 | 0,3 |
| | 510 / Ende | -15,7 | 0,0 | 0,2 | 0,0 | 0,0 | 0,0 |
| CO11(11) | 266 / Ende | -85,2 | -1,5 | 11,5 | 0,0 | -31,9 | -2,7 |
| | 268 / Anfang | 83,1 | -1,4 | -35,9 | 0,2 | -41,9 | 2,6 |
| | 349 / Anfang | 76,2 | 3,4 | 12,2 | 0,0 | 88,9 | -1,3 |
| | 349 / Ende | -72,3 | 0,0 | 5,5 | 0,0 | -15,2 | -0,1 |
| | 205 / Ende | -17,6 | 0,0 | 13,8 | 0,0 | -21,8 | 0,0 |
| | 500 / Anfang | 28,9 | 0,0 | 13,4 | 0,0 | 20,6 | 0,1 |
| | 510 / Ende | -18,4 | 0,0 | 0,3 | 0,0 | 0,0 | 0,0 |

### Fehlende Lasten

| Name | X [kN] | Y [kN] | Z [kN] | Mx [kNm] | My [kNm] | Mz [kNm] |
|---|---|---|---|---|---|---|
| CO11(54) | 0,0 | 0,0 | -0,2 | 1,3 | -0,2 | 1,8 |
| CO9(55) | -2,5 | -3,2 | 0,0 | -2,9 | 1,1 | -4,0 |
| CO11(56) | 0,0 | 0,0 | 0,1 | -1,0 | 0,5 | -1,4 |
| CO11(57) | 0,0 | 0,0 | -0,5 | 1,3 | -0,1 | 1,7 |
| CO11(58) | 0,0 | 0,0 | -0,1 | -1,4 | 0,8 | -2,0 |
| CO11(59) | 0,0 | 0,0 | -0,1 | 1,3 | -0,3 | 1,8 |
| CO11(60) | 0,0 | 0,0 | 0,0 | -1,3 | 0,8 | -1,9 |
| CO11(61) | 0,0 | 0,0 | -0,5 | 1,3 | 0,0 | 1,7 |
| CO11(62) | 0,0 | 0,0 | -0,2 | 1,3 | -0,3 | 1,8 |
| CO12(63) | 0,0 | 0,0 | -0,1 | 1,3 | -0,2 | 1,8 |
| CO11(44) | 0,0 | 0,1 | -0,3 | 1,3 | 0,0 | 1,8 |
| CO11(45) | 0,0 | 0,0 | 0,1 | -1,3 | 0,8 | -1,7 |
| CO11(46) | 0,0 | 0,0 | -0,2 | 1,1 | -0,1 | 1,5 |
| CO11(47) | 0,0 | 0,0 | 0,1 | -1,2 | 0,7 | -1,7 |
| CO11(48) | 0,0 | 0,0 | -0,3 | 1,2 | 0,0 | 1,6 |
| CO11(50) | 0,0 | 0,0 | -0,4 | 1,1 | 0,0 | 1,6 |
| CO11(51) | 0,0 | 0,0 | 0,0 | -1,0 | 0,4 | -1,4 |
| CO11(52) | 0,0 | 0,0 | 0,0 | -1,4 | 0,7 | -1,9 |
| CO11(40) | 0,0 | 0,0 | -0,2 | 1,3 | 0,0 | 1,8 |
| CO11(28) | 0,0 | 0,0 | 0,1 | -1,4 | 0,6 | -1,9 |
| CO11(29) | 0,0 | 0,0 | -0,2 | 1,3 | -0,1 | 1,8 |
| CO11(13) | 0,0 | 0,0 | 0,0 | -1,0 | 0,5 | -1,4 |
| CO11(16) | 0,0 | 0,0 | -0,1 | 1,3 | -0,3 | 1,8 |
| CO11(17) | 0,0 | 0,0 | -0,1 | -1,4 | 0,7 | -1,9 |
| CO11(22) | 0,0 | 0,1 | -0,4 | 1,3 | 0,0 | 1,7 |
| CO11(6) | 0,0 | 0,0 | -0,3 | 1,1 | -0,2 | 1,6 |
| CO11(11) | 0,0 | 0,0 | -0,2 | 1,3 | -0,1 | 1,8 |

## Nachweis

### Übersicht

| Name | Wert | Nachweisstatus |
|---|---|---|
| Berechnung | 100,0% | OK |
| Platten | 0,2 < 5,0% | OK |
| Lokale Verformung | 0,2 < 3% | OK |
| Schrauben | 82,7 < 100% | OK |
| Schweißnähte | 99,2 < 100% | OK |
| Beulen | Nicht berechnet | |

## Platten

| Name | Material | $t_p$ [mm] | Lasten | $\sigma_{Ed}$ [MPa] | $\varepsilon_{Pl}$ [%] | $\sigma_{c,Ed}$ [MPa] | Status |
|---|---|---|---|---|---|---|---|
| 266-bfl 1 | Baustahl S 355 | 13,5 | CO11(58) | 152,5 | 0,0 | 0,0 | OK |
| 266-tfl 1 | Baustahl S 355 | 13,5 | CO11(57) | 262,2 | 0,0 | 0,0 | OK |
| 266-w 1 | Baustahl S 355 | 8,6 | CO11(57) | 238,0 | 0,0 | 0,0 | OK |
| 268-bfl 1 | Baustahl S 355 | 13,5 | CO11(58) | 247,9 | 0,0 | 0,0 | OK |
| 268-tfl 1 | Baustahl S 355 | 13,5 | CO11(17) | 274,0 | 0,0 | 0,0 | OK |
| 268-w 1 | Baustahl S 355 | 8,6 | CO11(17) | 291,5 | 0,0 | 0,0 | OK |
| 349-bfl 1 | Baustahl S 355 | 17,5 | CO11(58) | 355,2 | 0,1 | 86,6 | OK |
| 349-tfl 1 | Baustahl S 355 | 17,5 | CO11(58) | 355,1 | 0,0 | 52,2 | OK |
| 349-w 1 | Baustahl S 355 | 10,0 | CO11(17) | 265,2 | 0,0 | 0,0 | OK |
| 205-bfl 1 | Baustahl S 355 | 8,5 | CO11(48) | 306,3 | 0,1 | 0,0 | OK |
| 205-tfl 1 | Baustahl S 355 | 8,5 | CO11(48) | 323,6 | 0,1 | 0,0 | OK |
| 205-w 1 | Baustahl S 355 | 5,6 | CO11(48) | 153,8 | 0,0 | 0,0 | OK |
| 500-bfl 1 | Baustahl S 355 | 8,5 | CO11(52) | 355,5 | 0,2 | 0,0 | OK |
| 500-tfl 1 | Baustahl S 355 | 8,5 | CO11(52) | 355,4 | 0,2 | 0,0 | OK |
| 500-w 1 | Baustahl S 355 | 5,6 | CO11(52) | 205,8 | 0,0 | 0,0 | OK |
| 510 | Baustahl S 355 | 2,9 | CO9(55) | 272,5 | 0,0 | 0,0 | OK |
| Stirnblech1 | S 355 | 25,0 | CO11(58) | 241,1 | 0,0 | 70,4 | OK |
| Verstärkung1 | S 355 | 15,0 | CO11(57) | 267,7 | 0,0 | 0,0 | OK |
| Stirnblech2 | S 355 | 25,0 | CO11(58) | 341,2 | 0,0 | 77,7 | OK |
| Verstärkung2 | S 355 | 15,0 | CO11(17) | 289,9 | 0,0 | 0,0 | OK |
| Rippe1a | S 355 | 15,0 | CO11(17) | 209,4 | 0,0 | 0,0 | OK |
| Rippe1b | S 355 | 15,0 | CO11(17) | 216,7 | 0,0 | 0,0 | OK |
| Rippe1c | S 355 | 15,0 | CO11(17) | 249,7 | 0,0 | 0,0 | OK |
| Rippe1d | S 355 | 15,0 | CO11(57) | 236,9 | 0,0 | 0,0 | OK |
| Verschobene Stirnplatte1a | S 355 | 20,0 | CO11(48) | 310,9 | 0,0 | 36,1 | OK |
| Verschobene Stirnplatte1b | S 355 | 20,0 | CO11(48) | 333,8 | 0,0 | 36,1 | OK |
| Verschobene Stirnplatte2a | S 355 | 20,0 | CO11(52) | 355,1 | 0,0 | 41,7 | OK |
| Verschobene Stirnplatte2b | S 355 | 20,0 | CO11(52) | 355,3 | 0,1 | 41,7 | OK |
| Verbindungsblech1a | S 355 | 10,0 | CO9(55) | 224,5 | 0,0 | 16,6 | OK |
| Verbindungsblech1b | S 355 | 10,0 | CO9(55) | 180,6 | 0,0 | 15,5 | OK |

**Bemessungsdaten**

| Material | $f_y$ [MPa] | $\varepsilon_{lim}$ [%] |
|---|---|---|
| Baustahl S 355 | 355,0 | 5,0 |
| S 355 | 355,0 | 5,0 |

**Erläuterung von Symbolen**

| | |
|---|---|
| $t_p$ | Plattendicke |
| $\sigma_{Ed}$ | Vergleichsspannung |
| $\varepsilon_{Pl}$ | Plastische Dehnung |
| $\sigma_{c,Ed}$ | Kontaktspannung |
| $f_y$ | Streckgrenze |
| $\varepsilon_{lim}$ | Grenzwert plastische Dehnung |

## Lokale Verformung

| Name | $d_0$ [mm] | Lasten | $\delta$ [mm] | $\delta_{lim}$ [mm] | $\delta/d_0$ [%] | Nachweisstatus |
|---|---|---|---|---|---|---|
| 510 | 102 | CO9(55) | 0 | 3 | 0,2 | OK |

**Erläuterung von Symbolen**

| | |
|---|---|
| $d_0$ | Querschnittsgröße |
| $\delta$ | Lokale Verformung im Querschnitt |
| $\delta_{lim}$ | Zulässige Verformung |

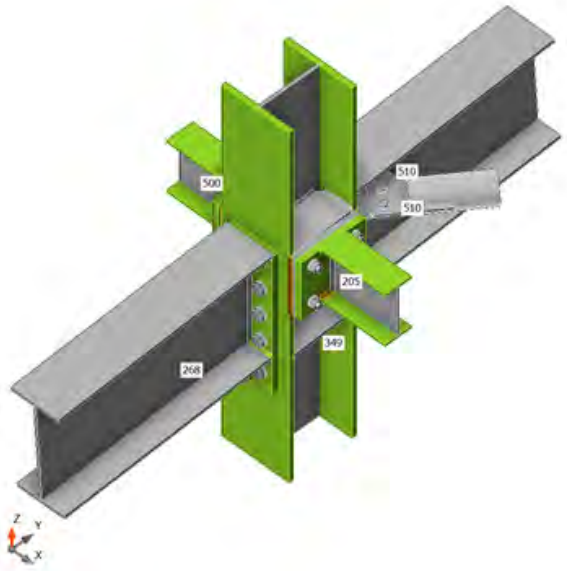


*Gesamt, CO11(52)*

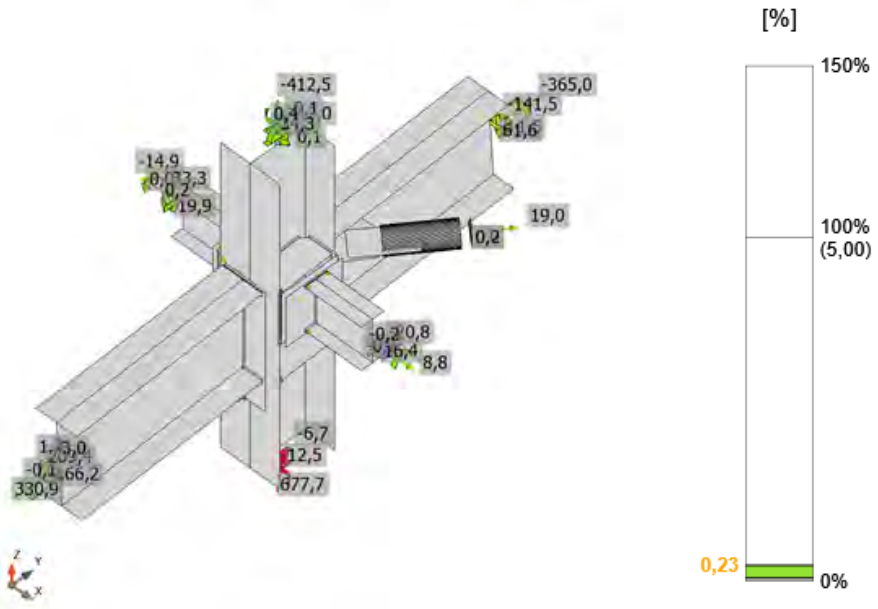


*Dehnung, CO11(52)*

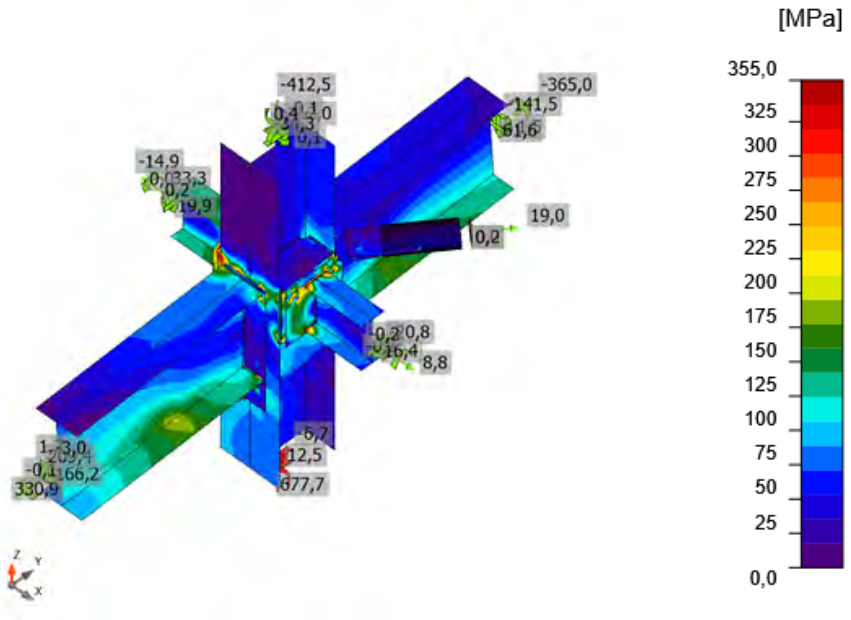


*Vergleichsspannung, CO11(52)*

## Schrauben

| Form | Position | Klasse | Lasten | $F_{t,Ed}$ [kN] | $F_{v,Ed}$ [kN] | $F_{b,Rd}$ [kN] | $Ut_t$ [%] | $Ut_s$ [%] | $Ut_{ts}$ [%] | Konstruktionsregeln | Status |
|---|---|---|---|---|---|---|---|---|---|---|---|
| 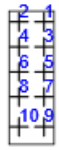 | B1 | M24 8.8 - 1 | CO11(58) | 103,2 | 8,6 | 301,5 | 50,8 | 6,3 | 42,6 | OK | OK |
| | B2 | M24 8.8 - 1 | CO11(61) | 92,5 | 6,4 | 301,5 | 45,5 | 4,7 | 37,2 | OK | OK |
| | B3 | M24 8.8 - 1 | CO11(58) | 20,1 | 7,4 | 358,0 | 9,9 | 5,4 | 12,5 | OK | OK |
| | B4 | M24 8.8 - 1 | CO11(17) | 22,9 | 7,2 | 411,6 | 11,2 | 5,3 | 13,4 | OK | OK |
| | B5 | M24 8.8 - 1 | CO11(13) | 15,8 | 6,3 | 411,6 | 7,8 | 4,6 | 10,2 | OK | OK |
| | B6 | M24 8.8 - 1 | CO11(17) | 2,8 | 12,7 | 411,6 | 1,4 | 9,4 | 10,4 | OK | OK |
| | B7 | M24 8.8 - 1 | CO11(13) | 59,3 | 5,3 | 411,6 | 29,2 | 3,9 | 24,7 | OK | OK |
| | B8 | M24 8.8 - 1 | CO11(16) | 58,7 | 4,7 | 411,6 | 28,9 | 3,5 | 24,1 | OK | OK |
| | B9 | M24 8.8 - 1 | CO11(13) | 43,7 | 1,8 | 301,5 | 21,5 | 1,3 | 16,7 | OK | OK |
| | B10 | M24 8.8 - 1 | CO11(16) | 41,2 | 1,5 | 301,5 | 20,2 | 1,1 | 15,6 | OK | OK |
| | B11 | M24 8.8 - 1 | CO11(58) | 164,4 | 13,8 | 324,2 | 80,9 | 10,1 | 67,9 | OK | OK |
| | B12 | M24 8.8 - 1 | CO11(58) | 168,1 | 11,2 | 324,2 | 82,7 | 8,2 | 67,3 | OK | OK |
| | B13 | M24 8.8 - 1 | CO11(58) | 47,4 | 17,0 | 411,6 | 23,3 | 12,5 | 29,2 | OK | OK |
| | B14 | M24 8.8 - 1 | CO11(58) | 49,8 | 16,7 | 411,6 | 24,5 | 12,3 | 29,8 | OK | OK |
| | B15 | M24 8.8 - 1 | CO11(17) | 11,9 | 17,7 | 411,6 | 5,9 | 13,1 | 17,2 | OK | OK |
| | B16 | M24 8.8 - 1 | CO11(17) | 10,1 | 18,2 | 411,6 | 5,0 | 13,4 | 16,9 | OK | OK |
| | B17 | M24 8.8 - 1 | CO11(16) | 76,7 | 11,6 | 411,6 | 37,7 | 8,6 | 35,5 | OK | OK |
| | B18 | M24 8.8 - 1 | CO11(13) | 81,5 | 10,3 | 411,6 | 40,1 | 7,6 | 36,2 | OK | OK |
| | B19 | M24 8.8 - 1 | CO11(16) | 100,4 | 16,7 | 411,6 | 49,4 | 12,3 | 47,6 | OK | OK |
| | B20 | M24 8.8 - 1 | CO11(13) | 100,6 | 14,5 | 411,6 | 49,5 | 10,7 | 46,0 | OK | OK |
| 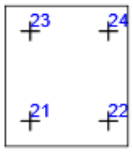 | B21 | M20 8.8 - 2 | CO9(55) | 32,7 | 3,5 | 267,3 | 23,2 | 3,7 | 20,2 | OK | OK |
| | B22 | M20 8.8 - 2 | CO11(48) | 77,5 | 9,5 | 267,3 | 54,9 | 10,1 | 49,3 | OK | OK |
| | B23 | M20 8.8 - 2 | CO9(55) | 40,7 | 5,4 | 267,3 | 28,8 | 5,7 | 26,3 | OK | OK |
| | B24 | M20 8.8 - 2 | CO11(48) | 76,4 | 9,8 | 267,3 | 54,2 | 10,4 | 49,1 | OK | OK |
| 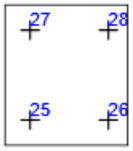 | B25 | M20 8.8 - 2 | CO11(52) | 0,0 | 13,6 | 267,3 | 0,0 | 14,5 | 14,5 | OK | OK |
| | B26 | M20 8.8 - 2 | CO11(52) | 105,4 | 13,7 | 267,3 | 74,7 | 14,6 | 67,9 | OK | OK |
| | B27 | M20 8.8 - 2 | CO11(52) | 0,0 | 14,0 | 267,3 | 0,0 | 14,9 | 14,9 | OK | OK |
| | B28 | M20 8.8 - 2 | CO11(52) | 104,4 | 13,9 | 267,3 | 74,0 | 14,8 | 67,6 | OK | OK |
| 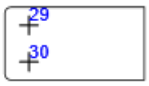 | B29 | M16 8.8 - 3 | CO9(55) | 4,0 | 32,3 | 116,1 | 4,4 | 53,6 | 56,8 | OK | OK |
| | B30 | M16 8.8 - 3 | CO9(55) | 4,6 | 7,3 | 116,1 | 5,0 | 12,1 | 15,7 | OK | OK |

### Bemessungsdaten

| Klasse | $F_{t,Rd}$ [kN] | $B_{p,Rd}$ [kN] | $F_{v,Rd}$ [kN] |
|---|---|---|---|
| M24 8.8 - 1 | 203,3 | 491,2 | 135,6 |
| M20 8.8 - 2 | 141,1 | 469,4 | 94,1 |
| M16 8.8 - 3 | 90,4 | 187,5 | 60,3 |

### Erläuterung von Symbolen

| | |
|---|---|
| $F_{t,Ed}$ | Zugkraft |
| $F_{v,Ed}$ | Resultierende der Schraubenscherkräfte Vy und Vz in Scherebenen |
| $F_{b,Rd}$ | Lochleibungstragfähigkeit der Platte nach EN 1993-1-8 Tab. 3.4 |
| $Ut_t$ | Ausnutzung unter Zug |
| $Ut_s$ | Ausnutzung unter Schub |
| $Ut_{ts}$ | Interaktion von Zug und Schub EN_1993-1-8 Tabelle 3.4 |
| $F_{t,Rd}$ | Zugtragfähigkeit der Schraube nach EN 1993-1-8 Tabelle 3.4 |
| $B_{p,Rd}$ | Durchstanztragfähigkeit nach EN 1993-1-8 Tabelle 3.4 |
| $F_{v,Rd}$ | Schertragfähigkeit der Schraube nach EN 1993-1-8 Tabelle 3.4 |

## Schweißnähte

| Position | Kante | $T_w$ [mm] | L [mm] | Lasten | $\sigma_{w,Ed}$ [MPa] | $\varepsilon_{Pl}$ [%] | $\sigma_{\perp}$ [MPa] | $\tau_{\perp}$ [MPa] | $\tau_{\parallel}$ [MPa] | Ut [%] | $Ut_c$ [%] | Konstruktionsregeln | Status |
|---|---|---|---|---|---|---|---|---|---|---|---|---|---|
| Stirnblech1 | 266-bfl 1 | ◢ 6,0 ◣ | 180 | CO11(58) | 119,2 | 0,0 | 75,8 | 41,7 | -32,8 | 27,4 | 21,5 | OK | OK |
| | | ◢ 6,0 ◣ | 180 | CO11(59) | 93,7 | 0,0 | -60,5 | -38,8 | -14,1 | 21,5 | 13,0 | OK | OK |
| Stirnblech1 | 266-tfl 1 | ◢ 6,0 ◣ | 180 | CO11(58) | 398,3 | 0,0 | -186,9 | -173,6 | -105,3 | 91,4 | 69,1 | OK | OK |
| | | ◢ 6,0 ◣ | 180 | CO11(58) | 397,3 | 0,0 | -168,9 | 184,8 | 94,6 | 91,2 | 69,9 | OK | OK |
| Stirnblech1 | 266-w 1 | ◢ 6,0 ◣ | 384 | CO11(58) | 158,8 | 0,0 | 73,2 | 75,3 | -30,8 | 36,5 | 21,7 | OK | OK |
| | | ◢ 6,0 ◣ | 384 | CO11(58) | 176,0 | 0,0 | 81,8 | -79,6 | 41,9 | 40,4 | 23,0 | OK | OK |
| Stirnblech1 | Verstärkung1 | ◢ 6,0 ◣ | 130 | CO11(22) | 427,0 | 0,1 | -179,0 | -180,1 | 132,9 | 98,0 | 65,9 | OK | OK |
| | | ◢ 6,0 ◣ | 130 | CO11(22) | 427,0 | 0,1 | -179,9 | 178,8 | -134,2 | 98,0 | 67,9 | OK | OK |
| 266-tfl 1 | Verstärkung1 | ◢ 6,0 ◣ | 299 | CO11(57) | 427,0 | 0,1 | -106,3 | -106,4 | -213,8 | 98,0 | 60,9 | OK | OK |
| | | ◢ 6,0 ◣ | 299 | CO11(57) | 427,0 | 0,1 | -106,3 | 106,2 | 213,8 | 98,0 | 60,9 | OK | OK |
| Stirnblech2 | 268-bfl 1 | ◢ 6,0 ◣ | 180 | CO11(58) | 238,9 | 0,0 | 145,6 | 84,8 | 69,0 | 54,9 | 43,5 | OK | OK |
| | | ◢ 6,0 ◣ | 180 | CO11(59) | 215,7 | 0,0 | -118,1 | -94,0 | 45,0 | 49,5 | 39,7 | OK | OK |
| Stirnblech2 | 268-tfl 1 | ◢ 6,0 ◣ | 180 | CO11(17) | 418,8 | 0,0 | -184,7 | -197,9 | 88,9 | 96,2 | 70,7 | OK | OK |
| | | ◢ 6,0 ◣ | 180 | CO11(57) | 385,1 | 0,0 | -183,6 | 168,4 | 99,3 | 88,4 | 68,2 | OK | OK |
| Stirnblech2 | 268-w 1 | ◢ 6,0 ◣ | 386 | CO11(58) | 254,2 | 0,0 | 120,8 | 122,3 | -41,4 | 58,4 | 39,3 | OK | OK |
| | | ◢ 6,0 ◣ | 386 | CO11(17) | 253,7 | 0,0 | 127,6 | -126,2 | 9,5 | 58,2 | 41,5 | OK | OK |
| Stirnblech2 | Verstärkung2 | ◢ 6,0 ◣ | 130 | CO11(17) | 432,2 | 3,1 | -207,1 | -206,9 | 71,8 | 99,2 | 91,0 | OK | OK |
| | | ◢ 6,0 ◣ | 130 | CO11(17) | 432,1 | 3,0 | -206,5 | 206,9 | -72,4 | 99,2 | 90,9 | OK | OK |
| 268-tfl 1 | Verstärkung2 | ◢ 6,0 ◣ | 300 | CO11(17) | 427,2 | 0,2 | -115,3 | -115,7 | -207,4 | 98,1 | 69,2 | OK | OK |
| | | ◢ 6,0 ◣ | 300 | CO11(17) | 427,2 | 0,2 | -115,9 | 115,7 | 207,3 | 98,1 | 70,2 | OK | OK |
| 349-bfl 1 | Rippe1a | ◢ 6,0 ◣ | 101 | CO11(16) | 181,4 | 0,0 | -80,8 | -89,9 | 26,7 | 41,7 | 33,8 | OK | OK |

| Position | Kante | $T_w$ [mm] | L [mm] | Lasten | $\sigma_{w,Ed}$ [MPa] | $\varepsilon_{Pl}$ [%] | $\sigma_{\perp}$ [MPa] | $\tau_{\perp}$ [MPa] | $\tau_{\parallel}$ [MPa] | Ut [%] | $Ut_c$ [%] | Konstruktionsregeln | Status |
|---|---|---|---|---|---|---|---|---|---|---|---|---|---|
| | | ◢ 6,0 ◣ | 101 | CO11(17) | 272,6 | 0,0 | 146,0 | -123,9 | 48,0 | 62,6 | 38,6 | OK | OK |
| 349-w 1 | Rippe1a | ◢ 6,0 ◣ | 176 | CO11(58) | 80,6 | 0,0 | 47,2 | 32,5 | 19,1 | 18,5 | 12,0 | OK | OK |
| | | ◢ 6,0 ◣ | 176 | CO11(61) | 66,6 | 0,0 | 4,7 | -19,6 | -33,0 | 15,3 | 11,3 | OK | OK |
| 349-tfl 1 | Rippe1a | ◢ 6,0 ◣ | 101 | CO11(58) | 94,1 | 0,0 | 12,8 | -7,1 | 53,3 | 21,6 | 17,3 | OK | OK |
| | | ◢ 6,0 ◣ | 101 | CO11(17) | 191,4 | 0,0 | 105,0 | -92,4 | -1,8 | 44,0 | 27,4 | OK | OK |
| 349-bfl 1 | Rippe1b | ◢ 6,0 ◣ | 101 | CO11(17) | 284,5 | 0,0 | 155,9 | 132,2 | -37,5 | 65,3 | 44,2 | OK | OK |
| | | ◢ 6,0 ◣ | 101 | CO11(58) | 191,4 | 0,0 | 17,2 | 33,7 | 104,8 | 44,0 | 28,1 | OK | OK |
| 349-w 1 | Rippe1b | ◢ 6,0 ◣ | 176 | CO11(58) | 73,4 | 0,0 | 6,3 | 20,8 | 36,7 | 16,9 | 12,1 | OK | OK |
| | | ◢ 6,0 ◣ | 176 | CO11(58) | 82,3 | 0,0 | 45,4 | -30,9 | -24,8 | 18,9 | 13,9 | OK | OK |
| 349-tfl 1 | Rippe1b | ◢ 6,0 ◣ | 101 | CO11(17) | 195,9 | 0,0 | 110,3 | 93,3 | -5,9 | 45,0 | 29,2 | OK | OK |
| | | ◢ 6,0 ◣ | 101 | CO11(58) | 112,0 | 0,0 | -5,2 | 30,9 | -56,7 | 25,7 | 20,6 | OK | OK |
| 349-bfl 1 | Rippe1c | ◢ 6,0 ◣ | 101 | CO11(17) | 370,0 | 0,0 | -162,9 | -191,2 | 15,7 | 84,9 | 49,5 | OK | OK |
| | | ◢ 6,0 ◣ | 101 | CO11(17) | 426,9 | 0,0 | -224,4 | 208,6 | -21,1 | 98,0 | 59,6 | OK | OK |
| 349-w 1 | Rippe1c | ◢ 6,0 ◣ | 176 | CO11(57) | 146,7 | 0,0 | 6,5 | -2,6 | -84,5 | 33,7 | 23,5 | OK | OK |
| | | ◢ 6,0 ◣ | 176 | CO11(57) | 146,0 | 0,0 | -16,2 | 7,1 | 83,5 | 33,5 | 23,6 | OK | OK |
| 349-tfl 1 | Rippe1c | ◢ 6,0 ◣ | 101 | CO11(17) | 388,9 | 0,0 | -206,1 | -189,8 | -14,5 | 89,3 | 48,8 | OK | OK |
| | | ◢ 6,0 ◣ | 101 | CO11(17) | 357,9 | 0,0 | -162,9 | 183,9 | 6,3 | 82,2 | 43,6 | OK | OK |
| 349-bfl 1 | Rippe1d | ◢ 6,0 ◣ | 101 | CO11(57) | 426,9 | 0,0 | -224,5 | -208,6 | 20,5 | 98,0 | 59,7 | OK | OK |
| | | ◢ 6,0 ◣ | 101 | CO11(57) | 349,8 | 0,0 | -157,1 | 180,2 | -9,8 | 80,3 | 47,3 | OK | OK |
| 349-w 1 | Rippe1d | ◢ 6,0 ◣ | 176 | CO11(17) | 149,9 | 0,0 | -19,0 | -8,7 | -85,4 | 34,4 | 24,3 | OK | OK |
| | | ◢ 6,0 ◣ | 176 | CO11(17) | 153,2 | 0,0 | 7,7 | 2,6 | 88,3 | 35,2 | 24,3 | OK | OK |
| 349-tfl 1 | Rippe1d | ◢ 6,0 ◣ | 101 | CO11(57) | 359,2 | 0,0 | -165,2 | -184,0 | -6,4 | 82,5 | 43,8 | OK | OK |

| Position | Kante | $T_w$ [mm] | L [mm] | Lasten | $\sigma_{w,Ed}$ [MPa] | $\varepsilon_{Pl}$ [%] | $\sigma_{\perp}$ [MPa] | $\tau_{\perp}$ [MPa] | $\tau_{\parallel}$ [MPa] | Ut [%] | $Ut_c$ [%] | Konstruktionsregeln | Status |
|---|---|---|---|---|---|---|---|---|---|---|---|---|---|
| | | ◢ 6,0 ◣ | 101 | CO11(57) | 387,9 | 0,0 | -204,2 | 189,8 | 15,1 | 89,0 | 48,4 | OK | OK |
| Verschobene Stirnplatte1a | 349-tfl 1 | ◢ 6,0 ◣ | 218 | CO11(61) | 238,9 | 0,0 | 30,6 | 31,7 | 133,1 | 54,8 | 40,9 | OK | OK |
| | | ◢ 6,0 ◣ | 218 | CO11(40) | 427,3 | 0,3 | -310,8 | -164,4 | -40,2 | 98,1 | 76,7 | OK | OK |
| Verschobene Stirnplatte1a | 349-bfl 1 | ◢ 6,0 ◣ | 218 | CO11(50) | 427,3 | 0,2 | -308,2 | 169,7 | 19,5 | 98,1 | 75,0 | OK | OK |
| | | ◢ 6,0 ◣ | 218 | CO11(61) | 178,1 | 0,0 | -39,4 | 59,9 | -80,4 | 40,9 | 28,0 | OK | OK |
| Verschobene Stirnplatte1b | 205-bfl 1 | ◢ 6,0 ◣ | 100 | CO11(48) | 405,2 | 0,0 | 111,6 | 96,8 | 203,0 | 93,0 | 58,5 | OK | OK |
| | | ◢ 6,0 ◣ | 100 | CO11(48) | 427,0 | 0,1 | 263,5 | 123,3 | -149,7 | 98,0 | 65,3 | OK | OK |
| Verschobene Stirnplatte1b | 205-tfl 1 | ◢ 6,0 ◣ | 100 | CO11(48) | 427,2 | 0,2 | -153,2 | -132,0 | 188,7 | 98,1 | 71,8 | OK | OK |
| | | ◢ 6,0 ◣ | 100 | CO11(48) | 427,0 | 0,1 | -128,7 | 157,4 | -174,6 | 98,0 | 62,1 | OK | OK |
| Verschobene Stirnplatte1b | 205-w 1 | ◢ 6,0 ◣ | 189 | CO11(48) | 94,8 | 0,0 | 47,7 | -47,2 | -1,7 | 21,8 | 14,9 | OK | OK |
| | | ◢ 6,0 ◣ | 190 | CO11(48) | 105,3 | 0,0 | -37,7 | -40,2 | 40,1 | 24,2 | 15,8 | OK | OK |
| Verschobene Stirnplatte2a | 349-tfl 1 | ◢ 6,0 ◣ | 219 | CO11(58) | 317,0 | 0,0 | 12,9 | 29,7 | -180,4 | 72,8 | 52,8 | OK | OK |
| | | ◢ 6,0 ◣ | 218 | CO11(45) | 428,0 | 0,7 | -304,0 | -173,7 | 10,4 | 98,3 | 90,9 | OK | OK |
| Verschobene Stirnplatte2a | 349-bfl 1 | ◢ 6,0 ◣ | 218 | CO11(52) | 428,0 | 0,7 | -306,4 | 172,5 | 0,9 | 98,3 | 90,1 | OK | OK |
| | | ◢ 6,0 ◣ | 218 | CO11(58) | 239,3 | 0,0 | -56,9 | 79,1 | 108,4 | 54,9 | 37,7 | OK | OK |
| Verschobene Stirnplatte2b | 500-bfl 1 | ◢ 6,0 ◣ | 100 | CO11(52) | 427,7 | 0,5 | 126,5 | 95,5 | -215,7 | 98,2 | 74,5 | OK | OK |
| | | ◢ 6,0 ◣ | 100 | CO11(52) | 427,9 | 0,6 | 252,7 | 121,9 | 157,8 | 98,3 | 78,0 | OK | OK |
| Verschobene Stirnplatte2b | 500-tfl 1 | ◢ 6,0 ◣ | 99 | CO11(52) | 427,6 | 0,4 | -154,3 | -135,5 | -186,1 | 98,2 | 81,8 | OK | OK |
| | | ◢ 6,0 ◣ | 100 | CO11(52) | 427,3 | 0,2 | -128,9 | 155,7 | 176,3 | 98,1 | 65,5 | OK | OK |
| Verschobene Stirnplatte2b | 500-w 1 | ◢ 6,0 ◣ | 189 | CO11(52) | 136,5 | 0,0 | 68,2 | -68,2 | 3,6 | 31,3 | 20,3 | OK | OK |
| | | ◢ 6,0 ◣ | 189 | CO11(52) | 136,2 | 0,0 | 67,8 | 68,0 | -5,0 | 31,3 | 20,9 | OK | OK |
| 266-w 1 | Verbindungsblech1a | ◢ 4,0 ◣ | 199 | CO11(17) | 171,7 | 0,0 | 41,3 | 46,9 | 84,0 | 39,4 | 23,7 | OK | OK |

| Position | Kante | $T_w$ [mm] | L [mm] | Lasten | $\sigma_{w,Ed}$ [MPa] | $\varepsilon_{Pl}$ [%] | $\sigma_{\perp}$ [MPa] | $\tau_{\perp}$ [MPa] | $\tau_{\parallel}$ [MPa] | Ut [%] | $Ut_c$ [%] | Konstruktionsregeln | Status |
|---|---|---|---|---|---|---|---|---|---|---|---|---|---|
| | | ◢ 4,0 ◣ | 199 | CO11(17) | 143,0 | 0,0 | 41,8 | -36,2 | -70,2 | 32,8 | 19,9 | OK | OK |
| Stirnblech1 | Verbindungsblech1a | ◢ 4,0 ◣ | 80 | CO9(55) | 97,4 | 0,0 | 40,0 | 31,4 | -40,5 | 22,4 | 16,9 | **Nicht OK!** | OK |
| | | ◢ 4,0 ◣ | 80 | CO9(55) | 118,1 | 0,0 | 37,5 | -47,0 | 44,4 | 27,1 | 21,5 | **Nicht OK!** | OK |
| Verbindungsblech1b | 510-arc 2 | ◢ 4,0 | 119 | CO9(55) | 194,1 | 0,0 | -42,5 | 6,3 | -109,1 | 44,6 | 26,0 | OK | OK |
| Verbindungsblech1b | 510-arc 32 | ◢ 4,0 | 119 | CO9(55) | 77,9 | 0,0 | 43,8 | -16,6 | 33,3 | 17,9 | 12,8 | OK | OK |
| Verbindungsblech1b | 510-arc 34 | ◢ 4,0 | 119 | CO9(55) | 65,1 | 0,0 | -30,2 | -1,6 | -33,3 | 15,0 | 9,3 | OK | OK |
| Verbindungsblech1b | 510-arc 64 | ◢ 4,0 | 119 | CO9(55) | 202,4 | 0,0 | -24,4 | 9,5 | 115,6 | 46,5 | 32,8 | OK | OK |

**Bemessungsdaten**

| Material | $f_u$ [MPa] | $\beta_w$ [-] | $\sigma_{w,Rd}$ [MPa] | 0.9 σ [MPa] |
|---|---|---|---|---|
| S 355 | 490,0 | 0,90 | 435,6 | 352,8 |

**Erläuterung von Symbolen**

| | |
|---|---|
| $T_w$ | Nahtdicke a |
| L | Länge |
| $\sigma_{w,Ed}$ | Vergleichsspannung |
| $\varepsilon_{Pl}$ | Dehnung |
| $\sigma_{\perp}$ | Senkrechte Spannung |
| $\tau_{\perp}$ | Scherspannung senkrecht zur Schweißnahtachse |
| $\tau_{\parallel}$ | Scherspannung parallel zur Schweißnahtachse |
| Ut | Ausnutzung |
| $Ut_c$ | Schätzung der Schweißnahtkapazität |
| ◢ | Kehlnaht |
| $f_u$ | Grenzfestigkeit der Schweißnaht |
| $\beta_w$ | Korrelationsfaktor nach EN 1993-1-8 Tab. 4.1 |
| $\sigma_{w,Rd}$ | Tragfähigkeit der Schweißnaht |
| 0.9 σ | Senkrechter Spannungswiderstand - 0.9*fu / γM2 |

## Beulen

**Die Beulanalyse wurde nicht berechnet.**

## Normeinstellungen

| Position | Wert | Einheit | Bezug |
|---|---|---|---|
| Sicherheitsfaktor $\gamma_{M0}$ | 1,00 | - | EN 1993-1-1 – 6.1 |
| Sicherheitsfaktor $\gamma_{M1}$ | 1,00 | - | EN 1993-1-1 – 6.1 |
| Sicherheitsfaktor $\gamma_{M2}$ | 1,25 | - | EN 1993-1-1 – 6.1 |
| Sicherheitsfaktor $\gamma_{M3}$ | 1,25 | - | EN 1993-1-8 – Table 2.1 |
| Sicherheitsfaktor $\gamma_{C}$ | 1,50 | - | EN 1992-1-1 – 2.4.2.4 |
| Sicherheitsfaktor $\gamma_{Inst}$ | 1,20 | - | EN 1992-4 – Table 4.1 |
| Verbindungskoeffizient βj | 0,67 | - | EN 1993-1-8 – 6.2.5(7) |
| Wirksame Fläche - Einfluss der Netzgröße | 0,10 | - | |
| Reibungsbeiwert - Beton | 0,25 | - | EN 1993-1-8 |
| Reibungskoeffizient bei gleitfesten Verbindungen | 0,30 | - | EN 1993-1-8 – Table 3.7 |
| Plastische Dehnung - Grenzwert | 0,05 | - | EN 1993-1-5 |
| Konstruktionsregeln | Ja | | |
| Distance between bolts [d0] | 2,20 | - | EN 1993-1-8 – Table 3.3 |
| Distance between bolts and edge [d0] | 1,20 | - | EN 1993-1-8 – Table 3.3 |
| Nachweis der Tragfähigkeit bei Betonausbruch | Beide | | |
| Berechnetes αb für Lochleibungsnachweis anwenden. | Ja | | EN 1993-1-8 – Table 3.4 |
| Gerissener Beton | Ja | | EN 1992-4 |
| Überprüfen der lokalen Verformung | Ja | | |
| Lokale Verformung - Grenzwert | 0,03 | - | CIDECT DG 1, 3 – 1.1 |
| Geometrische Nichtlinearität (GMNA) | Ja | | Analyse mit großen Verformungen für Verbindungen mit Hohlprofilen |
| Ausgesteiftes System | Nein | | EN 1993-1-8 – 5.2.2.5 |

| | |
|---|---|
| **Projekt:** | **IdeaStatiCa-Stadion_Fazanerija_JK-5_BR - 97** |
| **Projektnummer:** | **Detajl D5-O3** |
| **Autor:** | **mag. Igor Gorup dipl. ing.** |

## Projektdaten

| | |
|---|---|
| Projektname | IdeaStatiCa-Stadion_Fazanerija_JK-5_BR - 97 |
| Projektnummer | Detajl D5-O3 |
| Autor | mag. Igor Gorup dipl. ing. |
| Beschreibung | |
| Datum | 14.06.2025 |
| Norm | EN |

## Material

| | |
|---|---|
| Stahl | Baustahl S 355, Baustahl S 235, S 355 |

# Projektposition 97

## Bemessung

| | |
|---|---|
| Name | 97 |
| Beschreibung | |
| Berechnung | Spannung, Dehnung/ Lasten im Gleichgewicht |

### Bauteile

#### Geometrie

| Name | Querschnitt | β – Rotation [°] | Y - Rotation [°] | α - Rotation [°] | Abstand ex [mm] | Abstand ey [mm] | Abstand ez [mm] |
|---|---|---|---|---|---|---|---|
| 116 | 294 - HEB260 | 48,8 | 90,0 | -138,8 | 0 | 0 | 0 |
| 208 | 443 - IPE200 | 0,0 | 0,0 | -180,0 | 0 | 0 | -100 |
| 268 | 288 - IPE400 | 90,0 | 3,5 | 180,0 | 0 | 0 | 0 |
| 499 | 443 - IPE200 | 0,0 | 0,0 | -180,0 | 0 | 0 | -100 |
| 507 | 442 - RO101.6X2.9 | 38,0 | 2,2 | 180,0 | 0 | 60 | -100 |
| 519 | 335 - RO76.1X2.9 | 142,0 | 2,2 | -180,0 | 0 | -60 | -100 |

#### Auflager und Kräfte

| Name | Auflager | Kräfte in | X [mm] |
|---|---|---|---|
| 116 / anfang | N-Vy-Vz-Mx-My-Mz | Position | 0 |
| 116 / ende | | Position | 0 |
| 208 / ende | | Position | 0 |
| 268 / ende | | Position | 0 |
| 499 / anfang | | Position | 0 |
| 507 / ende | Mx-My-Mz | Schrauben | 0 |
| 519 / ende | Mx-My-Mz | Schrauben | 0 |

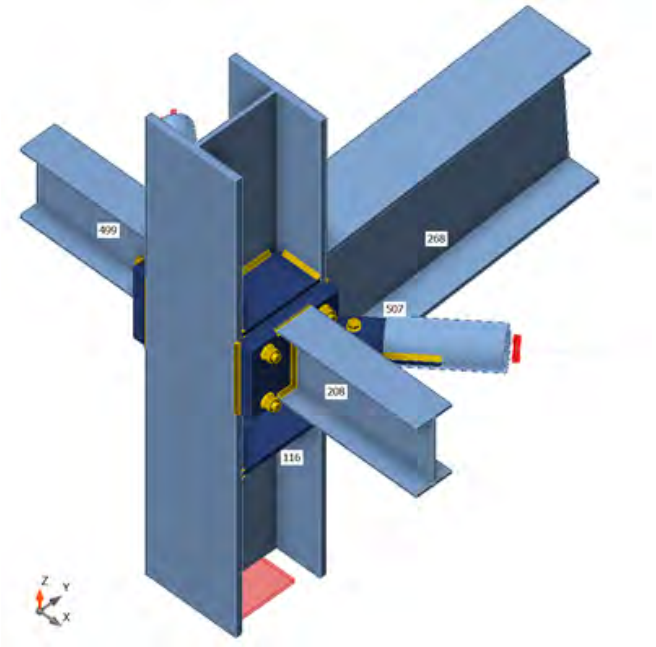


### Querschnitte

| Name | Material |
|---|---|
| 294 - HEB260 | Baustahl S 355 |
| 443 - IPE200 | S 355 |
| 288 - IPE400 | Baustahl S 355 |
| 442 - RO101.6X2.9 | Baustahl S 355 |
| 335 - RO76.1X2.9 | Baustahl S 355 |

## Schrauben

| Name | Durchmesser [mm] | $f_y$ [MPa] | $f_u$ [MPa] | Bruttofläche [$mm^2$] |
|---|---|---|---|---|
| M24 8.8 | 24 | 640,0 | 800,0 | 452 |
| M20 8.8 | 20 | 640,0 | 800,0 | 314 |
| M16 8.8 | 16 | 640,0 | 800,0 | 201 |

## Lasteinwirkungen (Kräfte im Gleichgewicht)

| Name | Bauteil | N [kN] | Vy [kN] | Vz [kN] | Mx [kNm] | My [kNm] | Mz [kNm] |
|---|---|---|---|---|---|---|---|
| CO9(58) | 116 / Anfang | -62,5 | -14,3 | -22,2 | 0,0 | -87,9 | 21,0 |
| | 116 / Ende | 6,2 | 14,0 | -2,7 | -0,1 | 4,7 | -4,7 |
| | 208 / Ende | -5,5 | 0,0 | -2,5 | 0,0 | 8,7 | 0,2 |
| | 268 / Ende | 55,2 | -2,0 | -54,6 | 0,8 | 83,2 | -0,2 |
| | 499 / Anfang | 10,5 | 0,0 | 2,3 | 0,0 | 8,3 | 0,0 |
| | 507 / Ende | -26,1 | 0,0 | 0,0 | 0,0 | 0,0 | 0,0 |
| | 519 / Ende | -20,9 | 0,0 | 0,0 | 0,0 | 0,0 | 0,0 |
| CO11(59) | 116 / Anfang | -368,6 | -0,3 | -7,8 | 0,0 | -44,1 | -0,6 |
| | 116 / Ende | 268,6 | 6,9 | 392,8 | 0,0 | -203,9 | 2,7 |
| | 208 / Ende | -5,8 | -0,2 | 18,3 | 0,0 | -23,1 | -0,3 |
| | 268 / Ende | -387,8 | 0,2 | -161,8 | -0,6 | 248,0 | -0,1 |
| | 499 / Anfang | 1,1 | -0,2 | 18,8 | 0,0 | 24,6 | 0,3 |
| | 507 / Ende | 7,5 | 0,0 | 0,2 | 0,0 | 0,0 | 0,0 |
| | 519 / Ende | 10,1 | 0,0 | 0,1 | 0,0 | 0,0 | 0,0 |
| CO11(60) | 116 / Anfang | -523,5 | -11,5 | -9,7 | 0,0 | -25,6 | 14,4 |
| | 116 / Ende | 406,1 | 15,1 | 519,2 | -0,6 | -281,8 | -1,4 |
| | 208 / Ende | -11,8 | -0,2 | 23,9 | 0,0 | -26,5 | -0,2 |
| | 268 / Ende | -487,0 | -0,9 | -201,9 | 0,5 | 307,5 | -0,6 |
| | 499 / Anfang | 7,9 | -0,3 | 27,7 | 0,0 | 39,9 | 0,3 |
| | 507 / Ende | -9,4 | 0,0 | 0,2 | 0,0 | 0,0 | 0,0 |
| | 519 / Ende | -11,0 | 0,0 | 0,2 | 0,0 | 0,0 | 0,0 |
| CO11(61) | 116 / Anfang | 184,7 | 2,4 | 17,7 | 0,0 | 80,2 | -4,1 |
| | 116 / Ende | -94,2 | 0,2 | -101,6 | 0,0 | 58,4 | 1,8 |
| | 208 / Ende | 1,0 | 0,2 | 3,2 | 0,0 | -4,0 | 0,1 |
| | 268 / Ende | 72,2 | 0,5 | 89,1 | -0,1 | -138,6 | 0,0 |
| | 499 / Anfang | -4,0 | 0,2 | 2,6 | 0,0 | 1,7 | -0,1 |
| | 507 / Ende | 5,4 | 0,0 | 0,2 | 0,0 | 0,0 | 0,0 |
| | 519 / Ende | 5,5 | 0,0 | 0,2 | 0,0 | 0,0 | 0,0 |
| CO11(62) | 116 / Anfang | 15,0 | -6,6 | 12,0 | 0,1 | 74,0 | 8,5 |
| | 116 / Ende | 37,8 | 7,0 | 43,7 | 0,0 | -23,7 | -1,5 |
| | 208 / Ende | -4,2 | 0,2 | 8,6 | 0,0 | -7,9 | 0,1 |
| | 268 / Ende | -42,1 | -0,2 | 29,6 | 0,5 | -50,3 | 0,1 |
| | 499 / Anfang | 2,1 | 0,2 | 10,8 | 0,0 | 15,4 | -0,1 |
| | 507 / Ende | -11,1 | 0,0 | 0,2 | 0,0 | 0,0 | 0,0 |
| | 519 / Ende | -13,5 | 0,0 | 0,2 | 0,0 | 0,0 | 0,0 |
| CO11(63) | 116 / Anfang | 210,0 | 3,5 | 17,1 | 0,0 | 76,5 | -5,4 |
| | 116 / Ende | -117,4 | -1,7 | -136,8 | 0,0 | 76,1 | 1,8 |
| | 208 / Ende | 2,3 | 0,2 | 0,8 | 0,0 | -1,4 | 0,1 |
| | 268 / Ende | 107,5 | 0,4 | 98,7 | -0,1 | -152,6 | 0,0 |
| | 499 / Anfang | -4,8 | 0,2 | -0,2 | 0,0 | -2,2 | -0,1 |
| | 507 / Ende | 5,5 | 0,0 | 0,2 | 0,0 | 0,0 | 0,0 |
| | 519 / Ende | 5,3 | 0,0 | 0,1 | 0,0 | 0,0 | 0,0 |
| CO11(64) | 116 / Anfang | -430,7 | -12,3 | -1,0 | 0,1 | 15,1 | 15,8 |
| | 116 / Ende | 355,1 | 15,7 | 444,9 | -0,5 | -243,1 | -1,8 |
| | 208 / Ende | -11,6 | -0,1 | 21,6 | 0,0 | -23,1 | -0,1 |
| | 268 / Ende | -423,8 | -0,8 | -151,4 | 0,4 | 228,0 | -0,5 |
| | 499 / Anfang | 7,8 | -0,2 | 25,7 | 0,0 | 37,5 | 0,3 |
| | 507 / Ende | -9,7 | 0,0 | 0,2 | 0,0 | 0,0 | 0,0 |
| | 519 / Ende | -11,2 | 0,0 | 0,2 | 0,0 | 0,0 | 0,0 |
| CO11(65) | 116 / Anfang | 67,0 | 2,0 | 18,8 | 0,0 | 86,5 | -3,7 |
| | 116 / Ende | -0,2 | 1,9 | 25,2 | 0,0 | -8,9 | 2,2 |
| | 208 / Ende | 0,5 | 0,1 | 8,1 | 0,0 | -10,2 | 0,0 |
| | 268 / Ende | -53,1 | 0,5 | 47,8 | -0,2 | -77,6 | 0,0 |

| Name | Bauteil | N [kN] | Vy [kN] | Vz [kN] | Mx [kNm] | My [kNm] | Mz [kNm] |
|---|---|---|---|---|---|---|---|
| | 499 / Anfang | -4,8 | 0,2 | 7,7 | 0,0 | 8,6 | -0,1 |
| | 507 / Ende | 5,1 | 0,0 | 0,2 | 0,0 | 0,0 | 0,0 |
| | 519 / Ende | 5,3 | 0,0 | 0,2 | 0,0 | 0,0 | 0,0 |
| CO11(66) | 116 / Anfang | 178,2 | -6,9 | 10,9 | 0,1 | 68,0 | 9,2 |
| | 116 / Ende | -92,7 | 6,3 | -114,8 | 0,1 | 66,4 | -2,0 |
| | 208 / Ende | -4,5 | 0,2 | 1,8 | 0,0 | 1,1 | 0,2 |
| | 268 / Ende | 112,9 | -0,1 | 85,6 | 0,5 | -134,3 | 0,1 |
| | 499 / Anfang | 4,1 | 0,2 | 3,9 | 0,0 | 6,5 | -0,1 |
| | 507 / Ende | -10,5 | 0,0 | 0,2 | 0,0 | 0,0 | 0,0 |
| | 519 / Ende | -12,0 | 0,0 | 0,2 | 0,0 | 0,0 | 0,0 |
| CO11(67) | 116 / Anfang | -523,8 | -10,0 | -9,9 | 0,0 | -26,0 | 12,5 |
| | 116 / Ende | 406,1 | 13,6 | 519,7 | -0,5 | -282,2 | -1,1 |
| | 208 / Ende | -10,1 | -0,2 | 24,1 | 0,0 | -27,3 | -0,2 |
| | 268 / Ende | -487,4 | -0,9 | -202,3 | 0,5 | 308,2 | -0,6 |
| | 499 / Anfang | 6,0 | -0,3 | 27,5 | 0,0 | 39,1 | 0,3 |
| | 507 / Ende | -9,3 | 0,0 | 0,2 | 0,0 | 0,0 | 0,0 |
| | 519 / Ende | -11,0 | 0,0 | 0,2 | 0,0 | 0,0 | 0,0 |
| CO11(68) | 116 / Anfang | -496,5 | -10,1 | -9,8 | 0,0 | -27,0 | 12,7 |
| | 116 / Ende | 382,3 | 13,1 | 483,8 | -0,5 | -264,2 | -1,3 |
| | 208 / Ende | -10,4 | -0,2 | 21,5 | 0,0 | -24,1 | -0,2 |
| | 268 / Ende | -452,2 | -0,9 | -191,1 | 0,5 | 291,2 | -0,5 |
| | 499 / Anfang | 7,0 | -0,2 | 24,9 | 0,0 | 35,8 | 0,3 |
| | 507 / Ende | -9,2 | 0,0 | 0,2 | 0,0 | 0,0 | 0,0 |
| | 519 / Ende | -10,8 | 0,0 | 0,2 | 0,0 | 0,0 | 0,0 |
| CO11(47) | 116 / Anfang | -488,1 | 1,2 | -1,9 | 0,0 | -11,7 | -2,6 |
| | 116 / Ende | 380,6 | 6,0 | 498,3 | 0,0 | -273,1 | 3,3 |
| | 208 / Ende | -4,2 | -0,2 | 23,2 | 0,0 | -30,1 | -0,3 |
| | 268 / Ende | -498,2 | 0,3 | -186,0 | -0,7 | 284,8 | 0,0 |
| | 499 / Anfang | -1,9 | -0,2 | 23,3 | 0,0 | 30,1 | 0,3 |
| | 507 / Ende | 7,9 | 0,0 | 0,2 | 0,0 | 0,0 | 0,0 |
| | 519 / Ende | 9,8 | 0,0 | 0,1 | 0,0 | 0,0 | 0,0 |
| CO11(49) | 116 / Anfang | -515,1 | 0,1 | -1,7 | 0,0 | -10,2 | -1,2 |
| | 116 / Ende | 404,5 | 7,9 | 533,9 | 0,0 | -290,9 | 3,3 |
| | 208 / Ende | -5,5 | -0,3 | 25,6 | 0,0 | -32,6 | -0,3 |
| | 268 / Ende | -533,7 | 0,3 | -196,7 | -0,7 | 301,1 | -0,1 |
| | 499 / Anfang | -1,1 | -0,3 | 26,1 | 0,0 | 34,0 | 0,4 |
| | 507 / Ende | 7,8 | 0,0 | 0,2 | 0,0 | 0,0 | 0,0 |
| | 519 / Ende | 9,9 | 0,0 | 0,1 | 0,0 | 0,0 | 0,0 |
| CO11(50) | 116 / Anfang | 16,3 | -7,9 | 12,3 | 0,1 | 75,9 | 10,3 |
| | 116 / Ende | 37,8 | 8,4 | 43,0 | 0,0 | -23,3 | -1,8 |
| | 208 / Ende | -5,9 | 0,2 | 8,4 | 0,0 | -7,2 | 0,1 |
| | 268 / Ende | -42,0 | -0,2 | 31,0 | 0,5 | -52,6 | 0,1 |
| | 499 / Anfang | 4,0 | 0,2 | 11,0 | 0,0 | 16,1 | -0,1 |
| | 507 / Ende | -11,1 | 0,0 | 0,2 | 0,0 | 0,0 | 0,0 |
| | 519 / Ende | -13,1 | 0,0 | 0,2 | 0,0 | 0,0 | 0,0 |
| CO11(53) | 116 / Anfang | -258,6 | -2,6 | 6,3 | 0,0 | 24,7 | 2,7 |
| | 116 / Ende | 221,0 | 9,0 | 300,0 | -0,1 | -161,6 | 2,0 |
| | 208 / Ende | -6,9 | -0,1 | 16,3 | 0,0 | -19,4 | -0,2 |
| | 268 / Ende | -312,1 | 0,3 | -90,9 | -0,6 | 136,9 | -0,1 |
| | 499 / Anfang | 2,1 | -0,1 | 17,5 | 0,0 | 23,5 | 0,2 |
| | 507 / Ende | 7,2 | 0,0 | 0,2 | 0,0 | 0,0 | 0,0 |
| | 519 / Ende | 9,5 | 0,0 | 0,1 | 0,0 | 0,0 | 0,0 |
| CO11(54) | 116 / Anfang | -222,1 | 2,4 | -8,0 | 0,0 | -49,0 | -4,0 |
| | 116 / Ende | 149,4 | 2,0 | 230,5 | 0,0 | -119,1 | 2,5 |

| Name | Bauteil | N [kN] | Vy [kN] | Vz [kN] | Mx [kNm] | My [kNm] | Mz [kNm] |
|---|---|---|---|---|---|---|---|
| | 208 / Ende | -2,5 | -0,2 | 11,3 | 0,0 | -15,0 | -0,2 |
| | 268 / Ende | -227,4 | 0,3 | -108,8 | -0,5 | 168,1 | 0,0 |
| | 499 / Anfang | -0,6 | -0,2 | 10,8 | 0,0 | 13,1 | 0,2 |
| | 507 / Ende | 7,7 | 0,0 | 0,2 | 0,0 | 0,0 | 0,0 |
| | 519 / Ende | 9,7 | 0,0 | 0,1 | 0,0 | 0,0 | 0,0 |
| CO11(57) | 116 / Anfang | 176,8 | -5,7 | 10,6 | 0,1 | 66,1 | 7,5 |
| | 116 / Ende | -92,7 | 4,8 | -114,1 | 0,1 | 66,0 | -1,8 |
| | 208 / Ende | -2,8 | 0,2 | 2,0 | 0,0 | 0,4 | 0,2 |
| | 268 / Ende | 112,9 | -0,1 | 84,2 | 0,5 | -132,1 | 0,1 |
| | 499 / Anfang | 2,3 | 0,2 | 3,7 | 0,0 | 5,8 | -0,1 |
| | 507 / Ende | -10,5 | 0,0 | 0,2 | 0,0 | 0,0 | 0,0 |
| | 519 / Ende | -12,4 | 0,0 | 0,2 | 0,0 | 0,0 | 0,0 |
| CO11(36) | 116 / Anfang | 92,4 | 3,1 | 18,2 | 0,0 | 82,9 | -5,1 |
| | 116 / Ende | -23,5 | 0,0 | -10,1 | 0,0 | 8,8 | 2,2 |
| | 208 / Ende | 1,8 | 0,1 | 5,7 | 0,0 | -7,7 | 0,0 |
| | 268 / Ende | -17,7 | 0,5 | 57,4 | -0,1 | -91,7 | 0,0 |
| | 499 / Anfang | -5,6 | 0,2 | 4,9 | 0,0 | 4,7 | -0,1 |
| | 507 / Ende | 5,3 | 0,0 | 0,2 | 0,0 | 0,0 | 0,0 |
| | 519 / Ende | 5,1 | 0,0 | 0,1 | 0,0 | 0,0 | 0,0 |
| CO11(37) | 116 / Anfang | 24,4 | 0,7 | 19,6 | 0,0 | 90,4 | -1,9 |
| | 116 / Ende | 36,2 | 3,6 | 55,9 | 0,0 | -31,3 | 2,0 |
| | 208 / Ende | -1,9 | 0,1 | 9,7 | 0,0 | -11,8 | 0,0 |
| | 268 / Ende | -84,1 | 0,5 | 36,0 | -0,2 | -59,1 | 0,0 |
| | 499 / Anfang | -2,5 | 0,1 | 9,8 | 0,0 | 11,7 | -0,1 |
| | 507 / Ende | 5,1 | 0,0 | 0,2 | 0,0 | 0,0 | 0,0 |
| | 519 / Ende | 5,5 | 0,0 | 0,2 | 0,0 | 0,0 | 0,0 |
| CO11(38) | 116 / Anfang | -230,5 | -6,5 | -15,6 | 0,0 | -63,8 | 8,3 |
| | 116 / Ende | 151,0 | 7,0 | 217,5 | -0,1 | -111,1 | -1,4 |
| | 208 / Ende | -6,5 | -0,1 | 9,9 | 0,0 | -10,3 | -0,1 |
| | 268 / Ende | -184,8 | -0,6 | -114,1 | 0,4 | 174,9 | -0,2 |
| | 499 / Anfang | 5,9 | -0,1 | 12,0 | 0,0 | 17,6 | 0,1 |
| | 507 / Ende | -8,4 | 0,0 | 0,2 | 0,0 | 0,0 | 0,0 |
| | 519 / Ende | -9,4 | 0,0 | 0,1 | 0,0 | 0,0 | 0,0 |
| CO11(41) | 116 / Anfang | -385,7 | 2,1 | -7,9 | 0,0 | -43,6 | -3,8 |
| | 116 / Ende | 281,6 | 3,8 | 389,0 | 0,1 | -209,0 | 3,1 |
| | 208 / Ende | -3,4 | -0,2 | 18,0 | 0,0 | -23,7 | -0,3 |
| | 268 / Ende | -383,8 | 0,3 | -164,1 | -0,6 | 252,6 | 0,0 |
| | 499 / Anfang | -1,2 | -0,2 | 17,7 | 0,0 | 22,4 | 0,3 |
| | 507 / Ende | 7,9 | 0,0 | 0,2 | 0,0 | 0,0 | 0,0 |
| | 519 / Ende | 9,9 | 0,0 | 0,1 | 0,0 | 0,0 | 0,0 |
| CO11(43) | 116 / Anfang | -514,7 | -1,4 | -1,5 | 0,0 | -9,9 | 0,6 |
| | 116 / Ende | 404,6 | 9,4 | 533,3 | -0,1 | -290,5 | 3,0 |
| | 208 / Ende | -7,3 | -0,2 | 25,4 | 0,0 | -31,8 | -0,3 |
| | 268 / Ende | -533,3 | 0,2 | -196,3 | -0,7 | 300,4 | -0,2 |
| | 499 / Anfang | 0,8 | -0,3 | 26,4 | 0,0 | 34,8 | 0,4 |
| | 507 / Ende | 7,7 | 0,0 | 0,2 | 0,0 | 0,0 | 0,0 |
| | 519 / Ende | 9,9 | 0,0 | 0,1 | 0,0 | 0,0 | 0,0 |
| CO11(44) | 116 / Anfang | 202,1 | -4,5 | 10,1 | 0,0 | 62,5 | 5,9 |
| | 116 / Ende | -115,7 | 2,8 | -149,1 | 0,1 | 83,6 | -1,8 |
| | 208 / Ende | -1,4 | 0,2 | -0,4 | 0,0 | 2,9 | 0,2 |
| | 268 / Ende | 147,8 | -0,1 | 93,8 | 0,5 | -146,1 | 0,1 |
| | 499 / Anfang | 1,5 | 0,2 | 0,9 | 0,0 | 1,8 | -0,1 |
| | 507 / Ende | -10,3 | 0,0 | 0,2 | 0,0 | 0,0 | 0,0 |
| | 519 / Ende | -12,4 | 0,0 | 0,2 | 0,0 | 0,0 | 0,0 |

| Name | Bauteil | N [kN] | Vy [kN] | Vz [kN] | Mx [kNm] | My [kNm] | Mz [kNm] |
|---|---|---|---|---|---|---|---|
| CO11(45) | 116 / Anfang | -412,6 | -0,4 | -7,5 | 0,0 | -42,3 | -0,6 |
| | 116 / Ende | 305,5 | 7,1 | 424,1 | 0,0 | -226,5 | 2,8 |
| | 208 / Ende | -6,4 | -0,2 | 20,2 | 0,0 | -25,5 | -0,3 |
| | 268 / Ende | -418,8 | 0,2 | -174,8 | -0,6 | 268,8 | -0,1 |
| | 499 / Anfang | 1,4 | -0,2 | 20,7 | 0,0 | 27,0 | 0,3 |
| | 507 / Ende | 7,7 | 0,0 | 0,2 | 0,0 | 0,0 | 0,0 |
| | 519 / Ende | 10,1 | 0,0 | 0,1 | 0,0 | 0,0 | 0,0 |
| CO11(25) | 116 / Anfang | 203,4 | -5,7 | 10,4 | 0,0 | 64,3 | 7,6 |
| | 116 / Ende | -115,8 | 4,3 | -149,8 | 0,1 | 84,0 | -2,0 |
| | 208 / Ende | -3,1 | 0,2 | -0,6 | 0,0 | 3,6 | 0,2 |
| | 268 / Ende | 147,8 | -0,1 | 95,2 | 0,5 | -148,3 | 0,1 |
| | 499 / Anfang | 3,3 | 0,2 | 1,1 | 0,0 | 2,5 | -0,1 |
| | 507 / Ende | -10,3 | 0,0 | 0,2 | 0,0 | 0,0 | 0,0 |
| | 519 / Ende | -12,0 | 0,0 | 0,2 | 0,0 | 0,0 | 0,0 |
| CO11(26) | 116 / Anfang | 68,4 | 0,7 | 19,1 | 0,0 | 88,3 | -1,9 |
| | 116 / Ende | -0,3 | 3,4 | 24,5 | 0,0 | -8,5 | 2,0 |
| | 208 / Ende | -1,2 | 0,1 | 7,9 | 0,0 | -9,4 | 0,0 |
| | 268 / Ende | -52,9 | 0,5 | 49,2 | -0,2 | -79,8 | 0,0 |
| | 499 / Anfang | -2,9 | 0,2 | 7,9 | 0,0 | 9,3 | -0,1 |
| | 507 / Ende | 5,1 | 0,0 | 0,2 | 0,0 | 0,0 | 0,0 |
| | 519 / Ende | 5,6 | 0,0 | 0,2 | 0,0 | 0,0 | 0,0 |
| CO11(28) | 116 / Anfang | 211,3 | 2,2 | 17,3 | 0,0 | 78,3 | -3,8 |
| | 116 / Ende | -117,4 | -0,3 | -137,5 | 0,0 | 76,4 | 1,6 |
| | 208 / Ende | 0,6 | 0,2 | 0,6 | 0,0 | -0,7 | 0,1 |
| | 268 / Ende | 107,6 | 0,5 | 100,1 | -0,1 | -154,7 | 0,0 |
| | 499 / Anfang | -2,9 | 0,2 | 0,0 | 0,0 | -1,6 | -0,1 |
| | 507 / Ende | 5,5 | 0,0 | 0,2 | 0,0 | 0,0 | 0,0 |
| | 519 / Ende | 5,7 | 0,0 | 0,1 | 0,0 | 0,0 | 0,0 |
| CO11(33) | 116 / Anfang | 186,1 | 1,1 | 18,0 | 0,0 | 82,1 | -2,4 |
| | 116 / Ende | -94,3 | 1,6 | -102,3 | 0,0 | 58,7 | 1,6 |
| | 208 / Ende | -0,7 | 0,2 | 3,0 | 0,0 | -3,2 | 0,1 |
| | 268 / Ende | 72,3 | 0,5 | 90,5 | -0,1 | -140,8 | 0,0 |
| | 499 / Anfang | -2,1 | 0,2 | 2,8 | 0,0 | 2,4 | -0,1 |
| | 507 / Ende | 5,3 | 0,0 | 0,2 | 0,0 | 0,0 | 0,0 |
| | 519 / Ende | 5,9 | 0,0 | 0,1 | 0,0 | 0,0 | 0,0 |
| CO11(34) | 116 / Anfang | -422,1 | -2,5 | 7,0 | 0,0 | 30,6 | 2,4 |
| | 116 / Ende | 353,5 | 10,2 | 458,8 | -0,1 | -251,6 | 2,5 |
| | 208 / Ende | -7,2 | -0,2 | 23,1 | 0,0 | -28,3 | -0,2 |
| | 268 / Ende | -469,2 | 0,3 | -146,0 | -0,7 | 221,0 | -0,2 |
| | 499 / Anfang | 0,8 | -0,2 | 24,4 | 0,0 | 32,5 | 0,3 |
| | 507 / Ende | 7,2 | 0,0 | 0,2 | 0,0 | 0,0 | 0,0 |
| | 519 / Ende | 9,3 | 0,0 | 0,1 | 0,0 | 0,0 | 0,0 |
| CO11(18) | 116 / Anfang | -230,2 | -7,9 | -15,3 | -0,1 | -63,6 | 10,1 |
| | 116 / Ende | 151,1 | 8,4 | 217,0 | -0,2 | -110,8 | -1,7 |
| | 208 / Ende | -8,2 | -0,1 | 9,7 | 0,0 | -9,5 | -0,1 |
| | 268 / Ende | -184,6 | -0,7 | -113,7 | 0,4 | 174,4 | -0,3 |
| | 499 / Anfang | 7,8 | -0,1 | 12,2 | 0,0 | 18,3 | 0,1 |
| | 507 / Ende | -8,5 | 0,0 | 0,2 | 0,0 | 0,0 | 0,0 |
| | 519 / Ende | -9,2 | 0,0 | 0,1 | 0,0 | 0,0 | 0,0 |
| CO11(7) | 116 / Anfang | -421,2 | -10,0 | -15,5 | 0,0 | -57,6 | 12,5 |
| | 116 / Ende | 307,0 | 12,6 | 410,4 | -0,4 | -218,0 | -1,4 |
| | 208 / Ende | -10,8 | -0,2 | 18,7 | 0,0 | -20,4 | -0,2 |
| | 268 / Ende | -374,0 | -0,9 | -180,2 | 0,5 | 275,7 | -0,5 |
| | 499 / Anfang | 8,2 | -0,2 | 22,0 | 0,0 | 31,9 | 0,3 |

| Name | Bauteil | N [kN] | Vy [kN] | Vz [kN] | Mx [kNm] | My [kNm] | Mz [kNm] |
|---|---|---|---|---|---|---|---|
| | 507 / Ende | -9,0 | 0,0 | 0,2 | 0,0 | 0,0 | 0,0 |
| | 519 / Ende | -10,0 | 0,0 | 0,2 | 0,0 | 0,0 | 0,0 |
| CO11(8) | 116 / Anfang | -221,9 | 1,0 | -7,7 | 0,0 | -48,8 | -2,2 |
| | 116 / Ende | 149,5 | 3,4 | 229,9 | 0,0 | -118,7 | 2,2 |
| | 208 / Ende | -4,2 | -0,2 | 11,0 | 0,0 | -14,3 | -0,2 |
| | 268 / Ende | -227,2 | 0,2 | -108,5 | -0,5 | 167,6 | 0,0 |
| | 499 / Anfang | 1,3 | -0,2 | 11,0 | 0,0 | 13,8 | 0,2 |
| | 507 / Ende | 7,6 | 0,0 | 0,2 | 0,0 | 0,0 | 0,0 |
| | 519 / Ende | 9,8 | 0,0 | 0,1 | 0,0 | 0,0 | 0,0 |
| CO11(9) | 116 / Anfang | -259,3 | -10,3 | 8,2 | 0,1 | 56,9 | 13,1 |
| | 116 / Ende | 243,2 | 12,7 | 298,5 | -0,3 | -165,0 | -1,7 |
| | 208 / Ende | -9,0 | 0,0 | 17,7 | 0,0 | -18,5 | 0,0 |
| | 268 / Ende | -288,3 | -0,5 | -74,4 | 0,5 | 108,2 | -0,2 |
| | 499 / Anfang | 5,4 | 0,0 | 21,1 | 0,0 | 30,5 | 0,1 |
| | 507 / Ende | -10,9 | 0,0 | 0,2 | 0,0 | 0,0 | 0,0 |
| | 519 / Ende | -13,1 | 0,0 | 0,2 | 0,0 | 0,0 | 0,0 |
| CO11(10) | 116 / Anfang | -257,1 | -9,1 | -15,2 | -0,1 | -62,3 | 11,7 |
| | 116 / Ende | 174,6 | 10,4 | 252,3 | -0,2 | -128,4 | -1,7 |
| | 208 / Ende | -9,6 | -0,1 | 12,1 | 0,0 | -12,0 | -0,1 |
| | 268 / Ende | -219,4 | -0,7 | -124,7 | 0,4 | 190,8 | -0,3 |
| | 499 / Anfang | 8,6 | -0,2 | 15,0 | 0,0 | 22,3 | 0,2 |
| | 507 / Ende | -8,7 | 0,0 | 0,2 | 0,0 | 0,0 | 0,0 |
| | 519 / Ende | -9,3 | 0,0 | 0,2 | 0,0 | 0,0 | 0,0 |

### Fehlende Lasten

| Name | X [kN] | Y [kN] | Z [kN] | Mx [kNm] | My [kNm] | Mz [kNm] |
|---|---|---|---|---|---|---|
| CO9(58) | -1,4 | -2,0 | 0,0 | 3,0 | 0,2 | -0,3 |
| CO11(59) | 0,0 | -0,5 | 1,0 | -1,1 | -0,7 | -0,2 |
| CO11(60) | 0,0 | -1,1 | 1,6 | 1,3 | -0,2 | 0,1 |
| CO11(61) | 0,0 | 0,0 | 0,1 | -0,6 | -0,3 | 0,0 |
| CO11(62) | 0,0 | 0,0 | -0,1 | 1,6 | 0,0 | 0,1 |
| CO11(63) | 0,0 | -0,1 | 0,2 | -0,6 | -0,2 | 0,0 |
| CO11(64) | 0,0 | -0,8 | 1,1 | 1,4 | -0,2 | 0,1 |
| CO11(65) | 0,0 | 0,0 | 0,0 | -0,6 | -0,4 | 0,0 |
| CO11(66) | 0,0 | 0,0 | 0,0 | 1,5 | 0,1 | 0,1 |
| CO11(67) | 0,0 | -1,1 | 1,6 | 1,3 | -0,2 | 0,1 |
| CO11(68) | 0,0 | -0,9 | 1,4 | 1,3 | -0,2 | 0,1 |
| CO11(47) | 0,0 | -1,0 | 1,5 | -1,2 | -0,8 | -0,1 |
| CO11(49) | 0,0 | -1,1 | 1,8 | -1,2 | -0,8 | -0,1 |
| CO11(50) | 0,0 | 0,0 | -0,1 | 1,6 | 0,0 | 0,1 |
| CO11(53) | 0,0 | -0,4 | 0,6 | -1,0 | -0,6 | -0,1 |
| CO11(54) | 0,0 | -0,2 | 0,4 | -1,1 | -0,5 | -0,1 |
| CO11(57) | 0,0 | 0,0 | 0,0 | 1,5 | 0,1 | 0,1 |
| CO11(36) | 0,0 | 0,0 | 0,0 | -0,6 | -0,4 | 0,0 |
| CO11(37) | 0,0 | 0,0 | 0,1 | -0,6 | -0,5 | 0,0 |
| CO11(38) | 0,0 | -0,1 | 0,2 | 1,1 | 0,0 | 0,1 |
| CO11(41) | 0,0 | -0,6 | 1,0 | -1,2 | -0,6 | -0,1 |
| CO11(43) | 0,0 | -1,1 | 1,8 | -1,1 | -0,8 | -0,1 |
| CO11(44) | 0,0 | -0,1 | 0,0 | 1,5 | 0,2 | 0,1 |
| CO11(45) | 0,0 | -0,7 | 1,2 | -1,2 | -0,7 | -0,1 |
| CO11(25) | 0,0 | -0,1 | 0,0 | 1,5 | 0,2 | 0,1 |
| CO11(26) | 0,0 | 0,0 | 0,1 | -0,6 | -0,5 | 0,0 |
| CO11(28) | 0,0 | -0,1 | 0,2 | -0,7 | -0,3 | 0,0 |
| CO11(33) | 0,0 | 0,0 | 0,1 | -0,7 | -0,3 | 0,0 |
| CO11(34) | 0,0 | -0,9 | 1,3 | -1,1 | -0,8 | -0,1 |
| CO11(18) | 0,0 | -0,1 | 0,2 | 1,1 | 0,0 | 0,0 |
| CO11(7) | 0,0 | -0,6 | 1,0 | 1,2 | -0,1 | 0,1 |
| CO11(8) | 0,0 | -0,2 | 0,4 | -1,1 | -0,5 | -0,1 |
| CO11(9) | 0,0 | -0,4 | 0,4 | 1,6 | -0,1 | 0,1 |
| CO11(10) | 0,0 | -0,2 | 0,3 | 1,2 | 0,0 | 0,0 |

## Nachweis

### Übersicht

| Name | Wert | Nachweisstatus |
|---|---|---|
| Berechnung | 100,0% | OK |
| Platten | 1,3 < 5,0% | OK |
| Lokale Verformung | 0,2 < 3% | OK |
| Schrauben | 82,7 < 100% | OK |
| Schweißnähte | 99,2 < 100% | OK |
| Beulen | Nicht berechnet | |

## Platten

| Name | Material | $t_p$ [mm] | Lasten | $\sigma_{Ed}$ [MPa] | $\varepsilon_{Pl}$ [%] | $\sigma_{c,Ed}$ [MPa] | Status |
|---|---|---|---|---|---|---|---|
| 116-bfl 1 | Baustahl S 355 | 17,5 | CO11(49) | 355,3 | 0,1 | 0,0 | OK |
| 116-tfl 1 | Baustahl S 355 | 17,5 | CO11(49) | 355,6 | 0,3 | 175,0 | OK |
| 116-w 1 | Baustahl S 355 | 10,0 | CO11(49) | 357,7 | 1,3 | 0,0 | OK |
| 208-bfl 1 | S 355 | 8,5 | CO11(49) | 355,6 | 0,3 | 0,0 | OK |
| 208-tfl 1 | S 355 | 8,5 | CO11(49) | 354,9 | 0,2 | 0,0 | OK |
| 208-w 1 | S 355 | 5,6 | CO11(49) | 180,3 | 0,0 | 0,0 | OK |
| 268-bfl 1 | Baustahl S 355 | 13,5 | CO11(49) | 355,9 | 0,4 | 0,0 | OK |
| 268-tfl 1 | Baustahl S 355 | 13,5 | CO11(67) | 164,9 | 0,0 | 0,0 | OK |
| 268-w 1 | Baustahl S 355 | 8,6 | CO11(49) | 355,2 | 0,1 | 0,0 | OK |
| 499-bfl 1 | S 355 | 8,5 | CO11(60) | 356,0 | 0,5 | 0,0 | OK |
| 499-tfl 1 | S 355 | 8,5 | CO11(60) | 355,9 | 0,4 | 0,0 | OK |
| 499-w 1 | S 355 | 5,6 | CO11(60) | 239,4 | 0,0 | 0,0 | OK |
| 507 | Baustahl S 355 | 2,9 | CO11(49) | 250,0 | 0,0 | 0,0 | OK |
| 519 | Baustahl S 355 | 2,9 | CO11(60) | 278,0 | 0,0 | 0,0 | OK |
| Stirnblech1 | S 355 | 25,0 | CO11(25) | 340,2 | 0,0 | 56,6 | OK |
| Verstärkung1 | S 355 | 15,0 | CO11(28) | 282,0 | 0,0 | 0,0 | OK |
| Verschobene Stirnplatte1a | S 355 | 20,0 | CO11(49) | 355,2 | 0,1 | 75,0 | OK |
| Verschobene Stirnplatte1b | S 355 | 20,0 | CO11(49) | 355,2 | 0,1 | 74,3 | OK |
| Verbindungsblech1a | S 355 | 10,0 | CO11(49) | 297,2 | 0,0 | 17,1 | OK |
| Verbindungsblech1b | S 355 | 10,0 | CO11(49) | 156,2 | 0,0 | 17,5 | OK |
| Rippe1a | S 355 | 15,0 | CO11(67) | 219,4 | 0,0 | 0,0 | OK |
| Rippe1b | S 355 | 15,0 | CO11(49) | 203,0 | 0,0 | 0,0 | OK |
| Rippe1c | S 355 | 15,0 | CO11(34) | 295,7 | 0,0 | 0,0 | OK |
| Rippe1d | S 355 | 15,0 | CO11(49) | 329,9 | 0,0 | 0,0 | OK |
| Verschobene Stirnplatte2a | S 355 | 20,0 | CO11(60) | 355,4 | 0,2 | 104,6 | OK |
| Verschobene Stirnplatte2b | S 355 | 20,0 | CO11(60) | 355,5 | 0,2 | 104,6 | OK |
| Verbindungsblech2a | S 355 | 10,0 | CO11(60) | 326,4 | 0,0 | 26,6 | OK |
| Verbindungsblech2b | S 355 | 10,0 | CO11(60) | 188,8 | 0,0 | 28,2 | OK |

**Bemessungsdaten**

| Material | $f_y$ [MPa] | $\varepsilon_{lim}$ [%] |
|---|---|---|
| Baustahl S 355 | 355,0 | 5,0 |
| S 355 | 355,0 | 5,0 |

**Erläuterung von Symbolen**

| | |
|---|---|
| $t_p$ | Plattendicke |
| $\sigma_{Ed}$ | Vergleichsspannung |
| $\varepsilon_{Pl}$ | Plastische Dehnung |
| $\sigma_{c,Ed}$ | Kontaktspannung |
| $f_y$ | Streckgrenze |
| $\varepsilon_{lim}$ | Grenzwert plastische Dehnung |

## Lokale Verformung

| Name | $d_0$ [mm] | Lasten | $\delta$ [mm] | $\delta_{lim}$ [mm] | $\delta/d_0$ [%] | Nachweisstatus |
|---|---|---|---|---|---|---|
| 507 | 102 | CO11(49) | 0 | 3 | 0,2 | OK |
| 519 | 76 | CO11(60) | 0 | 2 | 0,2 | OK |

**Erläuterung von Symbolen**

| | |
|---|---|
| $d_0$ | Querschnittsgröße |
| $\delta$ | Lokale Verformung im Querschnitt |
| $\delta_{lim}$ | Zulässige Verformung |

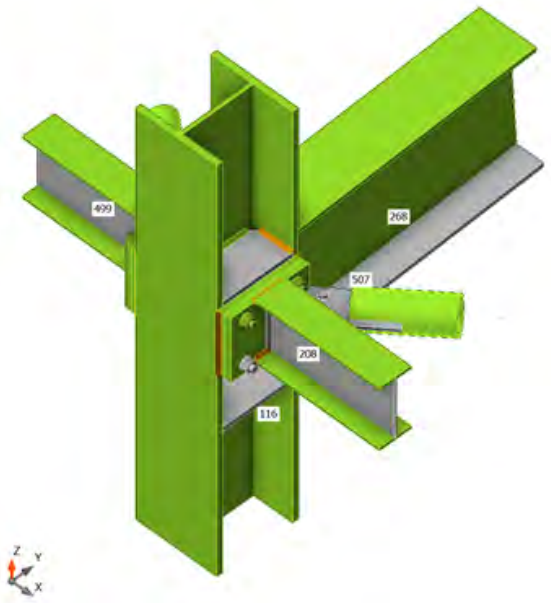


*Gesamt, CO11(49)*

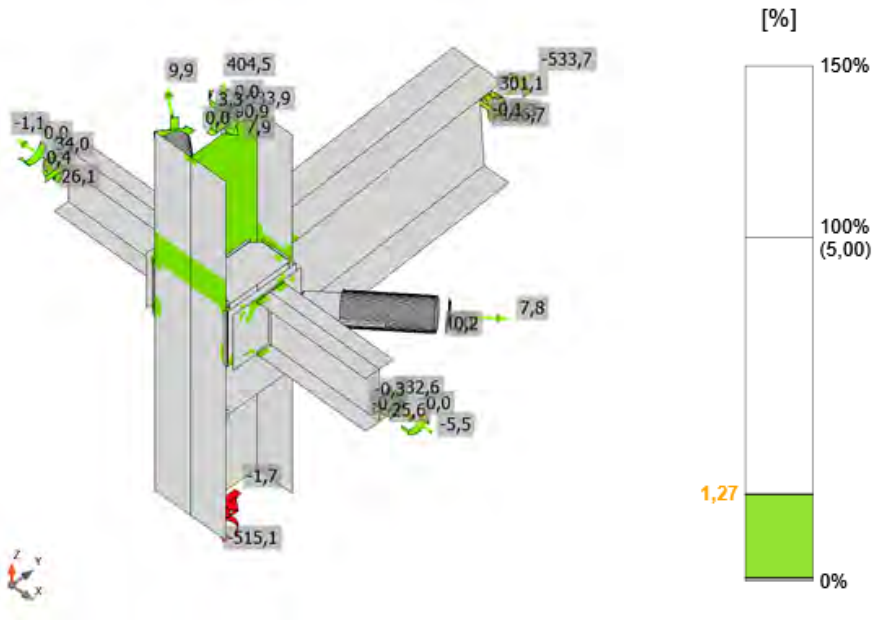


*Dehnung, CO11(49)*

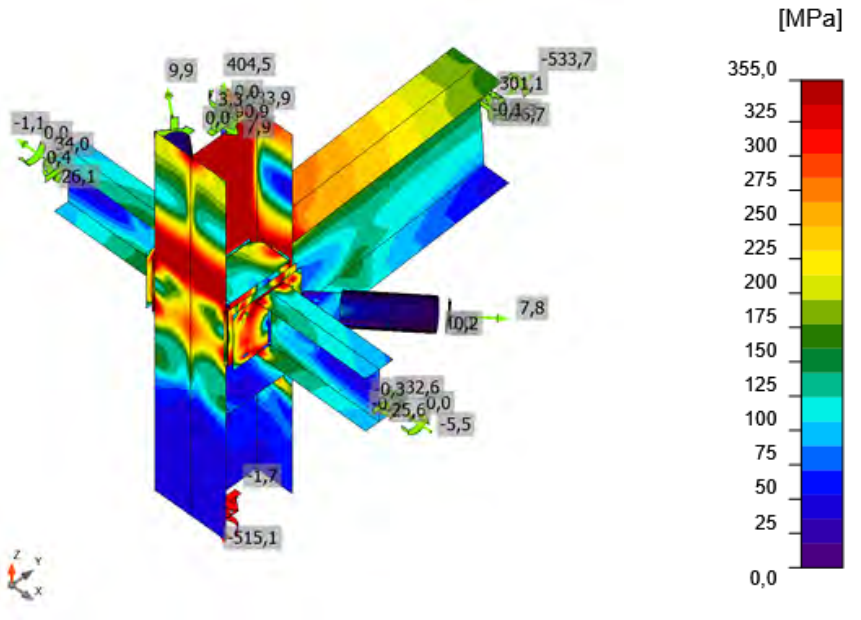


*Vergleichsspannung, CO11(49)*

## Schrauben

| Form | Position | Klasse | Lasten | $F_{t,Ed}$ [kN] | $F_{v,Ed}$ [kN] | $F_{b,Rd}$ [kN] | $Ut_t$ [%] | $Ut_s$ [%] | $Ut_{ts}$ [%] | Konstruktionsregeln | Status |
|---|---|---|---|---|---|---|---|---|---|---|---|
| 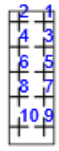 | B1 | M24 8.8 - 1 | CO11(25) | 168,1 | 5,1 | 324,2 | 82,7 | 3,8 | 62,8 | OK | OK |
| | B2 | M24 8.8 - 1 | CO11(28) | 166,3 | 5,8 | 324,2 | 81,8 | 4,2 | 62,7 | OK | OK |
| | B3 | M24 8.8 - 1 | CO11(25) | 61,9 | 5,7 | 411,6 | 30,4 | 4,2 | 26,0 | OK | OK |
| | B4 | M24 8.8 - 1 | CO11(25) | 61,9 | 6,9 | 411,6 | 30,4 | 5,1 | 26,8 | OK | OK |
| | B5 | M24 8.8 - 1 | CO11(67) | 12,4 | 14,4 | 411,6 | 6,1 | 10,6 | 15,0 | OK | OK |
| | B6 | M24 8.8 - 1 | CO11(60) | 17,8 | 13,1 | 411,6 | 8,7 | 9,7 | 15,9 | OK | OK |
| | B7 | M24 8.8 - 1 | CO11(49) | 88,6 | 13,5 | 411,6 | 43,6 | 10,0 | 41,1 | OK | OK |
| | B8 | M24 8.8 - 1 | CO11(67) | 93,9 | 14,9 | 411,6 | 46,2 | 11,0 | 44,0 | OK | OK |
| | B9 | M24 8.8 - 1 | CO11(67) | 149,8 | 18,4 | 411,6 | 73,7 | 13,6 | 66,2 | OK | OK |
| | B10 | M24 8.8 - 1 | CO11(67) | 156,1 | 19,8 | 411,6 | 76,8 | 14,6 | 69,5 | OK | OK |
| 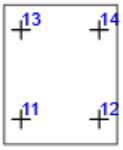 | B11 | M20 8.8 - 2 | CO11(67) | 0,0 | 16,4 | 186,4 | 0,0 | 17,4 | 17,4 | OK | OK |
| | B12 | M20 8.8 - 2 | CO11(49) | 95,1 | 16,8 | 227,9 | 67,4 | 17,8 | 66,0 | OK | OK |
| | B13 | M20 8.8 - 2 | CO9(58) | 27,2 | 7,4 | 226,5 | 19,3 | 7,8 | 21,6 | OK | OK |
| | B14 | M20 8.8 - 2 | CO11(49) | 96,0 | 12,7 | 211,0 | 68,0 | 13,5 | 62,1 | OK | OK |
| 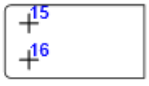 | B15 | M16 8.8 - 3 | CO9(58) | 2,3 | 15,1 | 94,6 | 2,6 | 25,1 | 26,9 | OK | OK |
| | B16 | M16 8.8 - 3 | CO9(58) | 2,0 | 11,0 | 156,8 | 2,3 | 18,2 | 19,8 | OK | OK |
| 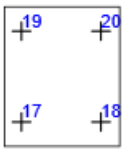 | B17 | M20 8.8 - 2 | CO11(60) | 0,0 | 24,5 | 200,2 | 0,0 | 26,0 | 26,0 | OK | OK |
| | B18 | M20 8.8 - 2 | CO11(60) | 114,1 | 16,0 | 237,6 | 80,8 | 17,1 | 74,8 | OK | OK |
| | B19 | M20 8.8 - 2 | CO11(60) | 0,0 | 19,6 | 192,7 | 0,0 | 20,9 | 20,9 | OK | OK |
| | B20 | M20 8.8 - 2 | CO11(60) | 114,5 | 17,3 | 251,3 | 81,1 | 18,3 | 76,3 | OK | OK |
| 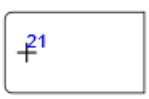 | B21 | M20 8.8 - 4 | CO9(58) | 9,2 | 20,9 | 196,0 | 6,5 | 22,2 | 26,8 | OK | OK |

**Bemessungsdaten**

| Klasse | $F_{t,Rd}$ [kN] | $B_{p,Rd}$ [kN] | $F_{v,Rd}$ [kN] |
|---|---|---|---|
| M24 8.8 - 1 | 203,3 | 491,2 | 135,6 |
| M20 8.8 - 2 | 141,1 | 469,4 | 94,1 |
| M16 8.8 - 3 | 90,4 | 187,5 | 60,3 |
| M20 8.8 - 4 | 141,1 | 234,7 | 94,1 |

**Erläuterung von Symbolen**

| | |
|---|---|
| $F_{t,Ed}$ | Zugkraft |
| $F_{v,Ed}$ | Resultierende der Schraubenscherkräfte Vy und Vz in Scherebenen |
| $F_{b,Rd}$ | Lochleibungstragfähigkeit der Platte nach EN 1993-1-8 Tab. 3.4 |
| $Ut_t$ | Ausnutzung unter Zug |
| $Ut_s$ | Ausnutzung unter Schub |
| $Ut_{ts}$ | Interaktion von Zug und Schub EN_1993-1-8 Tabelle 3.4 |
| $F_{t,Rd}$ | Zugtragfähigkeit der Schraube nach EN 1993-1-8 Tabelle 3.4 |
| $B_{p,Rd}$ | Durchstanztragfähigkeit nach EN 1993-1-8 Tabelle 3.4 |
| $F_{v,Rd}$ | Schertragfähigkeit der Schraube nach EN 1993-1-8 Tabelle 3.4 |

## Schweißnähte

| Position | Kante | $T_w$ [mm] | L [mm] | Lasten | $\sigma_{w,Ed}$ [MPa] | $\varepsilon_{Pl}$ [%] | $\sigma_{\perp}$ [MPa] | $\tau_{\perp}$ [MPa] | $\tau_{\parallel}$ [MPa] | Ut [%] | $Ut_c$ [%] | Konstruktionsregeln | Status |
|---|---|---|---|---|---|---|---|---|---|---|---|---|---|
| Stirnblech1 | 268-bfl 1 | ◢ 6,0 ◣ | 179 | CO11(49) | 428,2 | 0,8 | -124,8 | -197,7 | 129,8 | 98,3 | 90,0 | OK | OK |
| | | ◢ 6,0 ◣ | 179 | CO11(49) | 432,0 | 2,9 | -306,0 | -167,9 | -52,9 | 99,2 | 96,5 | OK | OK |
| Stirnblech1 | 268-tfl 1 | ◢ 6,0 ◣ | 180 | CO11(67) | 247,2 | 0,0 | 124,9 | 105,0 | 64,3 | 56,7 | 45,4 | OK | OK |
| | | ◢ 6,0 ◣ | 180 | CO11(67) | 239,2 | 0,0 | 97,8 | -120,9 | -35,7 | 54,9 | 39,3 | OK | OK |
| Stirnblech1 | 268-w 1 | ◢ 6,0 ◣ | 384 | CO11(67) | 427,7 | 0,5 | -216,8 | -211,2 | 26,5 | 98,2 | 64,1 | OK | OK |
| | | ◢ 6,0 ◣ | 384 | CO11(49) | 427,8 | 0,6 | -215,5 | 212,5 | -19,1 | 98,2 | 64,2 | OK | OK |
| Stirnblech1 | Verstärkung1 | ◢ 8,0 ◣ | 130 | CO11(28) | 426,9 | 0,0 | -183,1 | -182,3 | 127,8 | 98,0 | 55,5 | OK | OK |
| | | ◢ 8,0 ◣ | 130 | CO11(28) | 426,9 | 0,0 | -182,1 | 183,0 | -127,3 | 98,0 | 55,4 | OK | OK |
| 268-tfl 1 | Verstärkung1 | ◢ 8,0 ◣ | 299 | CO11(67) | 236,4 | 0,0 | 60,0 | 64,5 | 115,2 | 54,3 | 33,8 | OK | OK |
| | | ◢ 8,0 ◣ | 299 | CO11(67) | 244,7 | 0,0 | 66,8 | -62,3 | -120,8 | 56,2 | 34,9 | OK | OK |
| Verschobene Stirnplatte1a | 116-tfl 1 | ◢ 6,0 ◣ | 201 | CO11(49) | 426,9 | 0,0 | -71,6 | -202,4 | 134,5 | 98,0 | 66,8 | OK | OK |
| | | ◢ 6,0 ◣ | 200 | CO11(49) | 428,1 | 0,7 | -238,4 | -184,0 | 91,0 | 98,3 | 90,5 | OK | OK |
| Verschobene Stirnplatte1a | 116-bfl 1 | ◢ 6,0 ◣ | 200 | CO11(49) | 429,2 | 1,4 | -311,6 | 169,3 | -19,6 | 98,6 | 93,5 | OK | OK |
| | | ◢ 6,0 ◣ | 201 | CO11(49) | 395,2 | 0,0 | 176,7 | 19,6 | -203,1 | 90,7 | 62,8 | OK | OK |
| Verschobene Stirnplatte1b | 208-bfl 1 | ◢ 6,0 ◣ | 100 | CO11(49) | 426,9 | 0,1 | 40,3 | 97,6 | 225,2 | 98,0 | 66,7 | OK | OK |
| | | ◢ 6,0 ◣ | 100 | CO11(49) | 427,3 | 0,3 | 342,0 | 72,4 | -129,0 | 98,1 | 73,0 | OK | OK |
| Verschobene Stirnplatte1b | 208-tfl 1 | ◢ 6,0 ◣ | 99 | CO11(49) | 427,8 | 0,6 | -149,7 | -134,7 | 188,1 | 98,2 | 75,3 | OK | OK |
| | | ◢ 6,0 ◣ | 99 | CO11(49) | 427,6 | 0,4 | -129,4 | 147,7 | -183,1 | 98,2 | 72,2 | OK | OK |
| Verschobene Stirnplatte1b | 208-w 1 | ◢ 6,0 ◣ | 186 | CO11(49) | 119,3 | 0,0 | -49,0 | -55,0 | 30,3 | 27,4 | 18,2 | OK | OK |
| | | ◢ 6,0 ◣ | 187 | CO11(49) | 125,6 | 0,0 | -65,6 | 59,6 | -16,6 | 28,8 | 18,6 | OK | OK |
| 208-w 1 | Verbindungsblech1a | ◢ 6,0 ◣ | 149 | CO11(49) | 85,8 | 0,0 | 13,8 | 34,9 | 34,2 | 19,7 | 13,0 | OK | OK |

| Position | Kante | $T_w$ [mm] | L [mm] | Lasten | $\sigma_{w,Ed}$ [MPa] | $\varepsilon_{Pl}$ [%] | $\sigma_{\perp}$ [MPa] | $\tau_{\perp}$ [MPa] | $\tau_{\parallel}$ [MPa] | Ut [%] | $Ut_c$ [%] | Konstruktionsregeln | Status |
|---|---|---|---|---|---|---|---|---|---|---|---|---|---|
| | | ◢ 6,0 ◣ | 149 | CO11(49) | 110,5 | 0,0 | 31,5 | -10,4 | -60,3 | 25,4 | 16,8 | OK | OK |
| Verschobene Stirnplatte1b | Verbindungsblech1a | ◢ 6,0 ◣ | 119 | CO11(49) | 282,0 | 0,0 | 32,3 | 30,2 | 158,9 | 64,7 | 39,0 | OK | OK |
| | | ◢ 6,0 ◣ | 119 | CO11(49) | 262,2 | 0,0 | -14,9 | 6,8 | 151,0 | 60,2 | 40,7 | OK | OK |
| Verbindungsblech1b | 507-arc 1 | ◢ 6,0 | 119 | CO9(58) | 63,5 | 0,0 | -24,6 | 15,3 | 30,2 | 14,6 | 9,9 | OK | OK |
| Verbindungsblech1b | 507-arc 31 | ◢ 6,0 | 119 | CO11(49) | 92,9 | 0,0 | 37,3 | -17,7 | 45,9 | 21,3 | 11,6 | OK | OK |
| Verbindungsblech1b | 507-arc 33 | ◢ 6,0 | 119 | CO11(49) | 66,7 | 0,0 | -29,2 | 13,2 | 32,0 | 15,3 | 9,4 | OK | OK |
| Verbindungsblech1b | 507-arc 63 | ◢ 6,0 | 119 | CO9(58) | 49,6 | 0,0 | 9,8 | -1,0 | -28,1 | 11,4 | 9,1 | OK | OK |
| 116-bfl 1 | Rippe1a | ◢ 6,0 ◣ | 101 | CO11(67) | 106,2 | 0,0 | 60,3 | 44,3 | 24,2 | 24,4 | 18,9 | OK | OK |
| | | ◢ 6,0 ◣ | 101 | CO11(67) | 81,4 | 0,0 | -24,9 | 8,9 | -43,8 | 18,7 | 15,1 | OK | OK |
| 116-w 1 | Rippe1a | ◢ 6,0 ◣ | 177 | CO11(67) | 100,3 | 0,0 | -20,8 | 0,2 | -56,6 | 23,0 | 18,0 | OK | OK |
| | | ◢ 6,0 ◣ | 177 | CO11(67) | 86,4 | 0,0 | 39,1 | -18,1 | 40,7 | 19,8 | 15,3 | OK | OK |
| 116-tfl 1 | Rippe1a | ◢ 6,0 ◣ | 101 | CO11(60) | 109,1 | 0,0 | 7,9 | 18,2 | 60,1 | 25,1 | 18,8 | OK | OK |
| | | ◢ 6,0 ◣ | 101 | CO11(67) | 286,5 | 0,0 | 118,0 | -107,6 | -105,6 | 65,8 | 39,6 | OK | OK |
| 116-bfl 1 | Rippe1b | ◢ 6,0 ◣ | 101 | CO11(60) | 83,9 | 0,0 | -24,4 | -9,0 | 45,5 | 19,3 | 14,8 | OK | OK |
| | | ◢ 6,0 ◣ | 101 | CO11(67) | 105,1 | 0,0 | 59,2 | -43,6 | -24,8 | 24,1 | 18,3 | OK | OK |
| 116-w 1 | Rippe1b | ◢ 6,0 ◣ | 177 | CO11(67) | 85,4 | 0,0 | 39,3 | 18,4 | -39,7 | 19,6 | 14,2 | OK | OK |
| | | ◢ 6,0 ◣ | 177 | CO11(49) | 97,0 | 0,0 | -22,3 | 1,9 | 54,5 | 22,3 | 17,2 | OK | OK |
| 116-tfl 1 | Rippe1b | ◢ 6,0 ◣ | 101 | CO11(49) | 257,6 | 0,0 | 108,7 | 96,9 | 93,8 | 59,1 | 38,1 | OK | OK |
| | | ◢ 6,0 ◣ | 100 | CO11(49) | 116,2 | 0,0 | 52,7 | -59,8 | 0,6 | 26,7 | 18,0 | OK | OK |
| 116-bfl 1 | Rippe1c | ◢ 6,0 ◣ | 101 | CO11(49) | 335,7 | 0,0 | -143,3 | -130,4 | -117,2 | 77,1 | 53,4 | OK | OK |
| | | ◢ 6,0 ◣ | 101 | CO11(68) | 240,9 | 0,0 | -65,5 | 79,0 | 108,0 | 55,3 | 37,7 | OK | OK |
| 116-w 1 | Rippe1c | ◢ 6,0 ◣ | 177 | CO11(49) | 265,4 | 0,0 | -29,5 | -33,5 | 148,6 | 60,9 | 34,9 | OK | OK |
| | | ◢ 6,0 ◣ | 177 | CO11(67) | 244,7 | 0,0 | -35,0 | 34,3 | -135,6 | 56,2 | 35,8 | OK | OK |

| Position | Kante | $T_w$ [mm] | L [mm] | Lasten | $\sigma_{w,Ed}$ [MPa] | $\varepsilon_{Pl}$ [%] | $\sigma_{\perp}$ [MPa] | $\tau_{\perp}$ [MPa] | $\tau_{\parallel}$ [MPa] | Ut [%] | $Ut_c$ [%] | Konstruktionsregeln | Status |
|---|---|---|---|---|---|---|---|---|---|---|---|---|---|
| 116-tfl 1 | Rippe1c | ◢ 6,0 ◣ | 101 | CO11(67) | 427,7 | 0,5 | -172,0 | -207,3 | -90,3 | 98,2 | 69,2 | OK | OK |
| | | ◢ 6,0 ◣ | 101 | CO11(49) | 429,8 | 1,7 | -223,9 | 208,7 | 36,3 | 98,7 | 81,0 | OK | OK |
| 116-bfl 1 | Rippe1d | ◢ 6,0 ◣ | 101 | CO11(47) | 234,1 | 0,0 | -64,2 | -80,2 | -102,3 | 53,8 | 38,6 | OK | OK |
| | | ◢ 6,0 ◣ | 101 | CO11(49) | 347,3 | 0,0 | -146,2 | 132,6 | 124,5 | 79,7 | 55,5 | OK | OK |
| 116-w 1 | Rippe1d | ◢ 6,0 ◣ | 177 | CO11(49) | 246,9 | 0,0 | -40,3 | -36,1 | 135,9 | 56,7 | 36,6 | OK | OK |
| | | ◢ 6,0 ◣ | 177 | CO11(49) | 271,3 | 0,0 | -29,1 | 33,4 | -152,1 | 62,3 | 35,4 | OK | OK |
| 116-tfl 1 | Rippe1d | ◢ 6,0 ◣ | 101 | CO11(49) | 430,2 | 1,9 | -222,5 | -208,6 | -41,0 | 98,8 | 82,5 | OK | OK |
| | | ◢ 6,0 ◣ | 100 | CO11(49) | 427,8 | 0,5 | -169,8 | 210,1 | 85,1 | 98,2 | 70,4 | OK | OK |
| Verschobene Stirnplatte2a | 116-tfl 1 | ◢ 6,0 ◣ | 201 | CO11(60) | 427,7 | 0,5 | -83,1 | -233,4 | -64,7 | 98,2 | 70,3 | OK | OK |
| | | ◢ 6,0 ◣ | 202 | CO11(60) | 430,1 | 1,9 | -237,7 | -192,7 | -75,4 | 98,7 | 94,8 | OK | OK |
| Verschobene Stirnplatte2a | 116-bfl 1 | ◢ 6,0 ◣ | 201 | CO11(60) | 431,1 | 2,5 | -317,2 | 168,1 | 13,2 | 99,0 | 96,5 | OK | OK |
| | | ◢ 6,0 ◣ | 202 | CO11(43) | 426,8 | 0,0 | 226,9 | -9,3 | 208,5 | 98,0 | 68,4 | OK | OK |
| Verschobene Stirnplatte2b | 499-bfl 1 | ◢ 6,0 ◣ | 100 | CO11(60) | 427,6 | 0,5 | 88,6 | 87,4 | -225,2 | 98,2 | 75,7 | OK | OK |
| | | ◢ 6,0 ◣ | 100 | CO11(60) | 428,2 | 0,8 | 304,8 | 97,2 | 143,8 | 98,3 | 80,8 | OK | OK |
| Verschobene Stirnplatte2b | 499-tfl 1 | ◢ 6,0 ◣ | 99 | CO11(60) | 428,7 | 1,0 | -152,7 | -135,7 | -187,3 | 98,4 | 82,1 | OK | OK |
| | | ◢ 6,0 ◣ | 99 | CO11(60) | 428,3 | 0,8 | -130,3 | 151,2 | 180,6 | 98,3 | 78,7 | OK | OK |
| Verschobene Stirnplatte2b | 499-w 1 | ◢ 6,0 ◣ | 188 | CO11(60) | 165,1 | 0,0 | -66,8 | -77,6 | -39,7 | 37,9 | 27,3 | OK | OK |
| | | ◢ 6,0 ◣ | 188 | CO11(60) | 181,2 | 0,0 | -96,7 | 86,1 | 20,5 | 41,6 | 29,6 | OK | OK |
| 499-w 1 | Verbindungsblech2a | ◢ 4,0 ◣ | 149 | CO11(49) | 201,8 | 0,0 | 57,0 | 34,2 | 106,4 | 46,3 | 30,6 | OK | OK |
| | | ◢ 4,0 ◣ | 149 | CO11(49) | 141,4 | 0,0 | 31,3 | -54,1 | -58,4 | 32,5 | 20,9 | OK | OK |
| Verschobene Stirnplatte2b | Verbindungsblech2a | ◢ 4,0 ◣ | 119 | CO11(60) | 425,8 | 0,0 | -103,8 | -51,0 | -232,9 | 97,8 | 64,4 | OK | OK |
| | | ◢ 4,0 ◣ | 119 | CO11(60) | 427,0 | 0,1 | 50,8 | -52,0 | -239,2 | 98,0 | 64,7 | OK | OK |

| Position | Kante | $T_w$ [mm] | L [mm] | Lasten | $\sigma_{w,Ed}$ [MPa] | $\varepsilon_{Pl}$ [%] | $\sigma_{\perp}$ [MPa] | $\tau_{\perp}$ [MPa] | $\tau_{\parallel}$ [MPa] | Ut [%] | $Ut_c$ [%] | Konstruktionsregeln | Status |
|---|---|---|---|---|---|---|---|---|---|---|---|---|---|
| Verbindungsblech2b | 519-arc 22 | ◢ 4,0 | 109 | CO9(58) | 99,7 | 0,0 | -47,2 | 20,4 | -46,4 | 22,9 | 15,1 | OK | OK |
| Verbindungsblech2b | 519-arc 44 | ◢ 4,0 | 109 | CO11(60) | 123,0 | 0,0 | -65,2 | 20,8 | -56,5 | 28,2 | 16,5 | OK | OK |
| Verbindungsblech2b | 519 | ◢ 4,0 | 219 | CO11(43) | 165,2 | 0,0 | 66,8 | -28,9 | -82,3 | 37,9 | 24,8 | OK | OK |

**Bemessungsdaten**

| Material | $f_u$ [MPa] | $\beta_w$ [-] | $\sigma_{w,Rd}$ [MPa] | 0.9 σ [MPa] |
|---|---|---|---|---|
| S 355 | 490,0 | 0,90 | 435,6 | 352,8 |

**Erläuterung von Symbolen**

| | |
|---|---|
| $T_w$ | Nahtdicke a |
| L | Länge |
| $\sigma_{w,Ed}$ | Vergleichsspannung |
| $\varepsilon_{Pl}$ | Dehnung |
| $\sigma_{\perp}$ | Senkrechte Spannung |
| $\tau_{\perp}$ | Scherspannung senkrecht zur Schweißnahtachse |
| $\tau_{\parallel}$ | Scherspannung parallel zur Schweißnahtachse |
| Ut | Ausnutzung |
| $Ut_c$ | Schätzung der Schweißnahtkapazität |
| ◢ | Kehlnaht |
| $f_u$ | Grenzfestigkeit der Schweißnaht |
| $\beta_w$ | Korrelationsfaktor nach EN 1993-1-8 Tab. 4.1 |
| $\sigma_{w,Rd}$ | Tragfähigkeit der Schweißnaht |
| 0.9 σ | Senkrechter Spannungswiderstand - 0.9*fu / γM2 |

### Beulen

**Die Beulanalyse wurde nicht berechnet.**

## Normeinstellungen

| Position | Wert | Einheit | Bezug |
|---|---|---|---|
| Sicherheitsfaktor $\gamma_{M0}$ | 1,00 | - | EN 1993-1-1 – 6.1 |
| Sicherheitsfaktor $\gamma_{M1}$ | 1,00 | - | EN 1993-1-1 – 6.1 |
| Sicherheitsfaktor $\gamma_{M2}$ | 1,25 | - | EN 1993-1-1 – 6.1 |
| Sicherheitsfaktor $\gamma_{M3}$ | 1,25 | - | EN 1993-1-8 – Table 2.1 |
| Sicherheitsfaktor $\gamma_C$ | 1,50 | - | EN 1992-1-1 – 2.4.2.4 |
| Sicherheitsfaktor $\gamma_{Inst}$ | 1,20 | - | EN 1992-4 – Table 4.1 |
| Verbindungskoeffizient βj | 0,67 | - | EN 1993-1-8 – 6.2.5(7) |
| Wirksame Fläche - Einfluss der Netzgröße | 0,10 | - | |
| Reibungsbeiwert - Beton | 0,25 | - | EN 1993-1-8 |
| Reibungskoeffizient bei gleitfesten Verbindungen | 0,30 | - | EN 1993-1-8 – Table 3.7 |
| Plastische Dehnung - Grenzwert | 0,05 | - | EN 1993-1-5 |
| Konstruktionsregeln | Ja | | |
| Distance between bolts [d0] | 2,20 | - | EN 1993-1-8 – Table 3.3 |
| Distance between bolts and edge [d0] | 1,20 | - | EN 1993-1-8 – Table 3.3 |
| Nachweis der Tragfähigkeit bei Betonausbruch | Beide | | |
| Berechnetes αb für Lochleibungsnachweis anwenden. | Ja | | EN 1993-1-8 – Table 3.4 |
| Gerissener Beton | Ja | | EN 1992-4 |
| Überprüfen der lokalen Verformung | Ja | | |
| Lokale Verformung - Grenzwert | 0,03 | - | CIDECT DG 1, 3 – 1.1 |
| Geometrische Nichtlinearität (GMNA) | Ja | | Analyse mit großen Verformungen für Verbindungen mit Hohlprofilen |
| Ausgesteiftes System | Nein | | EN 1993-1-8 – 5.2.2.5 |

| | |
|---|---|
| **Projekt:** | **IdeaStatiCa-Stadion_Fazanerija_JK-6_BR - 102** |
| **Projektnummer:** | **Detail D6-O3** |
| **Autor:** | **mag. Igor Gorup dipl. ing.** |

## Projektdaten

| | |
|---|---|
| Projektname | IdeaStatiCa-Stadion_Fazanerija_JK-6_BR - 102 |
| Projektnummer | Detail D6-O3 |
| Autor | mag. Igor Gorup dipl. ing. |
| Beschreibung | |
| Datum | 18.06.2025 |
| Norm | EN |

## Material

| | |
|---|---|
| Stahl | Baustahl S 355, S 355 |

# Projektposition 102

## Bemessung

| | |
|---|---|
| Name | 102 |
| Beschreibung | |
| Berechnung | Spannung, Dehnung/ Lasten im Gleichgewicht |

### Bauteile

#### Geometrie

| Name | Querschnitt | β – Rotation [°] | Y - Rotation [°] | α - Rotation [°] | Abstand ex [mm] | Abstand ey [mm] | Abstand ez [mm] |
|---|---|---|---|---|---|---|---|
| 266 | 358 - IPE400 | 90,0 | 3,5 | 180,0 | 0 | 0 | 0 |
| 283 | 476 - RO101.6X4 | 0,0 | 0,0 | -180,0 | 0 | 0 | -100 |
| 286 | 476 - RO101.6X4 | 0,0 | 0,0 | -180,0 | 0 | 0 | -100 |
| 512 | 470 - RO101.6X2.9 | 50,1 | 2,7 | -180,0 | 0 | 0 | -100 |

#### Auflager und Kräfte

| Name | Auflager | Kräfte in | X [mm] |
|---|---|---|---|
| 266 / anfang | N-Vy-Vz-Mx-My-Mz | Position | 0 |
| 266 / ende | | Position | 0 |
| 283 / ende | Mx-My-Mz | Schrauben | 0 |
| 286 / ende | Mx-My-Mz | Schrauben | 0 |
| 512 / ende | Mx-My-Mz | Schrauben | 0 |

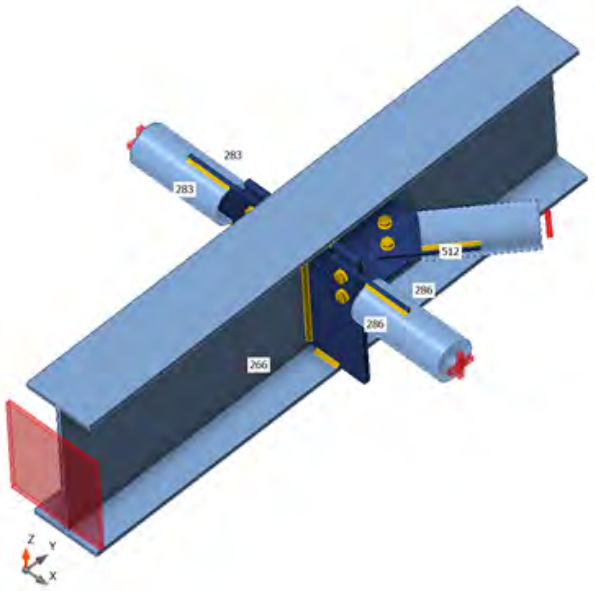


### Querschnitte

| Name | Material |
|---|---|
| 358 - IPE400 | Baustahl S 355 |
| 476 - RO101.6X4 | Baustahl S 355 |
| 470 - RO101.6X2.9 | Baustahl S 355 |

### Schrauben

| Name | Durchmesser [mm] | $f_y$ [MPa] | $f_u$ [MPa] | Bruttofläche [$mm^2$] |
|---|---|---|---|---|
| M16 8.8 | 16 | 640,0 | 800,0 | 201 |

## Lasteinwirkungen (Kräfte im Gleichgewicht)

| Name | Bauteil | N [kN] | Vy [kN] | Vz [kN] | Mx [kNm] | My [kNm] | Mz [kNm] |
|---|---|---|---|---|---|---|---|
| CO11(32) | 266 / Anfang | -83,0 | 0,1 | -1,4 | 0,0 | 0,0 | -0,7 |
| | 266 / Ende | 96,2 | 0,2 | -0,1 | 0,0 | 0,0 | 0,7 |
| | 283 / Anfang | -2,3 | 0,0 | 0,5 | 0,0 | 0,0 | 0,0 |
| | 286 / Ende | 13,0 | 0,0 | 0,7 | 0,0 | 0,0 | 0,0 |
| | 512 / Ende | -17,1 | 0,0 | 0,3 | 0,0 | 0,0 | 0,0 |
| CO9(33) | 266 / Anfang | -41,6 | -2,1 | 0,8 | 0,1 | -3,6 | 3,8 |
| | 266 / Ende | 0,5 | -3,9 | -0,9 | 0,0 | 3,6 | -3,8 |
| | 283 / Anfang | -2,8 | 0,0 | 0,0 | 0,0 | 0,0 | 0,0 |
| | 286 / Ende | -26,1 | 0,0 | 0,0 | 0,0 | 0,0 | 0,0 |
| | 512 / Ende | 50,2 | 0,0 | 0,0 | 0,0 | 0,0 | 0,0 |
| CO11(34) | 266 / Anfang | -105,7 | 0,2 | -1,1 | 0,0 | -1,1 | 0,4 |
| | 266 / Ende | 95,9 | -0,1 | -0,4 | 0,0 | 1,1 | -0,4 |
| | 283 / Anfang | 1,6 | 0,0 | 0,5 | 0,0 | 0,0 | 0,0 |
| | 286 / Ende | -10,0 | 0,0 | 0,8 | 0,0 | 0,0 | 0,0 |
| | 512 / Ende | 12,9 | 0,0 | 0,2 | 0,0 | 0,0 | 0,0 |
| CO11(35) | 266 / Anfang | 552,4 | -0,1 | -3,4 | 0,0 | 8,3 | -0,6 |
| | 266 / Ende | -540,6 | 0,1 | 1,9 | 0,0 | -8,3 | 0,6 |
| | 283 / Anfang | -2,6 | 0,0 | 0,4 | 0,0 | 0,0 | 0,0 |
| | 286 / Ende | 12,3 | -0,1 | 0,7 | 0,0 | 0,0 | 0,0 |
| | 512 / Ende | -15,3 | 0,0 | 0,3 | 0,0 | 0,0 | 0,0 |
| CO11(36) | 266 / Anfang | 526,9 | -0,1 | -3,1 | 0,1 | 7,0 | 0,7 |
| | 266 / Ende | -541,0 | -0,2 | 1,6 | 0,0 | -7,0 | -0,7 |
| | 283 / Anfang | 2,3 | 0,0 | 0,5 | 0,0 | 0,0 | 0,0 |
| | 286 / Ende | -13,8 | -0,1 | 0,8 | 0,0 | 0,0 | 0,0 |
| | 512 / Ende | 18,4 | 0,0 | 0,2 | 0,0 | 0,0 | 0,0 |
| CO11(37) | 266 / Anfang | -120,7 | 0,1 | -0,9 | 0,0 | -0,3 | -0,7 |
| | 266 / Ende | 133,6 | 0,2 | -0,3 | 0,0 | 0,3 | 0,7 |
| | 283 / Anfang | -2,3 | 0,0 | 0,3 | 0,0 | 0,0 | 0,0 |
| | 286 / Ende | 12,8 | 0,0 | 0,5 | 0,0 | 0,0 | 0,0 |
| | 512 / Ende | -16,8 | 0,0 | 0,2 | 0,0 | 0,0 | 0,0 |
| CO11(38) | 266 / Anfang | 318,6 | 0,0 | -2,8 | 0,1 | 5,2 | 0,5 |
| | 266 / Ende | -331,1 | -0,1 | 1,3 | 0,0 | -5,2 | -0,5 |
| | 283 / Anfang | 1,8 | 0,0 | 0,5 | 0,0 | 0,0 | 0,0 |
| | 286 / Ende | -12,2 | -0,1 | 0,8 | 0,0 | 0,0 | 0,0 |
| | 512 / Ende | 16,2 | 0,0 | 0,2 | 0,0 | 0,0 | 0,0 |
| CO11(39) | 266 / Anfang | 552,4 | -0,1 | -3,4 | 0,0 | 8,3 | -0,6 |
| | 266 / Ende | -540,6 | 0,1 | 1,9 | 0,0 | -8,3 | 0,6 |
| | 283 / Anfang | -2,5 | 0,0 | 0,4 | 0,0 | 0,0 | 0,0 |
| | 286 / Ende | 12,2 | -0,1 | 0,7 | 0,0 | 0,0 | 0,0 |
| | 512 / Ende | -15,2 | 0,0 | 0,3 | 0,0 | 0,0 | 0,0 |
| CO11(40) | 266 / Anfang | -83,1 | 0,1 | -1,3 | 0,0 | -0,1 | -0,7 |
| | 266 / Ende | 96,2 | 0,2 | -0,2 | 0,0 | 0,0 | 0,7 |
| | 283 / Anfang | -2,3 | 0,0 | 0,5 | 0,0 | 0,0 | 0,0 |
| | 286 / Ende | 12,9 | 0,0 | 0,7 | 0,0 | 0,0 | 0,0 |
| | 512 / Ende | -16,9 | 0,0 | 0,3 | 0,0 | 0,0 | 0,0 |
| CO11(41) | 266 / Anfang | 44,5 | 0,1 | -1,7 | 0,0 | 2,3 | -0,7 |
| | 266 / Ende | -31,8 | 0,2 | 0,6 | 0,0 | -2,3 | 0,7 |
| | 283 / Anfang | -2,5 | 0,0 | 0,3 | 0,0 | 0,0 | 0,0 |
| | 286 / Ende | 12,9 | 0,0 | 0,5 | 0,0 | 0,0 | 0,0 |
| | 512 / Ende | -16,6 | 0,0 | 0,2 | 0,0 | 0,0 | 0,0 |
| CO11(23) | 266 / Anfang | 49,3 | 0,1 | -2,0 | 0,0 | 1,9 | -0,7 |
| | 266 / Ende | -36,2 | 0,2 | 0,5 | 0,0 | -1,9 | 0,7 |

| Name | Bauteil | N [kN] | Vy [kN] | Vz [kN] | Mx [kNm] | My [kNm] | Mz [kNm] |
|---|---|---|---|---|---|---|---|
| | 283 / Anfang | -2,4 | 0,0 | 0,4 | 0,0 | 0,0 | 0,0 |
| | 286 / Ende | 13,0 | 0,0 | 0,7 | 0,0 | 0,0 | 0,0 |
| | 512 / Ende | -16,9 | 0,0 | 0,3 | 0,0 | 0,0 | 0,0 |
| CO11(25) | 266 / Anfang | 240,7 | -0,1 | -1,7 | 0,1 | 0,4 | 0,7 |
| | 266 / Ende | -254,1 | -0,2 | 0,2 | 0,0 | -0,4 | -0,7 |
| | 283 / Anfang | 3,0 | 0,0 | 0,5 | 0,0 | 0,0 | 0,0 |
| | 286 / Ende | -13,9 | -0,1 | 0,8 | 0,0 | 0,0 | 0,0 |
| | 512 / Ende | 17,4 | 0,0 | 0,2 | 0,0 | 0,0 | 0,0 |
| CO11(26) | 266 / Anfang | -143,2 | 0,2 | -0,6 | 0,0 | -1,3 | 0,4 |
| | 266 / Ende | 133,2 | -0,1 | -0,5 | 0,0 | 1,3 | -0,4 |
| | 283 / Anfang | 1,6 | 0,0 | 0,4 | 0,0 | 0,0 | 0,0 |
| | 286 / Ende | -10,1 | 0,0 | 0,6 | 0,0 | 0,0 | 0,0 |
| | 512 / Ende | 13,1 | 0,0 | 0,2 | 0,0 | 0,0 | 0,0 |
| CO11(29) | 266 / Anfang | 281,4 | 0,1 | -2,4 | 0,1 | 4,9 | 0,5 |
| | 266 / Ende | -293,7 | -0,1 | 1,3 | 0,0 | -4,9 | -0,5 |
| | 283 / Anfang | 1,8 | 0,0 | 0,4 | 0,0 | 0,0 | 0,0 |
| | 286 / Ende | -12,0 | 0,0 | 0,6 | 0,0 | 0,0 | 0,0 |
| | 512 / Ende | 16,1 | 0,0 | 0,2 | 0,0 | 0,0 | 0,0 |
| CO11(12) | 266 / Anfang | 203,4 | -0,1 | -1,3 | 0,1 | 0,1 | 0,7 |
| | 266 / Ende | -216,7 | -0,2 | 0,2 | 0,0 | -0,1 | -0,7 |
| | 283 / Anfang | 3,0 | 0,0 | 0,4 | 0,0 | 0,0 | 0,0 |
| | 286 / Ende | -13,9 | 0,0 | 0,6 | 0,0 | 0,0 | 0,0 |
| | 512 / Ende | 17,3 | 0,0 | 0,2 | 0,0 | 0,0 | 0,0 |
| CO11(13) | 266 / Anfang | 486,8 | 0,0 | -3,4 | 0,0 | 8,0 | -0,7 |
| | 266 / Ende | -474,8 | 0,1 | 1,9 | 0,0 | -8,0 | 0,7 |
| | 283 / Anfang | -2,8 | 0,0 | 0,4 | 0,0 | 0,0 | 0,0 |
| | 286 / Ende | 12,7 | -0,1 | 0,7 | 0,0 | 0,0 | 0,0 |
| | 512 / Ende | -15,6 | 0,0 | 0,3 | 0,0 | 0,0 | 0,0 |
| CO11(15) | 266 / Anfang | 527,0 | -0,1 | -3,1 | 0,1 | 7,0 | 0,7 |
| | 266 / Ende | -541,0 | -0,2 | 1,6 | 0,0 | -7,0 | -0,7 |
| | 283 / Anfang | 2,3 | 0,0 | 0,5 | 0,0 | 0,0 | 0,0 |
| | 286 / Ende | -13,8 | -0,1 | 0,8 | 0,0 | 0,0 | 0,0 |
| | 512 / Ende | 18,3 | 0,0 | 0,2 | 0,0 | 0,0 | 0,0 |
| CO11(16) | 266 / Anfang | 240,7 | -0,1 | -1,7 | 0,1 | 0,4 | 0,7 |
| | 266 / Ende | -254,1 | -0,2 | 0,2 | 0,0 | -0,4 | -0,7 |
| | 283 / Anfang | 3,0 | 0,0 | 0,5 | 0,0 | 0,0 | 0,0 |
| | 286 / Ende | -13,9 | -0,1 | 0,8 | 0,0 | 0,0 | 0,0 |
| | 512 / Ende | 17,4 | 0,0 | 0,2 | 0,0 | 0,0 | 0,0 |
| CO11(17) | 266 / Anfang | 397,2 | -0,1 | -2,5 | 0,0 | 4,0 | -0,5 |
| | 266 / Ende | -386,2 | 0,1 | 1,0 | 0,0 | -4,0 | 0,5 |
| | 283 / Anfang | -1,7 | 0,0 | 0,5 | 0,0 | 0,0 | 0,0 |
| | 286 / Ende | 10,9 | 0,0 | 0,7 | 0,0 | 0,0 | 0,0 |
| | 512 / Ende | -14,4 | 0,0 | 0,3 | 0,0 | 0,0 | 0,0 |
| CO11(19) | 266 / Anfang | 277,3 | 0,0 | -2,7 | 0,0 | 4,8 | -0,7 |
| | 266 / Ende | -264,8 | 0,2 | 1,3 | 0,0 | -4,8 | 0,7 |
| | 283 / Anfang | -2,6 | 0,0 | 0,4 | 0,0 | 0,0 | 0,0 |
| | 286 / Ende | 12,8 | 0,0 | 0,7 | 0,0 | 0,0 | 0,0 |
| | 512 / Ende | -16,3 | 0,0 | 0,3 | 0,0 | 0,0 | 0,0 |
| CO11(20) | 266 / Anfang | 21,4 | 0,1 | -1,4 | 0,0 | 1,2 | 0,5 |
| | 266 / Ende | -32,2 | -0,1 | 0,3 | 0,0 | -1,2 | -0,5 |
| | 283 / Anfang | 1,7 | 0,0 | 0,4 | 0,0 | 0,0 | 0,0 |
| | 286 / Ende | -10,7 | 0,0 | 0,6 | 0,0 | 0,0 | 0,0 |
| | 512 / Ende | 14,0 | 0,0 | 0,2 | 0,0 | 0,0 | 0,0 |
| CO11(21) | 266 / Anfang | 58,6 | 0,1 | -1,9 | 0,0 | 1,5 | 0,5 |

| Name | Bauteil | N [kN] | Vy [kN] | Vz [kN] | Mx [kNm] | My [kNm] | Mz [kNm] |
|---|---|---|---|---|---|---|---|
| | 266 / Ende | -69,5 | -0,1 | 0,4 | 0,0 | -1,4 | -0,5 |
| | 283 / Anfang | 1,7 | 0,0 | 0,5 | 0,0 | 0,0 | 0,0 |
| | 286 / Ende | -10,9 | 0,0 | 0,8 | 0,0 | 0,0 | 0,0 |
| | 512 / Ende | 14,3 | 0,0 | 0,2 | 0,0 | 0,0 | 0,0 |
| CO11(4) | 266 / Anfang | -120,6 | 0,1 | -0,9 | 0,0 | -0,2 | -0,7 |
| | 266 / Ende | 133,7 | 0,2 | -0,2 | 0,0 | 0,2 | 0,7 |
| | 283 / Anfang | -2,3 | 0,0 | 0,3 | 0,0 | 0,0 | 0,0 |
| | 286 / Ende | 12,9 | 0,0 | 0,5 | 0,0 | 0,0 | 0,0 |
| | 512 / Ende | -17,0 | 0,0 | 0,3 | 0,0 | 0,0 | 0,0 |
| CO11(6) | 266 / Anfang | 392,7 | -0,1 | -2,3 | 0,0 | 4,5 | -0,5 |
| | 266 / Ende | -381,6 | 0,1 | 1,2 | 0,0 | -4,6 | 0,5 |
| | 283 / Anfang | -1,7 | 0,0 | 0,3 | 0,0 | 0,0 | 0,0 |
| | 286 / Ende | 11,0 | 0,0 | 0,5 | 0,0 | 0,0 | 0,0 |
| | 512 / Ende | -14,4 | 0,0 | 0,2 | 0,0 | 0,0 | 0,0 |
| CO11(8) | 266 / Anfang | -143,1 | 0,2 | -0,6 | 0,0 | -1,3 | 0,4 |
| | 266 / Ende | 133,2 | -0,1 | -0,5 | 0,0 | 1,3 | -0,4 |
| | 283 / Anfang | 1,6 | 0,0 | 0,4 | 0,0 | 0,0 | 0,0 |
| | 286 / Ende | -9,9 | 0,0 | 0,6 | 0,0 | 0,0 | 0,0 |
| | 512 / Ende | 12,9 | 0,0 | 0,2 | 0,0 | 0,0 | 0,0 |
| CO11(9) | 266 / Anfang | 486,8 | 0,0 | -3,4 | 0,0 | 8,0 | -0,7 |
| | 266 / Ende | -474,8 | 0,2 | 1,9 | 0,0 | -8,0 | 0,7 |
| | 283 / Anfang | -2,8 | 0,0 | 0,4 | 0,0 | 0,0 | 0,0 |
| | 286 / Ende | 12,6 | -0,1 | 0,7 | 0,0 | 0,0 | 0,0 |
| | 512 / Ende | -15,5 | 0,0 | 0,3 | 0,0 | 0,0 | 0,0 |
| CO11(11) | 266 / Anfang | 82,1 | 0,1 | -2,2 | 0,0 | 2,6 | -0,7 |
| | 266 / Ende | -69,2 | 0,2 | 0,7 | 0,0 | -2,6 | 0,7 |
| | 283 / Anfang | -2,5 | 0,0 | 0,4 | 0,0 | 0,0 | 0,0 |
| | 286 / Ende | 13,0 | 0,0 | 0,7 | 0,0 | 0,0 | 0,0 |
| | 512 / Ende | -16,8 | 0,0 | 0,3 | 0,0 | 0,0 | 0,0 |

### Fehlende Lasten

| Name | X [kN] | Y [kN] | Z [kN] | Mx [kNm] | My [kNm] | Mz [kNm] |
|---|---|---|---|---|---|---|
| CO11(32) | 0,0 | 0,0 | 0,0 | 1,3 | -0,1 | 0,2 |
| CO9(33) | -2,7 | -2,6 | 0,0 | -3,8 | 0,4 | -0,5 |
| CO11(34) | 0,0 | 0,0 | 0,0 | -0,9 | 0,0 | -0,2 |
| CO11(35) | 0,0 | 0,0 | 0,0 | 1,2 | 0,0 | 0,2 |
| CO11(36) | 0,0 | 0,0 | 0,0 | -1,4 | 0,1 | -0,2 |
| CO11(37) | 0,0 | 0,0 | 0,0 | 1,3 | -0,1 | 0,2 |
| CO11(38) | 0,0 | 0,0 | 0,0 | -1,2 | 0,1 | -0,2 |
| CO11(39) | 0,0 | 0,0 | 0,0 | 1,2 | 0,0 | 0,2 |
| CO11(40) | 0,0 | 0,0 | 0,0 | 1,3 | -0,1 | 0,2 |
| CO11(41) | 0,0 | 0,0 | 0,0 | 1,3 | 0,0 | 0,2 |
| CO11(23) | 0,0 | 0,0 | 0,0 | 1,3 | 0,0 | 0,2 |
| CO11(25) | 0,0 | 0,0 | -0,1 | -1,3 | 0,1 | -0,2 |
| CO11(26) | 0,0 | 0,0 | 0,0 | -1,0 | 0,0 | -0,2 |
| CO11(29) | 0,0 | 0,0 | 0,0 | -1,2 | 0,1 | -0,2 |
| CO11(12) | 0,0 | 0,0 | 0,0 | -1,3 | 0,1 | -0,2 |
| CO11(13) | 0,0 | 0,0 | 0,0 | 1,2 | 0,0 | 0,2 |
| CO11(15) | 0,0 | 0,0 | 0,0 | -1,4 | 0,1 | -0,2 |
| CO11(16) | 0,0 | 0,0 | -0,1 | -1,3 | 0,1 | -0,2 |
| CO11(17) | 0,0 | 0,0 | 0,0 | 1,1 | 0,0 | 0,2 |
| CO11(19) | 0,0 | 0,0 | 0,0 | 1,3 | 0,0 | 0,2 |
| CO11(20) | 0,0 | 0,0 | 0,0 | -1,0 | 0,0 | -0,2 |
| CO11(21) | 0,0 | 0,0 | 0,0 | -1,1 | 0,0 | -0,2 |
| CO11(4) | 0,0 | 0,0 | 0,0 | 1,3 | -0,1 | 0,2 |
| CO11(6) | 0,0 | 0,0 | 0,0 | 1,1 | 0,0 | 0,2 |
| CO11(8) | 0,0 | 0,0 | 0,0 | -1,0 | 0,0 | -0,2 |
| CO11(9) | 0,0 | 0,0 | 0,0 | 1,2 | 0,0 | 0,2 |
| CO11(11) | 0,0 | 0,0 | 0,0 | 1,3 | 0,0 | 0,2 |

## Nachweis

### Übersicht

| Name | Wert | Nachweisstatus |
|---|---|---|
| Berechnung | 100,0% | OK |
| Platten | 0,0 < 5,0% | OK |
| Lokale Verformung | 0,2 < 3% | OK |
| Schrauben | 49,7 < 100% | OK |
| Schweißnähte | 43,0 < 100% | OK |
| Beulen | Nicht berechnet | |

## Platten

| Name | Material | $t_p$ [mm] | Lasten | $\sigma_{Ed}$ [MPa] | $\varepsilon_{Pl}$ [%] | $\sigma_{c,Ed}$ [MPa] | Status |
|---|---|---|---|---|---|---|---|
| 266-bfl 1 | Baustahl S 355 | 13,5 | CO11(35) | 65,4 | 0,0 | 0,0 | OK |
| 266-tfl 1 | Baustahl S 355 | 13,5 | CO11(35) | 79,0 | 0,0 | 0,0 | OK |
| 266-w 1 | Baustahl S 355 | 8,6 | CO11(39) | 78,9 | 0,0 | 0,0 | OK |
| 283 | Baustahl S 355 | 4,0 | CO9(33) | 55,8 | 0,0 | 0,0 | OK |
| 286 | Baustahl S 355 | 4,0 | CO9(33) | 98,5 | 0,0 | 0,0 | OK |
| 512 | Baustahl S 355 | 2,9 | CO9(33) | 277,2 | 0,0 | 0,0 | OK |
| Rippe1a | S 355 | 15,0 | CO9(33) | 57,5 | 0,0 | 7,9 | OK |
| Rippe1b | S 355 | 15,0 | CO9(33) | 28,2 | 0,0 | 2,7 | OK |
| Verbindungsblech1 | S 355 | 10,0 | CO9(33) | 82,2 | 0,0 | 8,3 | OK |
| Verbindungsblech2a | S 355 | 10,0 | CO9(33) | 173,4 | 0,0 | 11,7 | OK |
| Verbindungsblech2b | S 355 | 10,0 | CO9(33) | 173,1 | 0,0 | 19,8 | OK |
| Verbindungsblech3 | S 355 | 10,0 | CO9(33) | 43,2 | 0,0 | 2,0 | OK |

**Bemessungsdaten**

| Material | $f_y$ [MPa] | $\varepsilon_{lim}$ [%] |
|---|---|---|
| Baustahl S 355 | 355,0 | 5,0 |
| S 355 | 355,0 | 5,0 |

**Erläuterung von Symbolen**

| | |
|---|---|
| $t_p$ | Plattendicke |
| $\sigma_{Ed}$ | Vergleichsspannung |
| $\varepsilon_{Pl}$ | Plastische Dehnung |
| $\sigma_{c,Ed}$ | Kontaktspannung |
| $f_y$ | Streckgrenze |
| $\varepsilon_{lim}$ | Grenzwert plastische Dehnung |

## Lokale Verformung

| Name | $d_0$ [mm] | Lasten | $\delta$ [mm] | $\delta_{lim}$ [mm] | $\delta/d_0$ [%] | Nachweisstatus |
|---|---|---|---|---|---|---|
| 283 | 102 | CO11(11) | 0 | 3 | 0,0 | OK |
| 286 | 102 | CO11(11) | 0 | 3 | 0,0 | OK |
| 512 | 102 | CO9(33) | 0 | 3 | 0,2 | OK |

**Erläuterung von Symbolen**

| | |
|---|---|
| $d_0$ | Querschnittsgröße |
| $\delta$ | Lokale Verformung im Querschnitt |
| $\delta_{lim}$ | Zulässige Verformung |

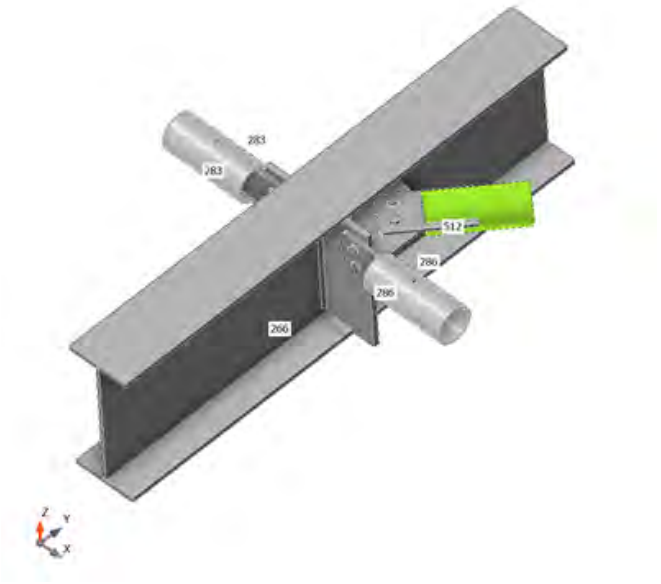


*Gesamt, CO9(33)*

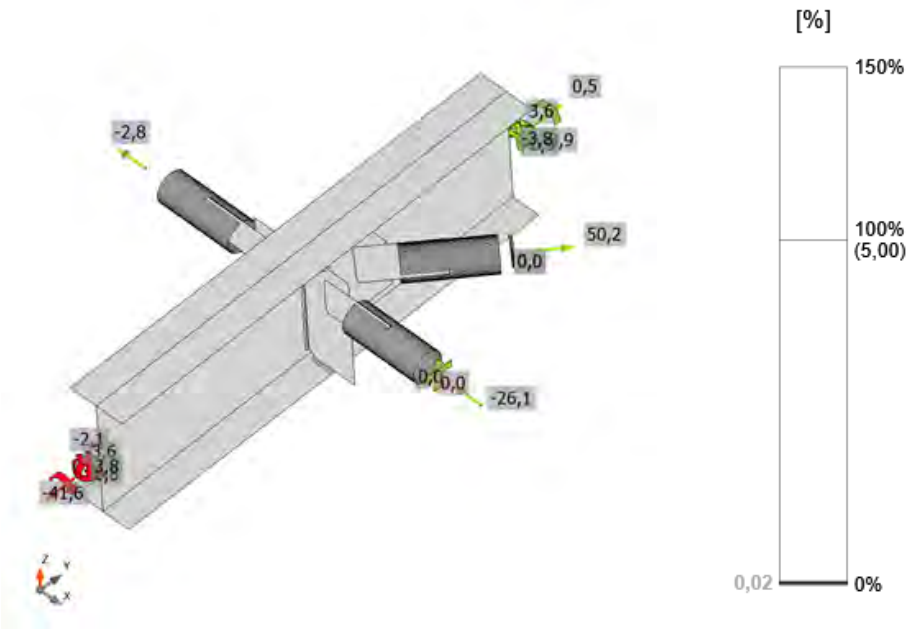


*Dehnung, CO9(33)*

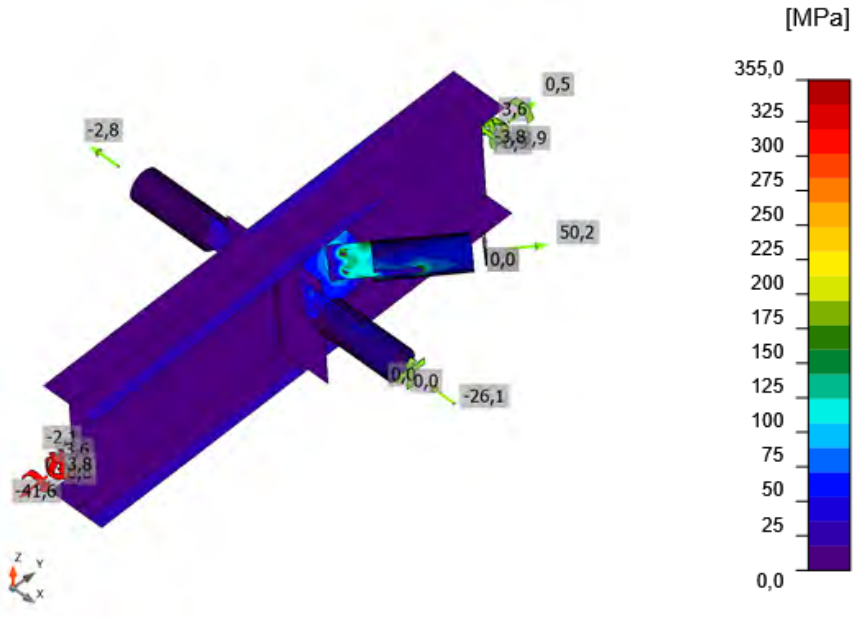


*Vergleichsspannung, CO9(33)*

## Schrauben

| Form | Position | Klasse | Lasten | $F_{t,Ed}$ [kN] | $F_{v,Ed}$ [kN] | $F_{b,Rd}$ [kN] | $Ut_t$ [%] | $Ut_s$ [%] | $Ut_{ts}$ [%] | Konstruktionsregeln | Status |
|---|---|---|---|---|---|---|---|---|---|---|---|
| 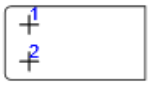 | B1 | M16 8.8 - 1 | CO9(33) | 4,7 | 15,8 | 156,8 | 5,2 | 26,3 | 30,0 | OK | OK |
| | B2 | M16 8.8 - 1 | CO9(33) | 3,9 | 10,3 | 156,8 | 4,3 | 17,0 | 20,1 | OK | OK |
| 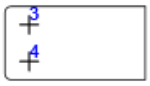 | B3 | M16 8.8 - 1 | CO9(33) | 3,3 | 22,2 | 116,1 | 3,6 | 36,8 | 39,4 | OK | OK |
| | B4 | M16 8.8 - 1 | CO9(33) | 4,2 | 28,0 | 116,1 | 4,6 | 46,4 | 49,7 | OK | OK |
| | B5 | M16 8.8 - 1 | CO11(16) | 0,3 | 3,0 | 156,8 | 0,3 | 5,0 | 5,2 | OK | OK |
| | B6 | M16 8.8 - 1 | CO9(33) | 1,4 | 4,1 | 116,1 | 1,5 | 6,8 | 7,9 | OK | OK |

**Bemessungsdaten**

| Klasse | $F_{t,Rd}$ [kN] | $B_{p,Rd}$ [kN] | $F_{v,Rd}$ [kN] |
|---|---|---|---|
| M16 8.8 - 1 | 90,4 | 187,5 | 60,3 |

**Erläuterung von Symbolen**

| | |
|---|---|
| $F_{t,Ed}$ | Zugkraft |
| $F_{v,Ed}$ | Resultierende der Schraubenscherkräfte Vy und Vz in Scherebenen |
| $F_{b,Rd}$ | Lochleibungstragfähigkeit der Platte nach EN 1993-1-8 Tab. 3.4 |
| $Ut_t$ | Ausnutzung unter Zug |
| $Ut_s$ | Ausnutzung unter Schub |
| $Ut_{ts}$ | Interaktion von Zug und Schub EN_1993-1-8 Tabelle 3.4 |
| $F_{t,Rd}$ | Zugtragfähigkeit der Schraube nach EN 1993-1-8 Tabelle 3.4 |
| $B_{p,Rd}$ | Durchstanztragfähigkeit nach EN 1993-1-8 Tabelle 3.4 |
| $F_{v,Rd}$ | Schertragfähigkeit der Schraube nach EN 1993-1-8 Tabelle 3.4 |

## Schweißnähte

| Position | Kante | $T_w$ [mm] | L [mm] | Lasten | $\sigma_{w,Ed}$ [MPa] | $\varepsilon_{Pl}$ [%] | $\sigma_{\perp}$ [MPa] | $\tau_{\perp}$ [MPa] | $\tau_{\parallel}$ [MPa] | Ut [%] | $Ut_c$ [%] | Konstruktionsregeln | Status |
|---|---|---|---|---|---|---|---|---|---|---|---|---|---|
| 266-bfl 1 | Rippe1a | ◢ 6,0 ◣ | 65 | CO11(35) | 33,9 | 0,0 | 9,7 | 7,7 | 17,1 | 7,8 | 7,8 | OK | OK |
| | | ◢ 6,0 ◣ | 65 | CO11(36) | 33,2 | 0,0 | -5,5 | 4,2 | 18,4 | 7,6 | 6,9 | OK | OK |
| 266-w 1 | Rippe1a | ◢ 6,0 ◣ | 331 | CO11(35) | 31,1 | 0,0 | 13,0 | 8,0 | -14,2 | 7,1 | 6,2 | OK | OK |
| | | ◢ 6,0 ◣ | 331 | CO11(35) | 26,0 | 0,0 | 8,9 | -9,0 | -10,9 | 6,0 | 6,0 | OK | OK |
| 266-tfl 1 | Rippe1a | ◢ 6,0 ◣ | 65 | CO11(35) | 37,7 | 0,0 | -3,8 | -3,6 | 21,4 | 8,7 | 8,7 | OK | OK |
| | | ◢ 6,0 ◣ | 65 | CO11(36) | 37,0 | 0,0 | -5,1 | 5,0 | -20,6 | 8,5 | 8,5 | OK | OK |
| 266-bfl 1 | Rippe1b | ◢ 6,0 ◣ | 65 | CO11(36) | 29,5 | 0,0 | -2,6 | -2,0 | -16,9 | 6,8 | 6,8 | OK | OK |
| | | ◢ 6,0 ◣ | 65 | CO11(35) | 27,1 | 0,0 | 7,7 | -8,4 | -12,4 | 6,2 | 6,2 | OK | OK |
| 266-w 1 | Rippe1b | ◢ 6,0 ◣ | 331 | CO11(36) | 26,2 | 0,0 | 8,9 | 8,3 | 11,5 | 6,0 | 6,0 | OK | OK |
| | | ◢ 6,0 ◣ | 331 | CO11(35) | 25,1 | 0,0 | 9,3 | -9,4 | 9,6 | 5,8 | 5,8 | OK | OK |
| 266-tfl 1 | Rippe1b | ◢ 6,0 ◣ | 65 | CO11(35) | 34,1 | 0,0 | -2,8 | -2,7 | 19,4 | 7,8 | 7,8 | OK | OK |
| | | ◢ 6,0 ◣ | 65 | CO11(36) | 37,9 | 0,0 | -4,8 | 4,6 | -21,2 | 8,7 | 8,7 | OK | OK |
| Verbindungsblech1 | 286-arc 16 | ◢ 4,0 | 119 | CO9(33) | 62,4 | 0,0 | 15,1 | -0,4 | -35,0 | 14,3 | 10,6 | OK | OK |
| Verbindungsblech1 | 286-arc 18 | ◢ 4,0 | 119 | CO9(33) | 62,3 | 0,0 | 14,6 | 0,1 | 34,9 | 14,3 | 8,5 | OK | OK |
| Verbindungsblech1 | 286-arc 48 | ◢ 4,0 | 119 | CO9(33) | 87,5 | 0,0 | 16,6 | -1,7 | -49,6 | 20,1 | 14,1 | OK | OK |
| Verbindungsblech1 | 286-arc 50 | ◢ 4,0 | 119 | CO9(33) | 87,4 | 0,0 | 16,5 | -1,5 | 49,5 | 20,1 | 12,4 | OK | OK |
| 266-w 1 | Verbindungsblech2a | ◢ 4,0 ◣ | 209 | CO11(36) | 103,0 | 0,0 | -16,2 | -11,4 | 57,6 | 23,7 | 11,9 | OK | OK |
| | | ◢ 4,0 ◣ | 209 | CO11(39) | 106,9 | 0,0 | -19,6 | 15,2 | -58,7 | 24,5 | 12,9 | OK | OK |
| Rippe1a | Verbindungsblech2a | ◢ 4,0 ◣ | 159 | CO11(35) | 71,9 | 0,0 | -32,4 | 32,0 | -18,6 | 16,5 | 10,3 | OK | OK |
| | | ◢ 4,0 ◣ | 159 | CO9(33) | 95,3 | 0,0 | 55,8 | 44,0 | -7,3 | 21,9 | 13,6 | OK | OK |
| Verbindungsblech2b | 512-arc 34 | ◢ 4,0 | 119 | CO9(33) | 181,4 | 0,0 | -22,9 | 6,6 | 103,7 | 41,6 | 28,9 | OK | OK |
| Verbindungsblech2b | 512-arc 36 | ◢ 4,0 | 119 | CO9(33) | 187,1 | 0,0 | -41,0 | 5,5 | -105,3 | 43,0 | 23,8 | OK | OK |
| Verbindungsblech2b | 512-arc 62 | ◢ 4,0 | 119 | CO9(33) | 165,4 | 0,0 | -34,6 | 6,0 | 93,2 | 38,0 | 24,0 | OK | OK |

| Position | Kante | $T_w$ [mm] | L [mm] | Lasten | $\sigma_{w,Ed}$ [MPa] | $\varepsilon_{Pl}$ [%] | $\sigma_{\perp}$ [MPa] | $\tau_{\perp}$ [MPa] | $\tau_{\parallel}$ [MPa] | Ut [%] | $Ut_c$ [%] | Konstruktionsregeln | Status |
|---|---|---|---|---|---|---|---|---|---|---|---|---|---|
| Verbindungsblech2b | 512-arc 64 | ◢ 4,0 | 119 | CO9(33) | 148,5 | 0,0 | -35,3 | 4,1 | -83,2 | 34,1 | 20,8 | OK | OK |
| Verbindungsblech3 | 283-arc 16 | ◢ 4,0 | 119 | CO9(33) | 30,5 | 0,0 | 9,2 | -6,9 | -15,3 | 7,0 | 6,2 | OK | OK |
| Verbindungsblech3 | 283-arc 18 | ◢ 4,0 | 119 | CO9(33) | 33,6 | 0,0 | -8,6 | 7,4 | -17,2 | 7,7 | 6,1 | OK | OK |
| Verbindungsblech3 | 283-arc 48 | ◢ 4,0 | 119 | CO9(33) | 23,0 | 0,0 | -6,4 | 5,3 | 11,6 | 5,3 | 5,3 | OK | OK |
| Verbindungsblech3 | 283-arc 50 | ◢ 4,0 | 119 | CO9(33) | 41,6 | 0,0 | 12,7 | -9,7 | 20,7 | 9,6 | 6,8 | OK | OK |

**Bemessungsdaten**

| Material | $f_u$ [MPa] | $\beta_w$ [-] | $\sigma_{w,Rd}$ [MPa] | 0.9 σ [MPa] |
|---|---|---|---|---|
| S 355 | 490,0 | 0,90 | 435,6 | 352,8 |

**Erläuterung von Symbolen**

| | |
|---|---|
| $T_w$ | Nahtdicke a |
| L | Länge |
| $\sigma_{w,Ed}$ | Vergleichsspannung |
| $\varepsilon_{Pl}$ | Dehnung |
| $\sigma_{\perp}$ | Senkrechte Spannung |
| $\tau_{\perp}$ | Scherspannung senkrecht zur Schweißnahtachse |
| $\tau_{\parallel}$ | Scherspannung parallel zur Schweißnahtachse |
| Ut | Ausnutzung |
| $Ut_c$ | Schätzung der Schweißnahtkapazität |
| ◢ | Kehlnaht |
| $f_u$ | Grenzfestigkeit der Schweißnaht |
| $\beta_w$ | Korrelationsfaktor nach EN 1993-1-8 Tab. 4.1 |
| $\sigma_{w,Rd}$ | Tragfähigkeit der Schweißnaht |
| 0.9 σ | Senkrechter Spannungswiderstand - 0.9*fu / γM2 |

## Beulen

**Die Beulanalyse wurde nicht berechnet.**

## Normeinstellungen

| Position | Wert | Einheit | Bezug |
|---|---|---|---|
| Sicherheitsfaktor $\gamma_{M0}$ | 1,00 | - | EN 1993-1-1 – 6.1 |
| Sicherheitsfaktor $\gamma_{M1}$ | 1,00 | - | EN 1993-1-1 – 6.1 |
| Sicherheitsfaktor $\gamma_{M2}$ | 1,25 | - | EN 1993-1-1 – 6.1 |
| Sicherheitsfaktor $\gamma_{M3}$ | 1,25 | - | EN 1993-1-8 – Table 2.1 |
| Sicherheitsfaktor $\gamma_{C}$ | 1,50 | - | EN 1992-1-1 – 2.4.2.4 |
| Sicherheitsfaktor $\gamma_{Inst}$ | 1,20 | - | EN 1992-4 – Table 4.1 |
| Verbindungskoeffizient βj | 0,67 | - | EN 1993-1-8 – 6.2.5(7) |
| Wirksame Fläche - Einfluss der Netzgröße | 0,10 | - | |
| Reibungsbeiwert - Beton | 0,25 | - | EN 1993-1-8 |
| Reibungskoeffizient bei gleitfesten Verbindungen | 0,30 | - | EN 1993-1-8 – Table 3.7 |
| Plastische Dehnung - Grenzwert | 0,05 | - | EN 1993-1-5 |
| Konstruktionsregeln | Ja | | |
| Distance between bolts [d0] | 2,20 | - | EN 1993-1-8 – Table 3.3 |
| Distance between bolts and edge [d0] | 1,20 | - | EN 1993-1-8 – Table 3.3 |
| Nachweis der Tragfähigkeit bei Betonausbruch | Beide | | |
| Berechnetes αb für Lochleibungsnachweis anwenden. | Ja | | EN 1993-1-8 – Table 3.4 |
| Gerissener Beton | Ja | | EN 1992-4 |
| Überprüfen der lokalen Verformung | Ja | | |
| Lokale Verformung - Grenzwert | 0,03 | - | CIDECT DG 1, 3 – 1.1 |
| Geometrische Nichtlinearität (GMNA) | Ja | | Analyse mit großen Verformungen für Verbindungen mit Hohlprofilen |
| Ausgesteiftes System | Nein | | EN 1993-1-8 – 5.2.2.5 |

## Projektdaten

| | |
|---|---|
| Projektname | IdeaStatiCa-Stadion_Fazanerija_JK-6_BR - 1085 |
| Projektnummer | Detajl D8-O3 |
| Autor | mag. Igor Gorup dipl.ing. |
| Beschreibung | |
| Datum | 18.06.2025 |
| Norm | EN |

## Material

| | |
|---|---|
| Stahl | Baustahl S 355, S 355 |

# Projektposition 1085

## Bemessung

| | |
|---|---|
| Name | 1085 |
| Beschreibung | |
| Berechnung | Spannung, Dehnung/ Lasten im Gleichgewicht |

### Bauteile

#### Geometrie

| Name | Querschnitt | β – Rotation [°] | Y - Rotation [°] | α - Rotation [°] | Abstand ex [mm] | Abstand ey [mm] | Abstand ez [mm] |
|---|---|---|---|---|---|---|---|
| 88 | 6 - IPE200 | -180,0 | 0,0 | -180,0 | 0 | 0 | 0 |
| 138 | 6 - IPE200 | -180,0 | 0,0 | -180,0 | 0 | 0 | 0 |
| 183 | 6 - IPE200 | -90,0 | 0,7 | -180,0 | 50 | 0 | 0 |

#### Auflager und Kräfte

| Name | Auflager | Kräfte in | X [mm] |
|---|---|---|---|
| 88 / anfang | | Position | 0 |
| 138 / ende | | Position | 0 |
| 183 / anfang | N-Vy-Vz-Mx-My-Mz | Position | 0 |

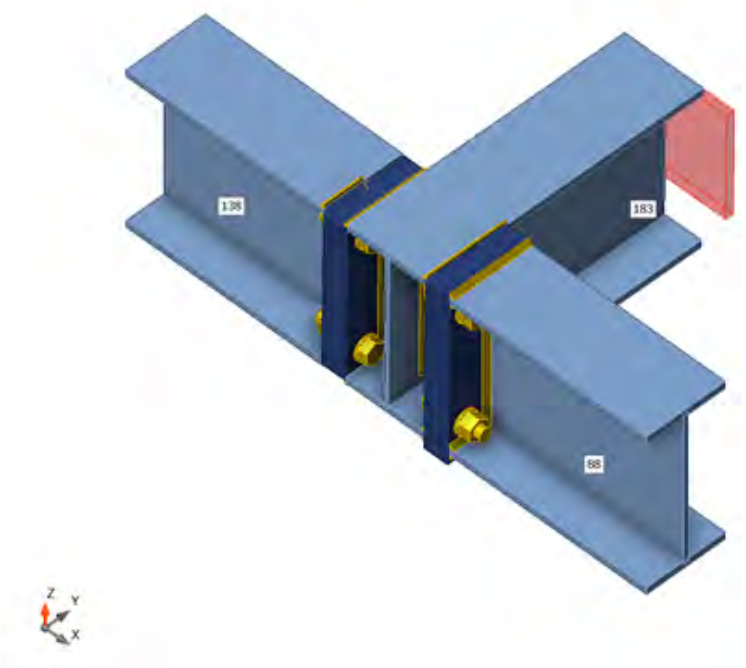


### Querschnitte

| Name | Material |
|---|---|
| 6 - IPE200 | Baustahl S 355 |

## Schrauben

| Name | Durchmesser [mm] | $f_y$ [MPa] | $f_u$ [MPa] | Bruttofläche [$mm^2$] |
|---|---|---|---|---|
| M16 8.8 | 16 | 640,0 | 800,0 | 201 |

## Lasteinwirkungen (Kräfte im Gleichgewicht)

| Name | Bauteil | N [kN] | Vy [kN] | Vz [kN] | Mx [kNm] | My [kNm] | Mz [kNm] |
|---|---|---|---|---|---|---|---|
| CO11(31) | 88 / Anfang | 1,9 | 3,0 | 14,8 | 0,0 | 20,3 | -1,7 |
| | 138 / Ende | -3,0 | 3,1 | 16,4 | 0,0 | -20,3 | 1,9 |
| | 183 / Anfang | 6,5 | 1,1 | -31,1 | 0,0 | 0,0 | -0,2 |
| CO11(32) | 88 / Anfang | -0,3 | -1,2 | 2,6 | 0,0 | 2,8 | 0,8 |
| | 138 / Ende | -0,1 | -1,1 | 2,2 | 0,0 | -2,8 | -0,6 |
| | 183 / Anfang | -2,3 | 0,4 | -4,8 | 0,0 | 0,0 | -0,2 |
| CO9(33) | 88 / Anfang | -0,6 | -0,2 | 0,0 | 0,0 | -0,1 | 0,8 |
| | 138 / Ende | -0,5 | 0,2 | 0,0 | 0,0 | 0,0 | 0,9 |
| | 183 / Anfang | 1,3 | 2,6 | 0,1 | 0,0 | 0,0 | -1,7 |
| CO11(34) | 88 / Anfang | 2,0 | 1,8 | 16,8 | 0,0 | 23,4 | -0,9 |
| | 138 / Ende | -3,2 | 1,9 | 18,8 | 0,0 | -23,4 | 1,2 |
| | 183 / Anfang | 4,0 | 1,2 | -35,5 | 0,0 | 0,0 | -0,3 |
| CO11(35) | 88 / Anfang | 0,9 | 1,8 | 14,0 | 0,0 | 19,6 | -1,1 |
| | 138 / Ende | -1,5 | 1,8 | 15,7 | 0,0 | -19,5 | 1,1 |
| | 183 / Anfang | 4,0 | 0,5 | -29,7 | 0,0 | 0,0 | 0,0 |
| CO11(36) | 88 / Anfang | 2,6 | -0,1 | 13,2 | 0,0 | 18,6 | 0,4 |
| | 138 / Ende | -4,2 | 0,1 | 14,9 | 0,0 | -18,6 | 0,4 |
| | 183 / Anfang | 0,3 | 1,6 | -28,1 | 0,0 | 0,0 | -0,8 |
| CO11(37) | 88 / Anfang | 2,3 | 1,8 | 11,5 | 0,0 | 15,8 | -0,9 |
| | 138 / Ende | -3,8 | 1,9 | 12,8 | 0,0 | -15,9 | 1,3 |
| | 183 / Anfang | 4,0 | 1,5 | -24,2 | 0,0 | 0,0 | -0,4 |
| CO11(38) | 88 / Anfang | 2,3 | -0,1 | 10,5 | 0,0 | 14,8 | 0,4 |
| | 138 / Ende | -3,7 | 0,1 | 11,9 | 0,0 | -14,8 | 0,3 |
| | 183 / Anfang | 0,2 | 1,4 | -22,4 | 0,0 | 0,0 | -0,7 |
| CO11(39) | 88 / Anfang | 2,6 | -0,1 | 10,5 | 0,0 | 14,8 | 0,4 |
| | 138 / Ende | -4,2 | 0,2 | 11,9 | 0,0 | -14,8 | 0,4 |
| | 183 / Anfang | 0,3 | 1,7 | -22,4 | 0,0 | 0,0 | -0,8 |
| CO11(40) | 88 / Anfang | -0,4 | -1,2 | 5,3 | 0,0 | 6,6 | 0,8 |
| | 138 / Ende | -0,1 | -1,1 | 5,2 | 0,0 | -6,6 | -0,6 |
| | 183 / Anfang | -2,3 | 0,4 | -10,5 | 0,0 | 0,0 | -0,3 |
| CO11(41) | 88 / Anfang | 0,8 | 3,1 | 9,4 | 0,0 | 12,7 | -1,9 |
| | 138 / Ende | -1,2 | 3,0 | 10,3 | 0,0 | -12,7 | 1,7 |
| | 183 / Anfang | 6,3 | 0,4 | -19,6 | 0,0 | 0,0 | 0,1 |
| CO11(18) | 88 / Anfang | 2,0 | 3,0 | 12,1 | 0,0 | 16,5 | -1,6 |
| | 138 / Ende | -3,0 | 3,1 | 13,4 | 0,0 | -16,5 | 2,0 |
| | 183 / Anfang | 6,4 | 1,1 | -25,4 | 0,0 | 0,0 | -0,4 |
| CO11(19) | 88 / Anfang | -0,4 | -1,2 | 2,6 | 0,0 | 2,8 | 0,7 |
| | 138 / Ende | -0,1 | -1,2 | 2,2 | 0,0 | -2,8 | -0,6 |
| | 183 / Anfang | -2,3 | 0,5 | -4,8 | 0,0 | 0,0 | -0,1 |
| CO11(22) | 88 / Anfang | 0,6 | -0,8 | 12,7 | 0,0 | 17,5 | 0,5 |
| | 138 / Ende | -1,5 | -0,7 | 13,9 | 0,0 | -17,5 | -0,3 |
| | 183 / Anfang | -1,1 | 0,9 | -26,6 | 0,0 | 0,0 | -0,2 |
| CO11(23) | 88 / Anfang | 2,4 | 1,7 | 14,1 | 0,0 | 19,6 | -0,8 |
| | 138 / Ende | -3,8 | 1,9 | 15,8 | 0,0 | -19,6 | 1,4 |
| | 183 / Anfang | 4,0 | 1,4 | -29,9 | 0,0 | 0,0 | -0,6 |

| Name | Bauteil | N [kN] | Vy [kN] | Vz [kN] | Mx [kNm] | My [kNm] | Mz [kNm] |
|---|---|---|---|---|---|---|---|
| CO11(24) | 88 / Anfang | 0,7 | -1,3 | 5,3 | 0,0 | 6,6 | 1,0 |
| | 138 / Ende | -1,9 | -1,1 | 5,3 | 0,0 | -6,6 | -0,4 |
| | 183 / Anfang | -2,2 | 1,2 | -10,6 | 0,0 | 0,0 | -0,6 |
| CO11(25) | 88 / Anfang | 0,8 | 3,1 | 12,0 | 0,0 | 16,5 | -1,9 |
| | 138 / Ende | -1,2 | 3,0 | 13,3 | 0,0 | -16,4 | 1,7 |
| | 183 / Anfang | 6,4 | 0,4 | -25,3 | 0,0 | 0,0 | 0,1 |
| CO11(26) | 88 / Anfang | 2,2 | -0,1 | 15,8 | 0,0 | 22,4 | 0,3 |
| | 138 / Ende | -3,7 | 0,1 | 17,9 | 0,0 | -22,4 | 0,2 |
| | 183 / Anfang | 0,4 | 1,5 | -33,7 | 0,0 | 0,0 | -0,5 |
| CO11(27) | 88 / Anfang | 1,4 | 1,8 | 16,8 | 0,0 | 23,4 | -1,0 |
| | 138 / Ende | -2,1 | 1,8 | 18,8 | 0,0 | -23,4 | 1,1 |
| | 183 / Anfang | 4,0 | 0,8 | -35,5 | 0,0 | 0,0 | -0,1 |
| CO11(28) | 88 / Anfang | 2,1 | 1,7 | 16,8 | 0,0 | 23,4 | -0,8 |
| | 138 / Ende | -3,3 | 1,9 | 18,8 | 0,0 | -23,4 | 1,3 |
| | 183 / Anfang | 4,0 | 1,2 | -35,5 | 0,0 | 0,0 | -0,5 |
| CO11(29) | 88 / Anfang | 0,6 | -1,3 | 5,3 | 0,0 | 6,7 | 0,9 |
| | 138 / Ende | -1,9 | -1,1 | 5,3 | 0,0 | -6,7 | -0,5 |
| | 183 / Anfang | -2,2 | 1,2 | -10,6 | 0,0 | 0,0 | -0,4 |
| CO11(30) | 88 / Anfang | 0,9 | 3,0 | 12,0 | 0,0 | 16,4 | -1,7 |
| | 138 / Ende | -1,2 | 3,0 | 13,3 | 0,0 | -16,4 | 1,8 |
| | 183 / Anfang | 6,4 | 0,3 | -25,2 | 0,0 | 0,0 | -0,1 |
| CO11(1) | 88 / Anfang | 2,6 | -0,1 | 10,5 | 0,0 | 14,8 | 0,4 |
| | 138 / Ende | -4,2 | 0,1 | 11,9 | 0,0 | -14,8 | 0,4 |
| | 183 / Anfang | 0,3 | 1,6 | -22,4 | 0,0 | 0,0 | -0,8 |
| CO11(8) | 88 / Anfang | -0,4 | -1,2 | 2,6 | 0,0 | 2,8 | 0,7 |
| | 138 / Ende | -0,1 | -1,1 | 2,2 | 0,0 | -2,8 | -0,6 |
| | 183 / Anfang | -2,3 | 0,5 | -4,8 | 0,0 | 0,0 | -0,1 |
| CO11(9) | 88 / Anfang | 2,0 | 3,0 | 14,8 | 0,0 | 20,3 | -1,6 |
| | 138 / Ende | -3,0 | 3,1 | 16,4 | 0,0 | -20,3 | 2,0 |
| | 183 / Anfang | 6,4 | 1,0 | -31,1 | 0,0 | 0,0 | -0,4 |
| CO11(11) | 88 / Anfang | 0,7 | -1,3 | 5,3 | 0,0 | 6,6 | 1,0 |
| | 138 / Ende | -1,9 | -1,1 | 5,3 | 0,0 | -6,6 | -0,4 |
| | 183 / Anfang | -2,2 | 1,2 | -10,6 | 0,0 | 0,0 | -0,6 |
| CO11(12) | 88 / Anfang | 0,8 | 3,1 | 9,4 | 0,0 | 12,7 | -1,9 |
| | 138 / Ende | -1,2 | 3,0 | 10,3 | 0,0 | -12,7 | 1,8 |
| | 183 / Anfang | 6,4 | 0,4 | -19,6 | 0,0 | 0,0 | 0,1 |

### Fehlende Lasten

| Name | X [kN] | Y [kN] | Z [kN] | Mx [kNm] | My [kNm] | Mz [kNm] |
|---|---|---|---|---|---|---|
| CO11(31) | 0,0 | 0,0 | 0,0 | -1,6 | 0,0 | -0,1 |
| CO11(32) | 0,0 | 0,0 | 0,0 | -0,2 | 0,0 | 0,0 |
| CO9(33) | -1,4 | -1,3 | 0,0 | 0,0 | 0,0 | -0,1 |
| CO11(34) | 0,0 | 0,0 | 0,0 | -1,8 | 0,0 | -0,1 |
| CO11(35) | 0,0 | 0,0 | 0,0 | -1,5 | 0,0 | 0,0 |
| CO11(36) | 0,0 | 0,0 | 0,0 | -1,4 | 0,0 | -0,1 |
| CO11(37) | 0,0 | 0,0 | 0,0 | -1,2 | 0,0 | -0,1 |
| CO11(38) | 0,0 | 0,0 | 0,0 | -1,1 | 0,0 | -0,1 |
| CO11(39) | 0,0 | 0,0 | 0,0 | -1,1 | 0,0 | -0,1 |
| CO11(40) | 0,0 | 0,0 | 0,0 | -0,5 | 0,0 | 0,0 |
| CO11(41) | 0,0 | 0,0 | 0,0 | -1,0 | 0,0 | 0,0 |
| CO11(18) | 0,0 | 0,0 | 0,0 | -1,3 | 0,0 | -0,1 |
| CO11(19) | 0,0 | 0,0 | 0,0 | -0,2 | 0,0 | 0,0 |
| CO11(22) | 0,0 | 0,0 | 0,0 | -1,3 | 0,0 | 0,0 |
| CO11(23) | 0,0 | 0,0 | 0,0 | -1,5 | 0,0 | -0,1 |
| CO11(24) | 0,0 | 0,0 | 0,0 | -0,5 | 0,0 | -0,1 |
| CO11(25) | 0,0 | 0,0 | 0,0 | -1,3 | 0,0 | 0,0 |
| CO11(26) | 0,0 | 0,0 | 0,0 | -1,7 | 0,0 | -0,1 |
| CO11(27) | 0,0 | 0,0 | 0,0 | -1,8 | 0,0 | 0,0 |
| CO11(28) | 0,0 | 0,0 | 0,0 | -1,8 | 0,0 | -0,1 |
| CO11(29) | 0,0 | 0,0 | 0,0 | -0,5 | 0,0 | -0,1 |
| CO11(30) | 0,0 | 0,0 | 0,0 | -1,3 | 0,0 | 0,0 |
| CO11(1) | 0,0 | 0,0 | 0,0 | -1,1 | 0,0 | -0,1 |
| CO11(8) | 0,0 | 0,0 | 0,0 | -0,2 | 0,0 | 0,0 |
| CO11(9) | 0,0 | 0,0 | 0,0 | -1,6 | 0,0 | -0,1 |
| CO11(11) | 0,0 | 0,0 | 0,0 | -0,5 | 0,0 | -0,1 |
| CO11(12) | 0,0 | 0,0 | 0,0 | -1,0 | 0,0 | 0,0 |

## Nachweis

### Übersicht

| Name | Wert | Nachweisstatus |
|---|---|---|
| Berechnung | 100,0% | OK |
| Platten | 0,1 < 5,0% | OK |
| Schrauben | 82,1 < 100% | OK |
| Schweißnähte | 98,7 < 100% | OK |
| Beulen | Nicht berechnet | |

## Platten

| Name | Material | $t_p$ [mm] | Lasten | $\sigma_{Ed}$ [MPa] | $\varepsilon_{Pl}$ [%] | $\sigma_{c,Ed}$ [MPa] | Status |
|---|---|---|---|---|---|---|---|
| 88-bfl 1 | Baustahl S 355 | 8,5 | CO11(27) | 285,6 | 0,0 | 0,0 | OK |
| 88-tfl 1 | Baustahl S 355 | 8,5 | CO11(31) | 206,9 | 0,0 | 0,0 | OK |
| 88-w 1 | Baustahl S 355 | 5,6 | CO11(27) | 252,5 | 0,0 | 0,0 | OK |
| 138-bfl 1 | Baustahl S 355 | 8,5 | CO11(26) | 198,4 | 0,0 | 0,0 | OK |
| 138-tfl 1 | Baustahl S 355 | 8,5 | CO11(26) | 246,1 | 0,0 | 0,0 | OK |
| 138-w 1 | Baustahl S 355 | 5,6 | CO11(26) | 355,3 | 0,1 | 0,0 | OK |
| 183-bfl 1 | Baustahl S 355 | 8,5 | CO11(27) | 300,0 | 0,0 | 0,0 | OK |
| 183-tfl 1 | Baustahl S 355 | 8,5 | CO11(27) | 182,2 | 0,0 | 0,0 | OK |
| 183-w 1 | Baustahl S 355 | 5,6 | CO11(34) | 71,0 | 0,0 | 0,0 | OK |
| Verschobene Stirnplatte1a | S 355 | 15,0 | CO11(27) | 335,9 | 0,0 | 59,3 | OK |
| Verschobene Stirnplatte1b | S 355 | 15,0 | CO11(27) | 354,1 | 0,0 | 59,3 | OK |
| STEIFF | S 355 | 10,0 | CO11(27) | 173,1 | 0,0 | 0,0 | OK |
| Verschobene Stirnplatte2a | S 355 | 15,0 | CO11(28) | 355,1 | 0,0 | 231,9 | OK |
| Verschobene Stirnplatte2b | S 355 | 15,0 | CO11(26) | 355,2 | 0,1 | 230,0 | OK |
| STEIFF | S 355 | 10,0 | CO11(28) | 206,1 | 0,0 | 0,0 | OK |

**Bemessungsdaten**

| Material | $f_y$ [MPa] | $\varepsilon_{lim}$ [%] |
|---|---|---|
| Baustahl S 355 | 355,0 | 5,0 |
| S 355 | 355,0 | 5,0 |

**Erläuterung von Symbolen**

| | |
|---|---|
| $t_p$ | Plattendicke |
| $\sigma_{Ed}$ | Vergleichsspannung |
| $\varepsilon_{Pl}$ | Plastische Dehnung |
| $\sigma_{c,Ed}$ | Kontaktspannung |
| $f_y$ | Streckgrenze |
| $\varepsilon_{lim}$ | Grenzwert plastische Dehnung |

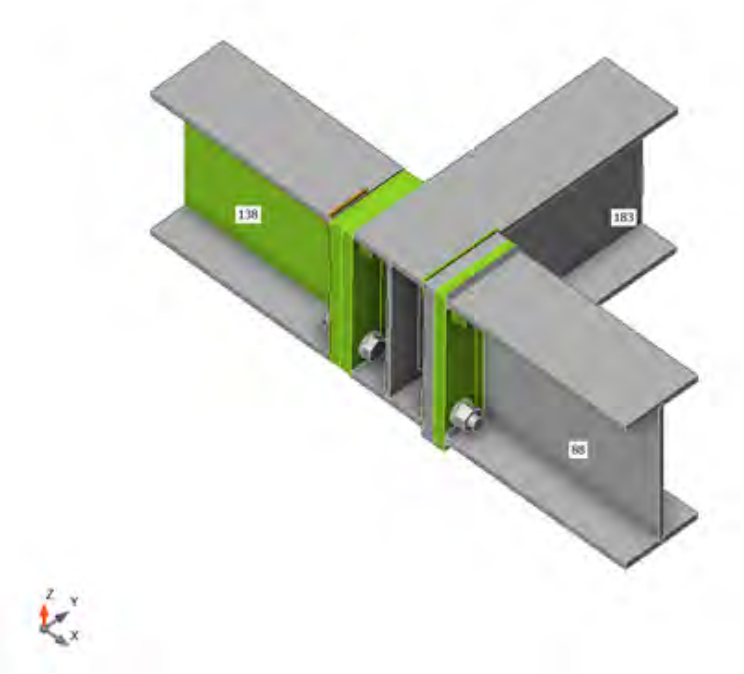


*Gesamt, CO11(26)*

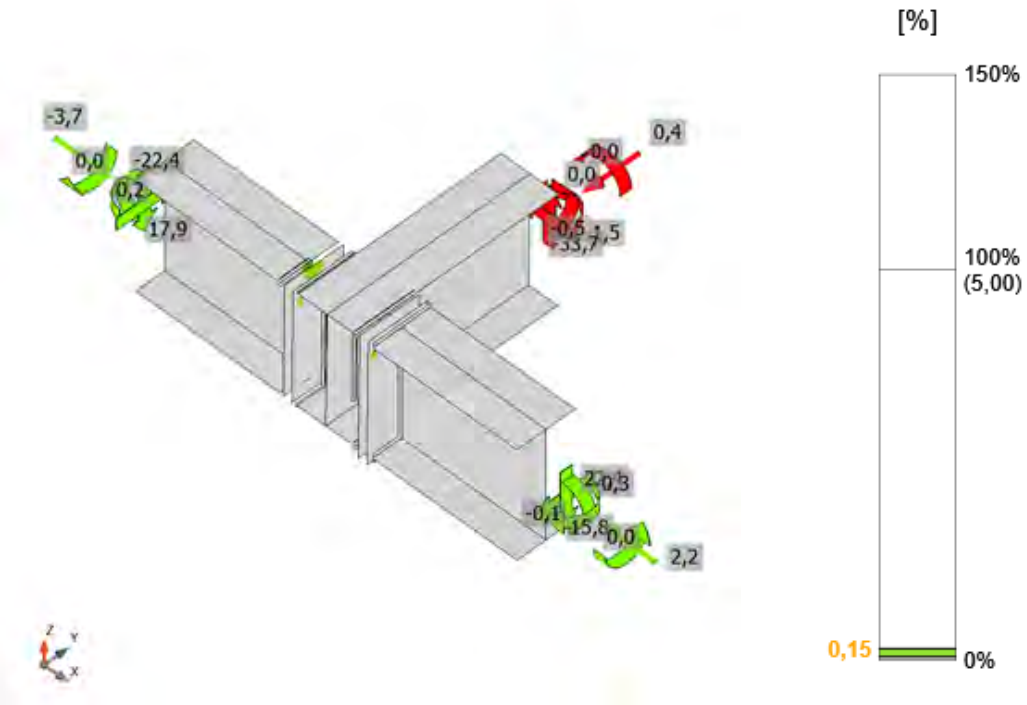


*Dehnung, CO11(26)*

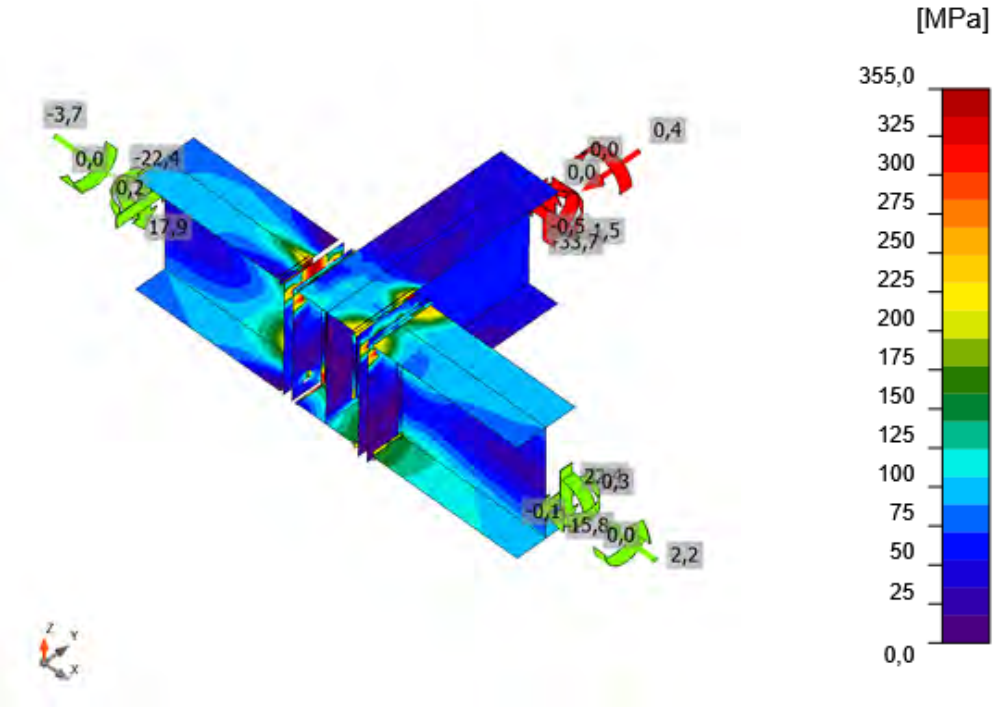


*Vergleichsspannung, CO11(26)*

## Schrauben

| Form | Position | Klasse | Lasten | $F_{t,Ed}$ [kN] | $F_{v,Ed}$ [kN] | $F_{b,Rd}$ [kN] | $Ut_t$ [%] | $Ut_s$ [%] | $Ut_{ts}$ [%] | Konstruktionsregeln | Status |
|---|---|---|---|---|---|---|---|---|---|---|---|
| 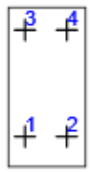 | B1 | M16 8.8 - 1 | CO11(28) | 0,0 | 4,3 | 114,2 | 0,0 | 7,1 | 7,1 | OK | OK |
| | B2 | M16 8.8 - 1 | CO11(27) | 0,0 | 4,7 | 152,5 | 0,0 | 7,9 | 7,9 | OK | OK |
| | B3 | M16 8.8 - 1 | CO11(27) | 72,5 | 3,7 | 90,0 | 80,1 | 6,1 | 63,3 | OK | OK |
| | B4 | M16 8.8 - 1 | CO11(26) | 71,1 | 3,8 | 114,4 | 78,7 | 6,3 | 62,5 | OK | OK |
| | B5 | M16 8.8 - 1 | CO11(27) | 0,0 | 5,3 | 95,9 | 0,0 | 8,7 | 8,7 | OK | OK |
| | B6 | M16 8.8 - 1 | CO11(28) | 0,0 | 5,5 | 95,9 | 0,0 | 9,2 | 9,2 | OK | OK |
| | B7 | M16 8.8 - 1 | CO11(28) | 74,2 | 3,7 | 95,9 | 82,1 | 6,1 | 64,7 | OK | OK |
| | B8 | M16 8.8 - 1 | CO11(27) | 72,9 | 4,7 | 95,9 | 80,6 | 7,8 | 65,4 | OK | OK |

**Bemessungsdaten**

| Klasse | $F_{t,Rd}$ [kN] | $B_{p,Rd}$ [kN] | $F_{v,Rd}$ [kN] |
|---|---|---|---|
| M16 8.8 - 1 | 90,4 | 281,2 | 60,3 |

**Erläuterung von Symbolen**

| | |
|---|---|
| $F_{t,Ed}$ | Zugkraft |
| $F_{v,Ed}$ | Resultierende der Schraubenscherkräfte Vy und Vz in Scherebenen |
| $F_{b,Rd}$ | Lochleibungstragfähigkeit der Platte nach EN 1993-1-8 Tab. 3.4 |
| $Ut_t$ | Ausnutzung unter Zug |
| $Ut_s$ | Ausnutzung unter Schub |
| $Ut_{ts}$ | Interaktion von Zug und Schub EN_1993-1-8 Tabelle 3.4 |
| $F_{t,Rd}$ | Zugtragfähigkeit der Schraube nach EN 1993-1-8 Tabelle 3.4 |
| $B_{p,Rd}$ | Durchstanztragfähigkeit nach EN 1993-1-8 Tabelle 3.4 |
| $F_{v,Rd}$ | Schertragfähigkeit der Schraube nach EN 1993-1-8 Tabelle 3.4 |

## Schweißnähte

| Position | Kante | $T_w$ [mm] | L [mm] | Lasten | $\sigma_{w,Ed}$ [MPa] | $\varepsilon_{Pl}$ [%] | $\sigma_{\perp}$ [MPa] | $\tau_{\perp}$ [MPa] | $\tau_{\parallel}$ [MPa] | Ut [%] | $Ut_c$ [%] | Konstruktionsregeln | Status |
|---|---|---|---|---|---|---|---|---|---|---|---|---|---|
| Verschobene Stirnplatte1a | 183-tfl 1 | ◢ 4,0 ◣ | 101 | CO11(31) | 353,0 | 0,0 | -162,2 | 181,0 | -5,3 | 81,1 | 44,8 | OK | OK |
| | | ◢ 4,0 ◣ | 101 | CO11(31) | 372,4 | 0,0 | -198,6 | -179,8 | 27,8 | 85,5 | 44,2 | OK | OK |
| Verschobene Stirnplatte1a | 183-bfl 1 | ◢ 4,0 ◣ | 101 | CO11(26) | 335,8 | 0,0 | 203,4 | -154,1 | 6,9 | 77,1 | 49,4 | OK | OK |
| | | ◢ 4,0 ◣ | 100 | CO11(31) | 207,4 | 0,0 | -10,2 | 44,1 | 111,2 | 47,6 | 27,6 | OK | OK |
| Verschobene Stirnplatte1b | 88-bfl 1 | ◢ 4,0 ◣ | 100 | CO11(27) | 279,2 | 0,0 | 153,8 | 105,2 | 83,9 | 64,1 | 50,1 | OK | OK |
| | | ◢ 4,0 ◣ | 99 | CO11(31) | 204,8 | 0,0 | -4,3 | -36,2 | 112,5 | 47,0 | 30,3 | OK | OK |
| Verschobene Stirnplatte1b | 88-tfl 1 | ◢ 4,0 ◣ | 99 | CO11(31) | 299,6 | 0,0 | -137,7 | -134,3 | 74,6 | 68,8 | 46,5 | OK | OK |
| | | ◢ 4,0 ◣ | 99 | CO11(31) | 259,4 | 0,0 | -125,4 | 131,1 | 2,8 | 59,6 | 40,5 | OK | OK |
| Verschobene Stirnplatte1b | 88-w 1 | ◢ 4,0 ◣ | 190 | CO11(27) | 288,7 | 0,0 | 139,7 | 140,2 | -40,3 | 66,3 | 42,3 | OK | OK |
| | | ◢ 4,0 ◣ | 190 | CO11(27) | 285,6 | 0,0 | 142,1 | -141,6 | 20,4 | 65,6 | 39,4 | OK | OK |
| 183-bfl 1 | STEIFF | ◢ 4,0 ◣ | 35 | CO11(27) | 172,0 | 0,0 | -8,1 | -16,1 | 97,9 | 39,5 | 29,4 | OK | OK |
| | | ◢ 4,0 ◣ | 35 | CO11(27) | 165,9 | 0,0 | -24,0 | 16,0 | -93,4 | 38,1 | 30,9 | OK | OK |
| 183-w 1 | STEIFF | ◢ 4,0 ◣ | 159 | CO11(27) | 211,4 | 0,0 | 102,0 | 103,5 | -26,9 | 48,5 | 33,0 | OK | OK |
| | | ◢ 4,0 ◣ | 159 | CO11(27) | 217,5 | 0,0 | 107,5 | -106,0 | 25,8 | 49,9 | 33,3 | OK | OK |
| 183-tfl 1 | STEIFF | ◢ 4,0 ◣ | 35 | CO11(26) | 91,8 | 0,0 | -21,5 | -25,1 | -45,0 | 21,1 | 15,2 | OK | OK |
| | | ◢ 4,0 ◣ | 35 | CO11(26) | 95,6 | 0,0 | -25,8 | 22,3 | 48,3 | 22,0 | 15,4 | OK | OK |
| Verschobene Stirnplatte1a | STEIFF | ◢ 4,0 ◣ | 181 | CO11(28) | 341,0 | 0,0 | 163,3 | 172,7 | 7,1 | 78,3 | 46,7 | OK | OK |
| | | ◢ 4,0 ◣ | 181 | CO11(27) | 353,4 | 0,0 | 186,0 | -173,3 | 8,1 | 81,1 | 46,7 | OK | OK |
| Verschobene Stirnplatte2a | 183-tfl 1 | ◢ 4,0 | 101 | CO11(9) | 427,3 | 0,3 | -239,7 | 201,4 | -33,9 | 98,1 | 61,6 | OK | OK |

| Position | Kante | $T_w$ [mm] | L [mm] | Lasten | $\sigma_{w,Ed}$ [MPa] | $\varepsilon_{Pl}$ [%] | $\sigma_{\perp}$ [MPa] | $\tau_{\perp}$ [MPa] | $\tau_{\parallel}$ [MPa] | Ut [%] | $Ut_c$ [%] | Konstruktionsregeln | Status |
|---|---|---|---|---|---|---|---|---|---|---|---|---|---|
| Verschobene Stirnplatte2a | 183-bfl 1 | ◢ 4,0 | 101 | CO11(28) | 376,8 | 0,0 | 183,4 | 164,6 | -94,9 | 86,5 | 54,1 | OK | OK |
| Verschobene Stirnplatte2b | 138-bfl 1 | ◢ 4,0 ◣ | 50 | CO11(26) | 427,0 | 0,1 | 259,8 | 195,2 | 13,2 | 98,0 | 60,0 | OK | OK |
| | | ◢ 4,0 ◣ | 50 | CO11(26) | 210,4 | 0,0 | 27,2 | -112,5 | -43,1 | 48,3 | 30,4 | OK | OK |
| Verschobene Stirnplatte2b | 138-tfl 1 | ◢ 4,0 ◣ | 50 | CO11(26) | 428,7 | 1,1 | -192,3 | -213,6 | 57,6 | 98,4 | 74,9 | OK | OK |
| | | ◢ 4,0 ◣ | 50 | CO11(26) | 428,6 | 1,0 | -225,5 | 203,2 | -54,7 | 98,4 | 77,3 | OK | OK |
| Verschobene Stirnplatte2b | 138-w 1 | ◢ 4,0 ◣ | 191 | CO11(26) | 428,7 | 1,1 | -179,4 | -224,6 | -9,4 | 98,4 | 78,8 | OK | OK |
| | | ◢ 4,0 ◣ | 191 | CO11(26) | 429,8 | 1,7 | -237,4 | 206,7 | 6,4 | 98,7 | 82,2 | OK | OK |
| 183-bfl 1 | STEIFF | ◢ 4,0 ◣ | 35 | CO11(28) | 192,7 | 0,0 | -8,7 | -2,9 | 111,1 | 44,2 | 38,1 | OK | OK |
| | | ◢ 4,0 ◣ | 35 | CO11(28) | 192,4 | 0,0 | 10,8 | -5,0 | -110,8 | 44,2 | 38,7 | OK | OK |
| 183-w 1 | STEIFF | ◢ 4,0 ◣ | 159 | CO11(27) | 219,0 | 0,0 | 106,7 | 106,2 | -30,2 | 50,3 | 33,2 | OK | OK |
| | | ◢ 4,0 ◣ | 159 | CO11(28) | 214,3 | 0,0 | 103,4 | -103,1 | 33,4 | 49,2 | 32,8 | OK | OK |
| 183-tfl 1 | STEIFF | ◢ 4,0 ◣ | 35 | CO11(26) | 208,4 | 0,0 | 10,9 | 8,4 | 119,9 | 47,8 | 35,1 | OK | OK |
| | | ◢ 4,0 ◣ | 35 | CO11(26) | 204,4 | 0,0 | 2,2 | -4,7 | -117,9 | 46,9 | 35,9 | OK | OK |
| Verschobene Stirnplatte2a | STEIFF | ◢ 4,0 ◣ | 181 | CO11(28) | 421,1 | 0,0 | 218,4 | 205,4 | -32,0 | 96,7 | 56,0 | OK | OK |
| | | ◢ 4,0 ◣ | 181 | CO11(27) | 379,6 | 0,0 | 181,4 | -192,1 | -12,9 | 87,2 | 53,1 | OK | OK |

**Bemessungsdaten**

| Material | $f_u$ [MPa] | $\beta_w$ [-] | $\sigma_{w,Rd}$ [MPa] | 0.9 σ [MPa] |
|---|---|---|---|---|
| S 355 | 490,0 | 0,90 | 435,6 | 352,8 |

**Erläuterung von Symbolen**

| | |
|---|---|
| $T_w$ | Nahtdicke a |
| L | Länge |
| $\sigma_{w,Ed}$ | Vergleichsspannung |
| $\varepsilon_{Pl}$ | Dehnung |
| $\sigma_{\perp}$ | Senkrechte Spannung |
| $\tau_{\perp}$ | Scherspannung senkrecht zur Schweißnahtachse |
| $\tau_{\parallel}$ | Scherspannung parallel zur Schweißnahtachse |
| Ut | Ausnutzung |
| $Ut_c$ | Schätzung der Schweißnahtkapazität |
| ◢ | Kehlnaht |
| $f_u$ | Grenzfestigkeit der Schweißnaht |
| $\beta_w$ | Korrelationsfaktor nach EN 1993-1-8 Tab. 4.1 |
| $\sigma_{w,Rd}$ | Tragfähigkeit der Schweißnaht |
| 0.9 σ | Senkrechter Spannungswiderstand - 0.9*fu / γM2 |

### Beulen

**Die Beulanalyse wurde nicht berechnet.**

## Normeinstellungen

| Position | Wert | Einheit | Bezug |
|---|---|---|---|
| Sicherheitsfaktor $\gamma_{M0}$ | 1,00 | - | EN 1993-1-1 – 6.1 |
| Sicherheitsfaktor $\gamma_{M1}$ | 1,00 | - | EN 1993-1-1 – 6.1 |
| Sicherheitsfaktor $\gamma_{M2}$ | 1,25 | - | EN 1993-1-1 – 6.1 |
| Sicherheitsfaktor $\gamma_{M3}$ | 1,25 | - | EN 1993-1-8 – Table 2.1 |
| Sicherheitsfaktor $\gamma_C$ | 1,50 | - | EN 1992-1-1 – 2.4.2.4 |
| Sicherheitsfaktor $\gamma_{Inst}$ | 1,20 | - | EN 1992-4 – Table 4.1 |
| Verbindungskoeffizient βj | 0,67 | - | EN 1993-1-8 – 6.2.5(7) |
| Wirksame Fläche - Einfluss der Netzgröße | 0,10 | - | |
| Reibungsbeiwert - Beton | 0,25 | - | EN 1993-1-8 |
| Reibungskoeffizient bei gleitfesten Verbindungen | 0,30 | - | EN 1993-1-8 – Table 3.7 |
| Plastische Dehnung - Grenzwert | 0,05 | - | EN 1993-1-5 |
| Konstruktionsregeln | Ja | | |
| Distance between bolts [d0] | 2,20 | - | EN 1993-1-8 – Table 3.3 |
| Distance between bolts and edge [d0] | 1,20 | - | EN 1993-1-8 – Table 3.3 |
| Nachweis der Tragfähigkeit bei Betonausbruch | Beide | | |
| Berechnetes αb für Lochleibungsnachweis anwenden. | Ja | | EN 1993-1-8 – Table 3.4 |
| Gerissener Beton | Ja | | EN 1992-4 |
| Überprüfen der lokalen Verformung | Ja | | |
| Lokale Verformung - Grenzwert | 0,03 | - | CIDECT DG 1, 3 – 1.1 |
| Geometrische Nichtlinearität (GMNA) | Ja | | Analyse mit großen Verformungen für Verbindungen mit Hohlprofilen |
| Ausgesteiftes System | Nein | | EN 1993-1-8 – 5.2.2.5 |

## Projektdaten

| | |
|---|---|
| Projektname | IdeaStatiCa-Stadion_Fazanerija_JK-6_BR - 57 |
| Projektnummer | Detajl D10-O3 |
| Autor | mag. Igor Gorup dipl. ing. |
| Beschreibung | |
| Datum | 18.06.2025 |
| Norm | EN |

## Material

| | |
|---|---|
| Stahl | Baustahl S 355, Baustahl S 235, S 355 |

# Projektposition 57

## Bemessung

| | |
|---|---|
| Name | 57 |
| Beschreibung | |
| Berechnung | Spannung, Dehnung/ Lasten im Gleichgewicht |

### Bauteile

#### Geometrie

| Name | Querschnitt | β – Rotation [°] | Y - Rotation [°] | α - Rotation [°] | Abstand ex [mm] | Abstand ey [mm] | Abstand ez [mm] |
|---|---|---|---|---|---|---|---|
| 83 | 6 - IPE200 | 0,0 | 0,0 | -180,0 | 0 | 0 | 0 |
| 96 | 6 - IPE200 | -90,0 | 0,8 | 180,0 | 0 | 0 | 0 |
| 187 | 6 - IPE200 | 0,0 | 0,0 | -180,0 | 0 | 0 | 0 |
| 476 | 529 - RO76.1X2.9 | -32,2 | 0,4 | 180,0 | 0 | 40 | -20 |
| 479 | 529 - RO76.1X2.9 | 32,2 | -0,4 | -180,0 | 0 | 40 | -20 |

#### Auflager und Kräfte

| Name | Auflager | Kräfte in | X [mm] |
|---|---|---|---|
| 83 / anfang | | Position | 0 |
| 96 / anfang | N-Vy-Vz-Mx-My-Mz | Position | 0 |
| 96 / ende | | Position | 0 |
| 187 / ende | | Position | 0 |
| 476 / ende | | Schrauben | 0 |
| 479 / ende | Mx-My-Mz | Schrauben | 0 |

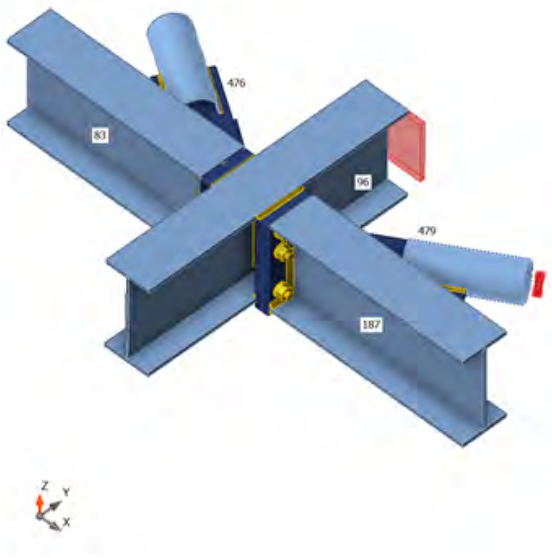


### Querschnitte

| Name | Material |
|---|---|
| 6 - IPE200 | Baustahl S 355 |
| 529 - RO76.1X2.9 | Baustahl S 355 |

## Schrauben

| Name | Durchmesser [mm] | $f_y$ [MPa] | $f_u$ [MPa] | Bruttofläche [$mm^2$] |
|---|---|---|---|---|
| M16 8.8 | 16 | 640,0 | 800,0 | 201 |
| M20 8.8 | 20 | 640,0 | 800,0 | 314 |

## Lasteinwirkungen (Kräfte im Gleichgewicht)

| Name | Bauteil | N [kN] | Vy [kN] | Vz [kN] | Mx [kNm] | My [kNm] | Mz [kNm] |
|---|---|---|---|---|---|---|---|
| CO11(47) | 83 / Anfang | -11,3 | 0,0 | 1,6 | 0,0 | 2,0 | 0,0 |
| | 96 / Anfang | -8,1 | 0,0 | 1,6 | 0,0 | -5,3 | 0,1 |
| | 96 / Ende | 7,9 | 0,0 | -5,2 | 0,0 | 5,3 | -0,2 |
| | 187 / Ende | 21,5 | 0,0 | 1,8 | 0,0 | -2,0 | 0,1 |
| | 476 / Anfang | -5,8 | 0,0 | 0,1 | 0,0 | 0,0 | 0,0 |
| | 479 / Ende | -6,3 | 0,0 | 0,1 | 0,0 | 0,0 | 0,0 |
| CO11(48) | 83 / Anfang | 4,7 | 0,1 | 24,8 | 0,0 | 30,3 | -0,2 |
| | 96 / Anfang | 13,6 | 0,0 | -24,5 | 0,0 | -15,7 | -0,1 |
| | 96 / Ende | -5,5 | 0,5 | -22,9 | 0,0 | 15,7 | 0,4 |
| | 187 / Ende | -15,2 | 0,0 | 22,3 | 0,0 | -30,3 | -0,1 |
| | 476 / Anfang | -0,5 | 0,0 | 0,2 | 0,0 | 0,0 | 0,0 |
| | 479 / Ende | 13,6 | 0,0 | 0,1 | 0,0 | 0,0 | 0,0 |
| CO11(49) | 83 / Anfang | 1,6 | 0,1 | 16,7 | 0,0 | 20,4 | -0,1 |
| | 96 / Anfang | 3,4 | 0,0 | -18,9 | 0,0 | -5,1 | 0,0 |
| | 96 / Ende | -0,4 | 0,2 | -13,1 | 0,0 | 5,1 | 0,0 |
| | 187 / Ende | 0,0 | 0,0 | 15,0 | 0,0 | -20,4 | 0,1 |
| | 476 / Anfang | -3,4 | 0,0 | 0,1 | 0,0 | 0,0 | 0,0 |
| | 479 / Ende | 1,6 | 0,0 | 0,1 | 0,0 | 0,0 | 0,0 |
| CO11(50) | 83 / Anfang | -6,7 | 0,0 | 22,7 | 0,0 | 27,9 | 0,0 |
| | 96 / Anfang | -6,5 | -0,1 | -20,2 | 0,0 | -18,5 | 0,1 |
| | 96 / Ende | 7,1 | 0,0 | -23,0 | 0,0 | 18,5 | -0,2 |
| | 187 / Ende | 13,2 | 0,0 | 20,2 | 0,0 | -27,9 | 0,1 |
| | 476 / Anfang | -3,9 | 0,0 | 0,1 | 0,0 | 0,0 | 0,0 |
| | 479 / Ende | -3,8 | 0,0 | 0,2 | 0,0 | 0,0 | 0,0 |
| CO11(51) | 83 / Anfang | -11,0 | 0,0 | 5,5 | 0,0 | 6,7 | 0,0 |
| | 96 / Anfang | -8,9 | 0,0 | -1,5 | 0,0 | -8,2 | 0,1 |
| | 96 / Ende | 8,9 | 0,0 | -9,4 | 0,0 | 8,2 | -0,2 |
| | 187 / Ende | 21,3 | 0,0 | 5,2 | 0,0 | -6,7 | 0,1 |
| | 476 / Anfang | -6,0 | 0,0 | 0,1 | 0,0 | 0,0 | 0,0 |
| | 479 / Ende | -6,2 | 0,0 | 0,2 | 0,0 | 0,0 | 0,0 |
| CO11(52) | 83 / Anfang | 4,2 | 0,1 | 12,9 | 0,0 | 15,7 | -0,1 |
| | 96 / Anfang | 7,2 | 0,0 | -15,9 | 0,0 | -2,0 | -0,1 |
| | 96 / Ende | -1,5 | 0,5 | -8,8 | 0,0 | 2,0 | 0,4 |
| | 187 / Ende | -13,4 | 0,0 | 11,6 | 0,0 | -15,7 | -0,1 |
| | 476 / Anfang | 0,6 | 0,0 | 0,1 | 0,0 | 0,0 | 0,0 |
| | 479 / Ende | 10,9 | 0,0 | 0,1 | 0,0 | 0,0 | 0,0 |
| CO11(53) | 83 / Anfang | -11,2 | 0,0 | 12,2 | 0,0 | 15,0 | 0,0 |
| | 96 / Anfang | -8,1 | 0,0 | -8,8 | 0,0 | -12,7 | 0,1 |
| | 96 / Ende | 8,6 | 0,0 | -14,9 | 0,0 | 12,7 | -0,1 |
| | 187 / Ende | 20,2 | 0,0 | 11,2 | 0,0 | -15,0 | 0,0 |
| | 476 / Anfang | -5,5 | 0,0 | 0,1 | 0,0 | 0,0 | 0,0 |
| | 479 / Ende | -5,3 | 0,0 | 0,2 | 0,0 | 0,0 | 0,0 |
| CO11(54) | 83 / Anfang | -3,6 | 0,0 | 5,4 | 0,0 | 6,6 | -0,1 |
| | 96 / Anfang | -4,0 | 0,0 | -6,6 | 0,0 | -0,1 | -0,1 |
| | 96 / Ende | 6,7 | 0,4 | -3,9 | 0,0 | 0,1 | 0,3 |
| | 187 / Ende | 0,1 | 0,0 | 4,9 | 0,0 | -6,6 | -0,1 |
| | 476 / Anfang | 0,0 | 0,0 | 0,1 | 0,0 | 0,0 | 0,0 |
| | 479 / Ende | 4,8 | 0,0 | 0,1 | 0,0 | 0,0 | 0,0 |
| CO11(55) | 83 / Anfang | -8,5 | 0,0 | 12,2 | 0,0 | 15,0 | -0,1 |
| | 96 / Anfang | -5,2 | 0,0 | -9,0 | 0,0 | -12,5 | -0,1 |
| | 96 / Ende | 8,3 | 0,3 | -14,7 | 0,0 | 12,5 | 0,2 |
| | 187 / Ende | 7,6 | -0,1 | 11,2 | 0,0 | -15,0 | -0,1 |
| | 476 / Anfang | -1,8 | 0,0 | 0,1 | 0,0 | 0,0 | 0,0 |

| Name | Bauteil | N [kN] | Vy [kN] | Vz [kN] | Mx [kNm] | My [kNm] | Mz [kNm] |
|---|---|---|---|---|---|---|---|
| | 479 / Ende | 3,3 | 0,0 | 0,1 | 0,0 | 0,0 | 0,0 |
| CO11(56) | 83 / Anfang | 4,6 | 0,1 | 16,7 | 0,0 | 20,5 | -0,2 |
| | 96 / Anfang | 6,7 | 0,0 | -19,1 | 0,0 | -4,8 | -0,1 |
| | 96 / Ende | -0,7 | 0,6 | -13,0 | 0,0 | 4,8 | 0,4 |
| | 187 / Ende | -13,9 | 0,0 | 15,0 | 0,0 | -20,5 | -0,1 |
| | 476 / Anfang | 0,6 | 0,0 | 0,2 | 0,0 | 0,0 | 0,0 |
| | 479 / Ende | 11,1 | 0,0 | 0,1 | 0,0 | 0,0 | 0,0 |
| CO11(57) | 83 / Anfang | 3,1 | 0,1 | 28,4 | 0,0 | 35,0 | -0,1 |
| | 96 / Anfang | -1,5 | -0,1 | -26,7 | 0,0 | -20,0 | 0,0 |
| | 96 / Ende | 4,5 | 0,3 | -26,9 | 0,0 | 20,0 | 0,1 |
| | 187 / Ende | -9,6 | 0,0 | 24,9 | 0,0 | -35,0 | 0,0 |
| | 476 / Anfang | 1,7 | 0,0 | 0,2 | 0,0 | 0,0 | 0,0 |
| | 479 / Ende | 6,3 | 0,0 | 0,1 | 0,0 | 0,0 | 0,0 |
| CO11(58) | 83 / Anfang | 1,0 | 0,0 | 12,9 | 0,0 | 15,7 | 0,0 |
| | 96 / Anfang | 4,6 | 0,0 | -15,8 | 0,0 | -2,2 | 0,0 |
| | 96 / Ende | -1,8 | 0,1 | -8,9 | 0,0 | 2,2 | 0,0 |
| | 187 / Ende | 0,4 | 0,0 | 11,6 | 0,0 | -15,7 | 0,0 |
| | 476 / Anfang | -3,1 | 0,0 | 0,1 | 0,0 | 0,0 | 0,0 |
| | 479 / Ende | 1,6 | 0,0 | 0,1 | 0,0 | 0,0 | 0,0 |
| CO9(59) | 83 / Anfang | 9,1 | -0,1 | 0,0 | 0,0 | 0,0 | 0,4 |
| | 96 / Anfang | 13,1 | -0,4 | -1,1 | 0,0 | 1,7 | 0,7 |
| | 96 / Ende | -5,1 | -0,8 | 1,1 | 0,0 | -1,7 | -1,4 |
| | 187 / Ende | -21,6 | 0,1 | 0,0 | 0,0 | 0,0 | 0,3 |
| | 476 / Anfang | 0,1 | 0,0 | 0,0 | 0,0 | 0,0 | 0,0 |
| | 479 / Ende | 12,0 | 0,0 | 0,0 | 0,0 | 0,0 | 0,0 |
| CO11(60) | 83 / Anfang | -3,3 | 0,1 | 9,2 | 0,0 | 11,3 | -0,1 |
| | 96 / Anfang | -4,7 | 0,0 | -9,7 | 0,0 | -3,0 | -0,1 |
| | 96 / Ende | 7,6 | 0,5 | -8,1 | 0,0 | 3,0 | 0,2 |
| | 187 / Ende | -0,3 | 0,0 | 8,3 | 0,0 | -11,3 | -0,1 |
| | 476 / Anfang | -0,1 | 0,0 | 0,2 | 0,0 | 0,0 | 0,0 |
| | 479 / Ende | 5,0 | 0,0 | 0,1 | 0,0 | 0,0 | 0,0 |
| CO11(61) | 83 / Anfang | -11,3 | 0,0 | 5,5 | 0,0 | 6,7 | 0,0 |
| | 96 / Anfang | -8,1 | 0,0 | -1,6 | 0,0 | -8,1 | 0,1 |
| | 96 / Ende | 8,1 | 0,0 | -9,4 | 0,0 | 8,2 | -0,1 |
| | 187 / Ende | 21,0 | 0,0 | 5,2 | 0,0 | -6,7 | 0,1 |
| | 476 / Anfang | -5,6 | 0,0 | 0,1 | 0,0 | 0,0 | 0,0 |
| | 479 / Ende | -5,9 | 0,0 | 0,2 | 0,0 | 0,0 | 0,0 |
| CO11(36) | 83 / Anfang | 2,7 | 0,1 | 11,0 | 0,0 | 13,6 | -0,1 |
| | 96 / Anfang | -0,7 | 0,0 | -12,9 | 0,0 | -1,8 | -0,1 |
| | 96 / Ende | 3,1 | 0,4 | -7,9 | 0,0 | 1,8 | 0,3 |
| | 187 / Ende | -9,6 | 0,0 | 9,6 | 0,0 | -13,6 | -0,1 |
| | 476 / Anfang | 2,3 | 0,0 | 0,1 | 0,0 | 0,0 | 0,0 |
| | 479 / Ende | 6,4 | 0,0 | 0,1 | 0,0 | 0,0 | 0,0 |
| CO11(38) | 83 / Anfang | 4,3 | 0,1 | 30,3 | 0,0 | 37,2 | -0,2 |
| | 96 / Anfang | 7,3 | -0,1 | -29,8 | 0,0 | -20,1 | 0,0 |
| | 96 / Ende | -0,9 | 0,5 | -27,8 | 0,0 | 20,1 | 0,3 |
| | 187 / Ende | -13,6 | 0,0 | 26,9 | 0,0 | -37,2 | 0,0 |
| | 476 / Anfang | 0,3 | 0,0 | 0,2 | 0,0 | 0,0 | 0,0 |
| | 479 / Ende | 11,0 | 0,0 | 0,1 | 0,0 | 0,0 | 0,0 |
| CO11(39) | 83 / Anfang | -11,5 | 0,0 | 1,6 | 0,0 | 2,0 | 0,0 |
| | 96 / Anfang | -7,3 | 0,0 | 1,5 | 0,0 | -5,3 | 0,1 |
| | 96 / Ende | 7,1 | -0,1 | -5,2 | 0,0 | 5,3 | -0,1 |
| | 187 / Ende | 21,2 | 0,0 | 1,8 | 0,0 | -2,0 | 0,1 |
| | 476 / Anfang | -5,5 | 0,0 | 0,1 | 0,0 | 0,0 | 0,0 |

| Name | Bauteil | N [kN] | Vy [kN] | Vz [kN] | Mx [kNm] | My [kNm] | Mz [kNm] |
|---|---|---|---|---|---|---|---|
| | 479 / Ende | -6,0 | 0,0 | 0,1 | 0,0 | 0,0 | 0,0 |
| CO11(40) | 83 / Anfang | 3,0 | 0,1 | 14,9 | 0,0 | 18,4 | -0,1 |
| | 96 / Anfang | -1,3 | 0,0 | -16,1 | 0,0 | -4,7 | -0,1 |
| | 96 / Ende | 3,9 | 0,4 | -12,1 | 0,0 | 4,7 | 0,2 |
| | 187 / Ende | -10,1 | 0,0 | 13,0 | 0,0 | -18,4 | 0,0 |
| | 476 / Anfang | 2,3 | 0,0 | 0,2 | 0,0 | 0,0 | 0,0 |
| | 479 / Ende | 6,6 | 0,0 | 0,1 | 0,0 | 0,0 | 0,0 |
| CO11(42) | 83 / Anfang | -3,6 | 0,1 | 22,7 | 0,0 | 27,9 | -0,1 |
| | 96 / Anfang | -4,2 | 0,0 | -20,4 | 0,0 | -18,2 | 0,0 |
| | 96 / Ende | 7,6 | 0,4 | -22,9 | 0,0 | 18,3 | 0,2 |
| | 187 / Ende | 0,2 | 0,0 | 20,2 | 0,0 | -28,0 | 0,0 |
| | 476 / Anfang | -0,4 | 0,0 | 0,2 | 0,0 | 0,0 | 0,0 |
| | 479 / Ende | 4,9 | 0,0 | 0,1 | 0,0 | 0,0 | 0,0 |
| CO11(43) | 83 / Anfang | 2,2 | 0,1 | 24,8 | 0,0 | 30,2 | -0,1 |
| | 96 / Anfang | 9,8 | -0,1 | -24,3 | 0,0 | -15,9 | 0,0 |
| | 96 / Ende | -4,4 | 0,2 | -23,1 | 0,0 | 15,9 | 0,0 |
| | 187 / Ende | -1,9 | 0,0 | 22,3 | 0,0 | -30,2 | 0,0 |
| | 476 / Anfang | -4,6 | 0,0 | 0,1 | 0,0 | 0,0 | 0,0 |
| | 479 / Ende | 4,4 | 0,0 | 0,1 | 0,0 | 0,0 | 0,0 |
| CO11(44) | 83 / Anfang | -8,9 | 0,0 | 1,6 | 0,0 | 2,0 | -0,1 |
| | 96 / Anfang | -4,5 | 0,0 | 1,4 | 0,0 | -5,0 | -0,1 |
| | 96 / Ende | 6,8 | 0,3 | -5,1 | 0,0 | 5,1 | 0,2 |
| | 187 / Ende | 9,0 | -0,1 | 1,8 | 0,0 | -2,0 | -0,1 |
| | 476 / Anfang | -2,0 | 0,0 | 0,1 | 0,0 | 0,0 | 0,0 |
| | 479 / Ende | 2,3 | 0,0 | 0,1 | 0,0 | 0,0 | 0,0 |
| CO11(46) | 83 / Anfang | 2,7 | 0,1 | 28,4 | 0,0 | 35,0 | -0,1 |
| | 96 / Anfang | -0,7 | -0,1 | -26,7 | 0,0 | -19,9 | 0,0 |
| | 96 / Ende | 3,8 | 0,3 | -26,9 | 0,0 | 20,0 | 0,1 |
| | 187 / Ende | -9,7 | 0,0 | 24,9 | 0,0 | -35,0 | 0,0 |
| | 476 / Anfang | 2,0 | 0,0 | 0,2 | 0,0 | 0,0 | 0,0 |
| | 479 / Ende | 6,5 | 0,0 | 0,1 | 0,0 | 0,0 | 0,0 |
| CO11(24) | 83 / Anfang | -8,6 | 0,0 | 1,6 | 0,0 | 2,0 | -0,1 |
| | 96 / Anfang | -4,7 | 0,1 | -0,5 | 0,0 | -2,0 | -0,1 |
| | 96 / Ende | 7,3 | 0,3 | -3,1 | 0,0 | 2,0 | 0,2 |
| | 187 / Ende | 7,7 | -0,1 | 1,8 | 0,0 | -2,0 | -0,1 |
| | 476 / Anfang | -1,5 | 0,0 | 0,1 | 0,0 | 0,0 | 0,0 |
| | 479 / Ende | 3,2 | 0,0 | 0,1 | 0,0 | 0,0 | 0,0 |
| CO11(25) | 83 / Anfang | 1,1 | 0,1 | 30,3 | 0,0 | 37,1 | -0,1 |
| | 96 / Anfang | 4,7 | -0,1 | -29,6 | 0,0 | -20,4 | 0,1 |
| | 96 / Ende | -1,2 | 0,0 | -27,9 | 0,0 | 20,4 | -0,1 |
| | 187 / Ende | 0,1 | 0,0 | 26,9 | 0,0 | -37,1 | 0,1 |
| | 476 / Anfang | -3,3 | 0,0 | 0,1 | 0,0 | 0,0 | 0,0 |
| | 479 / Ende | 1,9 | 0,0 | 0,1 | 0,0 | 0,0 | 0,0 |
| CO11(26) | 83 / Anfang | 4,0 | 0,1 | 30,3 | 0,0 | 37,2 | -0,2 |
| | 96 / Anfang | 7,9 | 0,0 | -29,8 | 0,0 | -20,1 | -0,1 |
| | 96 / Ende | -1,6 | 0,4 | -27,8 | 0,0 | 20,1 | 0,3 |
| | 187 / Ende | -13,6 | 0,0 | 26,9 | 0,0 | -37,2 | -0,1 |
| | 476 / Anfang | 0,6 | 0,0 | 0,2 | 0,0 | 0,0 | 0,0 |
| | 479 / Ende | 11,2 | 0,0 | 0,1 | 0,0 | 0,0 | 0,0 |
| CO11(27) | 83 / Anfang | 1,6 | 0,1 | 23,5 | 0,0 | 28,8 | 0,0 |
| | 96 / Anfang | 3,7 | -0,1 | -22,3 | 0,0 | -15,8 | 0,1 |
| | 96 / Ende | -0,5 | 0,1 | -22,5 | 0,0 | 15,8 | -0,1 |
| | 187 / Ende | 0,6 | 0,0 | 20,9 | 0,0 | -28,8 | 0,1 |
| | 476 / Anfang | -3,8 | 0,0 | 0,1 | 0,0 | 0,0 | 0,0 |

| Name | Bauteil | N [kN] | Vy [kN] | Vz [kN] | Mx [kNm] | My [kNm] | Mz [kNm] |
|---|---|---|---|---|---|---|---|
| | 479 / Ende | 1,3 | 0,0 | 0,2 | 0,0 | 0,0 | 0,0 |
| CO11(28) | 83 / Anfang | 4,5 | 0,1 | 14,1 | 0,0 | 17,2 | -0,1 |
| | 96 / Anfang | 13,8 | 0,1 | -16,0 | 0,0 | -5,2 | -0,2 |
| | 96 / Ende | -6,1 | 0,5 | -11,3 | 0,0 | 5,2 | 0,5 |
| | 187 / Ende | -14,9 | 0,0 | 12,9 | 0,0 | -17,2 | -0,1 |
| | 476 / Anfang | -0,4 | 0,0 | 0,1 | 0,0 | 0,0 | 0,0 |
| | 479 / Ende | 13,4 | 0,0 | 0,1 | 0,0 | 0,0 | 0,0 |
| CO11(29) | 83 / Anfang | -10,9 | 0,0 | 12,2 | 0,0 | 15,0 | 0,0 |
| | 96 / Anfang | -8,9 | 0,0 | -8,8 | 0,0 | -12,7 | 0,1 |
| | 96 / Ende | 9,4 | 0,0 | -14,9 | 0,0 | 12,8 | -0,2 |
| | 187 / Ende | 20,5 | 0,0 | 11,2 | 0,0 | -15,0 | 0,1 |
| | 476 / Anfang | -5,8 | 0,0 | 0,1 | 0,0 | 0,0 | 0,0 |
| | 479 / Ende | -5,5 | 0,0 | 0,2 | 0,0 | 0,0 | 0,0 |
| CO11(31) | 83 / Anfang | 1,6 | 0,0 | 20,9 | 0,0 | 25,5 | 0,0 |
| | 96 / Anfang | 10,9 | 0,0 | -21,2 | 0,0 | -13,1 | 0,0 |
| | 96 / Ende | -5,8 | 0,1 | -18,9 | 0,0 | 13,1 | 0,0 |
| | 187 / Ende | -1,6 | 0,0 | 18,9 | 0,0 | -25,5 | 0,0 |
| | 476 / Anfang | -4,3 | 0,0 | 0,1 | 0,0 | 0,0 | 0,0 |
| | 479 / Ende | 4,4 | 0,0 | 0,1 | 0,0 | 0,0 | 0,0 |
| CO11(34) | 83 / Anfang | -11,4 | 0,0 | 8,4 | 0,0 | 10,2 | 0,0 |
| | 96 / Anfang | -7,4 | 0,0 | -5,7 | 0,0 | -9,9 | 0,0 |
| | 96 / Ende | 7,6 | -0,1 | -10,7 | 0,0 | 9,9 | -0,1 |
| | 187 / Ende | 20,4 | 0,0 | 7,8 | 0,0 | -10,2 | 0,0 |
| | 476 / Anfang | -5,3 | 0,0 | 0,1 | 0,0 | 0,0 | 0,0 |
| | 479 / Ende | -5,4 | 0,0 | 0,1 | 0,0 | 0,0 | 0,0 |
| CO11(35) | 83 / Anfang | 4,6 | 0,1 | 14,1 | 0,0 | 17,2 | -0,1 |
| | 96 / Anfang | 13,3 | 0,1 | -14,1 | 0,0 | -8,3 | -0,1 |
| | 96 / Ende | -5,7 | 0,5 | -13,3 | 0,0 | 8,3 | 0,4 |
| | 187 / Ende | -13,8 | 0,0 | 13,0 | 0,0 | -17,2 | -0,1 |
| | 476 / Anfang | -1,0 | 0,0 | 0,1 | 0,0 | 0,0 | 0,0 |
| | 479 / Ende | 12,6 | 0,0 | 0,1 | 0,0 | 0,0 | 0,0 |
| CO11(11) | 83 / Anfang | 4,4 | 0,1 | 20,9 | 0,0 | 25,5 | -0,1 |
| | 96 / Anfang | 14,1 | 0,1 | -21,4 | 0,0 | -12,8 | -0,2 |
| | 96 / Ende | -6,2 | 0,5 | -18,7 | 0,0 | 12,8 | 0,4 |
| | 187 / Ende | -14,8 | 0,0 | 18,9 | 0,0 | -25,5 | -0,1 |
| | 476 / Anfang | -0,5 | 0,0 | 0,1 | 0,0 | 0,0 | 0,0 |
| | 479 / Ende | 13,4 | 0,0 | 0,1 | 0,0 | 0,0 | 0,0 |
| CO11(12) | 83 / Anfang | -10,8 | 0,0 | 5,5 | 0,0 | 6,7 | 0,0 |
| | 96 / Anfang | -9,2 | 0,0 | -3,5 | 0,0 | -5,1 | 0,1 |
| | 96 / Ende | 9,4 | 0,0 | -7,5 | 0,0 | 5,1 | -0,1 |
| | 187 / Ende | 20,3 | 0,0 | 5,2 | 0,0 | -6,7 | 0,1 |
| | 476 / Anfang | -5,7 | 0,0 | 0,1 | 0,0 | 0,0 | 0,0 |
| | 479 / Ende | -5,6 | 0,0 | 0,2 | 0,0 | 0,0 | 0,0 |
| CO11(18) | 83 / Anfang | 1,9 | 0,1 | 24,8 | 0,0 | 30,3 | -0,1 |
| | 96 / Anfang | 10,4 | 0,0 | -24,3 | 0,0 | -15,9 | 0,0 |
| | 96 / Ende | -5,1 | 0,1 | -23,1 | 0,0 | 15,9 | 0,0 |
| | 187 / Ende | -1,9 | 0,0 | 22,3 | 0,0 | -30,3 | 0,0 |
| | 476 / Anfang | -4,4 | 0,0 | 0,1 | 0,0 | 0,0 | 0,0 |
| | 479 / Ende | 4,5 | 0,0 | 0,1 | 0,0 | 0,0 | 0,0 |
| CO11(21) | 83 / Anfang | 1,4 | 0,1 | 30,3 | 0,0 | 37,1 | -0,1 |
| | 96 / Anfang | 4,0 | -0,1 | -29,6 | 0,0 | -20,4 | 0,1 |
| | 96 / Ende | -0,5 | 0,1 | -27,9 | 0,0 | 20,4 | -0,1 |
| | 187 / Ende | 0,1 | 0,0 | 26,9 | 0,0 | -37,1 | 0,1 |
| | 476 / Anfang | -3,6 | 0,0 | 0,1 | 0,0 | 0,0 | 0,0 |

| Name | Bauteil | N [kN] | Vy [kN] | Vz [kN] | Mx [kNm] | My [kNm] | Mz [kNm] |
|---|---|---|---|---|---|---|---|
| | 479 / Ende | 1,8 | 0,0 | 0,1 | 0,0 | 0,0 | 0,0 |
| CO11(3) | 83 / Anfang | -8,2 | 0,0 | 12,2 | 0,0 | 15,0 | -0,1 |
| | 96 / Anfang | -6,0 | 0,0 | -8,9 | 0,0 | -12,5 | 0,0 |
| | 96 / Ende | 9,1 | 0,4 | -14,7 | 0,0 | 12,5 | 0,2 |
| | 187 / Ende | 7,9 | -0,1 | 11,2 | 0,0 | -15,0 | -0,1 |
| | 476 / Anfang | -2,2 | 0,0 | 0,1 | 0,0 | 0,0 | 0,0 |
| | 479 / Ende | 3,0 | 0,0 | 0,1 | 0,0 | 0,0 | 0,0 |

## Fehlende Lasten

| Name | X [kN] | Y [kN] | Z [kN] | Mx [kNm] | My [kNm] | Mz [kNm] |
|---|---|---|---|---|---|---|
| CO11(47) | 0,0 | 0,0 | 0,0 | 0,0 | -0,2 | -0,5 |
| CO11(48) | 0,0 | 0,0 | 0,1 | -0,1 | 0,2 | 0,5 |
| CO11(49) | 0,0 | 0,0 | 0,0 | 0,0 | 0,0 | -0,1 |
| CO11(50) | 0,0 | 0,0 | 0,0 | 0,0 | -0,1 | -0,3 |
| CO11(51) | 0,0 | 0,0 | 0,0 | 0,0 | -0,2 | -0,5 |
| CO11(52) | 0,0 | 0,0 | 0,0 | -0,1 | 0,2 | 0,5 |
| CO11(53) | 0,0 | 0,0 | 0,0 | 0,0 | -0,2 | -0,4 |
| CO11(54) | 0,0 | 0,0 | 0,0 | 0,0 | 0,1 | 0,2 |
| CO11(55) | 0,0 | 0,0 | 0,0 | 0,0 | 0,0 | 0,1 |
| CO11(56) | 0,0 | 0,0 | 0,1 | -0,1 | 0,2 | 0,5 |
| CO11(57) | 0,0 | 0,0 | 0,0 | 0,0 | 0,1 | 0,3 |
| CO11(58) | 0,0 | 0,0 | 0,0 | 0,0 | 0,0 | -0,1 |
| CO9(59) | -1,0 | -1,7 | 0,0 | -0,1 | 0,2 | 0,5 |
| CO11(60) | 0,0 | 0,0 | 0,0 | 0,0 | 0,1 | 0,2 |
| CO11(61) | 0,0 | 0,0 | 0,0 | 0,0 | -0,2 | -0,5 |
| CO11(36) | 0,0 | 0,0 | 0,0 | 0,0 | 0,2 | 0,3 |
| CO11(38) | 0,0 | 0,0 | 0,1 | -0,1 | 0,2 | 0,5 |
| CO11(39) | 0,0 | 0,0 | 0,0 | 0,0 | -0,2 | -0,5 |
| CO11(40) | 0,0 | 0,0 | 0,0 | 0,0 | 0,2 | 0,4 |
| CO11(42) | 0,0 | 0,0 | 0,0 | 0,0 | 0,1 | 0,2 |
| CO11(43) | 0,0 | 0,0 | 0,0 | -0,1 | 0,0 | 0,0 |
| CO11(44) | 0,0 | 0,0 | 0,0 | 0,0 | 0,0 | 0,0 |
| CO11(46) | 0,0 | 0,0 | 0,0 | 0,0 | 0,1 | 0,3 |
| CO11(24) | 0,0 | 0,0 | 0,0 | 0,0 | 0,0 | 0,1 |
| CO11(25) | 0,0 | 0,0 | 0,0 | 0,0 | 0,0 | -0,1 |
| CO11(26) | 0,0 | 0,0 | 0,1 | -0,1 | 0,2 | 0,5 |
| CO11(27) | 0,0 | 0,0 | 0,0 | 0,0 | 0,0 | -0,1 |
| CO11(28) | 0,0 | 0,0 | 0,1 | -0,1 | 0,2 | 0,5 |
| CO11(29) | 0,0 | 0,0 | 0,0 | 0,0 | -0,2 | -0,5 |
| CO11(31) | 0,0 | 0,0 | 0,0 | -0,1 | 0,0 | 0,0 |
| CO11(34) | 0,0 | 0,0 | 0,0 | 0,0 | -0,2 | -0,4 |
| CO11(35) | 0,0 | 0,0 | 0,0 | -0,1 | 0,2 | 0,5 |
| CO11(11) | 0,0 | 0,0 | 0,1 | -0,1 | 0,2 | 0,5 |
| CO11(12) | 0,0 | 0,0 | 0,0 | 0,0 | -0,2 | -0,4 |
| CO11(18) | 0,0 | 0,0 | 0,0 | -0,1 | 0,0 | 0,0 |
| CO11(21) | 0,0 | 0,0 | 0,0 | 0,0 | 0,0 | -0,1 |
| CO11(3) | 0,0 | 0,0 | 0,0 | 0,0 | 0,0 | 0,0 |

# Nachweis

## Übersicht

| Name | Wert | Nachweisstatus |
|---|---|---|
| Berechnung | 100,0% | OK |
| Platten | 2,5 < 5,0% | OK |
| Lokale Verformung | 0,0 < 3% | OK |
| Schrauben | 80,5 < 100% | OK |
| Schweißnähte | 99,6 < 100% | OK |
| Beulen | Nicht berechnet | |

## Platten

| Name | Material | $t_p$ [mm] | Lasten | $\sigma_{Ed}$ [MPa] | $\varepsilon_{Pl}$ [%] | $\sigma_{c,Ed}$ [MPa] | Status |
|---|---|---|---|---|---|---|---|
| 83-bfl 1 | Baustahl S 355 | 8,5 | CO11(25) | 145,9 | 0,0 | 0,0 | OK |
| 83-tfl 1 | Baustahl S 355 | 8,5 | CO11(25) | 347,4 | 0,0 | 0,0 | OK |
| 83-w 1 | Baustahl S 355 | 5,6 | CO11(25) | 359,9 | 2,3 | 0,0 | OK |
| 96-bfl 1 | Baustahl S 355 | 8,5 | CO11(26) | 273,5 | 0,0 | 0,0 | OK |
| 96-tfl 1 | Baustahl S 355 | 8,5 | CO11(25) | 352,3 | 0,0 | 0,0 | OK |
| 96-w 1 | Baustahl S 355 | 5,6 | CO11(21) | 147,6 | 0,0 | 0,0 | OK |
| 187-bfl 1 | Baustahl S 355 | 8,5 | CO11(21) | 150,6 | 0,0 | 0,0 | OK |
| 187-tfl 1 | Baustahl S 355 | 8,5 | CO11(26) | 349,4 | 0,0 | 0,0 | OK |
| 187-w 1 | Baustahl S 355 | 5,6 | CO11(25) | 360,3 | 2,5 | 0,0 | OK |
| 476 | Baustahl S 355 | 2,9 | CO11(46) | 163,3 | 0,0 | 0,0 | OK |
| 479 | Baustahl S 355 | 2,9 | CO11(26) | 141,5 | 0,0 | 0,0 | OK |
| Verschobene Stirnplatte1a | S 355 | 15,0 | CO11(26) | 273,5 | 0,0 | 112,4 | OK |
| Verschobene Stirnplatte1b | S 355 | 15,0 | CO11(25) | 355,2 | 0,1 | 114,4 | OK |
| STEIFF | S 355 | 10,0 | CO11(21) | 235,1 | 0,0 | 0,0 | OK |
| Verschobene Stirnplatte2a | S 355 | 15,0 | CO11(26) | 279,1 | 0,0 | 112,2 | OK |
| Verschobene Stirnplatte2b | S 355 | 15,0 | CO11(25) | 355,3 | 0,1 | 111,1 | OK |
| STEIFF | S 355 | 10,0 | CO11(26) | 239,0 | 0,0 | 0,0 | OK |
| Verbindungsblech1a | S 355 | 10,0 | CO11(25) | 272,9 | 0,0 | 4,7 | OK |
| Verbindungsblech1b | S 355 | 10,0 | CO11(26) | 106,2 | 0,0 | 7,4 | OK |
| Verbindungsblech2a | S 355 | 10,0 | CO11(25) | 269,9 | 0,0 | 2,9 | OK |
| Verbindungsblech2b | S 355 | 10,0 | CO11(46) | 55,0 | 0,0 | 7,2 | OK |

### Bemessungsdaten

| Material | $f_y$ [MPa] | $\varepsilon_{lim}$ [%] |
|---|---|---|
| Baustahl S 355 | 355,0 | 5,0 |
| S 355 | 355,0 | 5,0 |

### Erläuterung von Symbolen

| | |
|---|---|
| $t_p$ | Plattendicke |
| $\sigma_{Ed}$ | Vergleichsspannung |
| $\varepsilon_{Pl}$ | Plastische Dehnung |
| $\sigma_{c,Ed}$ | Kontaktspannung |
| $f_y$ | Streckgrenze |
| $\varepsilon_{lim}$ | Grenzwert plastische Dehnung |

## Lokale Verformung

| Name | $d_0$ [mm] | Lasten | $\delta$ [mm] | $\delta_{lim}$ [mm] | $\delta/d_0$ [%] | Nachweisstatus |
|---|---|---|---|---|---|---|
| 476 | 76 | CO11(3) | 0 | 2 | 0,0 | OK |
| 479 | 76 | CO11(3) | 0 | 2 | 0,0 | OK |

**Erläuterung von Symbolen**

| | |
|---|---|
| $d_0$ | Querschnittsgröße |
| $\delta$ | Lokale Verformung im Querschnitt |
| $\delta_{lim}$ | Zulässige Verformung |

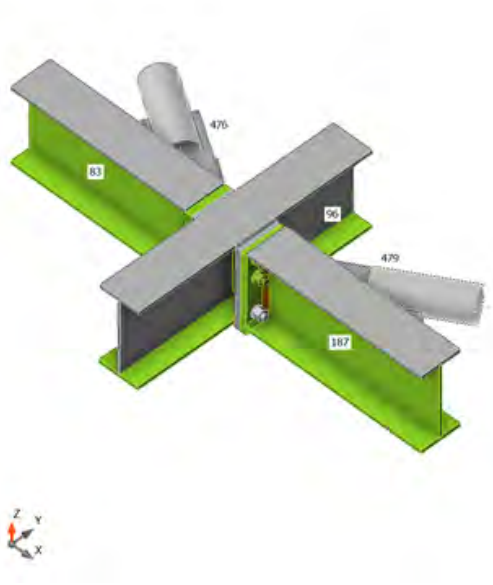


*Gesamt, CO11(25)*

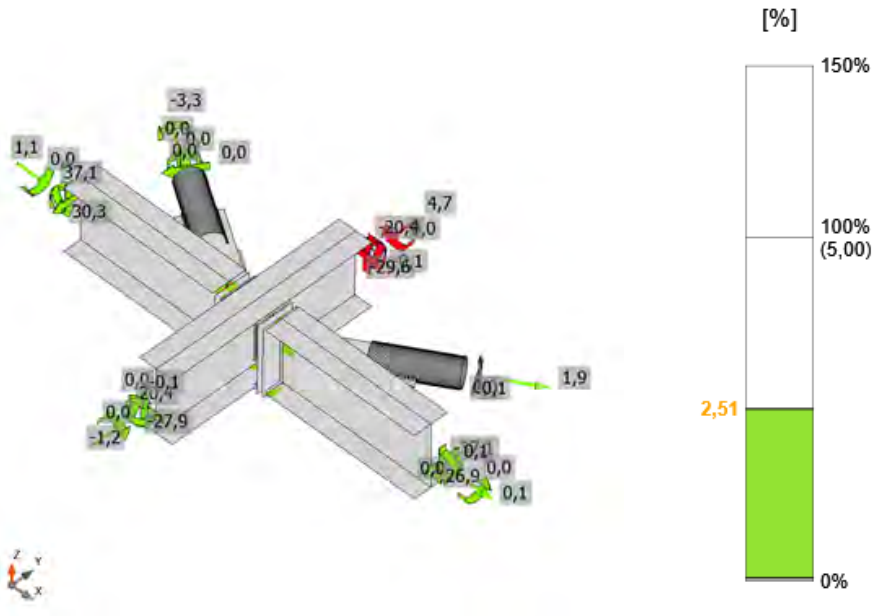


*Dehnung, CO11(25)*

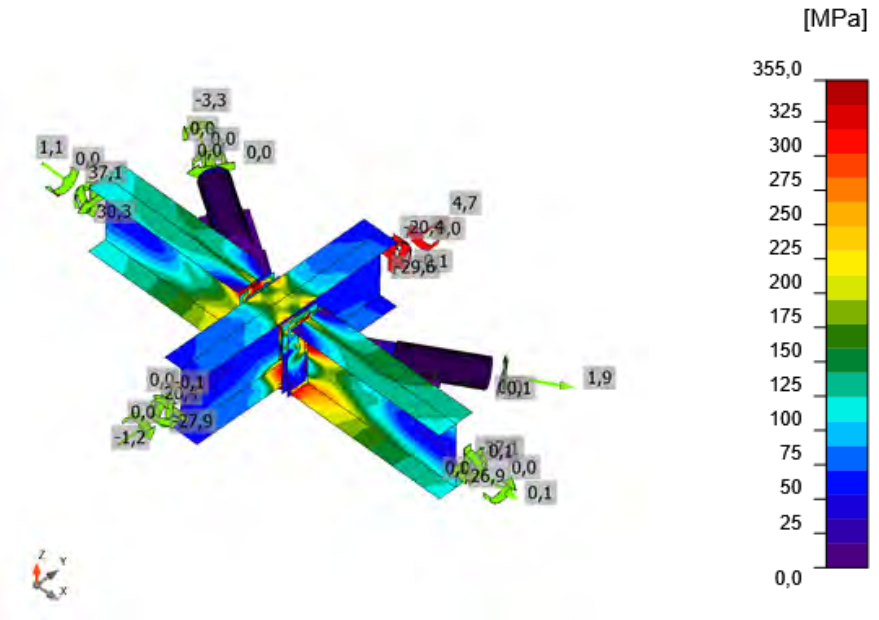


*Vergleichsspannung, CO11(25)*

## Schrauben

| Form | Position | Klasse | Lasten | $F_{t,Ed}$ [kN] | $F_{v,Ed}$ [kN] | $F_{b,Rd}$ [kN] | $Ut_t$ [%] | $Ut_s$ [%] | $Ut_{ts}$ [%] | Konstruktionsregeln | Status |
|---|---|---|---|---|---|---|---|---|---|---|---|
| 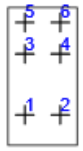 | B1 | M16 8.8 - 1 | CO11(25) | 7,1 | 3,2 | 167,7 | 7,8 | 5,4 | 11,0 | OK | OK |
| | B2 | M16 8.8 - 1 | CO11(25) | 7,0 | 2,7 | 145,0 | 7,8 | 4,5 | 10,1 | OK | OK |
| | B3 | M16 8.8 - 1 | CO11(25) | 66,4 | 4,9 | 125,4 | 73,4 | 8,1 | 60,6 | OK | OK |
| | B4 | M16 8.8 - 1 | CO11(25) | 69,3 | 4,9 | 125,4 | 76,6 | 8,1 | 62,8 | OK | OK |
| | B5 | M16 8.8 - 1 | CO11(26) | 72,7 | 6,1 | 66,7 | 80,4 | 10,1 | 67,5 | OK | OK |
| | B6 | M16 8.8 - 1 | CO11(25) | 72,5 | 6,0 | 71,7 | 80,2 | 9,9 | 67,2 | OK | OK |
| 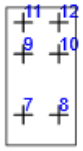 | B7 | M16 8.8 - 1 | CO11(25) | 6,7 | 3,8 | 171,6 | 7,4 | 6,3 | 11,6 | OK | OK |
| | B8 | M16 8.8 - 1 | CO11(25) | 6,5 | 3,7 | 140,2 | 7,2 | 6,1 | 11,2 | OK | OK |
| | B9 | M16 8.8 - 1 | CO11(25) | 65,6 | 5,3 | 125,4 | 72,5 | 8,8 | 60,6 | OK | OK |
| | B10 | M16 8.8 - 1 | CO11(25) | 68,4 | 5,6 | 125,4 | 75,6 | 9,3 | 63,3 | OK | OK |
| | B11 | M16 8.8 - 1 | CO11(21) | 72,8 | 6,1 | 70,1 | 80,5 | 10,1 | 67,6 | OK | OK |
| | B12 | M16 8.8 - 1 | CO11(25) | 72,6 | 6,6 | 72,4 | 80,3 | 10,9 | 68,2 | OK | OK |
| 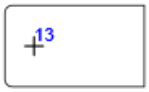 | B13 | M20 8.8 - 2 | CO11(48) | 3,6 | 13,6 | 96,0 | 2,6 | 14,4 | 16,3 | OK | OK |
| 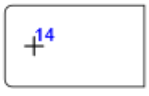 | B14 | M20 8.8 - 2 | CO11(47) | 3,1 | 5,8 | 96,0 | 2,2 | 6,2 | 7,7 | OK | OK |

**Bemessungsdaten**

| Klasse | $F_{t,Rd}$ [kN] | $B_{p,Rd}$ [kN] | $F_{v,Rd}$ [kN] |
|---|---|---|---|
| M16 8.8 - 1 | 90,4 | 281,2 | 60,3 |
| M20 8.8 - 2 | 141,1 | 234,7 | 94,1 |

**Erläuterung von Symbolen**

| | |
|---|---|
| $F_{t,Ed}$ | Zugkraft |
| $F_{v,Ed}$ | Resultierende der Schraubenscherkräfte Vy und Vz in Scherebenen |
| $F_{b,Rd}$ | Lochleibungstragfähigkeit der Platte nach EN 1993-1-8 Tab. 3.4 |
| $Ut_t$ | Ausnutzung unter Zug |
| $Ut_s$ | Ausnutzung unter Schub |
| $Ut_{ts}$ | Interaktion von Zug und Schub EN_1993-1-8 Tabelle 3.4 |
| $F_{t,Rd}$ | Zugtragfähigkeit der Schraube nach EN 1993-1-8 Tabelle 3.4 |
| $B_{p,Rd}$ | Durchstanztragfähigkeit nach EN 1993-1-8 Tabelle 3.4 |
| $F_{v,Rd}$ | Schertragfähigkeit der Schraube nach EN 1993-1-8 Tabelle 3.4 |

## Schweißnähte

| Position | Kante | $T_w$ [mm] | L [mm] | Lasten | $\sigma_{w,Ed}$ [MPa] | $\varepsilon_{Pl}$ [%] | $\sigma_{\perp}$ [MPa] | $\tau_{\perp}$ [MPa] | $\tau_{\parallel}$ [MPa] | Ut [%] | $Ut_c$ [%] | Konstruktionsregeln | Status |
|---|---|---|---|---|---|---|---|---|---|---|---|---|---|
| Verschobene Stirnplatte1a | 96-tfl 1 | ◢ 5,0 ◣ | 102 | CO11(26) | 427,0 | 0,1 | -206,3 | 210,2 | 49,0 | 98,0 | 77,2 | OK | OK |
| | | ◢ 5,0 ◣ | 102 | CO11(26) | 408,9 | 0,0 | -206,3 | -200,4 | -36,9 | 93,9 | 65,9 | OK | OK |
| Verschobene Stirnplatte1a | 96-bfl 1 | ◢ 5,0 ◣ | 102 | CO11(26) | 208,2 | 0,0 | 182,4 | 57,9 | -2,7 | 51,7 | 36,3 | OK | OK |
| | | ◢ 5,0 ◣ | 102 | CO11(38) | 68,5 | 0,0 | -20,9 | 22,9 | -29,9 | 15,7 | 13,0 | OK | OK |
| Verschobene Stirnplatte1b | 187-w 1 | ◢ 6,0 ◣ | 187 | CO11(25) | 433,7 | 3,9 | 218,0 | 213,3 | 37,0 | 99,6 | 86,0 | OK | OK |
| | | ◢ 6,0 ◣ | 187 | CO11(25) | 433,5 | 3,8 | 210,5 | -215,3 | -38,8 | 99,5 | 86,9 | OK | OK |
| Verschobene Stirnplatte1b | 187-tfl 1 | ◢ 6,0 ◣ | 99 | CO11(26) | 373,5 | 0,0 | -189,8 | -183,2 | 30,5 | 85,8 | 66,2 | OK | OK |
| | | ◢ 6,0 ◣ | 99 | CO11(26) | 332,1 | 0,0 | -160,1 | 166,4 | -23,3 | 76,2 | 58,4 | OK | OK |
| Verschobene Stirnplatte2a | 96-tfl 1 | ◢ 5,0 ◣ | 102 | CO11(25) | 427,0 | 0,1 | -203,6 | 209,6 | -54,8 | 98,0 | 79,0 | OK | OK |
| | | ◢ 5,0 ◣ | 102 | CO11(25) | 402,2 | 0,0 | -205,3 | -196,5 | 35,2 | 92,3 | 71,1 | OK | OK |
| 96-bfl 1 | STEIFF | ◢ 4,0 ◣ | 35 | CO11(25) | 260,9 | 0,0 | -0,5 | 1,3 | 150,6 | 59,9 | 39,5 | OK | OK |
| | | ◢ 4,0 ◣ | 35 | CO11(21) | 266,4 | 0,0 | 2,8 | -1,0 | -153,8 | 61,2 | 40,2 | OK | OK |
| 96-w 1 | STEIFF | ◢ 4,0 ◣ | 158 | CO11(25) | 364,0 | 0,0 | 171,0 | 172,6 | -67,9 | 83,6 | 57,6 | OK | OK |
| | | ◢ 4,0 ◣ | 158 | CO11(25) | 370,4 | 0,0 | 175,9 | -174,3 | 70,8 | 85,0 | 58,1 | OK | OK |
| 96-tfl 1 | STEIFF | ◢ 4,0 ◣ | 35 | CO11(25) | 187,4 | 0,0 | -50,2 | -46,0 | -93,5 | 43,0 | 35,1 | OK | OK |
| | | ◢ 4,0 ◣ | 35 | CO11(25) | 187,9 | 0,0 | -44,5 | 48,7 | 93,5 | 43,1 | 35,3 | OK | OK |
| Verschobene Stirnplatte1a | STEIFF | ◢ 4,0 ◣ | 181 | CO11(25) | 426,9 | 0,1 | 218,6 | 211,6 | -6,8 | 98,0 | 61,0 | OK | OK |
| | | ◢ 4,0 ◣ | 181 | CO11(25) | 426,8 | 0,0 | 205,9 | -215,1 | 18,6 | 98,0 | 61,8 | OK | OK |
| Verschobene Stirnplatte2a | 96-bfl 1 | ◢ 5,0 ◣ | 102 | CO11(25) | 227,3 | 0,0 | 200,8 | 61,4 | -3,4 | 56,9 | 36,1 | OK | OK |
| | | ◢ 5,0 ◣ | 102 | CO11(26) | 68,6 | 0,0 | -16,2 | 32,3 | 21,0 | 15,8 | 12,7 | OK | OK |
| Verschobene Stirnplatte2b | 83-w 1 | ◢ 6,0 ◣ | 187 | CO11(25) | 433,0 | 3,5 | 219,3 | 213,2 | -31,7 | 99,4 | 81,6 | OK | OK |

| Position | Kante | $T_w$ [mm] | L [mm] | Lasten | $\sigma_{w,Ed}$ [MPa] | $\varepsilon_{Pl}$ [%] | $\sigma_{\perp}$ [MPa] | $\tau_{\perp}$ [MPa] | $\tau_{\parallel}$ [MPa] | Ut [%] | $Ut_c$ [%] | Konstruktionsregeln | Status |
|---|---|---|---|---|---|---|---|---|---|---|---|---|---|
| | | ◢ 6,0 ◣ | 187 | CO11(25) | 432,9 | 3,5 | 209,5 | -215,9 | 34,9 | 99,4 | 81,3 | OK | OK |
| Verschobene Stirnplatte1b | Verbindungsblech1a | ◢ 4,0 ◣ | 48 | CO11(25) | 303,5 | 0,0 | 124,6 | 105,2 | 120,2 | 69,7 | 47,6 | OK | OK |
| | | ◢ 4,0 ◣ | 48 | CO11(26) | 167,4 | 0,0 | -107,5 | 69,5 | 25,7 | 38,4 | 25,1 | OK | OK |
| Verschobene Stirnplatte2b | 83-tfl 1 | ◢ 6,0 ◣ | 99 | CO11(25) | 367,4 | 0,0 | -186,4 | -180,7 | -27,5 | 84,3 | 65,2 | OK | OK |
| | | ◢ 6,0 ◣ | 99 | CO11(25) | 324,7 | 0,0 | -157,0 | 162,8 | 20,7 | 74,5 | 57,4 | OK | OK |
| Verschobene Stirnplatte2b | Verbindungsblech2a | ◢ 4,0 ◣ | 48 | CO11(21) | 142,2 | 0,0 | -86,1 | -56,4 | -32,9 | 32,6 | 21,3 | OK | OK |
| | | ◢ 4,0 ◣ | 48 | CO11(25) | 297,6 | 0,0 | 119,5 | -98,2 | -122,9 | 68,3 | 47,0 | OK | OK |
| 96-bfl 1 | STEIFF | ◢ 4,0 ◣ | 35 | CO11(25) | 258,6 | 0,0 | 2,9 | 2,5 | 149,3 | 59,4 | 39,0 | OK | OK |
| | | ◢ 4,0 ◣ | 35 | CO11(25) | 261,4 | 0,0 | -1,0 | 0,6 | -150,9 | 60,0 | 40,0 | OK | OK |
| 96-w 1 | STEIFF | ◢ 4,0 ◣ | 158 | CO11(25) | 368,2 | 0,0 | 174,0 | 174,5 | -68,1 | 84,5 | 57,6 | OK | OK |
| | | ◢ 4,0 ◣ | 159 | CO11(25) | 365,0 | 0,0 | 172,8 | -172,3 | 69,1 | 83,8 | 56,7 | OK | OK |
| 96-tfl 1 | STEIFF | ◢ 4,0 ◣ | 35 | CO11(25) | 181,3 | 0,0 | -45,0 | -46,1 | -90,3 | 41,6 | 34,6 | OK | OK |
| | | ◢ 4,0 ◣ | 35 | CO11(25) | 177,0 | 0,0 | -47,1 | 45,9 | 87,2 | 40,6 | 34,2 | OK | OK |
| Verschobene Stirnplatte2a | STEIFF | ◢ 4,0 ◣ | 181 | CO11(25) | 420,2 | 0,0 | 203,5 | 211,9 | -12,0 | 96,5 | 60,5 | OK | OK |
| | | ◢ 4,0 ◣ | 181 | CO11(25) | 426,9 | 0,0 | 218,1 | -211,5 | 13,4 | 98,0 | 62,6 | OK | OK |
| 187-w 1 | Verbindungsblech1a | ◢ 4,0 ◣ | 199 | CO11(26) | 225,0 | 0,0 | 64,2 | 74,7 | 99,6 | 51,7 | 31,5 | OK | OK |
| | | ◢ 4,0 ◣ | 199 | CO11(26) | 291,7 | 0,0 | 73,5 | -63,0 | -150,3 | 67,0 | 39,9 | OK | OK |
| Verbindungsblech1b | 479-arc 2 | ◢ 4,0 | 109 | CO11(48) | 55,4 | 0,0 | -1,7 | 1,1 | 31,9 | 12,7 | 9,0 | OK | OK |
| Verbindungsblech1b | 479-arc 5 | ◢ 4,0 | 109 | CO11(48) | 64,0 | 0,0 | 24,4 | -12,6 | -31,8 | 14,7 | 10,1 | OK | OK |
| Verbindungsblech1b | 479-arc 31 | ◢ 4,0 | 109 | CO11(26) | 62,9 | 0,0 | -25,0 | 15,5 | 29,5 | 14,4 | 9,7 | OK | OK |
| 83-w 1 | Verbindungsblech2a | ◢ 4,0 ◣ | 199 | CO11(25) | 275,6 | 0,0 | 73,1 | 59,2 | 141,6 | 63,3 | 38,1 | OK | OK |
| | | ◢ 4,0 ◣ | 199 | CO11(21) | 204,0 | 0,0 | 59,1 | -73,0 | -85,9 | 46,8 | 29,0 | OK | OK |
| Verbindungsblech2b | 476-arc 2 | ◢ 4,0 | 109 | CO11(46) | 48,7 | 0,0 | -20,1 | 11,3 | 23,0 | 11,2 | 7,8 | OK | OK |
| Verbindungsblech2b | 476-arc 5 | ◢ 4,0 | 109 | CO11(46) | 46,2 | 0,0 | 20,1 | -7,6 | 22,8 | 10,6 | 7,4 | OK | OK |

| Position | Kante | $T_w$ [mm] | L [mm] | Lasten | $\sigma_{w,Ed}$ [MPa] | $\varepsilon_{Pl}$ [%] | $\sigma_{\perp}$ [MPa] | $\tau_{\perp}$ [MPa] | $\tau_{\parallel}$ [MPa] | Ut [%] | $Ut_c$ [%] | Konstruktionsregeln | Status |
|---|---|---|---|---|---|---|---|---|---|---|---|---|---|
| Verbindungsblech2b | 476-arc 31 | ◢ 4,0 | 109 | CO11(40) | 27,9 | 0,0 | -10,9 | 9,5 | -11,4 | 6,4 | 5,8 | OK | OK |
| Verbindungsblech1b | 479 | ◢ 4,0 | 109 | CO11(26) | 90,3 | 0,0 | 36,9 | -16,1 | 44,8 | 20,7 | 11,9 | OK | OK |
| Verbindungsblech2b | 476 | ◢ 4,0 | 109 | CO11(51) | 25,2 | 0,0 | -4,4 | 1,6 | -14,2 | 5,8 | 5,7 | OK | OK |

**Bemessungsdaten**

| Material | $f_u$ [MPa] | $\beta_w$ [-] | $\sigma_{w,Rd}$ [MPa] | 0.9 σ [MPa] |
|---|---|---|---|---|
| S 355 | 490,0 | 0,90 | 435,6 | 352,8 |

**Erläuterung von Symbolen**

| | |
|---|---|
| $T_w$ | Nahtdicke a |
| L | Länge |
| $\sigma_{w,Ed}$ | Vergleichsspannung |
| $\varepsilon_{Pl}$ | Dehnung |
| $\sigma_{\perp}$ | Senkrechte Spannung |
| $\tau_{\perp}$ | Scherspannung senkrecht zur Schweißnahtachse |
| $\tau_{\parallel}$ | Scherspannung parallel zur Schweißnahtachse |
| Ut | Ausnutzung |
| $Ut_c$ | Schätzung der Schweißnahtkapazität |
| ◢ | Kehlnaht |
| $f_u$ | Grenzfestigkeit der Schweißnaht |
| $\beta_w$ | Korrelationsfaktor nach EN 1993-1-8 Tab. 4.1 |
| $\sigma_{w,Rd}$ | Tragfähigkeit der Schweißnaht |
| 0.9 σ | Senkrechter Spannungswiderstand - 0.9*fu / γM2 |

### Beulen

**Die Beulanalyse wurde nicht berechnet.**

## Normeinstellungen

| Position | Wert | Einheit | Bezug |
|---|---|---|---|
| Sicherheitsfaktor $\gamma_{M0}$ | 1,00 | - | EN 1993-1-1 – 6.1 |
| Sicherheitsfaktor $\gamma_{M1}$ | 1,00 | - | EN 1993-1-1 – 6.1 |
| Sicherheitsfaktor $\gamma_{M2}$ | 1,25 | - | EN 1993-1-1 – 6.1 |
| Sicherheitsfaktor $\gamma_{M3}$ | 1,25 | - | EN 1993-1-8 – Table 2.1 |
| Sicherheitsfaktor $\gamma_C$ | 1,50 | - | EN 1992-1-1 – 2.4.2.4 |
| Sicherheitsfaktor $\gamma_{Inst}$ | 1,20 | - | EN 1992-4 – Table 4.1 |
| Verbindungskoeffizient βj | 0,67 | - | EN 1993-1-8 – 6.2.5(7) |
| Wirksame Fläche - Einfluss der Netzgröße | 0,10 | - | |
| Reibungsbeiwert - Beton | 0,25 | - | EN 1993-1-8 |
| Reibungskoeffizient bei gleitfesten Verbindungen | 0,30 | - | EN 1993-1-8 – Table 3.7 |
| Plastische Dehnung - Grenzwert | 0,05 | - | EN 1993-1-5 |
| Konstruktionsregeln | Ja | | |
| Distance between bolts [d0] | 2,20 | - | EN 1993-1-8 – Table 3.3 |
| Distance between bolts and edge [d0] | 1,20 | - | EN 1993-1-8 – Table 3.3 |
| Nachweis der Tragfähigkeit bei Betonausbruch | Beide | | |
| Berechnetes αb für Lochleibungsnachweis anwenden. | Ja | | EN 1993-1-8 – Table 3.4 |
| Gerissener Beton | Ja | | EN 1992-4 |
| Überprüfen der lokalen Verformung | Ja | | |
| Lokale Verformung - Grenzwert | 0,03 | - | CIDECT DG 1, 3 – 1.1 |
| Geometrische Nichtlinearität (GMNA) | Ja | | Analyse mit großen Verformungen für Verbindungen mit Hohlprofilen |
| Ausgesteiftes System | Nein | | EN 1993-1-8 – 5.2.2.5 |

| | |
|---|---|
| **Projekt:** | **IdeaStatiCa-Stadion_Fazanerija_JK-6_BR - 286** |
| **Projektnummer:** | **Detail D12-O3** |
| **Autor:** | **mag. Igor Gorup dipl. ing.** |

## Projektdaten

| | |
|---|---|
| Projektname | IdeaStatiCa-Stadion_Fazanerija_JK-6_BR - 286 |
| Projektnummer | Detail D12-O3 |
| Autor | mag. Igor Gorup dipl. ing. |
| Beschreibung | |
| Datum | 18.06.2025 |
| Norm | EN |

## Material

| | |
|---|---|
| Stahl | Baustahl S 355, Baustahl S 235, S 355 |

# Projektposition 286

## Bemessung

| | |
|---|---|
| Name | 286 |
| Beschreibung | |
| Berechnung | Spannung, Dehnung/ Lasten im Gleichgewicht |

### Bauteile

**Geometrie**

| Name | Querschnitt | β – Rotation [°] | Y - Rotation [°] | α - Rotation [°] | Abstand ex [mm] | Abstand ey [mm] | Abstand ez [mm] |
|---|---|---|---|---|---|---|---|
| 114 | 530 - IPE180 | -90,0 | 0,0 | -180,0 | 0 | 0 | 0 |
| 127 | 12 - HEA200 | 0,0 | 90,0 | -90,0 | 0 | 0 | 0 |
| 128 | 530 - IPE180 | -90,0 | 0,0 | -180,0 | 0 | 0 | -10 |
| 33 | 24 - IPE240 | 0,0 | 0,0 | -180,0 | 0 | 0 | 20 |
| 146 | 24 - IPE240 | 0,0 | 0,0 | -180,0 | 0 | 0 | 20 |

**Auflager und Kräfte**

| Name | Auflager | Kräfte in | X [mm] |
|---|---|---|---|
| 114 / anfang | Mx-My-Mz | Schrauben | 161 |
| 127 / anfang | N-Vy-Vz-Mx-My-Mz | Position | 0 |
| 127 / ende | | Position | 0 |
| 128 / ende | | Position | 0 |
| 33 / anfang | | Position | 0 |
| 146 / ende | | Position | 0 |

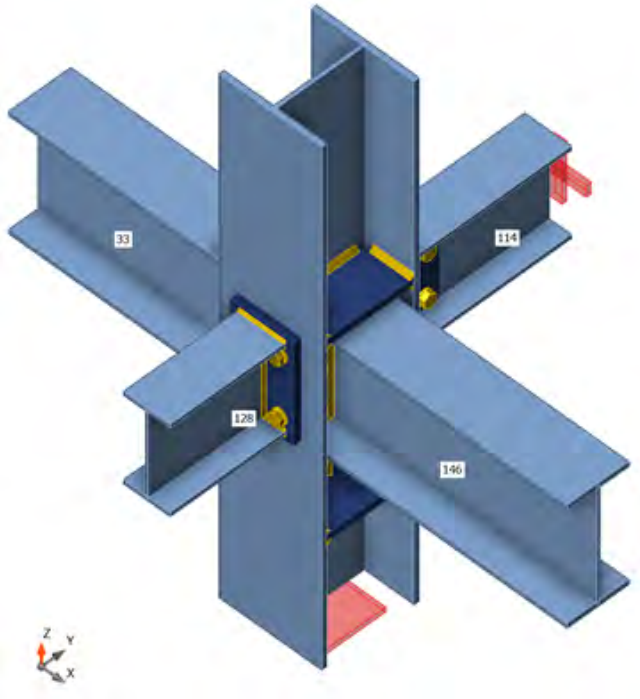

## Querschnitte

| Name | Material |
|---|---|
| 530 - IPE180 | S 355 |
| 12 - HEA200 | Baustahl S 355 |
| 24 - IPE240 | Baustahl S 355 |

## Schrauben

| Name | Durchmesser [mm] | $f_y$ [MPa] | $f_u$ [MPa] | Bruttofläche [$mm^2$] |
|---|---|---|---|---|
| M16 8.8 | 16 | 640,0 | 800,0 | 201 |
| M20 8.8 | 20 | 640,0 | 800,0 | 314 |

## Lasteinwirkungen (Kräfte im Gleichgewicht)

| Name | Bauteil | N [kN] | Vy [kN] | Vz [kN] | Mx [kNm] | My [kNm] | Mz [kNm] |
|---|---|---|---|---|---|---|---|
| CO9(41) | 114 / Anfang | 0,0 | 0,0 | 0,0 | 0,0 | 0,0 | 0,0 |
| | 127 / Anfang | -0,8 | -3,4 | -6,2 | 0,0 | -9,9 | 8,8 |
| | 127 / Ende | 0,7 | 1,9 | -2,6 | 0,0 | 9,9 | 7,1 |
| | 128 / Ende | 11,4 | 0,0 | 0,1 | 0,0 | 0,0 | 0,0 |
| | 33 / Anfang | 0,9 | 0,0 | 2,1 | 0,0 | 7,8 | 0,0 |
| | 146 / Ende | -1,5 | 0,0 | -2,2 | 0,0 | 8,0 | 0,0 |
| CO11(42) | 114 / Anfang | 0,8 | 0,0 | 48,2 | 0,0 | 0,0 | 0,0 |
| | 127 / Anfang | 241,0 | 0,9 | -8,2 | 0,0 | -16,3 | -3,7 |
| | 127 / Ende | -37,6 | 0,0 | 1,2 | 0,0 | -4,7 | 0,0 |
| | 128 / Ende | 0,3 | 0,0 | 40,1 | 0,0 | -21,0 | 0,0 |
| | 33 / Anfang | -0,9 | -0,3 | 56,5 | 0,0 | 88,3 | 0,5 |
| | 146 / Ende | 1,4 | -0,3 | 58,7 | 0,0 | -92,0 | -0,5 |
| CO11(43) | 114 / Anfang | -1,1 | 0,0 | 48,2 | 0,0 | 0,0 | 0,0 |
| | 127 / Anfang | 224,2 | 1,2 | 4,8 | 0,0 | 0,7 | -4,4 |
| | 127 / Ende | -21,0 | -0,1 | 5,6 | 0,0 | -21,8 | -0,5 |
| | 128 / Ende | -6,4 | 0,0 | 40,2 | 0,0 | -21,0 | 0,0 |
| | 33 / Anfang | -0,6 | 0,5 | 56,1 | 0,0 | 87,4 | -0,7 |
| | 146 / Ende | 0,9 | 0,5 | 58,6 | 0,0 | -92,3 | 0,8 |
| CO11(44) | 114 / Anfang | 0,5 | 0,0 | 48,2 | 0,0 | 0,0 | 0,0 |
| | 127 / Anfang | 240,8 | 0,0 | -7,9 | 0,0 | -15,1 | -0,4 |
| | 127 / Ende | -37,5 | 0,4 | 1,5 | 0,0 | -5,9 | 1,8 |
| | 128 / Ende | 4,7 | 0,0 | 40,1 | 0,0 | -21,0 | 0,0 |
| | 33 / Anfang | -0,2 | -0,3 | 57,1 | 0,0 | 90,8 | 0,5 |
| | 146 / Ende | 0,7 | -0,3 | 58,0 | 0,0 | -89,4 | -0,5 |
| CO11(45) | 114 / Anfang | 0,0 | 0,0 | 54,4 | 0,0 | 0,0 | 0,0 |
| | 127 / Anfang | 275,3 | 0,7 | -5,7 | 0,0 | -13,6 | -3,2 |
| | 127 / Ende | -47,5 | 0,1 | 2,4 | 0,0 | -9,5 | 0,5 |
| | 128 / Ende | 0,4 | 0,0 | 44,3 | 0,0 | -23,0 | 0,0 |
| | 33 / Anfang | -0,6 | -0,2 | 63,6 | 0,0 | 99,9 | 0,2 |
| | 146 / Ende | 1,1 | -0,2 | 65,7 | 0,0 | -102,6 | -0,2 |
| CO11(46) | 114 / Anfang | -1,0 | 0,0 | 48,2 | 0,0 | 0,0 | 0,0 |
| | 127 / Anfang | 225,8 | 0,0 | 2,9 | 0,0 | 2,7 | -0,5 |
| | 127 / Ende | -22,6 | 0,5 | 6,1 | 0,0 | -23,7 | 1,9 |
| | 128 / Ende | 0,8 | 0,0 | 40,2 | 0,0 | -21,0 | 0,0 |
| | 33 / Anfang | 0,2 | 0,2 | 57,0 | 0,1 | 90,6 | -0,3 |
| | 146 / Ende | 0,1 | 0,2 | 57,8 | -0,1 | -89,1 | 0,3 |
| CO11(47) | 114 / Anfang | 0,7 | 0,0 | 48,2 | 0,0 | 0,0 | 0,0 |
| | 127 / Anfang | 242,8 | 0,9 | -8,2 | 0,0 | -18,1 | -3,5 |
| | 127 / Ende | -39,4 | 0,0 | 0,7 | 0,0 | -2,9 | -0,1 |
| | 128 / Ende | 0,1 | 0,0 | 40,1 | 0,0 | -21,0 | 0,0 |
| | 33 / Anfang | -0,8 | -0,2 | 56,5 | 0,0 | 88,3 | 0,4 |
| | 146 / Ende | 1,3 | -0,2 | 58,6 | 0,0 | -91,9 | -0,4 |
| CO11(48) | 114 / Anfang | -1,1 | 0,0 | 54,3 | 0,0 | 0,0 | 0,0 |
| | 127 / Anfang | 264,2 | 0,9 | 2,3 | 0,0 | -1,8 | -3,7 |
| | 127 / Ende | -36,5 | 0,1 | 5,4 | 0,0 | -21,2 | 0,2 |
| | 128 / Ende | -3,6 | 0,0 | 44,3 | 0,0 | -23,0 | 0,0 |
| | 33 / Anfang | -0,4 | 0,3 | 63,4 | 0,0 | 99,3 | -0,5 |

| Name | Bauteil | N [kN] | Vy [kN] | Vz [kN] | Mx [kNm] | My [kNm] | Mz [kNm] |
|---|---|---|---|---|---|---|---|
| | 146 / Ende | 0,8 | 0,4 | 65,7 | 0,0 | -102,8 | 0,6 |
| CO11(49) | 114 / Anfang | -1,4 | 0,0 | 48,2 | 0,0 | 0,0 | 0,0 |
| | 127 / Anfang | 224,1 | 0,3 | 5,0 | 0,0 | 1,8 | -1,5 |
| | 127 / Ende | -20,9 | 0,3 | 5,9 | 0,0 | -22,8 | 1,0 |
| | 128 / Ende | -2,3 | 0,0 | 40,1 | 0,0 | -21,0 | 0,0 |
| | 33 / Anfang | 0,0 | 0,5 | 56,8 | 0,0 | 89,6 | -0,7 |
| | 146 / Ende | 0,2 | 0,5 | 58,0 | 0,0 | -90,1 | 0,7 |
| CO11(50) | 114 / Anfang | -1,1 | -0,1 | 54,3 | 0,0 | 0,0 | 0,0 |
| | 127 / Anfang | 260,0 | -0,4 | -1,5 | 0,0 | -5,8 | 0,8 |
| | 127 / Ende | -32,3 | 0,7 | 4,4 | 0,0 | -17,2 | 2,8 |
| | 128 / Ende | 4,3 | 0,0 | 44,3 | 0,0 | -23,0 | 0,0 |
| | 33 / Anfang | 0,5 | 0,0 | 64,4 | 0,0 | 102,9 | -0,1 |
| | 146 / Ende | -0,1 | 0,0 | 64,7 | 0,0 | -99,4 | 0,1 |
| CO11(38) | 114 / Anfang | -1,2 | 0,0 | 54,3 | 0,0 | 0,0 | 0,0 |
| | 127 / Anfang | 254,0 | 0,9 | 2,1 | 0,0 | -3,5 | -3,6 |
| | 127 / Ende | -26,3 | 0,0 | 5,0 | 0,0 | -19,5 | 0,1 |
| | 128 / Ende | -3,9 | 0,0 | 44,3 | 0,0 | -23,1 | 0,0 |
| | 33 / Anfang | -0,4 | 0,4 | 63,4 | 0,0 | 99,3 | -0,6 |
| | 146 / Ende | 0,8 | 0,4 | 65,7 | 0,0 | -102,8 | 0,6 |
| CO11(39) | 114 / Anfang | 1,5 | 0,0 | 25,1 | 0,0 | 0,0 | 0,0 |
| | 127 / Anfang | 137,2 | 1,0 | -7,2 | 0,0 | -12,3 | -3,3 |
| | 127 / Ende | -28,8 | -0,2 | 0,0 | 0,0 | 0,2 | -0,7 |
| | 128 / Ende | -0,4 | 0,0 | 22,6 | 0,0 | -12,1 | 0,0 |
| | 33 / Anfang | -0,9 | -0,2 | 29,5 | 0,0 | 45,4 | 0,3 |
| | 146 / Ende | 1,3 | -0,2 | 31,2 | 0,0 | -49,4 | -0,3 |
| CO11(23) | 114 / Anfang | -0,4 | 0,0 | 25,1 | 0,0 | 0,0 | 0,0 |
| | 127 / Anfang | 120,4 | 1,3 | 5,1 | 0,0 | 3,7 | -4,0 |
| | 127 / Ende | -12,2 | -0,3 | 4,1 | 0,0 | -15,8 | -1,2 |
| | 128 / Ende | -7,0 | 0,0 | 22,6 | 0,0 | -12,0 | 0,0 |
| | 33 / Anfang | -0,7 | 0,2 | 29,2 | 0,0 | 44,7 | -0,3 |
| | 146 / Ende | 0,8 | 0,2 | 31,2 | 0,0 | -49,8 | 0,4 |
| CO11(26) | 114 / Anfang | -0,9 | 0,0 | 54,3 | 0,0 | 0,0 | 0,0 |
| | 127 / Anfang | 262,0 | 0,5 | -1,9 | 0,0 | -9,0 | -2,3 |
| | 127 / Ende | -34,2 | 0,2 | 3,6 | 0,0 | -14,1 | 0,9 |
| | 128 / Ende | -0,2 | 0,0 | 44,3 | 0,0 | -23,1 | 0,0 |
| | 33 / Anfang | -0,1 | 0,1 | 63,7 | 0,0 | 100,4 | -0,2 |
| | 146 / Ende | 0,6 | 0,1 | 65,4 | 0,0 | -101,8 | 0,2 |
| CO11(27) | 114 / Anfang | -1,3 | 0,0 | 48,2 | 0,0 | 0,0 | 0,0 |
| | 127 / Anfang | 222,3 | 0,3 | 5,3 | 0,0 | 4,0 | -1,4 |
| | 127 / Ende | -19,1 | 0,3 | 6,5 | 0,0 | -25,0 | 1,2 |
| | 128 / Ende | -2,0 | 0,0 | 40,1 | 0,0 | -21,0 | 0,0 |
| | 33 / Anfang | 0,0 | 0,4 | 56,8 | 0,1 | 89,8 | -0,7 |
| | 146 / Ende | 0,2 | 0,4 | 58,0 | -0,1 | -90,0 | 0,7 |
| CO11(28) | 114 / Anfang | -0,3 | 0,0 | 54,3 | 0,0 | 0,0 | 0,0 |
| | 127 / Anfang | 263,2 | -0,2 | -5,4 | 0,0 | -12,0 | 0,0 |
| | 127 / Ende | -35,4 | 0,6 | 2,8 | 0,0 | -11,1 | 2,3 |
| | 128 / Ende | 4,7 | 0,0 | 44,3 | 0,0 | -23,0 | 0,0 |
| | 33 / Anfang | 0,1 | -0,2 | 64,3 | 0,0 | 102,4 | 0,3 |
| | 146 / Ende | 0,4 | -0,2 | 65,0 | 0,0 | -100,1 | -0,3 |

| Name | Bauteil | N [kN] | Vy [kN] | Vz [kN] | Mx [kNm] | My [kNm] | Mz [kNm] |
|---|---|---|---|---|---|---|---|
| CO11(29) | 114 / Anfang | 1,3 | 0,0 | 33,9 | 0,0 | 0,0 | 0,0 |
| | 127 / Anfang | 184,0 | 1,0 | -7,7 | 0,0 | -13,9 | -3,5 |
| | 127 / Ende | -37,7 | -0,1 | 0,6 | 0,0 | -2,3 | -0,4 |
| | 128 / Ende | -0,1 | 0,0 | 30,5 | 0,0 | -16,3 | 0,0 |
| | 33 / Anfang | -0,9 | -0,2 | 40,0 | 0,0 | 62,0 | 0,4 |
| | 146 / Ende | 1,4 | -0,2 | 41,9 | 0,0 | -65,9 | -0,4 |
| CO11(30) | 114 / Anfang | 1,5 | 0,0 | 25,1 | 0,0 | 0,0 | 0,0 |
| | 127 / Anfang | 149,2 | 1,0 | -7,2 | 0,0 | -12,7 | -3,3 |
| | 127 / Ende | -40,8 | -0,2 | -0,2 | 0,0 | 0,6 | -0,7 |
| | 128 / Ende | -0,4 | 0,0 | 22,6 | 0,0 | -12,1 | 0,0 |
| | 33 / Anfang | -0,9 | -0,2 | 29,5 | 0,0 | 45,4 | 0,3 |
| | 146 / Ende | 1,3 | -0,2 | 31,2 | 0,0 | -49,4 | -0,3 |
| CO11(15) | 114 / Anfang | -0,3 | 0,0 | 25,1 | 0,0 | 0,0 | 0,0 |
| | 127 / Anfang | 118,6 | 1,3 | 5,4 | 0,0 | 5,9 | -4,0 |
| | 127 / Ende | -10,4 | -0,3 | 4,7 | 0,0 | -18,0 | -1,1 |
| | 128 / Ende | -6,9 | 0,0 | 22,6 | 0,0 | -12,0 | 0,0 |
| | 33 / Anfang | -0,7 | 0,2 | 29,2 | 0,0 | 44,7 | -0,3 |
| | 146 / Ende | 0,8 | 0,2 | 31,2 | 0,0 | -49,8 | 0,3 |
| CO11(17) | 114 / Anfang | -0,6 | 0,0 | 25,1 | 0,0 | 0,0 | 0,0 |
| | 127 / Anfang | 118,5 | 0,3 | 5,7 | 0,0 | 7,0 | -1,1 |
| | 127 / Ende | -10,3 | 0,1 | 5,0 | 0,0 | -19,1 | 0,5 |
| | 128 / Ende | -2,7 | 0,0 | 22,6 | 0,0 | -12,0 | 0,0 |
| | 33 / Anfang | -0,1 | 0,2 | 29,9 | 0,0 | 46,9 | -0,3 |
| | 146 / Ende | 0,2 | 0,2 | 30,6 | 0,0 | -47,5 | 0,3 |
| CO11(18) | 114 / Anfang | 1,4 | 0,0 | 25,1 | 0,0 | 0,0 | 0,0 |
| | 127 / Anfang | 139,0 | 1,0 | -7,3 | 0,0 | -14,1 | -3,2 |
| | 127 / Ende | -30,6 | -0,2 | -0,5 | 0,0 | 2,1 | -0,7 |
| | 128 / Ende | -0,6 | 0,0 | 22,6 | 0,0 | -12,1 | 0,0 |
| | 33 / Anfang | -0,9 | -0,1 | 29,5 | 0,0 | 45,5 | 0,2 |
| | 146 / Ende | 1,3 | -0,1 | 31,2 | 0,0 | -49,3 | -0,2 |
| CO11(19) | 114 / Anfang | -0,6 | 0,0 | 25,1 | 0,0 | 0,0 | 0,0 |
| | 127 / Anfang | 130,5 | 0,3 | 5,7 | 0,0 | 6,6 | -1,1 |
| | 127 / Ende | -22,3 | 0,1 | 4,8 | 0,0 | -18,6 | 0,5 |
| | 128 / Ende | -2,7 | 0,0 | 22,6 | 0,0 | -12,0 | 0,0 |
| | 33 / Anfang | -0,1 | 0,2 | 29,9 | 0,0 | 46,9 | -0,3 |
| | 146 / Ende | 0,2 | 0,2 | 30,6 | 0,0 | -47,6 | 0,3 |
| CO11(21) | 114 / Anfang | -1,0 | 0,0 | 48,2 | 0,0 | 0,0 | 0,0 |
| | 127 / Anfang | 234,4 | 1,2 | 5,0 | 0,0 | 2,5 | -4,4 |
| | 127 / Ende | -31,2 | -0,1 | 6,0 | 0,0 | -23,5 | -0,5 |
| | 128 / Ende | -6,2 | 0,0 | 40,1 | 0,0 | -21,0 | 0,0 |
| | 33 / Anfang | -0,6 | 0,4 | 56,1 | 0,0 | 87,4 | -0,7 |
| | 146 / Ende | 0,9 | 0,5 | 58,6 | 0,0 | -92,3 | 0,7 |
| CO11(2) | 114 / Anfang | -1,5 | 0,0 | 54,3 | 0,0 | 0,0 | 0,0 |
| | 127 / Anfang | 253,8 | 0,0 | 2,4 | 0,0 | -2,5 | -0,7 |
| | 127 / Ende | -26,2 | 0,4 | 5,3 | 0,0 | -20,6 | 1,7 |
| | 128 / Ende | 0,2 | 0,0 | 44,3 | 0,0 | -23,0 | 0,0 |
| | 33 / Anfang | 0,2 | 0,4 | 64,0 | 0,0 | 101,6 | -0,6 |
| | 146 / Ende | 0,1 | 0,4 | 65,0 | 0,0 | -100,5 | 0,6 |
| CO11(3) | 114 / Anfang | -0,8 | 0,0 | 39,4 | 0,0 | 0,0 | 0,0 |

| Name | Bauteil | N [kN] | Vy [kN] | Vz [kN] | Mx [kNm] | My [kNm] | Mz [kNm] |
|---|---|---|---|---|---|---|---|
| | 127 / Anfang | 177,4 | 1,2 | 4,9 | 0,0 | 1,9 | -4,2 |
| | 127 / Ende | -12,1 | -0,2 | 4,9 | 0,0 | -18,6 | -0,8 |
| | 128 / Ende | -6,7 | 0,0 | 32,2 | 0,0 | -16,8 | 0,0 |
| | 33 / Anfang | -0,6 | 0,4 | 45,7 | 0,0 | 70,8 | -0,6 |
| | 146 / Ende | 0,8 | 0,4 | 48,0 | 0,0 | -75,8 | 0,6 |
| CO11(5) | 114 / Anfang | 0,0 | 0,0 | 54,4 | 0,0 | 0,0 | 0,0 |
| | 127 / Anfang | 263,3 | 0,7 | -5,7 | 0,0 | -13,1 | -3,2 |
| | 127 / Ende | -35,5 | 0,1 | 2,5 | 0,0 | -9,9 | 0,5 |
| | 128 / Ende | 0,3 | 0,0 | 44,3 | 0,0 | -23,0 | 0,0 |
| | 33 / Anfang | -0,6 | -0,2 | 63,6 | 0,0 | 99,9 | 0,3 |
| | 146 / Ende | 1,1 | -0,2 | 65,7 | 0,0 | -102,6 | -0,3 |
| CO11(9) | 114 / Anfang | -0,3 | 0,0 | 33,9 | 0,0 | 0,0 | 0,0 |
| | 127 / Anfang | 176,8 | -0,5 | -0,8 | 0,0 | -0,8 | 1,0 |
| | 127 / Ende | -30,6 | 0,6 | 4,0 | 0,0 | -15,5 | 2,4 |
| | 128 / Ende | 4,2 | 0,0 | 30,6 | 0,0 | -16,3 | 0,0 |
| | 33 / Anfang | 0,4 | 0,0 | 40,9 | 0,0 | 65,5 | 0,1 |
| | 146 / Ende | -0,1 | 0,0 | 40,8 | 0,0 | -62,1 | -0,1 |
| CO11(10) | 114 / Anfang | -0,8 | 0,0 | 48,2 | 0,0 | 0,0 | 0,0 |
| | 127 / Anfang | 233,8 | -0,4 | -1,2 | 0,0 | -2,9 | 0,9 |
| | 127 / Ende | -30,5 | 0,7 | 4,7 | 0,0 | -18,1 | 2,8 |
| | 128 / Ende | 4,5 | 0,0 | 40,2 | 0,0 | -21,0 | 0,0 |
| | 33 / Anfang | 0,5 | 0,0 | 57,4 | 0,0 | 91,8 | 0,0 |
| | 146 / Ende | -0,1 | 0,0 | 57,5 | 0,0 | -88,1 | 0,0 |
| CO11(11) | 114 / Anfang | -0,1 | 0,0 | 54,3 | 0,0 | 0,0 | 0,0 |
| | 127 / Anfang | 265,2 | 0,7 | -5,8 | 0,0 | -15,0 | -3,1 |
| | 127 / Ende | -37,3 | 0,1 | 2,1 | 0,0 | -8,0 | 0,4 |
| | 128 / Ende | 0,1 | 0,0 | 44,3 | 0,0 | -23,0 | 0,0 |
| | 33 / Anfang | -0,5 | -0,1 | 63,6 | 0,0 | 99,9 | 0,2 |
| | 146 / Ende | 1,0 | -0,1 | 65,7 | 0,0 | -102,6 | -0,2 |
| CO11(12) | 114 / Anfang | -0,3 | 0,0 | 25,1 | 0,0 | 0,0 | 0,0 |
| | 127 / Anfang | 130,6 | 1,3 | 5,4 | 0,0 | 5,5 | -4,0 |
| | 127 / Ende | -22,4 | -0,3 | 4,5 | 0,0 | -17,5 | -1,1 |
| | 128 / Ende | -6,8 | 0,0 | 22,6 | 0,0 | -12,0 | 0,0 |
| | 33 / Anfang | -0,7 | 0,2 | 29,2 | 0,0 | 44,7 | -0,3 |
| | 146 / Ende | 0,8 | 0,2 | 31,3 | 0,0 | -49,8 | 0,3 |

### Fehlende Lasten

| Name | X [kN] | Y [kN] | Z [kN] | Mx [kNm] | My [kNm] | Mz [kNm] |
|---|---|---|---|---|---|---|
| CO9(41) | -2,1 | -20,3 | 0,0 | 0,1 | 0,0 | 0,0 |
| CO11(42) | 1,5 | -7,5 | -0,1 | -7,8 | 0,0 | 0,0 |
| CO11(43) | 1,3 | 16,9 | 0,0 | -7,8 | 0,0 | 0,0 |
| CO11(44) | 0,9 | -10,9 | -0,1 | -7,7 | 0,0 | 0,0 |
| CO11(45) | 1,4 | -3,3 | -0,1 | -8,7 | 0,0 | 0,0 |
| CO11(46) | 0,8 | 8,8 | 0,0 | -7,8 | 0,0 | 0,0 |
| CO11(47) | 1,4 | -7,8 | -0,1 | -7,8 | 0,0 | 0,0 |
| CO11(48) | 1,4 | 11,7 | 0,0 | -8,8 | 0,0 | 0,0 |
| CO11(49) | 0,8 | 13,7 | 0,0 | -7,8 | 0,0 | 0,0 |
| CO11(50) | 0,7 | -0,3 | -0,1 | -8,7 | 0,0 | 0,0 |
| CO11(38) | 1,3 | 11,4 | 0,0 | -8,8 | 0,0 | 0,0 |
| CO11(39) | 1,3 | -7,9 | -0,1 | -4,0 | 0,0 | 0,0 |
| CO11(23) | 1,1 | 16,2 | 0,0 | -4,1 | 0,0 | 0,0 |
| CO11(26) | 1,2 | 2,6 | 0,0 | -8,8 | 0,0 | 0,0 |
| CO11(27) | 0,8 | 14,3 | 0,0 | -7,8 | 0,0 | 0,0 |
| CO11(28) | 0,9 | -6,5 | -0,1 | -8,7 | 0,0 | 0,0 |
| CO11(29) | 1,4 | -7,8 | -0,1 | -5,5 | 0,0 | 0,0 |
| CO11(30) | 1,3 | -8,2 | -0,1 | -4,0 | 0,0 | 0,0 |
| CO11(15) | 1,2 | 16,9 | 0,0 | -4,1 | 0,0 | 0,0 |
| CO11(17) | 0,5 | 13,6 | 0,0 | -4,1 | 0,0 | 0,0 |
| CO11(18) | 1,2 | -8,3 | -0,1 | -4,0 | 0,0 | 0,0 |
| CO11(19) | 0,5 | 13,4 | 0,0 | -4,1 | 0,0 | 0,0 |
| CO11(21) | 1,4 | 17,3 | 0,0 | -7,8 | 0,0 | 0,0 |
| CO11(2) | 0,8 | 8,2 | 0,0 | -8,8 | 0,0 | 0,0 |
| CO11(3) | 1,2 | 16,5 | 0,0 | -6,4 | 0,0 | 0,0 |
| CO11(5) | 1,4 | -3,1 | -0,1 | -8,7 | 0,0 | 0,0 |
| CO11(9) | 0,5 | -0,6 | 0,0 | -5,4 | 0,0 | 0,0 |
| CO11(10) | 0,7 | -0,3 | -0,1 | -7,7 | 0,0 | 0,0 |
| CO11(11) | 1,3 | -3,5 | 0,0 | -8,7 | 0,0 | 0,0 |
| CO11(12) | 1,2 | 16,6 | 0,0 | -4,1 | 0,0 | 0,0 |

## Nachweis

### Übersicht

| Name | Wert | Nachweisstatus |
|---|---|---|
| Berechnung | 100,0% | OK |
| Platten | 1,1 < 5,0% | OK |
| Schrauben | 91,2 < 100% | OK |
| Schweißnähte | 99,8 < 100% | OK |
| Beulen | Nicht berechnet | |

## Platten

| Name | Material | $t_p$ [mm] | Lasten | $\sigma_{Ed}$ [MPa] | $\varepsilon_{Pl}$ [%] | $\sigma_{c,Ed}$ [MPa] | Status |
|---|---|---|---|---|---|---|---|
| 114-bfl 1 | S 355 | 8,0 | CO11(48) | 92,1 | 0,0 | 0,0 | OK |
| 114-tfl 1 | S 355 | 8,0 | CO11(2) | 93,4 | 0,0 | 0,0 | OK |
| 114-w 1 | S 355 | 5,3 | CO11(11) | 284,2 | 0,0 | 19,0 | OK |
| 127-bfl 1 | Baustahl S 355 | 10,0 | CO11(2) | 355,4 | 0,2 | 111,6 | OK |
| 127-tfl 1 | Baustahl S 355 | 10,0 | CO11(50) | 204,4 | 0,0 | 0,0 | OK |
| 127-w 1 | Baustahl S 355 | 6,5 | CO11(50) | 355,1 | 0,0 | 111,3 | OK |
| 128-bfl 1 | S 355 | 8,0 | CO11(50) | 249,8 | 0,0 | 0,0 | OK |
| 128-tfl 1 | S 355 | 8,0 | CO11(50) | 293,7 | 0,0 | 0,0 | OK |
| 128-w 1 | S 355 | 5,3 | CO11(50) | 230,2 | 0,0 | 0,0 | OK |
| 33-bfl 1 | Baustahl S 355 | 9,8 | CO11(50) | 355,4 | 0,2 | 0,0 | OK |
| 33-tfl 1 | Baustahl S 355 | 9,8 | CO11(50) | 355,1 | 0,0 | 0,0 | OK |
| 33-w 1 | Baustahl S 355 | 6,2 | CO11(50) | 355,9 | 0,4 | 0,0 | OK |
| 146-bfl 1 | Baustahl S 355 | 9,8 | CO11(38) | 355,4 | 0,2 | 0,0 | OK |
| 146-tfl 1 | Baustahl S 355 | 9,8 | CO11(38) | 355,1 | 0,0 | 0,0 | OK |
| 146-w 1 | Baustahl S 355 | 6,2 | CO11(48) | 355,9 | 0,4 | 0,0 | OK |
| Fahnenblech1 | S 355 | 10,0 | CO11(28) | 311,0 | 0,0 | 37,3 | OK |
| Stirnblech1 | S 355 | 15,0 | CO11(50) | 338,5 | 0,0 | 227,7 | OK |
| Stirnblech2a | S 355 | 20,0 | CO11(5) | 355,3 | 0,2 | 104,7 | OK |
| Stirnblech2b | S 355 | 20,0 | CO11(28) | 355,3 | 0,2 | 103,2 | OK |
| Rippe1a | S 355 | 15,0 | CO9(41) | 56,6 | 0,0 | 0,0 | OK |
| Rippe1b | S 355 | 15,0 | CO9(41) | 56,3 | 0,0 | 0,0 | OK |
| Rippe1c | S 355 | 15,0 | CO11(45) | 145,4 | 0,0 | 0,0 | OK |
| Rippe1d | S 355 | 15,0 | CO11(50) | 149,3 | 0,0 | 0,0 | OK |
| Verstärkung1 | S 355 | 15,0 | CO11(48) | 357,4 | 1,1 | 0,0 | OK |
| Verstärkung2 | S 355 | 15,0 | CO11(50) | 357,3 | 1,1 | 0,0 | OK |

**Bemessungsdaten**

| Material | $f_y$ [MPa] | $\varepsilon_{lim}$ [%] |
|---|---|---|
| S 355 | 355,0 | 5,0 |
| Baustahl S 355 | 355,0 | 5,0 |

**Erläuterung von Symbolen**

| | |
|---|---|
| $t_p$ | Plattendicke |
| $\sigma_{Ed}$ | Vergleichsspannung |
| $\varepsilon_{Pl}$ | Plastische Dehnung |
| $\sigma_{c,Ed}$ | Kontaktspannung |
| $f_y$ | Streckgrenze |
| $\varepsilon_{lim}$ | Grenzwert plastische Dehnung |

*Gesamt, CO11(48)*

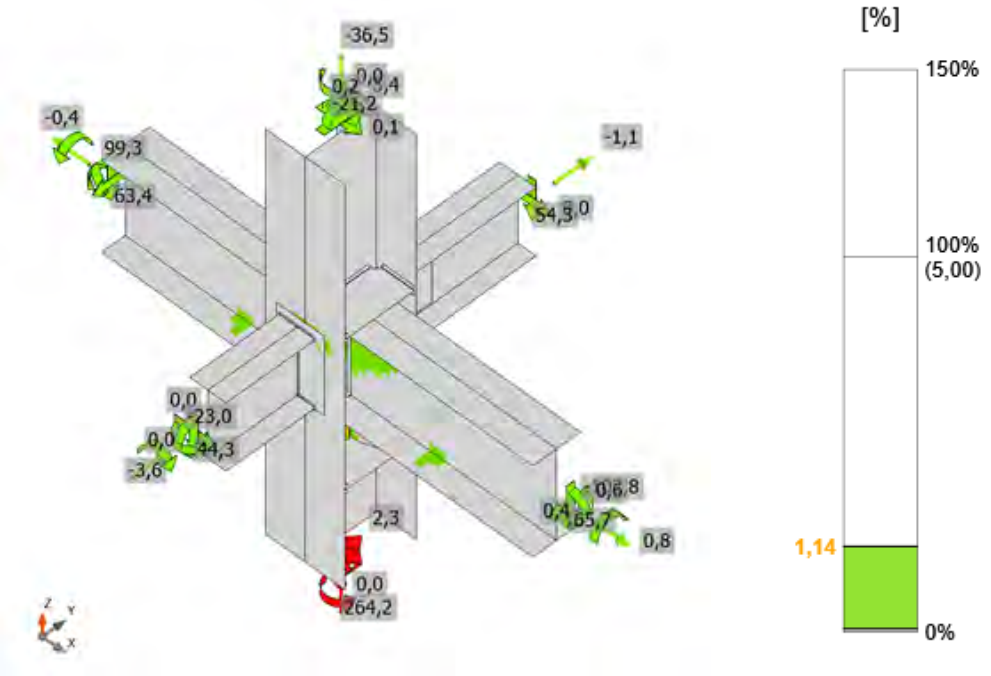


*Dehnung, CO11(48)*

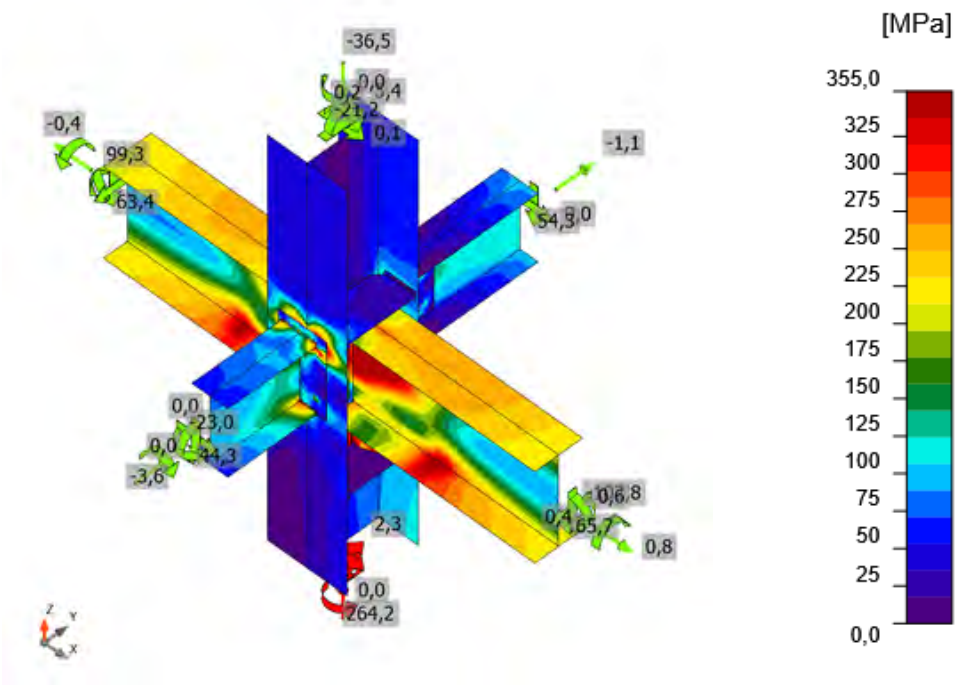


*Vergleichsspannung, CO11(48)*

## Schrauben

| Form | Position | Klasse | Lasten | $F_{t,Ed}$ [kN] | $F_{v,Ed}$ [kN] | $F_{b,Rd}$ [kN] | $Ut_t$ [%] | $Ut_s$ [%] | $Ut_{ts}$ [%] | Konstruktionsregeln | Status |
|---|---|---|---|---|---|---|---|---|---|---|---|
| 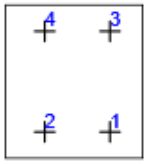 | B1 | M16 8.8 - 1 | CO11(11) | 3,4 | 24,2 | 56,7 | 3,8 | 42,6 | 42,8 | OK | OK |
| | B2 | M16 8.8 - 1 | CO11(11) | 2,0 | 13,7 | 67,7 | 2,2 | 22,8 | 24,4 | OK | OK |
| | B3 | M16 8.8 - 1 | CO11(11) | 2,5 | 24,2 | 61,6 | 2,8 | 40,1 | 42,1 | OK | OK |
| | B4 | M16 8.8 - 1 | CO11(11) | 7,0 | 13,7 | 46,2 | 7,7 | 29,6 | 28,2 | OK | OK |
| 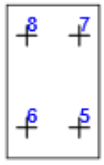 | B5 | M16 8.8 - 2 | CO11(28) | 5,6 | 11,6 | 156,8 | 6,1 | 19,2 | 23,6 | OK | OK |
| | B6 | M16 8.8 - 2 | CO11(11) | 5,4 | 11,4 | 156,8 | 6,0 | 18,9 | 23,2 | OK | OK |
| | B7 | M16 8.8 - 2 | CO11(28) | 72,6 | 10,7 | 156,8 | 80,3 | 17,7 | 75,0 | OK | OK |
| | B8 | M16 8.8 - 2 | CO11(50) | 72,8 | 11,0 | 156,8 | 80,5 | 18,3 | 75,8 | OK | OK |
| 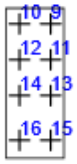 | B9 | M20 8.8 - 3 | CO11(38) | 128,7 | 1,7 | 122,6 | 91,2 | 2,7 | 67,0 | OK | OK |
| | B10 | M20 8.8 - 3 | CO11(5) | 128,6 | 3,0 | 127,4 | 91,2 | 4,5 | 68,3 | OK | OK |
| | B11 | M20 8.8 - 3 | CO11(50) | 113,2 | 7,9 | 122,6 | 80,2 | 12,7 | 65,7 | OK | OK |
| | B12 | M20 8.8 - 3 | CO11(5) | 113,2 | 9,3 | 122,6 | 80,2 | 14,8 | 67,1 | OK | OK |
| | B13 | M20 8.8 - 3 | CO11(50) | 23,5 | 10,1 | 127,4 | 16,7 | 14,4 | 22,6 | OK | OK |
| | B14 | M20 8.8 - 3 | CO11(50) | 23,3 | 11,0 | 127,4 | 16,5 | 16,1 | 23,5 | OK | OK |
| | B15 | M20 8.8 - 3 | CO11(48) | 0,0 | 12,9 | 127,4 | 0,0 | 18,8 | 13,7 | OK | OK |
| | B16 | M20 8.8 - 3 | CO11(45) | 0,0 | 13,4 | 127,4 | 0,0 | 20,0 | 14,2 | OK | OK |

**Bemessungsdaten**

| Klasse | $F_{t,Rd}$ [kN] | $B_{p,Rd}$ [kN] | $F_{v,Rd}$ [kN] |
|---|---|---|---|
| M16 8.8 - 1 | 90,4 | 99,4 | 60,3 |
| M16 8.8 - 2 | 90,4 | 187,5 | 60,3 |
| M20 8.8 - 3 | 141,1 | 469,4 | 94,1 |

**Erläuterung von Symbolen**

| | |
|---|---|
| $F_{t,Ed}$ | Zugkraft |
| $F_{v,Ed}$ | Resultierende der Schraubenscherkräfte Vy und Vz in Scherebenen |
| $F_{b,Rd}$ | Lochleibungstragfähigkeit der Platte nach EN 1993-1-8 Tab. 3.4 |
| $Ut_t$ | Ausnutzung unter Zug |
| $Ut_s$ | Ausnutzung unter Schub |
| $Ut_{ts}$ | Interaktion von Zug und Schub EN_1993-1-8 Tabelle 3.4 |
| $F_{t,Rd}$ | Zugtragfähigkeit der Schraube nach EN 1993-1-8 Tabelle 3.4 |
| $B_{p,Rd}$ | Durchstanztragfähigkeit nach EN 1993-1-8 Tabelle 3.4 |
| $F_{v,Rd}$ | Schertragfähigkeit der Schraube nach EN 1993-1-8 Tabelle 3.4 |

## Schweißnähte

| Position | Kante | $T_w$ [mm] | L [mm] | Lasten | $\sigma_{w,Ed}$ [MPa] | $\varepsilon_{Pl}$ [%] | $\sigma_{\perp}$ [MPa] | $\tau_{\perp}$ [MPa] | $\tau_{\parallel}$ [MPa] | Ut [%] | $Ut_c$ [%] | Konstruktionsregeln | Status |
|---|---|---|---|---|---|---|---|---|---|---|---|---|---|
| 127-tfl 1 | Fahnenblech1 | ◢ 6,0 ◣ | 139 | CO11(28) | 336,0 | 0,0 | -176,1 | -156,7 | 52,4 | 77,2 | 53,0 | OK | OK |
| | | ◢ 6,0 ◣ | 138 | CO11(28) | 361,0 | 0,0 | -153,7 | 159,1 | -101,3 | 82,9 | 64,5 | OK | OK |
| Stirnblech1 | 128-bfl 1 | ◢ 3,0 ◣ | 90 | CO11(50) | 427,3 | 0,3 | 191,0 | 170,4 | 140,3 | 98,1 | 76,4 | **Nicht OK!** | OK |
| | | ◢ 3,0 ◣ | 91 | CO11(50) | 390,1 | 0,0 | 110,6 | -160,0 | -145,0 | 89,6 | 65,2 | **Nicht OK!** | OK |
| Stirnblech1 | 128-tfl 1 | ◢ 3,0 ◣ | 90 | CO11(11) | 427,8 | 0,5 | -253,9 | -198,7 | -4,4 | 98,2 | 69,2 | **Nicht OK!** | OK |
| | | ◢ 3,0 ◣ | 90 | CO11(38) | 427,2 | 0,2 | -136,2 | 233,7 | 5,5 | 98,1 | 58,8 | **Nicht OK!** | OK |
| Stirnblech1 | 128-w 1 | ◢ 3,0 ◣ | 171 | CO11(26) | 427,0 | 0,1 | -182,0 | -181,8 | 129,1 | 98,0 | 59,0 | **Nicht OK!** | OK |
| | | ◢ 3,0 ◣ | 171 | CO11(11) | 427,0 | 0,1 | -182,6 | 183,6 | -126,3 | 98,0 | 59,7 | **Nicht OK!** | OK |
| Stirnblech2a | 146-bfl 1 | ◢ 6,0 ◣ | 120 | CO11(38) | 317,1 | 0,0 | 190,0 | 91,0 | -115,0 | 72,8 | 58,0 | OK | OK |
| | | ◢ 6,0 ◣ | 120 | CO11(38) | 184,2 | 0,0 | 1,0 | 22,9 | -103,8 | 42,3 | 33,0 | OK | OK |
| Stirnblech2a | 146-tfl 1 | ◢ 6,0 ◣ | 119 | CO11(38) | 235,2 | 0,0 | -122,4 | -86,9 | -76,9 | 54,0 | 44,1 | OK | OK |
| | | ◢ 6,0 ◣ | 119 | CO11(38) | 147,4 | 0,0 | -34,1 | 58,0 | -59,1 | 33,9 | 24,3 | OK | OK |
| Stirnblech2a | 146-w 1 | ◢ 6,0 ◣ | 229 | CO11(38) | 329,0 | 0,0 | 161,8 | 161,4 | 36,1 | 75,5 | 47,1 | OK | OK |
| | | ◢ 6,0 ◣ | 229 | CO11(28) | 328,4 | 0,0 | 161,1 | -162,7 | -28,6 | 75,4 | 48,6 | OK | OK |
| Stirnblech2b | 33-bfl 1 | ◢ 6,0 ◣ | 120 | CO11(2) | 321,3 | 0,0 | 191,3 | 93,7 | 115,9 | 73,8 | 59,4 | OK | OK |
| | | ◢ 6,0 ◣ | 120 | CO11(2) | 183,1 | 0,0 | 4,3 | 21,3 | 103,5 | 42,0 | 32,0 | OK | OK |
| Stirnblech2b | 33-tfl 1 | ◢ 6,0 ◣ | 119 | CO11(50) | 227,7 | 0,0 | -143,1 | -102,1 | 6,7 | 52,3 | 43,0 | OK | OK |
| | | ◢ 6,0 ◣ | 119 | CO11(2) | 140,1 | 0,0 | -33,4 | 56,0 | 55,0 | 32,2 | 23,0 | OK | OK |
| Stirnblech2b | 33-w 1 | ◢ 6,0 ◣ | 229 | CO11(50) | 368,8 | 0,0 | 184,2 | 180,8 | 36,8 | 84,7 | 50,2 | OK | OK |

| Position | Kante | $T_w$ [mm] | L [mm] | Lasten | $\sigma_{w,Ed}$ [MPa] | $\varepsilon_{Pl}$ [%] | $\sigma_{\perp}$ [MPa] | $\tau_{\perp}$ [MPa] | $\tau_{\parallel}$ [MPa] | Ut [%] | $Ut_c$ [%] | Konstruktionsregeln | Status |
|---|---|---|---|---|---|---|---|---|---|---|---|---|---|
| | | ◢ 6,0 ◣ | 229 | CO11(50) | 384,2 | 0,0 | 186,0 | -189,6 | -41,7 | 88,2 | 51,0 | OK | OK |
| 127-bfl 1 | Rippe1a | ◢ 6,0 ◣ | 79 | CO11(28) | 32,8 | 0,0 | 16,6 | 6,5 | 14,9 | 7,5 | 7,0 | OK | OK |
| | | ◢ 6,0 ◣ | 79 | CO11(28) | 24,5 | 0,0 | -1,4 | -8,7 | -11,2 | 5,6 | 5,6 | OK | OK |
| 127-w 1 | Rippe1a | ◢ 6,0 ◣ | 133 | CO9(41) | 51,9 | 0,0 | -14,4 | -19,4 | 21,2 | 11,9 | 10,6 | OK | OK |
| | | ◢ 6,0 ◣ | 134 | CO11(50) | 32,8 | 0,0 | 10,1 | -11,3 | -14,0 | 7,5 | 6,7 | OK | OK |
| 127-tfl 1 | Rippe1a | ◢ 6,0 ◣ | 79 | CO11(50) | 38,4 | 0,0 | 16,4 | 6,6 | -18,9 | 8,8 | 6,6 | OK | OK |
| | | ◢ 6,0 ◣ | 79 | CO11(21) | 27,3 | 0,0 | -2,6 | 4,9 | -14,9 | 6,3 | 6,3 | OK | OK |
| 127-bfl 1 | Rippe1b | ◢ 6,0 ◣ | 78 | CO11(47) | 27,1 | 0,0 | -1,2 | 8,2 | 13,3 | 6,2 | 6,2 | OK | OK |
| | | ◢ 6,0 ◣ | 78 | CO11(47) | 37,2 | 0,0 | 16,9 | -7,5 | -17,6 | 8,5 | 7,1 | OK | OK |
| 127-w 1 | Rippe1b | ◢ 6,0 ◣ | 134 | CO11(21) | 38,8 | 0,0 | 14,6 | 14,2 | 15,1 | 8,9 | 7,4 | OK | OK |
| | | ◢ 6,0 ◣ | 133 | CO9(41) | 48,0 | 0,0 | 21,8 | -16,6 | -18,3 | 11,0 | 10,1 | OK | OK |
| 127-tfl 1 | Rippe1b | ◢ 6,0 ◣ | 78 | CO11(21) | 32,7 | 0,0 | -4,0 | 5,9 | -17,8 | 7,5 | 6,7 | OK | OK |
| | | ◢ 6,0 ◣ | 78 | CO11(21) | 43,4 | 0,0 | 20,9 | -11,0 | 19,0 | 10,0 | 7,0 | OK | OK |
| 127-bfl 1 | Rippe1c | ◢ 6,0 ◣ | 79 | CO11(48) | 45,3 | 0,0 | -8,3 | -20,3 | 15,7 | 10,4 | 9,5 | OK | OK |
| | | ◢ 6,0 ◣ | 79 | CO11(45) | 142,4 | 0,0 | 69,9 | -59,1 | 40,5 | 32,7 | 21,6 | OK | OK |
| 127-w 1 | Rippe1c | ◢ 6,0 ◣ | 134 | CO11(48) | 55,7 | 0,0 | 20,4 | 15,5 | 25,6 | 12,8 | 9,6 | OK | OK |
| | | ◢ 6,0 ◣ | 134 | CO9(41) | 57,2 | 0,0 | 26,1 | -25,3 | -15,0 | 13,1 | 10,1 | OK | OK |
| 127-tfl 1 | Rippe1c | ◢ 6,0 ◣ | 79 | CO11(48) | 48,1 | 0,0 | 0,6 | 7,5 | -26,7 | 11,0 | 7,3 | OK | OK |
| | | ◢ 6,0 ◣ | 79 | CO11(48) | 63,9 | 0,0 | 34,2 | -27,4 | 14,8 | 14,7 | 8,4 | OK | OK |
| 127-bfl 1 | Rippe1d | ◢ 6,0 ◣ | 78 | CO11(50) | 149,7 | 0,0 | 68,7 | 58,5 | -49,6 | 34,4 | 23,0 | OK | OK |

| Position | Kante | $T_w$ [mm] | L [mm] | Lasten | $\sigma_{w,Ed}$ [MPa] | $\varepsilon_{Pl}$ [%] | $\sigma_{\perp}$ [MPa] | $\tau_{\perp}$ [MPa] | $\tau_{\parallel}$ [MPa] | Ut [%] | $Ut_c$ [%] | Konstruktionsregeln | Status |
|---|---|---|---|---|---|---|---|---|---|---|---|---|---|
| | | ◢ 6,0 ◣ | 78 | CO11(50) | 47,4 | 0,0 | -8,2 | 21,0 | -16,9 | 10,9 | 9,8 | OK | OK |
| 127-w 1 | Rippe1d | ◢ 6,0 ◣ | 134 | CO11(28) | 60,6 | 0,0 | 6,7 | 5,7 | 34,3 | 13,9 | 10,9 | OK | OK |
| | | ◢ 6,0 ◣ | 134 | CO11(50) | 61,2 | 0,0 | 15,4 | -16,3 | -30,1 | 14,1 | 10,2 | OK | OK |
| 127-tfl 1 | Rippe1d | ◢ 6,0 ◣ | 78 | CO11(48) | 48,4 | 0,0 | 14,3 | 10,5 | -24,6 | 11,1 | 7,6 | OK | OK |
| | | ◢ 6,0 ◣ | 78 | CO11(2) | 44,7 | 0,0 | 4,6 | -7,4 | 24,6 | 10,3 | 6,9 | OK | OK |
| Stirnblech2a | Verstärkung1 | ◢ 7,0 ◣ | 99 | CO11(48) | 434,5 | 4,4 | -214,1 | -214,4 | 41,3 | 99,8 | 99,8 | OK | OK |
| | | ◢ 7,0 ◣ | 99 | CO11(48) | 434,6 | 4,4 | -214,5 | 214,3 | -41,3 | 99,8 | 99,8 | OK | OK |
| 146-tfl 1 | Verstärkung1 | ◢ 7,0 ◣ | 219 | CO11(38) | 427,3 | 0,3 | -116,6 | -115,9 | -207,1 | 98,1 | 74,2 | OK | OK |
| | | ◢ 7,0 ◣ | 219 | CO11(5) | 427,3 | 0,2 | -116,1 | 116,0 | 207,1 | 98,1 | 73,8 | OK | OK |
| Stirnblech2b | Verstärkung2 | ◢ 7,0 ◣ | 99 | CO11(50) | 434,4 | 4,3 | -214,1 | -214,3 | 41,2 | 99,7 | 99,7 | OK | OK |
| | | ◢ 7,0 ◣ | 99 | CO11(50) | 434,4 | 4,3 | -214,3 | 214,2 | -41,4 | 99,7 | 99,7 | OK | OK |
| 33-tfl 1 | Verstärkung2 | ◢ 7,0 ◣ | 219 | CO11(50) | 427,3 | 0,2 | -115,1 | -116,0 | -207,3 | 98,1 | 74,1 | OK | OK |
| | | ◢ 7,0 ◣ | 219 | CO11(50) | 427,3 | 0,3 | -116,6 | 115,8 | 207,2 | 98,1 | 74,4 | OK | OK |

**Bemessungsdaten**

| Material | $f_u$ [MPa] | $\beta_w$ [-] | $\sigma_{w,Rd}$ [MPa] | 0.9 σ [MPa] |
|---|---|---|---|---|
| S 355 | 490,0 | 0,90 | 435,6 | 352,8 |

**Erläuterung von Symbolen**

| | |
|---|---|
| $T_w$ | Nahtdicke a |
| L | Länge |
| $\sigma_{w,Ed}$ | Vergleichsspannung |
| $\varepsilon_{Pl}$ | Dehnung |
| $\sigma_{\perp}$ | Senkrechte Spannung |
| $\tau_{\perp}$ | Scherspannung senkrecht zur Schweißnahtachse |
| $\tau_{\parallel}$ | Scherspannung parallel zur Schweißnahtachse |
| Ut | Ausnutzung |
| $Ut_c$ | Schätzung der Schweißnahtkapazität |
| ◢ | Kehlnaht |
| $f_u$ | Grenzfestigkeit der Schweißnaht |
| $\beta_w$ | Korrelationsfaktor nach EN 1993-1-8 Tab. 4.1 |
| $\sigma_{w,Rd}$ | Tragfähigkeit der Schweißnaht |
| 0.9 σ | Senkrechter Spannungswiderstand - 0.9*fu / γM2 |

### Beulen

**Die Beulanalyse wurde nicht berechnet.**

## Normeinstellungen

| Position | Wert | Einheit | Bezug |
|---|---|---|---|
| Sicherheitsfaktor $\gamma_{M0}$ | 1,00 | - | EN 1993-1-1 – 6.1 |
| Sicherheitsfaktor $\gamma_{M1}$ | 1,00 | - | EN 1993-1-1 – 6.1 |
| Sicherheitsfaktor $\gamma_{M2}$ | 1,25 | - | EN 1993-1-1 – 6.1 |
| Sicherheitsfaktor $\gamma_{M3}$ | 1,25 | - | EN 1993-1-8 – Table 2.1 |
| Sicherheitsfaktor $\gamma_C$ | 1,50 | - | EN 1992-1-1 – 2.4.2.4 |
| Sicherheitsfaktor $\gamma_{Inst}$ | 1,20 | - | EN 1992-4 – Table 4.1 |
| Verbindungskoeffizient βj | 0,67 | - | EN 1993-1-8 – 6.2.5(7) |
| Wirksame Fläche - Einfluss der Netzgröße | 0,10 | - | |
| Reibungsbeiwert - Beton | 0,25 | - | EN 1993-1-8 |
| Reibungskoeffizient bei gleitfesten Verbindungen | 0,30 | - | EN 1993-1-8 – Table 3.7 |
| Plastische Dehnung - Grenzwert | 0,05 | - | EN 1993-1-5 |
| Konstruktionsregeln | Ja | | |
| Distance between bolts [d0] | 2,20 | - | EN 1993-1-8 – Table 3.3 |
| Distance between bolts and edge [d0] | 1,20 | - | EN 1993-1-8 – Table 3.3 |
| Nachweis der Tragfähigkeit bei Betonausbruch | Beide | | |
| Berechnetes αb für Lochleibungsnachweis anwenden. | Ja | | EN 1993-1-8 – Table 3.4 |
| Gerissener Beton | Ja | | EN 1992-4 |
| Überprüfen der lokalen Verformung | Ja | | |
| Lokale Verformung - Grenzwert | 0,03 | - | CIDECT DG 1, 3 – 1.1 |
| Geometrische Nichtlinearität (GMNA) | Ja | | Analyse mit großen Verformungen für Verbindungen mit Hohlprofilen |
| Ausgesteiftes System | Nein | | EN 1993-1-8 – 5.2.2.5 |

| | |
|---|---|
| **Projekt:** | **IdeaStatiCa-Stadion_Fazanerija_JK-6_BR - 276** |
| **Projektnummer:** | **Detail D13-O3** |
| **Autor:** | **mag. Igor Gorup dipl. ing.** |

## Projektdaten

| | |
|---|---|
| Projektname | IdeaStatiCa-Stadion_Fazanerija_JK-6_BR - 276 |
| Projektnummer | Detail D13-O3 |
| Autor | mag. Igor Gorup dipl. ing. |
| Beschreibung | |
| Datum | 18.06.2025 |
| Norm | EN |

## Material

| | |
|---|---|
| Stahl | Baustahl S 355, Baustahl S 235, S 355 |

# Projektposition 276

## Bemessung

| | |
|---|---|
| Name | 276 |
| Beschreibung | |
| Berechnung | Spannung, Dehnung/ Lasten im Gleichgewicht |

### Bauteile

**Geometrie**

| Name | Querschnitt | β – Rotation [°] | Y - Rotation [°] | α - Rotation [°] | Abstand ex [mm] | Abstand ey [mm] | Abstand ez [mm] |
|---|---|---|---|---|---|---|---|
| 67 | 266 - HEB260 | -135,0 | 90,0 | 45,0 | 0 | 0 | 0 |
| 108 | 530 - IPE180 | -90,0 | 0,0 | -180,0 | 0 | 0 | -60 |
| 111 | 530 - IPE180 | -90,0 | 0,0 | -180,0 | 0 | 0 | -60 |
| 144 | 272 - IPE300 | 0,0 | 0,0 | -180,0 | 0 | 0 | 0 |
| 316 | 272 - IPE300 | 0,0 | 0,0 | -180,0 | 0 | 0 | 0 |

**Auflager und Kräfte**

| Name | Auflager | Kräfte in | X [mm] |
|---|---|---|---|
| 67 / anfang | N-Vy-Vz-Mx-My-Mz | Position | 0 |
| 67 / ende | | Position | 0 |
| 108 / ende | Mx-My-Mz | Schrauben | 200 |
| 111 / anfang | Mx-My-Mz | Schrauben | 200 |
| 144 / ende | | Position | 0 |
| 316 / anfang | | Position | 0 |

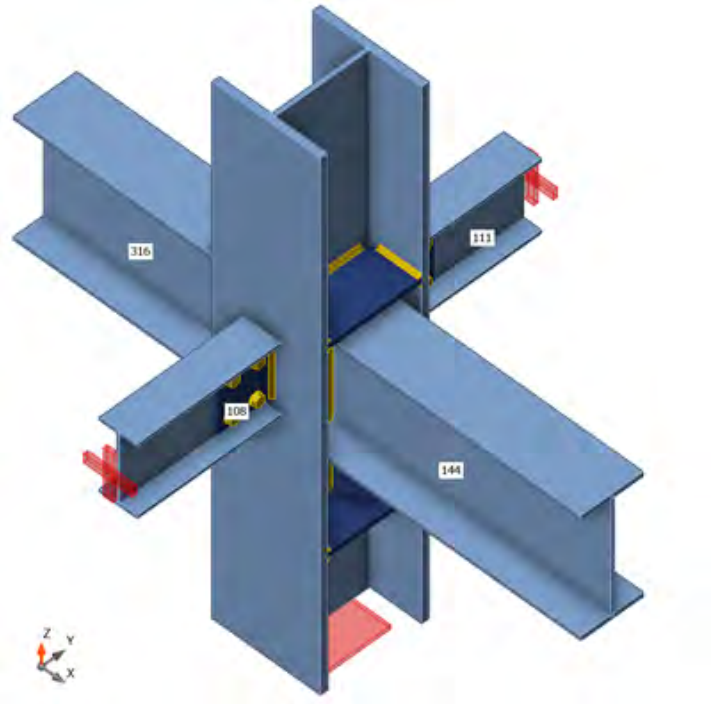

## Querschnitte

| Name | Material |
|---|---|
| 266 - HEB260 | Baustahl S 355 |
| 530 - IPE180 | S 355 |
| 272 - IPE300 | Baustahl S 355 |

## Schrauben

| Name | Durchmesser [mm] | $f_y$ [MPa] | $f_u$ [MPa] | Bruttofläche [$mm^2$] |
|---|---|---|---|---|
| M20 10.9 | 20 | 900,0 | 1000,0 | 314 |
| M16 8.8 | 16 | 640,0 | 800,0 | 201 |

## Lasteinwirkungen (Kräfte im Gleichgewicht)

| Name | Bauteil | N [kN] | Vy [kN] | Vz [kN] | Mx [kNm] | My [kNm] | Mz [kNm] |
|---|---|---|---|---|---|---|---|
| CO11(44) | 67 / Anfang | -144,7 | -1,8 | -22,1 | 0,0 | -17,9 | 4,6 |
| | 67 / Ende | 415,7 | 15,4 | 12,2 | 0,2 | 17,9 | 28,1 |
| | 108 / Ende | -0,6 | 0,0 | 48,2 | 0,0 | 0,0 | 0,0 |
| | 111 / Anfang | 7,7 | 0,0 | 35,2 | 0,0 | 0,0 | 0,0 |
| | 144 / Ende | 17,3 | -3,2 | 87,1 | 0,0 | -133,2 | -2,1 |
| | 316 / Anfang | -19,8 | -3,4 | 100,5 | 0,1 | 165,9 | 2,3 |
| CO11(45) | 67 / Anfang | 181,2 | -0,5 | 20,9 | 0,0 | 28,9 | 1,5 |
| | 67 / Ende | -37,3 | 7,5 | -11,2 | -0,1 | -28,9 | 14,6 |
| | 108 / Ende | 0,3 | 0,0 | 25,1 | 0,0 | 0,0 | 0,0 |
| | 111 / Anfang | 0,8 | 0,0 | 18,3 | 0,0 | 0,0 | 0,0 |
| | 144 / Ende | -0,1 | 2,8 | 46,8 | 0,0 | -71,6 | 1,4 |
| | 316 / Anfang | -3,1 | 2,8 | 53,6 | 0,0 | 87,7 | -1,5 |
| CO11(46) | 67 / Anfang | -72,5 | 3,8 | -19,0 | 0,0 | -20,7 | -9,0 |
| | 67 / Ende | 215,6 | -0,8 | 8,7 | 0,0 | 20,7 | 0,5 |
| | 108 / Ende | -1,2 | 0,0 | 25,1 | 0,0 | 0,0 | 0,0 |
| | 111 / Anfang | 6,0 | 0,0 | 18,3 | 0,0 | 0,0 | 0,0 |
| | 144 / Ende | 14,3 | -2,8 | 50,1 | 0,0 | -83,0 | -1,5 |
| | 316 / Anfang | -14,6 | -2,9 | 49,6 | 0,0 | 74,5 | 1,4 |
| CO11(47) | 67 / Anfang | 41,3 | -4,1 | -0,5 | 0,0 | 7,7 | 10,9 |
| | 67 / Ende | 263,1 | 17,5 | 0,5 | 0,0 | -7,7 | 32,1 |
| | 108 / Ende | 0,9 | 0,0 | 54,3 | 0,0 | 0,0 | 0,0 |
| | 111 / Anfang | 2,8 | 0,0 | 39,6 | 0,0 | 0,0 | 0,0 |
| | 144 / Ende | 4,8 | -0,2 | 96,7 | -0,1 | -146,7 | -0,2 |
| | 316 / Anfang | -9,2 | -0,2 | 113,7 | 0,1 | 189,7 | 0,3 |
| CO11(48) | 67 / Anfang | 29,3 | 3,2 | -19,4 | 0,0 | -20,7 | -7,5 |
| | 67 / Ende | 241,0 | 3,8 | 8,4 | 0,0 | 20,7 | 9,3 |
| | 108 / Ende | -0,6 | 0,0 | 48,2 | 0,0 | 0,0 | 0,0 |
| | 111 / Anfang | 6,7 | 0,0 | 35,1 | 0,0 | 0,0 | 0,0 |
| | 144 / Ende | 15,6 | -3,1 | 91,3 | 0,0 | -147,9 | -1,9 |
| | 316 / Anfang | -17,7 | -3,1 | 95,7 | 0,0 | 149,6 | 1,9 |
| CO11(49) | 67 / Anfang | 11,4 | -2,5 | 12,9 | 0,0 | 26,1 | 6,5 |
| | 67 / Ende | 259,7 | 14,9 | -7,1 | -0,1 | -26,2 | 27,8 |
| | 108 / Ende | 0,8 | 0,0 | 48,2 | 0,0 | 0,0 | 0,0 |
| | 111 / Anfang | 2,3 | 0,0 | 35,1 | 0,0 | 0,0 | 0,0 |
| | 144 / Ende | 3,1 | 1,7 | 86,9 | -0,1 | -132,6 | 0,9 |
| | 316 / Anfang | -7,9 | 1,7 | 100,8 | 0,1 | 166,9 | -0,9 |
| CO11(50) | 67 / Anfang | 379,9 | 2,3 | 15,7 | 0,0 | 19,0 | -5,1 |
| | 67 / Ende | -76,5 | 4,0 | -10,3 | 0,0 | -19,0 | 10,4 |
| | 108 / Ende | 1,2 | 0,0 | 54,3 | 0,0 | 0,0 | 0,0 |
| | 111 / Anfang | 1,1 | 0,0 | 39,6 | 0,0 | 0,0 | 0,0 |
| | 144 / Ende | 0,8 | 2,0 | 101,7 | 0,0 | -164,6 | 1,3 |
| | 316 / Anfang | -5,4 | 2,0 | 107,8 | 0,0 | 169,9 | -1,4 |
| CO9(51) | 67 / Anfang | -66,5 | -13,9 | -26,8 | 0,0 | -33,1 | 35,1 |
| | 67 / Ende | 68,6 | 17,0 | 18,6 | 0,0 | 33,1 | 27,7 |
| | 108 / Ende | -0,8 | 0,0 | 0,0 | 0,0 | 0,0 | 0,0 |
| | 111 / Anfang | 4,0 | 0,0 | 0,0 | 0,0 | 0,0 | 0,0 |
| | 144 / Ende | 9,0 | 0,0 | -8,2 | 0,0 | 29,1 | 0,0 |

| Name | Bauteil | N [kN] | Vy [kN] | Vz [kN] | Mx [kNm] | My [kNm] | Mz [kNm] |
|---|---|---|---|---|---|---|---|
| | 316 / Anfang | -9,2 | 0,0 | 10,2 | 0,0 | 33,8 | 0,0 |
| CO11(52) | 67 / Anfang | 456,4 | 3,3 | 24,4 | 0,0 | 28,0 | -8,0 |
| | 67 / Ende | -186,0 | 1,6 | -14,9 | 0,0 | -28,0 | 6,1 |
| | 108 / Ende | 1,1 | 0,0 | 48,2 | 0,0 | 0,0 | 0,0 |
| | 111 / Anfang | 0,5 | 0,0 | 35,1 | 0,0 | 0,0 | 0,0 |
| | 144 / Ende | -0,9 | 3,2 | 91,8 | 0,0 | -150,0 | 2,1 |
| | 316 / Anfang | -3,8 | 3,2 | 95,3 | 0,0 | 148,1 | -2,1 |
| CO11(31) | 67 / Anfang | 352,0 | 3,8 | 23,2 | 0,0 | 25,6 | -9,5 |
| | 67 / Ende | -208,9 | -2,7 | -14,2 | 0,0 | -25,6 | -2,6 |
| | 108 / Ende | 0,4 | 0,0 | 25,1 | 0,0 | 0,0 | 0,0 |
| | 111 / Anfang | -0,1 | 0,0 | 18,3 | 0,0 | 0,0 | 0,0 |
| | 144 / Ende | -1,8 | 2,9 | 50,6 | 0,0 | -84,9 | 1,6 |
| | 316 / Anfang | -1,2 | 2,9 | 49,2 | 0,0 | 72,8 | -1,5 |
| CO11(32) | 67 / Anfang | -99,6 | -1,8 | -22,0 | 0,0 | -18,7 | 4,6 |
| | 67 / Ende | 370,6 | 15,2 | 12,6 | 0,2 | 18,7 | 27,8 |
| | 108 / Ende | -0,6 | 0,0 | 48,2 | 0,0 | 0,0 | 0,0 |
| | 111 / Anfang | 7,8 | 0,0 | 35,2 | 0,0 | 0,0 | 0,0 |
| | 144 / Ende | 17,4 | -3,2 | 87,2 | 0,0 | -133,3 | -2,0 |
| | 316 / Anfang | -19,8 | -3,3 | 100,5 | 0,1 | 165,8 | 2,3 |
| CO11(37) | 67 / Anfang | 208,1 | -2,4 | 13,2 | 0,0 | 22,0 | 6,7 |
| | 67 / Ende | 96,0 | 14,9 | -7,0 | -0,1 | -22,0 | 28,3 |
| | 108 / Ende | 1,1 | 0,0 | 54,3 | 0,0 | 0,0 | 0,0 |
| | 111 / Anfang | 2,0 | 0,0 | 39,6 | 0,0 | 0,0 | 0,0 |
| | 144 / Ende | 2,5 | 1,8 | 97,8 | -0,1 | -150,5 | 1,0 |
| | 316 / Anfang | -7,5 | 1,8 | 112,5 | 0,1 | 185,5 | -1,1 |
| CO11(43) | 67 / Anfang | 189,9 | 3,9 | 23,1 | 0,0 | 30,0 | -9,7 |
| | 67 / Ende | -46,9 | -2,4 | -14,9 | 0,0 | -30,0 | -1,8 |
| | 108 / Ende | 0,3 | 0,0 | 25,1 | 0,0 | 0,0 | 0,0 |
| | 111 / Anfang | 0,2 | 0,0 | 18,3 | 0,0 | 0,0 | 0,0 |
| | 144 / Ende | -1,1 | 2,8 | 50,4 | 0,0 | -84,4 | 1,5 |
| | 316 / Anfang | -2,0 | 2,9 | 49,2 | 0,0 | 72,9 | -1,5 |
| CO11(23) | 67 / Anfang | -5,3 | -2,8 | -13,4 | 0,0 | -8,6 | 7,5 |
| | 67 / Ende | 309,4 | 16,7 | 7,9 | 0,2 | 8,6 | 30,8 |
| | 108 / Ende | 0,1 | 0,0 | 54,3 | 0,0 | 0,0 | 0,0 |
| | 111 / Anfang | 5,9 | 0,0 | 39,6 | 0,0 | 0,0 | 0,0 |
| | 144 / Ende | 12,5 | -2,0 | 97,3 | -0,1 | -148,7 | -1,4 |
| | 316 / Anfang | -15,9 | -2,1 | 112,9 | 0,1 | 187,0 | 1,6 |
| CO11(24) | 67 / Anfang | -236,6 | 4,1 | -19,3 | -0,1 | -16,5 | -9,6 |
| | 67 / Ende | 379,5 | -0,7 | 8,4 | 0,0 | 16,5 | 0,9 |
| | 108 / Ende | -1,3 | 0,0 | 25,1 | 0,0 | 0,0 | 0,0 |
| | 111 / Anfang | 6,3 | 0,0 | 18,3 | 0,0 | 0,0 | 0,0 |
| | 144 / Ende | 15,0 | -2,9 | 50,1 | 0,0 | -82,9 | -1,6 |
| | 316 / Anfang | -15,4 | -2,9 | 49,4 | 0,0 | 74,1 | 1,5 |
| CO11(26) | 67 / Anfang | 123,2 | 2,2 | -10,8 | 0,0 | -10,6 | -4,7 |
| | 67 / Ende | 180,2 | 5,5 | 3,8 | 0,0 | 10,6 | 12,4 |
| | 108 / Ende | 0,2 | 0,0 | 54,3 | 0,0 | 0,0 | 0,0 |
| | 111 / Anfang | 4,8 | 0,0 | 39,6 | 0,0 | 0,0 | 0,0 |
| | 144 / Ende | 10,8 | -1,9 | 101,4 | 0,0 | -163,2 | -1,2 |
| | 316 / Anfang | -13,8 | -1,9 | 108,1 | 0,0 | 170,9 | 1,2 |

| Name | Bauteil | N [kN] | Vy [kN] | Vz [kN] | Mx [kNm] | My [kNm] | Mz [kNm] |
|---|---|---|---|---|---|---|---|
| CO11(28) | 67 / Anfang | 86,4 | -4,0 | -0,4 | 0,0 | 6,9 | 10,9 |
| | 67 / Ende | 218,0 | 17,1 | 0,9 | 0,0 | -6,9 | 31,7 |
| | 108 / Ende | 0,9 | 0,0 | 54,3 | 0,0 | 0,0 | 0,0 |
| | 111 / Anfang | 2,9 | 0,0 | 39,6 | 0,0 | 0,0 | 0,0 |
| | 144 / Ende | 4,9 | -0,1 | 96,8 | -0,1 | -146,9 | -0,2 |
| | 316 / Anfang | -9,1 | -0,2 | 113,6 | 0,1 | 189,5 | 0,3 |
| CO11(30) | 67 / Anfang | -156,1 | -4,3 | -0,8 | 0,0 | 11,9 | 10,7 |
| | 67 / Ende | 427,4 | 17,5 | 0,6 | 0,1 | -11,9 | 31,6 |
| | 108 / Ende | 0,5 | 0,0 | 48,2 | 0,0 | 0,0 | 0,0 |
| | 111 / Anfang | 3,1 | 0,0 | 35,1 | 0,0 | 0,0 | 0,0 |
| | 144 / Ende | 5,4 | -0,2 | 85,9 | -0,1 | -128,8 | -0,3 |
| | 316 / Anfang | -9,5 | -0,3 | 102,1 | 0,1 | 171,1 | 0,4 |
| CO11(10) | 67 / Anfang | 371,2 | -2,1 | 13,5 | 0,0 | 17,8 | 6,4 |
| | 67 / Ende | -67,0 | 13,8 | -6,6 | -0,1 | -17,8 | 26,6 |
| | 108 / Ende | 1,2 | 0,0 | 54,3 | 0,0 | 0,0 | 0,0 |
| | 111 / Anfang | 1,7 | 0,0 | 39,6 | 0,0 | 0,0 | 0,0 |
| | 144 / Ende | 1,7 | 1,9 | 98,1 | -0,1 | -151,7 | 1,2 |
| | 316 / Anfang | -6,5 | 1,9 | 112,3 | 0,1 | 184,8 | -1,3 |
| CO11(13) | 67 / Anfang | -40,9 | 2,4 | -11,2 | 0,0 | -6,5 | -5,1 |
| | 67 / Ende | 344,1 | 5,8 | 3,5 | 0,1 | 6,5 | 12,9 |
| | 108 / Ende | 0,1 | 0,0 | 54,3 | 0,0 | 0,0 | 0,0 |
| | 111 / Anfang | 5,2 | 0,0 | 39,6 | 0,0 | 0,0 | 0,0 |
| | 144 / Ende | 11,5 | -2,0 | 101,3 | 0,0 | -162,9 | -1,3 |
| | 316 / Anfang | -14,7 | -2,0 | 107,9 | 0,0 | 170,7 | 1,4 |
| CO11(17) | 67 / Anfang | 262,1 | 2,4 | 15,6 | 0,0 | 22,5 | -5,3 |
| | 67 / Ende | 41,2 | 4,3 | -10,4 | 0,0 | -22,5 | 11,0 |
| | 108 / Ende | 1,1 | 0,0 | 54,3 | 0,0 | 0,0 | 0,0 |
| | 111 / Anfang | 1,4 | 0,0 | 39,6 | 0,0 | 0,0 | 0,0 |
| | 144 / Ende | 1,6 | 1,9 | 101,6 | 0,0 | -164,2 | 1,2 |
| | 316 / Anfang | -6,3 | 1,9 | 107,7 | 0,0 | 169,9 | -1,3 |
| CO11(2) | 67 / Anfang | -349,8 | -2,1 | -13,5 | 0,0 | -3,7 | 4,9 |
| | 67 / Ende | 493,7 | 11,8 | 7,8 | 0,1 | 3,7 | 21,1 |
| | 108 / Ende | -0,8 | 0,0 | 25,1 | 0,0 | 0,0 | 0,0 |
| | 111 / Anfang | 5,3 | 0,0 | 18,3 | 0,0 | 0,0 | 0,0 |
| | 144 / Ende | 11,6 | -1,8 | 45,5 | 0,0 | -66,5 | -1,0 |
| | 316 / Anfang | -13,2 | -1,9 | 55,0 | 0,0 | 92,6 | 1,2 |
| CO11(5) | 67 / Anfang | 294,1 | 3,4 | 24,3 | 0,0 | 32,3 | -8,2 |
| | 67 / Ende | -23,9 | 2,0 | -15,5 | 0,0 | -32,3 | 6,9 |
| | 108 / Ende | 1,0 | 0,0 | 48,2 | 0,0 | 0,0 | 0,0 |
| | 111 / Anfang | 0,8 | 0,0 | 35,1 | 0,0 | 0,0 | 0,0 |
| | 144 / Ende | -0,1 | 3,1 | 91,7 | 0,0 | -149,4 | 2,0 |
| | 316 / Anfang | -4,6 | 3,2 | 95,2 | 0,0 | 148,1 | -2,0 |
| CO11(6) | 67 / Anfang | 4,3 | 3,4 | -19,2 | 0,0 | -21,2 | -8,0 |
| | 67 / Ende | 215,6 | 1,9 | 8,5 | 0,0 | 21,2 | 5,6 |
| | 108 / Ende | -0,8 | 0,0 | 39,4 | 0,0 | 0,0 | 0,0 |
| | 111 / Anfang | 6,3 | 0,0 | 28,7 | 0,0 | 0,0 | 0,0 |
| | 144 / Ende | 14,8 | -3,0 | 74,7 | 0,0 | -122,2 | -1,7 |
| | 316 / Anfang | -16,0 | -3,0 | 77,1 | 0,0 | 119,7 | 1,7 |
| CO11(8) | 67 / Anfang | -248,2 | -2,9 | -13,8 | 0,1 | -3,5 | 7,1 |

| Name | Bauteil | N [kN] | Vy [kN] | Vz [kN] | Mx [kNm] | My [kNm] | Mz [kNm] |
|---|---|---|---|---|---|---|---|
| | 67 / Ende | 519,2 | 16,9 | 7,6 | 0,2 | 3,5 | 30,4 |
| | 108 / Ende | -0,2 | 0,0 | 48,2 | 0,0 | 0,0 | 0,0 |
| | 111 / Anfang | 6,1 | 0,0 | 35,1 | 0,0 | 0,0 | 0,0 |
| | 144 / Ende | 13,0 | -2,1 | 86,5 | -0,1 | -130,8 | -1,4 |
| | 316 / Anfang | -16,3 | -2,2 | 101,2 | 0,1 | 168,3 | 1,7 |

### Fehlende Lasten

| Name | X [kN] | Y [kN] | Z [kN] | Mx [kNm] | My [kNm] | Mz [kNm] |
|---|---|---|---|---|---|---|
| CO11(44) | 11,1 | -10,5 | 0,0 | 3,0 | 0,0 | 0,0 |
| CO11(45) | 3,7 | 2,9 | 0,0 | 1,4 | 0,0 | 0,0 |
| CO11(46) | 2,7 | -9,4 | 0,0 | 1,7 | 0,0 | 0,0 |
| CO11(47) | 9,0 | -3,4 | 0,0 | 3,2 | 0,0 | 0,0 |
| CO11(48) | 5,0 | -10,9 | 0,0 | 3,0 | 0,0 | 0,0 |
| CO11(49) | 7,7 | -0,6 | 0,0 | 2,8 | 0,0 | 0,0 |
| CO11(50) | 1,6 | -0,8 | 0,0 | 3,1 | 0,0 | 0,0 |
| CO9(51) | 3,0 | -11,4 | 0,0 | 0,2 | 0,0 | 0,0 |
| CO11(52) | 0,2 | 1,5 | 0,0 | 2,7 | 0,0 | 0,0 |
| CO11(31) | -2,0 | 2,8 | 0,0 | 1,4 | 0,0 | 0,0 |
| CO11(32) | 10,9 | -10,1 | 0,0 | 3,0 | 0,0 | 0,0 |
| CO11(37) | 7,5 | -0,5 | 0,0 | 3,1 | 0,0 | 0,0 |
| CO11(43) | -1,6 | 1,9 | 0,0 | 1,4 | 0,0 | 0,0 |
| CO11(23) | 10,5 | -7,4 | 0,0 | 3,3 | 0,0 | 0,0 |
| CO11(24) | 3,0 | -10,1 | 0,0 | 1,7 | 0,0 | 0,0 |
| CO11(26) | 4,5 | -8,3 | 0,0 | 3,3 | 0,0 | 0,0 |
| CO11(28) | 8,8 | -3,0 | 0,0 | 3,2 | 0,0 | 0,0 |
| CO11(30) | 9,1 | -3,4 | 0,0 | 2,8 | 0,0 | 0,0 |
| CO11(10) | 6,9 | 0,2 | 0,0 | 3,1 | 0,0 | 0,0 |
| CO11(13) | 4,9 | -9,0 | 0,0 | 3,3 | 0,0 | 0,0 |
| CO11(17) | 1,9 | -1,2 | 0,0 | 3,1 | 0,0 | 0,0 |
| CO11(2) | 8,1 | -6,5 | 0,0 | 1,6 | 0,0 | 0,0 |
| CO11(5) | 0,6 | 0,6 | 0,0 | 2,7 | 0,0 | 0,0 |
| CO11(6) | 4,0 | -10,1 | 0,0 | 2,5 | 0,0 | 0,0 |
| CO11(8) | 10,7 | -7,8 | 0,0 | 3,0 | 0,0 | 0,0 |

## Nachweis

### Übersicht

| Name | Wert | Nachweisstatus |
|---|---|---|
| Berechnung | 100,0% | OK |
| Platten | 1,3 < 5,0% | OK |
| Schrauben | 95,9 < 100% | OK |
| Schweißnähte | 99,5 < 100% | OK |
| Beulen | Nicht berechnet | |

## Platten

| Name | Material | $t_p$ [mm] | Lasten | $\sigma_{Ed}$ [MPa] | $\varepsilon_{Pl}$ [%] | $\sigma_{c,Ed}$ [MPa] | Status |
|---|---|---|---|---|---|---|---|
| 67-bfl 1 | Baustahl S 355 | 17,5 | CO11(30) | 133,0 | 0,0 | 0,0 | OK |
| 67-tfl 1 | Baustahl S 355 | 17,5 | CO11(8) | 133,8 | 0,0 | 0,0 | OK |
| 67-w 1 | Baustahl S 355 | 10,0 | CO11(47) | 293,5 | 0,0 | 88,0 | OK |
| 108-bfl 1 | S 355 | 8,0 | CO11(23) | 88,7 | 0,0 | 0,0 | OK |
| 108-tfl 1 | S 355 | 8,0 | CO11(23) | 90,7 | 0,0 | 0,0 | OK |
| 108-w 1 | S 355 | 5,3 | CO11(17) | 279,7 | 0,0 | 16,2 | OK |
| 111-bfl 1 | S 355 | 8,0 | CO11(37) | 65,4 | 0,0 | 0,0 | OK |
| 111-tfl 1 | S 355 | 8,0 | CO11(37) | 65,2 | 0,0 | 0,0 | OK |
| 111-w 1 | S 355 | 5,3 | CO11(26) | 212,1 | 0,0 | 12,9 | OK |
| 144-bfl 1 | Baustahl S 355 | 10,7 | CO11(50) | 355,1 | 0,1 | 0,0 | OK |
| 144-tfl 1 | Baustahl S 355 | 10,7 | CO11(50) | 338,7 | 0,0 | 0,0 | OK |
| 144-w 1 | Baustahl S 355 | 7,1 | CO11(50) | 355,3 | 0,2 | 0,0 | OK |
| 316-bfl 1 | Baustahl S 355 | 10,7 | CO11(23) | 355,6 | 0,3 | 0,0 | OK |
| 316-tfl 1 | Baustahl S 355 | 10,7 | CO11(47) | 355,1 | 0,1 | 0,0 | OK |
| 316-w 1 | Baustahl S 355 | 7,1 | CO11(47) | 356,3 | 0,6 | 0,0 | OK |
| Stirnblech1a | S 355 | 20,0 | CO11(50) | 355,3 | 0,1 | 81,4 | OK |
| Stirnblech1b | S 355 | 20,0 | CO11(23) | 355,8 | 0,4 | 88,3 | OK |
| Fahnenblech1 | S 355 | 10,0 | CO11(17) | 307,6 | 0,0 | 28,4 | OK |
| Fahnenblech2 | S 355 | 10,0 | CO11(26) | 233,4 | 0,0 | 20,6 | OK |
| Verstärkung1 | S 355 | 15,0 | CO11(50) | 316,7 | 0,0 | 0,0 | OK |
| Verstärkung2 | S 355 | 15,0 | CO11(47) | 357,6 | 1,3 | 0,0 | OK |
| Rippe1a | S 355 | 15,0 | CO9(51) | 143,8 | 0,0 | 0,0 | OK |
| Rippe1b | S 355 | 15,0 | CO9(51) | 146,2 | 0,0 | 0,0 | OK |
| Rippe1c | S 355 | 15,0 | CO9(51) | 137,7 | 0,0 | 0,0 | OK |
| Rippe1d | S 355 | 15,0 | CO9(51) | 138,2 | 0,0 | 0,0 | OK |

**Bemessungsdaten**

| Material | $f_y$ [MPa] | $\varepsilon_{lim}$ [%] |
|---|---|---|
| Baustahl S 355 | 355,0 | 5,0 |
| S 355 | 355,0 | 5,0 |

**Erläuterung von Symbolen**

| | |
|---|---|
| $t_p$ | Plattendicke |
| $\sigma_{Ed}$ | Vergleichsspannung |
| $\varepsilon_{Pl}$ | Plastische Dehnung |
| $\sigma_{c,Ed}$ | Kontaktspannung |
| $f_y$ | Streckgrenze |
| $\varepsilon_{lim}$ | Grenzwert plastische Dehnung |

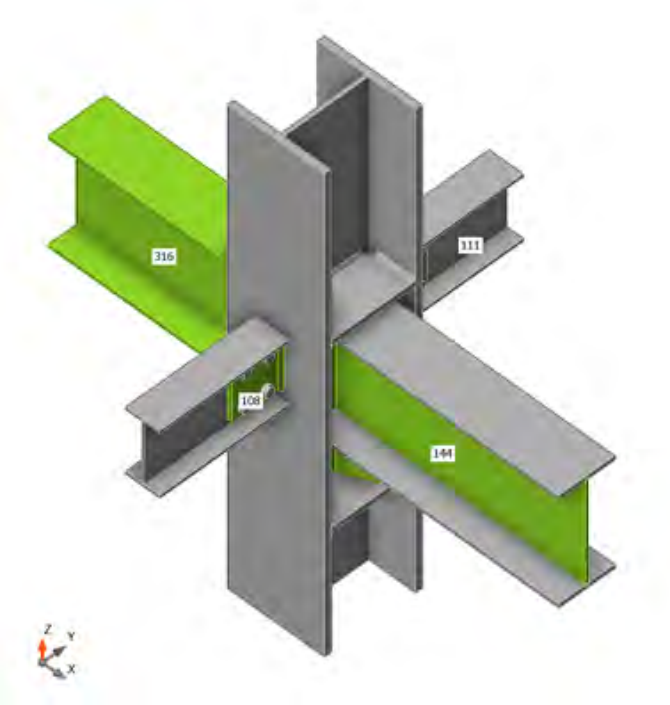


*Gesamt, CO11(47)*

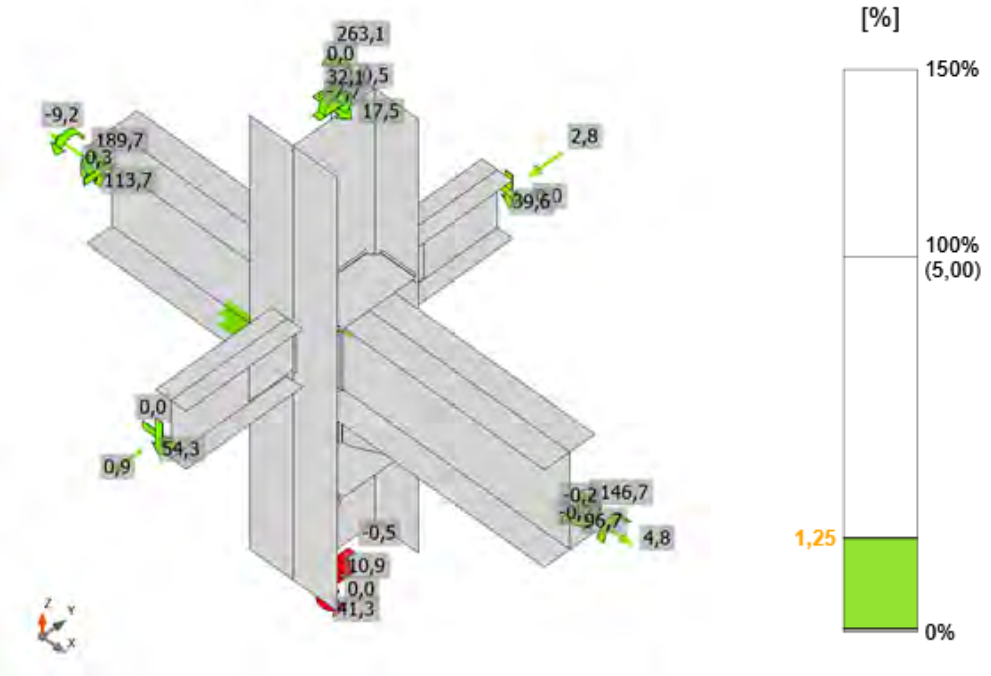


*Dehnung, CO11(47)*

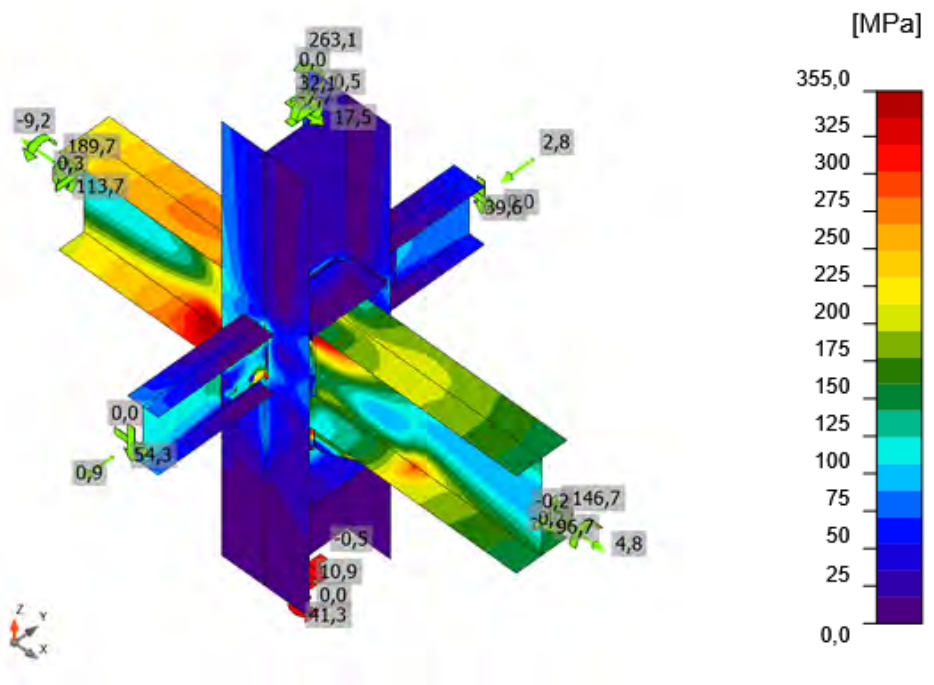


*Vergleichsspannung, CO11(47)*

## Schrauben

| Form | Position | Klasse | Lasten | $F_{t,Ed}$ [kN] | $F_{v,Ed}$ [kN] | $F_{b,Rd}$ [kN] | $Ut_t$ [%] | $Ut_s$ [%] | $Ut_{ts}$ [%] | Konstruktionsregeln | Status |
|---|---|---|---|---|---|---|---|---|---|---|---|
| 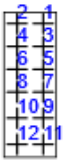 | B1 | M20 10.9 - 1 | CO11(47) | 169,1 | 2,7 | 196,0 | 95,9 | 2,8 | 71,2 | OK | OK |
| | B2 | M20 10.9 - 1 | CO11(47) | 169,1 | 3,0 | 196,0 | 95,9 | 3,0 | 71,5 | OK | OK |
| | B3 | M20 10.9 - 1 | CO11(47) | 130,0 | 9,3 | 158,9 | 73,7 | 10,3 | 62,1 | OK | OK |
| | B4 | M20 10.9 - 1 | CO11(23) | 130,4 | 9,6 | 158,9 | 73,9 | 10,6 | 62,6 | OK | OK |
| | B5 | M20 10.9 - 1 | CO11(47) | 60,7 | 10,5 | 158,9 | 34,4 | 11,9 | 35,3 | OK | OK |
| | B6 | M20 10.9 - 1 | CO11(47) | 60,6 | 10,5 | 158,9 | 34,4 | 12,1 | 35,3 | OK | OK |
| | B7 | M20 10.9 - 1 | CO11(47) | 16,4 | 11,1 | 188,6 | 9,3 | 11,3 | 17,9 | OK | OK |
| | B8 | M20 10.9 - 1 | CO11(47) | 16,5 | 11,1 | 188,6 | 9,3 | 11,3 | 18,0 | OK | OK |
| | B9 | M20 10.9 - 1 | CO11(10) | 0,0 | 12,4 | 188,6 | 0,0 | 12,7 | 12,7 | OK | OK |
| | B10 | M20 10.9 - 1 | CO11(10) | 0,0 | 12,8 | 188,6 | 0,0 | 13,0 | 13,0 | OK | OK |
| | B11 | M20 10.9 - 1 | CO11(28) | 8,1 | 17,8 | 196,0 | 4,6 | 18,2 | 21,5 | OK | OK |
| | B12 | M20 10.9 - 1 | CO11(28) | 8,3 | 17,9 | 196,0 | 4,7 | 18,2 | 21,6 | OK | OK |
| 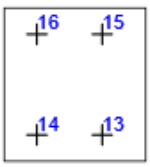 | B13 | M16 8.8 - 2 | CO11(37) | 2,1 | 13,5 | 67,4 | 2,3 | 22,4 | 24,0 | OK | OK |
| | B14 | M16 8.8 - 2 | CO11(37) | 3,3 | 24,0 | 56,7 | 3,7 | 42,3 | 42,5 | OK | OK |
| | B15 | M16 8.8 - 2 | CO11(37) | 5,0 | 13,8 | 46,2 | 5,5 | 29,8 | 26,8 | OK | OK |
| | B16 | M16 8.8 - 2 | CO11(37) | 2,5 | 24,3 | 61,6 | 2,8 | 40,3 | 42,2 | OK | OK |
| 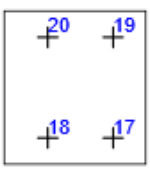 | B17 | M16 8.8 - 2 | CO11(26) | 2,7 | 18,9 | 56,8 | 3,0 | 33,3 | 33,5 | OK | OK |
| | B18 | M16 8.8 - 2 | CO11(23) | 1,8 | 11,6 | 72,1 | 2,0 | 19,2 | 20,7 | OK | OK |
| | B19 | M16 8.8 - 2 | CO11(26) | 1,9 | 17,7 | 61,6 | 2,1 | 29,4 | 30,9 | OK | OK |
| | B20 | M16 8.8 - 2 | CO11(50) | 3,9 | 9,5 | 46,2 | 4,3 | 20,6 | 18,8 | OK | OK |

**Bemessungsdaten**

| Klasse | $F_{t,Rd}$ [kN] | $B_{p,Rd}$ [kN] | $F_{v,Rd}$ [kN] |
|---|---|---|---|
| M20 10.9 - 1 | 176,4 | 469,4 | 98,0 |
| M16 8.8 - 2 | 90,4 | 99,4 | 60,3 |

**Erläuterung von Symbolen**

| | |
|---|---|
| $F_{t,Ed}$ | Zugkraft |
| $F_{v,Ed}$ | Resultierende der Schraubenscherkräfte Vy und Vz in Scherebenen |
| $F_{b,Rd}$ | Lochleibungstragfähigkeit der Platte nach EN 1993-1-8 Tab. 3.4 |
| $Ut_t$ | Ausnutzung unter Zug |
| $Ut_s$ | Ausnutzung unter Schub |
| $Ut_{ts}$ | Interaktion von Zug und Schub EN_1993-1-8 Tabelle 3.4 |
| $F_{t,Rd}$ | Zugtragfähigkeit der Schraube nach EN 1993-1-8 Tabelle 3.4 |
| $B_{p,Rd}$ | Durchstanztragfähigkeit nach EN 1993-1-8 Tabelle 3.4 |
| $F_{v,Rd}$ | Schertragfähigkeit der Schraube nach EN 1993-1-8 Tabelle 3.4 |

## Schweißnähte

| Position | Kante | $T_w$ [mm] | L [mm] | Lasten | $\sigma_{w,Ed}$ [MPa] | $\varepsilon_{Pl}$ [%] | $\sigma_{\perp}$ [MPa] | $\tau_{\perp}$ [MPa] | $\tau_{\parallel}$ [MPa] | Ut [%] | $Ut_c$ [%] | Konstruktionsregeln | Status |
|---|---|---|---|---|---|---|---|---|---|---|---|---|---|
| Stirnblech1a | 144-bfl 1 | ◢ 6,0 ◣ | 150 | CO11(13) | 294,7 | 0,0 | 184,6 | 93,6 | 94,0 | 67,7 | 54,6 | OK | OK |
| | | ◢ 6,0 ◣ | 150 | CO9(51) | 261,1 | 0,0 | -146,8 | -101,6 | 72,2 | 59,9 | 43,1 | OK | OK |
| Stirnblech1a | 144-tfl 1 | ◢ 6,0 ◣ | 150 | CO11(10) | 184,8 | 0,0 | -86,5 | -86,2 | -38,1 | 42,4 | 34,7 | OK | OK |
| | | ◢ 6,0 ◣ | 150 | CO11(52) | 139,7 | 0,0 | -61,2 | 68,1 | 24,8 | 32,1 | 23,3 | OK | OK |
| Stirnblech1a | 144-w 1 | ◢ 6,0 ◣ | 288 | CO11(23) | 340,2 | 0,0 | 169,0 | 167,2 | -33,2 | 78,1 | 52,2 | OK | OK |
| | | ◢ 6,0 ◣ | 288 | CO11(47) | 340,3 | 0,0 | 168,3 | -168,6 | 27,2 | 78,1 | 52,9 | OK | OK |
| Stirnblech1b | 316-bfl 1 | ◢ 6,0 ◣ | 150 | CO11(23) | 402,5 | 0,0 | 252,4 | 115,5 | -139,4 | 92,4 | 69,6 | OK | OK |
| | | ◢ 6,0 ◣ | 149 | CO11(23) | 259,2 | 0,0 | -0,4 | 25,5 | -147,5 | 59,5 | 38,9 | OK | OK |
| Stirnblech1b | 316-tfl 1 | ◢ 6,0 ◣ | 150 | CO11(23) | 304,4 | 0,0 | -147,8 | -112,7 | -104,4 | 69,9 | 54,9 | OK | OK |
| | | ◢ 6,0 ◣ | 150 | CO11(23) | 216,5 | 0,0 | -75,5 | 110,6 | 38,6 | 49,7 | 39,4 | OK | OK |
| Stirnblech1b | 316-w 1 | ◢ 6,0 ◣ | 288 | CO11(47) | 382,4 | 0,0 | 189,3 | 189,5 | 29,6 | 87,8 | 50,1 | OK | OK |
| | | ◢ 6,0 ◣ | 288 | CO11(47) | 384,6 | 0,0 | 190,3 | -190,3 | -31,9 | 88,3 | 50,2 | OK | OK |
| 67-bfl 1 | Fahnenblech1 | ◢ 6,0 ◣ | 139 | CO11(10) | 342,6 | 0,0 | -185,2 | -154,6 | -61,7 | 78,7 | 48,7 | OK | OK |
| | | ◢ 6,0 ◣ | 138 | CO11(37) | 318,9 | 0,0 | 126,7 | -127,8 | 110,6 | 73,2 | 49,9 | OK | OK |
| 67-tfl 1 | Fahnenblech2 | ◢ 6,0 ◣ | 139 | CO11(10) | 275,9 | 0,0 | -140,8 | -115,6 | 73,5 | 63,3 | 37,4 | OK | OK |
| | | ◢ 6,0 ◣ | 139 | CO11(10) | 271,5 | 0,0 | -97,5 | 122,8 | -79,6 | 62,3 | 41,2 | OK | OK |
| Stirnblech1a | Verstärkung1 | ◢ 8,0 ◣ | 149 | CO11(47) | 365,6 | 0,0 | -178,3 | -178,4 | 46,1 | 83,9 | 47,3 | OK | OK |
| | | ◢ 8,0 ◣ | 149 | CO11(47) | 364,5 | 0,0 | -178,2 | 178,1 | -44,5 | 83,7 | 47,1 | OK | OK |
| 144-tfl 1 | Verstärkung1 | ◢ 8,0 ◣ | 299 | CO11(50) | 426,9 | 0,1 | -121,4 | -120,2 | -203,4 | 98,0 | 59,8 | OK | OK |

| Position | Kante | $T_w$ [mm] | L [mm] | Lasten | $\sigma_{w,Ed}$ [MPa] | $\varepsilon_{Pl}$ [%] | $\sigma_{\perp}$ [MPa] | $\tau_{\perp}$ [MPa] | $\tau_{\parallel}$ [MPa] | Ut [%] | $Ut_c$ [%] | Konstruktionsregeln | Status |
|---|---|---|---|---|---|---|---|---|---|---|---|---|---|
| | | ◢ 8,0 ◣ | 299 | CO11(50) | 426,9 | 0,0 | -120,1 | 121,2 | 203,1 | 98,0 | 59,6 | OK | OK |
| Stirnblech1b | Verstärkung2 | ◢ 8,0 ◣ | 129 | CO11(47) | 433,2 | 3,7 | -209,3 | -209,3 | 64,5 | 99,5 | 91,5 | OK | OK |
| | | ◢ 8,0 ◣ | 129 | CO11(47) | 433,2 | 3,6 | -209,3 | 209,2 | -64,8 | 99,5 | 91,5 | OK | OK |
| 316-tfl 1 | Verstärkung2 | ◢ 8,0 ◣ | 259 | CO11(47) | 427,5 | 0,4 | -105,6 | -106,2 | -214,3 | 98,1 | 70,3 | OK | OK |
| | | ◢ 8,0 ◣ | 259 | CO11(47) | 427,5 | 0,4 | -106,6 | 105,9 | 214,3 | 98,1 | 70,4 | OK | OK |
| 67-bfl 1 | Rippe1a | ◢ 6,0 ◣ | 101 | CO9(51) | 53,7 | 0,0 | 26,6 | 3,4 | -26,7 | 12,3 | 10,5 | OK | OK |
| | | ◢ 6,0 ◣ | 101 | CO9(51) | 61,5 | 0,0 | -34,4 | 11,2 | 27,2 | 14,1 | 11,7 | OK | OK |
| 67-w 1 | Rippe1a | ◢ 6,0 ◣ | 176 | CO9(51) | 58,1 | 0,0 | -35,8 | -18,1 | 19,3 | 13,3 | 10,3 | OK | OK |
| | | ◢ 6,0 ◣ | 176 | CO9(51) | 161,7 | 0,0 | 52,2 | -57,8 | 66,8 | 37,1 | 30,7 | OK | OK |
| 67-tfl 1 | Rippe1a | ◢ 6,0 ◣ | 101 | CO9(51) | 71,9 | 0,0 | 27,1 | 1,4 | 38,4 | 16,5 | 9,9 | OK | OK |
| | | ◢ 6,0 ◣ | 101 | CO9(51) | 84,6 | 0,0 | -44,5 | 18,7 | -37,1 | 19,4 | 11,7 | OK | OK |
| 67-bfl 1 | Rippe1b | ◢ 6,0 ◣ | 101 | CO9(51) | 76,7 | 0,0 | 42,9 | 17,3 | 32,4 | 17,6 | 12,6 | OK | OK |
| | | ◢ 6,0 ◣ | 101 | CO9(51) | 65,2 | 0,0 | -28,8 | 3,1 | -33,7 | 15,0 | 11,0 | OK | OK |
| 67-w 1 | Rippe1b | ◢ 6,0 ◣ | 177 | CO9(51) | 171,0 | 0,0 | -58,8 | -67,0 | 64,0 | 39,2 | 31,9 | OK | OK |
| | | ◢ 6,0 ◣ | 176 | CO9(51) | 57,9 | 0,0 | 23,6 | -30,3 | 3,7 | 13,3 | 9,2 | OK | OK |
| 67-tfl 1 | Rippe1b | ◢ 6,0 ◣ | 101 | CO9(51) | 60,8 | 0,0 | 32,6 | 9,2 | -28,1 | 14,0 | 10,9 | OK | OK |
| | | ◢ 6,0 ◣ | 101 | CO9(51) | 57,4 | 0,0 | -28,8 | 5,5 | 28,1 | 13,2 | 9,8 | OK | OK |
| 67-bfl 1 | Rippe1c | ◢ 6,0 ◣ | 101 | CO11(28) | 68,6 | 0,0 | 31,9 | 13,1 | 32,5 | 15,7 | 10,9 | OK | OK |
| | | ◢ 6,0 ◣ | 101 | CO9(51) | 55,3 | 0,0 | -16,4 | 3,2 | -30,3 | 12,7 | 10,4 | OK | OK |
| 67-w 1 | Rippe1c | ◢ 6,0 ◣ | 176 | CO9(51) | 127,4 | 0,0 | -66,8 | -46,5 | -42,0 | 29,3 | 24,5 | OK | OK |

| Position | Kante | $T_w$ [mm] | L [mm] | Lasten | $\sigma_{w,Ed}$ [MPa] | $\varepsilon_{Pl}$ [%] | $\sigma_{\perp}$ [MPa] | $\tau_{\perp}$ [MPa] | $\tau_{\parallel}$ [MPa] | Ut [%] | $Ut_c$ [%] | Konstruktionsregeln | Status |
|---|---|---|---|---|---|---|---|---|---|---|---|---|---|
| | | ◢ 6,0 ◣ | 176 | CO9(51) | 53,1 | 0,0 | 5,7 | -27,2 | 13,9 | 12,2 | 10,4 | OK | OK |
| 67-tfl 1 | Rippe1c | ◢ 6,0 ◣ | 101 | CO11(28) | 66,6 | 0,0 | 31,4 | 13,4 | -31,1 | 15,3 | 9,5 | OK | OK |
| | | ◢ 6,0 ◣ | 101 | CO9(51) | 51,6 | 0,0 | -26,5 | 10,5 | 23,3 | 11,8 | 9,6 | OK | OK |
| 67-bfl 1 | Rippe1d | ◢ 6,0 ◣ | 101 | CO9(51) | 53,1 | 0,0 | 24,0 | 8,4 | -26,0 | 12,2 | 10,7 | OK | OK |
| | | ◢ 6,0 ◣ | 101 | CO11(30) | 57,2 | 0,0 | -17,8 | 6,6 | 30,7 | 13,1 | 9,5 | OK | OK |
| 67-w 1 | Rippe1d | ◢ 6,0 ◣ | 177 | CO9(51) | 57,7 | 0,0 | -8,9 | -32,4 | -6,2 | 13,3 | 11,3 | OK | OK |
| | | ◢ 6,0 ◣ | 176 | CO9(51) | 132,5 | 0,0 | 69,2 | -48,2 | -44,0 | 30,4 | 24,3 | OK | OK |
| 67-tfl 1 | Rippe1d | ◢ 6,0 ◣ | 101 | CO9(51) | 54,9 | 0,0 | 15,2 | 2,4 | 30,3 | 12,6 | 8,7 | OK | OK |
| | | ◢ 6,0 ◣ | 101 | CO9(51) | 64,9 | 0,0 | -28,0 | 15,2 | -30,2 | 14,9 | 9,6 | OK | OK |

**Bemessungsdaten**

| Material | $f_u$ [MPa] | $\beta_w$ [-] | $\sigma_{w,Rd}$ [MPa] | 0.9 σ [MPa] |
|---|---|---|---|---|
| S 355 | 490,0 | 0,90 | 435,6 | 352,8 |

**Erläuterung von Symbolen**

| | |
|---|---|
| $T_w$ | Nahtdicke a |
| L | Länge |
| $\sigma_{w,Ed}$ | Vergleichsspannung |
| $\varepsilon_{Pl}$ | Dehnung |
| $\sigma_{\perp}$ | Senkrechte Spannung |
| $\tau_{\perp}$ | Scherspannung senkrecht zur Schweißnahtachse |
| $\tau_{\parallel}$ | Scherspannung parallel zur Schweißnahtachse |
| Ut | Ausnutzung |
| $Ut_c$ | Schätzung der Schweißnahtkapazität |
| ◢ | Kehlnaht |
| $f_u$ | Grenzfestigkeit der Schweißnaht |
| $\beta_w$ | Korrelationsfaktor nach EN 1993-1-8 Tab. 4.1 |
| $\sigma_{w,Rd}$ | Tragfähigkeit der Schweißnaht |
| 0.9 σ | Senkrechter Spannungswiderstand - 0.9*fu / γM2 |

## Beulen

**Die Beulanalyse wurde nicht berechnet.**

## Normeinstellungen

| Position | Wert | Einheit | Bezug |
|---|---|---|---|
| Sicherheitsfaktor $\gamma_{M0}$ | 1,00 | - | EN 1993-1-1 – 6.1 |
| Sicherheitsfaktor $\gamma_{M1}$ | 1,00 | - | EN 1993-1-1 – 6.1 |
| Sicherheitsfaktor $\gamma_{M2}$ | 1,25 | - | EN 1993-1-1 – 6.1 |
| Sicherheitsfaktor $\gamma_{M3}$ | 1,25 | - | EN 1993-1-8 – Table 2.1 |
| Sicherheitsfaktor $\gamma_{C}$ | 1,50 | - | EN 1992-1-1 – 2.4.2.4 |
| Sicherheitsfaktor $\gamma_{Inst}$ | 1,20 | - | EN 1992-4 – Table 4.1 |
| Verbindungskoeffizient βj | 0,67 | - | EN 1993-1-8 – 6.2.5(7) |
| Wirksame Fläche - Einfluss der Netzgröße | 0,10 | - | |
| Reibungsbeiwert - Beton | 0,25 | - | EN 1993-1-8 |
| Reibungskoeffizient bei gleitfesten Verbindungen | 0,30 | - | EN 1993-1-8 – Table 3.7 |
| Plastische Dehnung - Grenzwert | 0,05 | - | EN 1993-1-5 |
| Konstruktionsregeln | Ja | | |
| Distance between bolts [d0] | 2,20 | - | EN 1993-1-8 – Table 3.3 |
| Distance between bolts and edge [d0] | 1,20 | - | EN 1993-1-8 – Table 3.3 |
| Nachweis der Tragfähigkeit bei Betonausbruch | Beide | | |
| Berechnetes αb für Lochleibungsnachweis anwenden. | Ja | | EN 1993-1-8 – Table 3.4 |
| Gerissener Beton | Ja | | EN 1992-4 |
| Überprüfen der lokalen Verformung | Ja | | |
| Lokale Verformung - Grenzwert | 0,03 | - | CIDECT DG 1, 3 – 1.1 |
| Geometrische Nichtlinearität (GMNA) | Ja | | Analyse mit großen Verformungen für Verbindungen mit Hohlprofilen |
| Ausgesteiftes System | Nein | | EN 1993-1-8 – 5.2.2.5 |

## Projektdaten

| | |
|---|---|
| Projektname | IdeaStatiCa-Stadion_Fazanerija_JK-6_BR - 58 |
| Projektnummer | Detail D14-O3 |
| Autor | mag. Igor Gorup dipl. ing. |
| Beschreibung | |
| Datum | 18.06.2025 |
| Norm | EN |

## Material

| | |
|---|---|
| Stahl | Baustahl S 355, Baustahl S 235, S 355 |

# Projektposition 58

## Bemessung

| | |
|---|---|
| Name | 58 |
| Beschreibung | |
| Berechnung | Spannung, Dehnung/ Lasten im Gleichgewicht |

### Bauteile

#### Geometrie

| Name | Querschnitt | β – Rotation [°] | Y - Rotation [°] | α - Rotation [°] | Abstand ex [mm] | Abstand ey [mm] | Abstand ez [mm] |
|---|---|---|---|---|---|---|---|
| 111 | 530 - IPE180 | -90,0 | 0,0 | -180,0 | 0 | 0 | -30 |
| 68 | 289 - HEB260 | -180,0 | 90,0 | 90,0 | 0 | 0 | 0 |
| 145 | 24 - IPE240 | 0,0 | 0,0 | -180,0 | 0 | 0 | 0 |
| 320 | 24 - IPE240 | 0,0 | 0,0 | -180,0 | 0 | 0 | 0 |

#### Auflager und Kräfte

| Name | Auflager | Kräfte in | X [mm] |
|---|---|---|---|
| 111 / ende | Mx-My-Mz | Schrauben | 200 |
| 68 / anfang | N-Vy-Vz-Mx-My-Mz | Position | 0 |
| 68 / ende | | Position | 0 |
| 145 / ende | | Position | 0 |
| 320 / anfang | | Position | 0 |

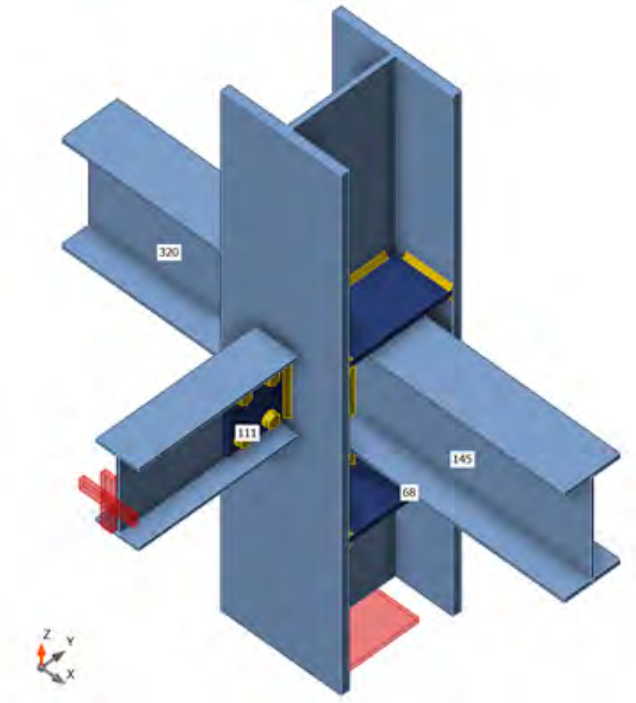


### Querschnitte

| Name | Material |
|---|---|
| 530 - IPE180 | S 355 |
| 289 - HEB260 | Baustahl S 355 |
| 24 - IPE240 | Baustahl S 355 |

## Schrauben

| Name | Durchmesser [mm] | $f_y$ [MPa] | $f_u$ [MPa] | Bruttofläche [$mm^2$] |
|---|---|---|---|---|
| M16 8.8 | 16 | 640,0 | 800,0 | 201 |
| M20 8.8 | 20 | 640,0 | 800,0 | 314 |

## Lasteinwirkungen (Kräfte im Gleichgewicht)

| Name | Bauteil | N [kN] | Vy [kN] | Vz [kN] | Mx [kNm] | My [kNm] | Mz [kNm] |
|---|---|---|---|---|---|---|---|
| CO11(35) | 111 / Ende | -7,8 | 0,0 | 35,2 | 0,0 | 0,0 | 0,0 |
| | 68 / Anfang | 836,0 | -1,0 | -23,7 | 0,0 | -21,8 | 0,6 |
| | 68 / Ende | -722,3 | 8,4 | 13,7 | 0,1 | 21,8 | 17,2 |
| | 145 / Ende | 22,3 | -1,1 | 36,6 | 0,0 | -52,0 | -0,7 |
| | 320 / Anfang | -22,5 | -1,1 | 42,1 | 0,0 | 69,8 | 0,8 |
| CO11(36) | 111 / Ende | 0,1 | 0,0 | 18,3 | 0,0 | 0,0 | 0,0 |
| | 68 / Anfang | -200,9 | 4,2 | 23,0 | 0,0 | 26,1 | -9,5 |
| | 68 / Ende | 253,6 | -1,6 | -13,9 | 0,0 | -26,1 | -1,3 |
| | 145 / Ende | -0,9 | 2,1 | 18,7 | 0,0 | -30,7 | 1,0 |
| | 320 / Anfang | -3,7 | 2,1 | 15,7 | 0,0 | 19,8 | -0,9 |
| CO11(37) | 111 / Ende | -6,0 | 0,0 | 18,3 | 0,0 | 0,0 | 0,0 |
| | 68 / Anfang | 485,8 | 3,8 | -19,7 | 0,0 | -22,2 | -9,9 |
| | 68 / Ende | -422,4 | -0,7 | 9,4 | 0,0 | 22,2 | 0,5 |
| | 145 / Ende | 16,4 | -0,9 | 23,8 | 0,0 | -39,5 | -0,5 |
| | 320 / Anfang | -16,8 | -0,9 | 21,3 | 0,0 | 30,0 | 0,5 |
| CO11(38) | 111 / Ende | -5,9 | 0,0 | 39,6 | 0,0 | 0,0 | 0,0 |
| | 68 / Anfang | 811,5 | -1,8 | -14,8 | 0,0 | -10,1 | 2,6 |
| | 68 / Ende | -687,1 | 9,3 | 8,6 | 0,1 | 10,1 | 18,4 |
| | 145 / Ende | 17,0 | -0,7 | 39,2 | 0,0 | -55,0 | -0,5 |
| | 320 / Anfang | -17,8 | -0,7 | 45,6 | 0,0 | 76,1 | 0,6 |
| CO11(39) | 111 / Ende | -6,8 | 0,0 | 35,1 | 0,0 | 0,0 | 0,0 |
| | 68 / Anfang | 608,0 | 3,7 | -20,1 | -0,1 | -22,4 | -10,4 |
| | 68 / Ende | -497,2 | 1,5 | 9,2 | 0,0 | 22,4 | 4,9 |
| | 145 / Ende | 18,9 | -1,0 | 38,5 | 0,0 | -61,0 | -0,7 |
| | 320 / Anfang | -19,9 | -1,0 | 37,2 | 0,0 | 55,4 | 0,6 |
| CO11(40) | 111 / Ende | -3,1 | -0,1 | 35,1 | 0,0 | 0,0 | 0,0 |
| | 68 / Anfang | 930,5 | -3,0 | -2,4 | 0,0 | 9,4 | 6,1 |
| | 68 / Ende | -815,9 | 9,6 | 1,4 | 0,0 | -9,4 | 19,0 |
| | 145 / Ende | 9,0 | -0,1 | 35,9 | 0,0 | -49,1 | -0,1 |
| | 320 / Anfang | -10,1 | -0,1 | 43,5 | 0,0 | 74,2 | 0,2 |
| CO11(41) | 111 / Ende | -5,2 | 0,0 | 39,6 | 0,0 | 0,0 | 0,0 |
| | 68 / Anfang | 800,8 | 2,8 | -12,2 | 0,0 | -8,6 | -8,6 |
| | 68 / Ende | -676,6 | 2,5 | 4,6 | 0,0 | 8,6 | 6,8 |
| | 145 / Ende | 14,6 | -0,7 | 42,4 | 0,0 | -66,2 | -0,5 |
| | 320 / Anfang | -16,1 | -0,7 | 42,2 | 0,0 | 64,5 | 0,5 |
| CO9(42) | 111 / Ende | -4,0 | 0,0 | 0,0 | 0,0 | 0,0 | 0,0 |
| | 68 / Anfang | 70,1 | -13,4 | -27,0 | 0,0 | -33,9 | 31,2 |
| | 68 / Ende | -69,7 | 10,0 | 17,7 | 0,0 | 33,9 | 14,2 |
| | 145 / Ende | 11,5 | 0,0 | -6,2 | 0,0 | 22,1 | 0,0 |
| | 320 / Anfang | -9,4 | 0,0 | 6,7 | 0,0 | 23,3 | 0,0 |
| CO11(43) | 111 / Ende | -6,6 | 0,0 | 18,3 | 0,0 | 0,0 | 0,0 |
| | 68 / Anfang | 496,0 | -0,6 | -22,1 | 0,0 | -23,6 | 0,2 |
| | 68 / Ende | -432,5 | 5,9 | 13,3 | 0,1 | 23,6 | 11,6 |
| | 145 / Ende | 18,6 | -0,9 | 20,8 | 0,0 | -29,1 | -0,5 |
| | 320 / Anfang | -18,4 | -1,0 | 24,5 | 0,0 | 40,9 | 0,6 |
| CO11(44) | 111 / Ende | -0,8 | 0,0 | 18,3 | 0,0 | 0,0 | 0,0 |
| | 68 / Anfang | 80,5 | -0,5 | 21,0 | 0,0 | 29,2 | 0,2 |

| Name | Bauteil | N [kN] | Vy [kN] | Vz [kN] | Mx [kNm] | My [kNm] | Mz [kNm] |
|---|---|---|---|---|---|---|---|
| | 68 / Ende | -24,1 | 5,6 | -10,6 | -0,1 | -29,2 | 10,4 |
| | 145 / Ende | 2,0 | 2,1 | 17,4 | 0,0 | -23,3 | 0,9 |
| | 320 / Anfang | -6,1 | 2,1 | 20,7 | 0,0 | 33,9 | -1,0 |
| CO11(45) | 111 / Ende | -7,8 | 0,0 | 35,2 | 0,0 | 0,0 | 0,0 |
| | 68 / Anfang | 892,5 | -1,0 | -23,9 | 0,0 | -20,9 | 0,6 |
| | 68 / Ende | -778,1 | 8,5 | 14,1 | 0,1 | 20,9 | 17,4 |
| | 145 / Ende | 22,2 | -1,1 | 36,9 | 0,0 | -52,5 | -0,7 |
| | 320 / Anfang | -22,4 | -1,1 | 42,5 | 0,0 | 70,5 | 0,9 |
| CO11(46) | 111 / Ende | -0,5 | 0,0 | 35,1 | 0,0 | 0,0 | 0,0 |
| | 68 / Anfang | -81,3 | 4,1 | 24,2 | 0,1 | 28,3 | -10,1 |
| | 68 / Ende | 181,5 | 0,7 | -14,7 | 0,0 | -28,3 | 3,1 |
| | 145 / Ende | 1,1 | 2,2 | 33,4 | 0,0 | -52,2 | 1,2 |
| | 320 / Anfang | -6,6 | 2,2 | 31,6 | 0,0 | 45,2 | -1,1 |
| CO11(47) | 111 / Ende | -2,3 | 0,0 | 35,1 | 0,0 | 0,0 | 0,0 |
| | 68 / Anfang | 655,5 | -1,8 | 12,4 | 0,0 | 25,2 | 2,9 |
| | 68 / Ende | -545,3 | 8,9 | -6,7 | -0,1 | -25,2 | 17,5 |
| | 145 / Ende | 6,6 | 1,3 | 34,5 | 0,0 | -47,6 | 0,6 |
| | 320 / Anfang | -9,9 | 1,3 | 40,6 | 0,0 | 68,0 | -0,6 |
| CO11(48) | 111 / Ende | -1,1 | 0,0 | 35,1 | 0,0 | 0,0 | 0,0 |
| | 68 / Anfang | -71,8 | -0,4 | 22,1 | 0,0 | 27,1 | -0,2 |
| | 68 / Ende | 172,0 | 7,3 | -11,3 | -0,1 | -27,1 | 13,4 |
| | 145 / Ende | 3,3 | 2,2 | 30,6 | 0,0 | -42,3 | 1,0 |
| | 320 / Anfang | -8,2 | 2,2 | 34,6 | 0,0 | 55,4 | -1,1 |
| CO11(30) | 111 / Ende | -7,1 | 0,0 | 35,1 | 0,0 | 0,0 | 0,0 |
| | 68 / Anfang | 881,7 | 3,5 | -21,3 | -0,1 | -19,3 | -10,7 |
| | 68 / Ende | -767,4 | 1,7 | 10,1 | 0,0 | 19,3 | 5,6 |
| | 145 / Ende | 19,8 | -1,1 | 40,2 | 0,0 | -63,9 | -0,7 |
| | 320 / Anfang | -20,7 | -1,1 | 39,0 | 0,0 | 58,7 | 0,7 |
| CO11(32) | 111 / Ende | -0,5 | 0,0 | 18,3 | 0,0 | 0,0 | 0,0 |
| | 68 / Anfang | -191,5 | -0,3 | 20,9 | 0,0 | 24,9 | -0,2 |
| | 68 / Ende | 244,3 | 4,9 | -10,5 | -0,1 | -24,9 | 8,9 |
| | 145 / Ende | 1,2 | 2,1 | 16,0 | 0,0 | -21,1 | 0,9 |
| | 320 / Anfang | -5,3 | 2,1 | 18,6 | 0,0 | 29,8 | -1,0 |
| CO11(13) | 111 / Ende | -6,2 | 0,0 | 35,1 | 0,0 | 0,0 | 0,0 |
| | 68 / Anfang | 1072,3 | -1,9 | -16,2 | 0,0 | -7,0 | 3,0 |
| | 68 / Ende | -955,7 | 9,1 | 9,6 | 0,1 | 7,0 | 18,8 |
| | 145 / Ende | 17,6 | -0,7 | 37,4 | 0,0 | -52,6 | -0,5 |
| | 320 / Anfang | -18,0 | -0,8 | 44,1 | 0,0 | 74,4 | 0,7 |
| CO11(16) | 111 / Ende | -0,1 | 0,0 | 28,7 | 0,0 | 0,0 | 0,0 |
| | 68 / Anfang | -170,5 | 4,2 | 23,6 | 0,0 | 26,8 | -9,9 |
| | 68 / Ende | 249,6 | -0,4 | -14,2 | 0,0 | -26,8 | 1,0 |
| | 145 / Ende | -0,1 | 2,2 | 26,4 | 0,0 | -42,0 | 1,1 |
| | 320 / Anfang | -5,1 | 2,2 | 24,0 | 0,0 | 33,1 | -1,0 |
| CO11(17) | 111 / Ende | -6,3 | 0,0 | 28,7 | 0,0 | 0,0 | 0,0 |
| | 68 / Anfang | 517,2 | 3,7 | -19,8 | 0,0 | -22,6 | -10,2 |
| | 68 / Ende | -427,4 | 0,5 | 9,3 | 0,0 | 22,6 | 2,8 |
| | 145 / Ende | 17,5 | -1,0 | 31,5 | 0,0 | -50,8 | -0,6 |
| | 320 / Anfang | -18,3 | -1,0 | 29,6 | 0,0 | 43,3 | 0,6 |
| CO11(19) | 111 / Ende | -0,9 | 0,0 | 35,1 | 0,0 | 0,0 | 0,0 |

| Name | Bauteil | N [kN] | Vy [kN] | Vz [kN] | Mx [kNm] | My [kNm] | Mz [kNm] |
|---|---|---|---|---|---|---|---|
| | 68 / Anfang | 134,1 | 3,9 | 24,3 | 0,0 | 31,5 | -10,0 |
| | 68 / Ende | -31,1 | 1,1 | -15,3 | 0,0 | -31,5 | 4,0 |
| | 145 / Ende | 2,0 | 2,2 | 34,7 | 0,0 | -54,3 | 1,1 |
| | 320 / Anfang | -7,5 | 2,2 | 33,2 | 0,0 | 48,2 | -1,1 |
| CO11(21) | 111 / Ende | -0,8 | 0,0 | 35,1 | 0,0 | 0,0 | 0,0 |
| | 68 / Anfang | 190,4 | 3,9 | 24,3 | 0,0 | 32,6 | -10,0 |
| | 68 / Ende | -86,8 | 1,2 | -15,1 | 0,0 | -32,6 | 4,1 |
| | 145 / Ende | 1,9 | 2,2 | 35,0 | 0,0 | -54,8 | 1,1 |
| | 320 / Anfang | -7,4 | 2,2 | 33,5 | 0,0 | 48,9 | -1,1 |
| CO11(4) | 111 / Ende | -2,9 | -0,1 | 39,6 | 0,0 | 0,0 | 0,0 |
| | 68 / Anfang | 670,0 | -2,8 | -1,2 | 0,0 | 6,1 | 5,6 |
| | 68 / Ende | -547,7 | 9,6 | 0,8 | 0,0 | -6,1 | 18,4 |
| | 145 / Ende | 8,4 | -0,1 | 37,8 | 0,0 | -51,7 | -0,1 |
| | 320 / Anfang | -9,8 | -0,1 | 45,0 | 0,0 | 75,8 | 0,1 |
| CO11(5) | 111 / Ende | -5,9 | 0,0 | 39,6 | 0,0 | 0,0 | 0,0 |
| | 68 / Anfang | 755,0 | -1,7 | -14,6 | 0,0 | -11,0 | 2,6 |
| | 68 / Ende | -631,3 | 9,2 | 8,2 | 0,1 | 11,0 | 18,2 |
| | 145 / Ende | 17,1 | -0,7 | 38,9 | 0,0 | -54,5 | -0,5 |
| | 320 / Anfang | -17,9 | -0,7 | 45,2 | 0,0 | 75,4 | 0,6 |
| CO11(6) | 111 / Ende | -6,3 | 0,0 | 18,3 | 0,0 | 0,0 | 0,0 |
| | 68 / Anfang | 759,3 | 3,6 | -20,8 | -0,1 | -19,0 | -10,2 |
| | 68 / Ende | -692,4 | -0,4 | 10,3 | 0,0 | 19,0 | 1,2 |
| | 145 / Ende | 17,2 | -1,0 | 25,5 | 0,0 | -42,5 | -0,6 |
| | 320 / Anfang | -17,6 | -1,0 | 23,1 | 0,0 | 33,4 | 0,5 |
| CO11(8) | 111 / Ende | -4,9 | 0,0 | 39,6 | 0,0 | 0,0 | 0,0 |
| | 68 / Anfang | 527,4 | 3,0 | -11,3 | 0,0 | -11,8 | -8,4 |
| | 68 / Ende | -406,6 | 2,2 | 4,0 | 0,0 | 11,8 | 6,0 |
| | 145 / Ende | 13,7 | -0,6 | 40,8 | 0,0 | -63,4 | -0,4 |
| | 320 / Anfang | -15,3 | -0,6 | 40,4 | 0,0 | 61,0 | 0,4 |
| CO11(10) | 111 / Ende | -2,9 | -0,1 | 39,6 | 0,0 | 0,0 | 0,0 |
| | 68 / Anfang | 613,5 | -2,8 | -1,1 | 0,0 | 5,2 | 5,6 |
| | 68 / Ende | -491,9 | 9,6 | 0,4 | 0,0 | -5,2 | 18,2 |
| | 145 / Ende | 8,5 | 0,0 | 37,4 | 0,0 | -51,3 | -0,1 |
| | 320 / Anfang | -9,9 | -0,1 | 44,6 | 0,0 | 75,0 | 0,1 |

### Fehlende Lasten

| Name | X [kN] | Y [kN] | Z [kN] | Mx [kNm] | My [kNm] | Mz [kNm] |
|---|---|---|---|---|---|---|
| CO11(35) | 7,3 | 0,1 | -0,1 | 6,8 | 0,0 | 0,0 |
| CO11(36) | -2,1 | 4,7 | 0,0 | 3,7 | 0,0 | 0,0 |
| CO11(37) | 2,7 | -2,4 | -0,1 | 3,5 | 0,0 | 0,0 |
| CO11(38) | 6,8 | 1,1 | 0,0 | 7,7 | 0,0 | 0,0 |
| CO11(39) | 4,1 | -2,2 | -0,1 | 6,8 | 0,0 | 0,0 |
| CO11(40) | 5,6 | 2,3 | 0,0 | 6,9 | 0,0 | 0,0 |
| CO11(41) | 3,7 | -1,1 | -0,1 | 7,8 | 0,0 | 0,0 |
| CO9(42) | -1,3 | -5,3 | 0,0 | -0,1 | 0,0 | 0,0 |
| CO11(43) | 5,6 | -0,3 | -0,1 | 3,5 | 0,0 | 0,0 |
| CO11(44) | 1,0 | 6,9 | 0,0 | 3,6 | 0,0 | 0,0 |
| CO11(45) | 7,3 | 0,2 | -0,1 | 6,8 | 0,0 | 0,0 |
| CO11(46) | -0,7 | 5,4 | 0,0 | 7,0 | 0,0 | 0,0 |
| CO11(47) | 3,9 | 5,4 | 0,0 | 7,0 | 0,0 | 0,0 |
| CO11(48) | 2,0 | 7,5 | 0,0 | 7,0 | 0,0 | 0,0 |
| CO11(30) | 4,2 | -2,0 | -0,1 | 6,8 | 0,0 | 0,0 |
| CO11(32) | 0,6 | 6,7 | 0,0 | 3,6 | 0,0 | 0,0 |
| CO11(13) | 6,8 | 1,0 | 0,0 | 6,8 | 0,0 | 0,0 |
| CO11(16) | -1,4 | 5,2 | 0,0 | 5,7 | 0,0 | 0,0 |
| CO11(17) | 3,4 | -2,3 | -0,1 | 5,6 | 0,0 | 0,0 |
| CO11(19) | -0,5 | 5,4 | 0,0 | 7,0 | 0,0 | 0,0 |
| CO11(21) | -0,5 | 5,5 | 0,0 | 7,0 | 0,0 | 0,0 |
| CO11(4) | 5,5 | 2,5 | 0,0 | 7,8 | 0,0 | 0,0 |
| CO11(5) | 6,8 | 0,9 | 0,0 | 7,7 | 0,0 | 0,0 |
| CO11(6) | 2,9 | -2,2 | -0,1 | 3,5 | 0,0 | 0,0 |
| CO11(8) | 3,5 | -1,2 | -0,1 | 7,8 | 0,0 | 0,0 |
| CO11(10) | 5,4 | 2,3 | 0,0 | 7,8 | 0,0 | 0,0 |

## Nachweis

### Übersicht

| Name | Wert | Nachweisstatus |
|---|---|---|
| Berechnung | 100,0% | OK |
| Platten | 2,6 < 5,0% | OK |
| Schrauben | 85,9 < 100% | OK |
| Schweißnähte | 97,4 < 100% | OK |
| Beulen | Nicht berechnet | |

## Platten

| Name | Material | $t_p$ [mm] | Lasten | $\sigma_{Ed}$ [MPa] | $\varepsilon_{Pl}$ [%] | $\sigma_{c,Ed}$ [MPa] | Status |
|---|---|---|---|---|---|---|---|
| 111-bfl 1 | S 355 | 8,0 | CO11(8) | 67,0 | 0,0 | 0,0 | OK |
| 111-tfl 1 | S 355 | 8,0 | CO11(8) | 63,0 | 0,0 | 0,0 | OK |
| 111-w 1 | S 355 | 5,3 | CO11(4) | 202,6 | 0,0 | 12,0 | OK |
| 68-bfl 1 | Baustahl S 355 | 17,5 | CO11(13) | 152,4 | 0,0 | 0,0 | OK |
| 68-tfl 1 | Baustahl S 355 | 17,5 | CO11(40) | 129,8 | 0,0 | 0,0 | OK |
| 68-w 1 | Baustahl S 355 | 10,0 | CO11(13) | 271,2 | 0,0 | 58,6 | OK |
| 145-bfl 1 | Baustahl S 355 | 9,8 | CO11(41) | 320,5 | 0,0 | 0,0 | OK |
| 145-tfl 1 | Baustahl S 355 | 9,8 | CO11(41) | 231,7 | 0,0 | 0,0 | OK |
| 145-w 1 | Baustahl S 355 | 6,2 | CO11(41) | 346,9 | 0,0 | 0,0 | OK |
| 320-bfl 1 | Baustahl S 355 | 9,8 | CO11(38) | 355,1 | 0,0 | 0,0 | OK |
| 320-tfl 1 | Baustahl S 355 | 9,8 | CO11(38) | 355,2 | 0,1 | 0,0 | OK |
| 320-w 1 | Baustahl S 355 | 6,2 | CO11(38) | 355,2 | 0,1 | 0,0 | OK |
| Fahnenblech1 | S 355 | 10,0 | CO11(38) | 262,4 | 0,0 | 21,9 | OK |
| Stirnblech1a | S 355 | 20,0 | CO11(41) | 354,2 | 0,0 | 53,3 | OK |
| Stirnblech1b | S 355 | 20,0 | CO11(38) | 355,1 | 0,1 | 59,6 | OK |
| Verstärkung1 | S 355 | 10,0 | CO11(41) | 262,9 | 0,0 | 0,0 | OK |
| Verstärkung2 | S 355 | 4,0 | CO11(4) | 360,4 | 2,6 | 0,0 | OK |
| Rippe1a | S 355 | 15,0 | CO9(42) | 144,6 | 0,0 | 0,0 | OK |
| Rippe1b | S 355 | 15,0 | CO9(42) | 144,7 | 0,0 | 0,0 | OK |
| Rippe1c | S 355 | 15,0 | CO9(42) | 151,2 | 0,0 | 0,0 | OK |
| Rippe1d | S 355 | 15,0 | CO9(42) | 150,9 | 0,0 | 0,0 | OK |

**Bemessungsdaten**

| Material | $f_y$ [MPa] | $\varepsilon_{lim}$ [%] |
|---|---|---|
| S 355 | 355,0 | 5,0 |
| Baustahl S 355 | 355,0 | 5,0 |

**Erläuterung von Symbolen**

| | |
|---|---|
| $t_p$ | Plattendicke |
| $\sigma_{Ed}$ | Vergleichsspannung |
| $\varepsilon_{Pl}$ | Plastische Dehnung |
| $\sigma_{c,Ed}$ | Kontaktspannung |
| $f_y$ | Streckgrenze |
| $\varepsilon_{lim}$ | Grenzwert plastische Dehnung |

*Gesamt, CO11(4)*

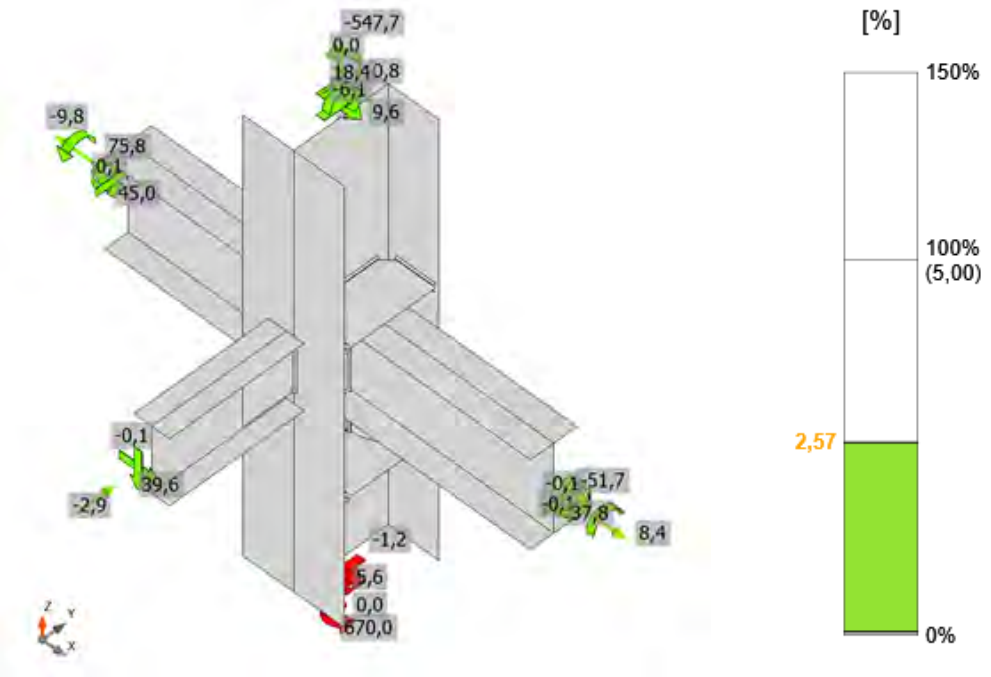


*Dehnung, CO11(4)*

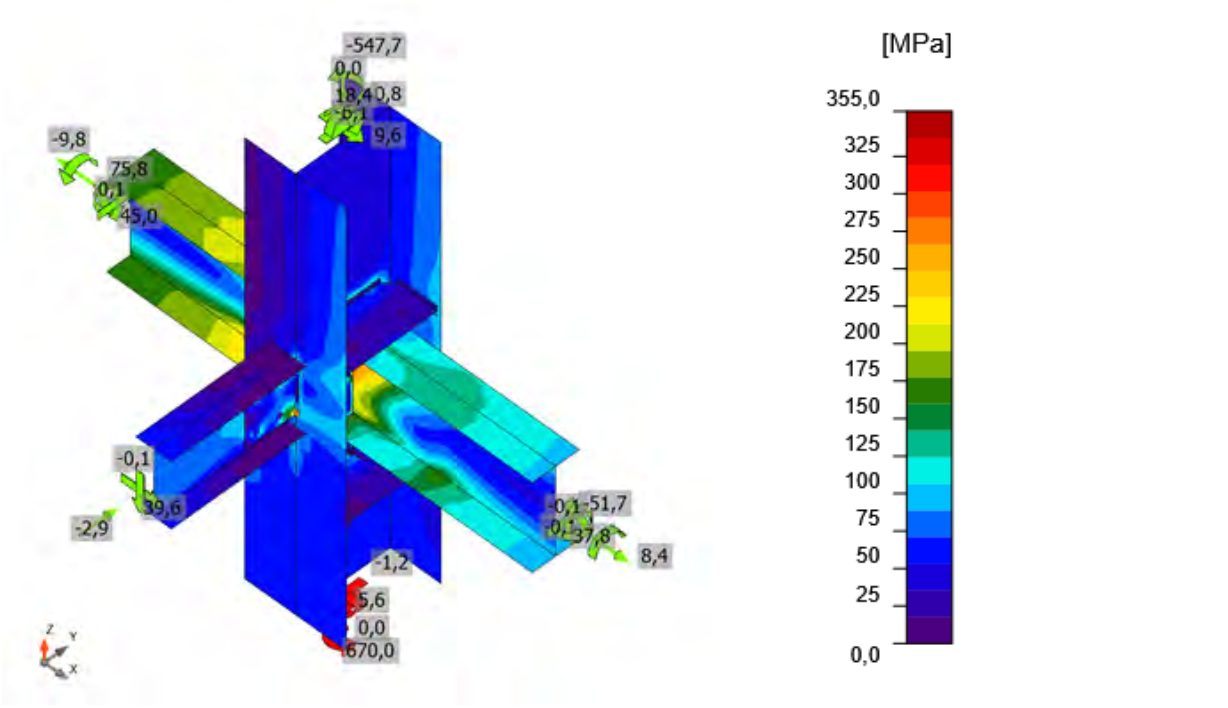


*Vergleichsspannung, CO11(4)*

## Schrauben

| Form | Position | Klasse | Lasten | $F_{t,Ed}$ [kN] | $F_{v,Ed}$ [kN] | $F_{b,Rd}$ [kN] | $Ut_t$ [%] | $Ut_s$ [%] | $Ut_{ts}$ [%] | Konstruktionsregeln | Status |
|---|---|---|---|---|---|---|---|---|---|---|---|
| 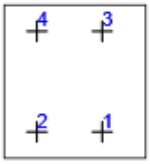 | B1 | M16 8.8 - 1 | CO11(38) | 1,7 | 10,9 | 67,3 | 1,8 | 18,2 | 19,5 | OK | OK |
| | B2 | M16 8.8 - 1 | CO11(38) | 2,5 | 17,6 | 56,7 | 2,8 | 31,0 | 31,1 | OK | OK |
| | B3 | M16 8.8 - 1 | CO11(4) | 4,0 | 9,0 | 46,2 | 4,4 | 19,5 | 18,1 | OK | OK |
| | B4 | M16 8.8 - 1 | CO11(4) | 1,8 | 16,9 | 61,6 | 2,0 | 28,1 | 29,5 | OK | OK |
| 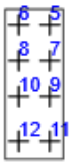 | B5 | M20 8.8 - 2 | CO11(38) | 120,8 | 1,4 | 153,9 | 85,6 | 1,5 | 62,6 | OK | OK |
| | B6 | M20 8.8 - 2 | CO11(38) | 121,3 | 2,0 | 158,9 | 85,9 | 2,1 | 63,5 | OK | OK |
| | B7 | M20 8.8 - 2 | CO11(38) | 86,2 | 5,6 | 196,0 | 61,1 | 6,0 | 49,6 | OK | OK |
| | B8 | M20 8.8 - 2 | CO11(38) | 88,0 | 5,4 | 196,0 | 62,4 | 5,7 | 50,3 | OK | OK |
| | B9 | M20 8.8 - 2 | CO11(38) | 5,6 | 8,7 | 196,0 | 4,0 | 9,3 | 12,1 | OK | OK |
| | B10 | M20 8.8 - 2 | CO11(38) | 5,7 | 8,7 | 196,0 | 4,1 | 9,3 | 12,2 | OK | OK |
| | B11 | M20 8.8 - 2 | CO9(42) | 35,7 | 6,3 | 354,2 | 25,3 | 6,7 | 24,8 | OK | OK |
| | B12 | M20 8.8 - 2 | CO9(42) | 35,9 | 6,2 | 171,4 | 25,4 | 6,6 | 24,7 | OK | OK |

**Bemessungsdaten**

| Klasse | $F_{t,Rd}$ [kN] | $B_{p,Rd}$ [kN] | $F_{v,Rd}$ [kN] |
|---|---|---|---|
| M16 8.8 - 1 | 90,4 | 99,4 | 60,3 |
| M20 8.8 - 2 | 141,1 | 469,4 | 94,1 |

**Erläuterung von Symbolen**

| | |
|---|---|
| $F_{t,Ed}$ | Zugkraft |
| $F_{v,Ed}$ | Resultierende der Schraubenscherkräfte Vy und Vz in Scherebenen |
| $F_{b,Rd}$ | Lochleibungstragfähigkeit der Platte nach EN 1993-1-8 Tab. 3.4 |
| $Ut_t$ | Ausnutzung unter Zug |
| $Ut_s$ | Ausnutzung unter Schub |
| $Ut_{ts}$ | Interaktion von Zug und Schub EN_1993-1-8 Tabelle 3.4 |
| $F_{t,Rd}$ | Zugtragfähigkeit der Schraube nach EN 1993-1-8 Tabelle 3.4 |
| $B_{p,Rd}$ | Durchstanztragfähigkeit nach EN 1993-1-8 Tabelle 3.4 |
| $F_{v,Rd}$ | Schertragfähigkeit der Schraube nach EN 1993-1-8 Tabelle 3.4 |

## Schweißnähte

| Position | Kante | $T_w$ [mm] | L [mm] | Lasten | $\sigma_{w,Ed}$ [MPa] | $\varepsilon_{Pl}$ [%] | $\sigma_{\perp}$ [MPa] | $\tau_{\perp}$ [MPa] | $\tau_{\parallel}$ [MPa] | Ut [%] | $Ut_c$ [%] | Konstruktionsregeln | Status |
|---|---|---|---|---|---|---|---|---|---|---|---|---|---|
| 68-bfl 1 | Fahnenblech1 | ◢ 6,0 ◣ | 139 | CO11(38) | 297,0 | 0,0 | -123,9 | -113,6 | -106,7 | 68,2 | 41,7 | OK | OK |
| | | ◢ 6,0 ◣ | 138 | CO11(38) | 285,4 | 0,0 | -101,2 | 111,6 | 106,3 | 65,5 | 43,3 | OK | OK |
| Stirnblech1a | 145-bfl 1 | ◢ 6,0 ◣ | 120 | CO11(41) | 232,4 | 0,0 | 133,5 | 74,4 | 80,8 | 53,4 | 43,7 | OK | OK |
| | | ◢ 6,0 ◣ | 120 | CO9(42) | 267,1 | 0,0 | -145,2 | -102,7 | -78,7 | 61,3 | 48,5 | OK | OK |
| Stirnblech1a | 145-tfl 1 | ◢ 6,0 ◣ | 120 | CO11(38) | 195,6 | 0,0 | -94,3 | -87,1 | 47,0 | 44,9 | 37,8 | OK | OK |
| | | ◢ 6,0 ◣ | 120 | CO11(38) | 159,0 | 0,0 | -69,0 | 76,1 | -32,3 | 36,5 | 30,0 | OK | OK |
| Stirnblech1a | 145-w 1 | ◢ 6,0 ◣ | 229 | CO11(41) | 249,7 | 0,0 | 123,2 | 117,9 | -42,8 | 57,3 | 38,0 | OK | OK |
| | | ◢ 6,0 ◣ | 229 | CO11(41) | 252,5 | 0,0 | 118,0 | -123,3 | 37,5 | 58,0 | 37,2 | OK | OK |
| Stirnblech1b | 320-bfl 1 | ◢ 6,0 ◣ | 120 | CO11(38) | 270,8 | 0,0 | 159,0 | 83,4 | -95,2 | 62,2 | 49,7 | OK | OK |
| | | ◢ 6,0 ◣ | 120 | CO11(38) | 152,8 | 0,0 | 15,7 | 15,4 | -86,4 | 35,1 | 28,9 | OK | OK |
| Stirnblech1b | 320-tfl 1 | ◢ 6,0 ◣ | 119 | CO11(38) | 424,0 | 0,0 | -292,5 | -177,2 | -0,6 | 97,4 | 75,7 | OK | OK |
| | | ◢ 6,0 ◣ | 119 | CO11(38) | 299,9 | 0,0 | -54,9 | 170,1 | -5,7 | 68,9 | 49,9 | OK | OK |
| Stirnblech1b | 320-w 1 | ◢ 6,0 ◣ | 229 | CO11(38) | 300,9 | 0,0 | 151,2 | 150,2 | 1,3 | 69,1 | 43,5 | OK | OK |
| | | ◢ 6,0 ◣ | 229 | CO11(38) | 303,2 | 0,0 | 150,6 | -151,8 | 4,8 | 69,6 | 43,8 | OK | OK |
| Stirnblech1a | Verstärkung1 | ◢ 6,0 ◣ | 99 | CO11(30) | 317,1 | 0,0 | -153,4 | -150,6 | 54,8 | 72,8 | 50,2 | OK | OK |
| | | ◢ 6,0 ◣ | 99 | CO11(30) | 319,9 | 0,0 | -150,3 | 153,0 | -56,4 | 73,5 | 50,5 | OK | OK |
| 145-tfl 1 | Verstärkung1 | ◢ 6,0 ◣ | 219 | CO11(41) | 322,0 | 0,0 | -89,0 | -89,8 | -154,5 | 73,9 | 45,2 | OK | OK |
| | | ◢ 6,0 ◣ | 219 | CO11(41) | 323,6 | 0,0 | -89,9 | 89,2 | 155,7 | 74,3 | 45,4 | OK | OK |
| Stirnblech1b | Verstärkung2 | ◢ 6,0 ◣ | 100 | CO11(4) | 412,4 | 0,0 | -180,6 | -179,3 | 117,0 | 94,7 | 56,6 | OK | OK |

| Position | Kante | $T_w$ [mm] | L [mm] | Lasten | $\sigma_{w,Ed}$ [MPa] | $\varepsilon_{Pl}$ [%] | $\sigma_{\perp}$ [MPa] | $\tau_{\perp}$ [MPa] | $\tau_{\parallel}$ [MPa] | Ut [%] | $Ut_c$ [%] | Konstruktionsregeln | Status |
|---|---|---|---|---|---|---|---|---|---|---|---|---|---|
| | | ◢ 6,0 ◣ | 100 | CO11(4) | 413,2 | 0,0 | -180,0 | 181,5 | -114,8 | 94,9 | 56,6 | OK | OK |
| 320-tfl 1 | Verstärkung2 | ◢ 6,0 ◣ | 219 | CO11(38) | 201,9 | 0,0 | -57,1 | -56,7 | -96,4 | 46,4 | 37,1 | OK | OK |
| | | ◢ 6,0 ◣ | 219 | CO11(4) | 202,1 | 0,0 | -57,1 | 56,9 | 96,4 | 46,4 | 37,0 | OK | OK |
| 68-bfl 1 | Rippe1a | ◢ 6,0 ◣ | 101 | CO9(42) | 66,1 | 0,0 | 28,0 | 4,0 | -34,3 | 15,2 | 11,2 | OK | OK |
| | | ◢ 6,0 ◣ | 101 | CO9(42) | 75,7 | 0,0 | -30,2 | 6,2 | 39,6 | 17,4 | 13,0 | OK | OK |
| 68-w 1 | Rippe1a | ◢ 6,0 ◣ | 177 | CO9(42) | 52,6 | 0,0 | -13,8 | -26,0 | -13,5 | 12,1 | 9,9 | OK | OK |
| | | ◢ 6,0 ◣ | 176 | CO9(42) | 153,3 | 0,0 | 47,1 | -57,5 | -61,6 | 35,2 | 29,6 | OK | OK |
| 68-tfl 1 | Rippe1a | ◢ 6,0 ◣ | 101 | CO9(42) | 79,6 | 0,0 | 27,1 | 1,6 | 43,2 | 18,3 | 10,5 | OK | OK |
| | | ◢ 6,0 ◣ | 101 | CO9(42) | 94,8 | 0,0 | -39,1 | 13,6 | -48,0 | 21,8 | 12,9 | OK | OK |
| 68-bfl 1 | Rippe1b | ◢ 6,0 ◣ | 101 | CO9(42) | 94,9 | 0,0 | 40,4 | 14,0 | 47,6 | 21,8 | 14,5 | OK | OK |
| | | ◢ 6,0 ◣ | 101 | CO9(42) | 80,7 | 0,0 | -27,2 | 0,9 | -43,9 | 18,5 | 12,5 | OK | OK |
| 68-w 1 | Rippe1b | ◢ 6,0 ◣ | 176 | CO9(42) | 152,5 | 0,0 | -36,2 | -50,8 | 68,7 | 35,0 | 29,9 | OK | OK |
| | | ◢ 6,0 ◣ | 177 | CO11(40) | 55,5 | 0,0 | 23,4 | -26,1 | -12,8 | 12,7 | 10,0 | OK | OK |
| 68-tfl 1 | Rippe1b | ◢ 6,0 ◣ | 101 | CO9(42) | 78,7 | 0,0 | 28,6 | 6,3 | -41,9 | 18,1 | 12,2 | OK | OK |
| | | ◢ 6,0 ◣ | 101 | CO9(42) | 68,4 | 0,0 | -26,1 | 3,8 | 36,3 | 15,7 | 10,1 | OK | OK |
| 68-bfl 1 | Rippe1c | ◢ 6,0 ◣ | 101 | CO11(13) | 81,8 | 0,0 | 30,0 | 18,6 | 39,8 | 18,8 | 12,3 | OK | OK |
| | | ◢ 6,0 ◣ | 101 | CO11(13) | 63,6 | 0,0 | 3,1 | -14,5 | -33,7 | 14,6 | 9,9 | OK | OK |
| 68-w 1 | Rippe1c | ◢ 6,0 ◣ | 176 | CO9(42) | 154,7 | 0,0 | -82,7 | -57,4 | -49,0 | 35,5 | 26,9 | OK | OK |
| | | ◢ 6,0 ◣ | 177 | CO11(13) | 56,3 | 0,0 | 12,6 | -26,4 | 17,5 | 12,9 | 9,8 | OK | OK |
| 68-tfl 1 | Rippe1c | ◢ 6,0 ◣ | 101 | CO11(40) | 79,6 | 0,0 | 33,7 | 20,4 | -36,3 | 18,3 | 10,0 | OK | OK |

| Position | Kante | $T_w$ [mm] | L [mm] | Lasten | $\sigma_{w,Ed}$ [MPa] | $\varepsilon_{Pl}$ [%] | $\sigma_{\perp}$ [MPa] | $\tau_{\perp}$ [MPa] | $\tau_{\parallel}$ [MPa] | Ut [%] | $Ut_c$ [%] | Konstruktionsregeln | Status |
|---|---|---|---|---|---|---|---|---|---|---|---|---|---|
| | | ◢ 6,0 ◣ | 101 | CO11(40) | 59,8 | 0,0 | -4,4 | -8,9 | 33,3 | 13,7 | 8,6 | OK | OK |
| 68-bfl 1 | Rippe1d | ◢ 6,0 ◣ | 101 | CO9(42) | 57,7 | 0,0 | 30,1 | 11,3 | -26,1 | 13,3 | 11,3 | OK | OK |
| | | ◢ 6,0 ◣ | 101 | CO9(42) | 58,3 | 0,0 | -30,2 | 11,4 | 26,5 | 13,4 | 11,5 | OK | OK |
| 68-w 1 | Rippe1d | ◢ 6,0 ◣ | 176 | CO9(42) | 48,4 | 0,0 | -3,3 | -27,6 | -3,9 | 11,1 | 10,1 | OK | OK |
| | | ◢ 6,0 ◣ | 176 | CO9(42) | 158,9 | 0,0 | 85,3 | -59,1 | -50,0 | 36,5 | 27,1 | OK | OK |
| 68-tfl 1 | Rippe1d | ◢ 6,0 ◣ | 101 | CO9(42) | 59,0 | 0,0 | 17,7 | 2,8 | 32,4 | 13,6 | 9,2 | OK | OK |
| | | ◢ 6,0 ◣ | 101 | CO9(42) | 69,6 | 0,0 | -28,9 | 14,1 | -33,7 | 16,0 | 10,4 | OK | OK |

**Bemessungsdaten**

| Material | $f_u$ [MPa] | $\beta_w$ [-] | $\sigma_{w,Rd}$ [MPa] | 0.9 σ [MPa] |
|---|---|---|---|---|
| S 355 | 490,0 | 0,90 | 435,6 | 352,8 |

**Erläuterung von Symbolen**

| | |
|---|---|
| $T_w$ | Nahtdicke a |
| L | Länge |
| $\sigma_{w,Ed}$ | Vergleichsspannung |
| $\varepsilon_{Pl}$ | Dehnung |
| $\sigma_{\perp}$ | Senkrechte Spannung |
| $\tau_{\perp}$ | Scherspannung senkrecht zur Schweißnahtachse |
| $\tau_{\parallel}$ | Scherspannung parallel zur Schweißnahtachse |
| Ut | Ausnutzung |
| $Ut_c$ | Schätzung der Schweißnahtkapazität |
| ◢ | Kehlnaht |
| $f_u$ | Grenzfestigkeit der Schweißnaht |
| $\beta_w$ | Korrelationsfaktor nach EN 1993-1-8 Tab. 4.1 |
| $\sigma_{w,Rd}$ | Tragfähigkeit der Schweißnaht |
| 0.9 σ | Senkrechter Spannungswiderstand - 0.9*fu / γM2 |

## Beulen

**Die Beulanalyse wurde nicht berechnet.**

## Normeinstellungen

| Position | Wert | Einheit | Bezug |
|---|---|---|---|
| Sicherheitsfaktor $\gamma_{M0}$ | 1,00 | - | EN 1993-1-1 – 6.1 |
| Sicherheitsfaktor $\gamma_{M1}$ | 1,00 | - | EN 1993-1-1 – 6.1 |
| Sicherheitsfaktor $\gamma_{M2}$ | 1,25 | - | EN 1993-1-1 – 6.1 |
| Sicherheitsfaktor $\gamma_{M3}$ | 1,25 | - | EN 1993-1-8 – Table 2.1 |
| Sicherheitsfaktor $\gamma_{C}$ | 1,50 | - | EN 1992-1-1 – 2.4.2.4 |
| Sicherheitsfaktor $\gamma_{Inst}$ | 1,20 | - | EN 1992-4 – Table 4.1 |
| Verbindungskoeffizient βj | 0,67 | - | EN 1993-1-8 – 6.2.5(7) |
| Wirksame Fläche - Einfluss der Netzgröße | 0,10 | - | |
| Reibungsbeiwert - Beton | 0,25 | - | EN 1993-1-8 |
| Reibungskoeffizient bei gleitfesten Verbindungen | 0,30 | - | EN 1993-1-8 – Table 3.7 |
| Plastische Dehnung - Grenzwert | 0,05 | - | EN 1993-1-5 |
| Konstruktionsregeln | Ja | | |
| Distance between bolts [d0] | 2,20 | - | EN 1993-1-8 – Table 3.3 |
| Distance between bolts and edge [d0] | 1,20 | - | EN 1993-1-8 – Table 3.3 |
| Nachweis der Tragfähigkeit bei Betonausbruch | Beide | | |
| Berechnetes αb für Lochleibungsnachweis anwenden. | Ja | | EN 1993-1-8 – Table 3.4 |
| Gerissener Beton | Ja | | EN 1992-4 |
| Überprüfen der lokalen Verformung | Ja | | |
| Lokale Verformung - Grenzwert | 0,03 | - | CIDECT DG 1, 3 – 1.1 |
| Geometrische Nichtlinearität (GMNA) | Ja | | Analyse mit großen Verformungen für Verbindungen mit Hohlprofilen |
| Ausgesteiftes System | Nein | | EN 1993-1-8 – 5.2.2.5 |

# DETAJLI NA OKVIRJU Gj-1/Z0

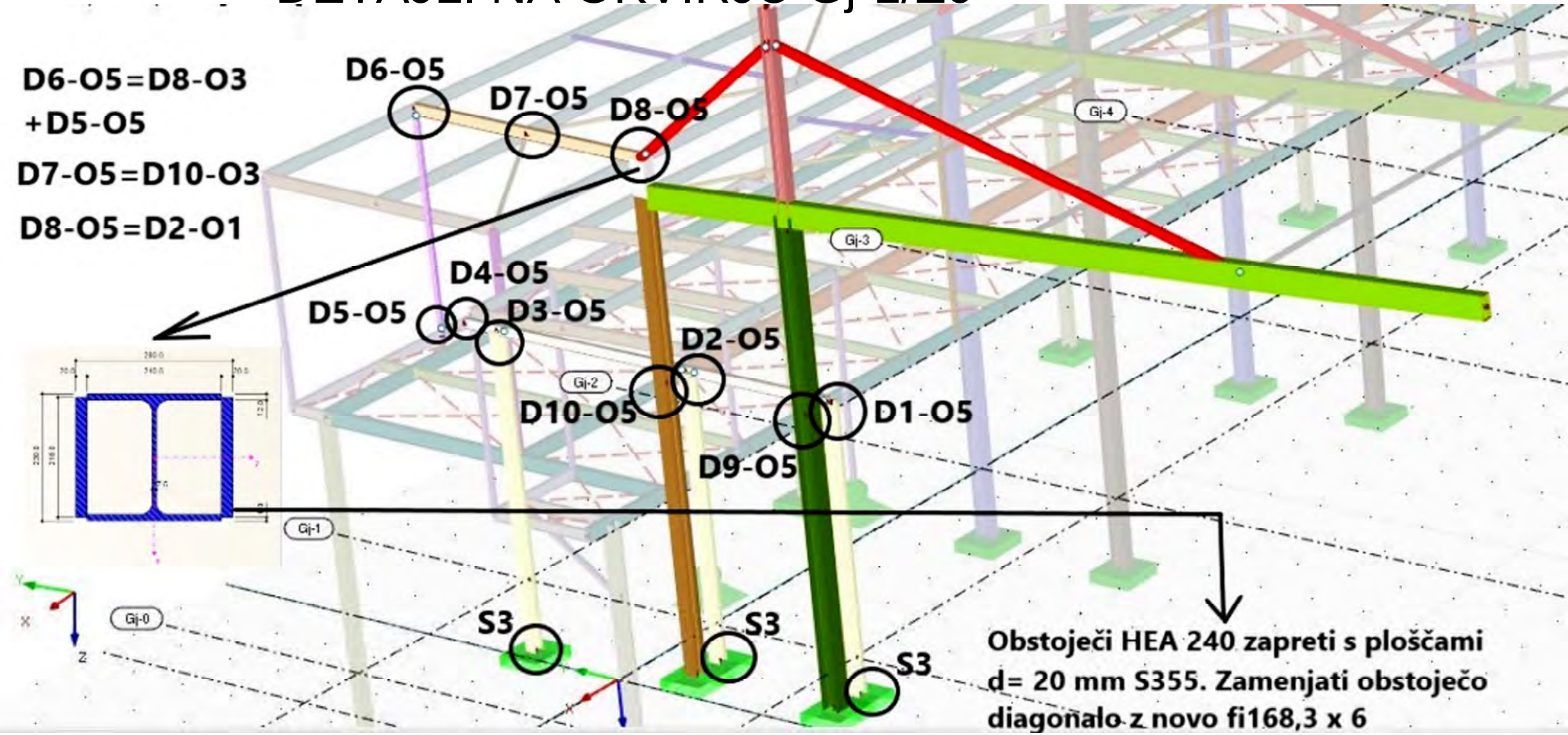

## Projektdaten

| | |
|---|---|
| Projektname | IdeaStatiCa-Stadion_Fazanerija_JK-6_BR - 78 |
| Projektnummer | Detajl D1-O5 |
| Autor | mag. Igor Gorup dipl. ing. |
| Beschreibung | |
| Datum | 18.06.2025 |
| Norm | EN |

## Material

| | |
|---|---|
| Stahl | Baustahl S 355, Baustahl S 235, S 355 |

# Projektposition 78

## Bemessung

| | |
|---|---|
| Name | 78 |
| Beschreibung | |
| Berechnung | Spannung, Dehnung/ Lasten im Gleichgewicht |

### Bauteile

#### Geometrie

| Name | Querschnitt | β – Rotation [°] | Y - Rotation [°] | α - Rotation [°] | Abstand ex [mm] | Abstand ey [mm] | Abstand ez [mm] |
|---|---|---|---|---|---|---|---|
| 136 | 697 - IPE180 | -90,0 | 0,0 | -180,0 | 0 | 0 | -30 |
| 50 | 24 - IPE240 | 0,0 | 0,0 | -180,0 | 0 | 0 | 0 |
| 139 | 12 - HEA200 | 0,0 | 90,0 | -180,0 | 0 | 0 | 0 |

#### Auflager und Kräfte

| Name | Auflager | Kräfte in | X [mm] |
|---|---|---|---|
| 136 / ende | Mx-My-Mz | Schrauben | 69 |
| 50 / anfang | | Position | 0 |
| 50 / ende | | Position | 0 |
| 139 / anfang | N-Vy-Vz-Mx-My-Mz | Position | 0 |

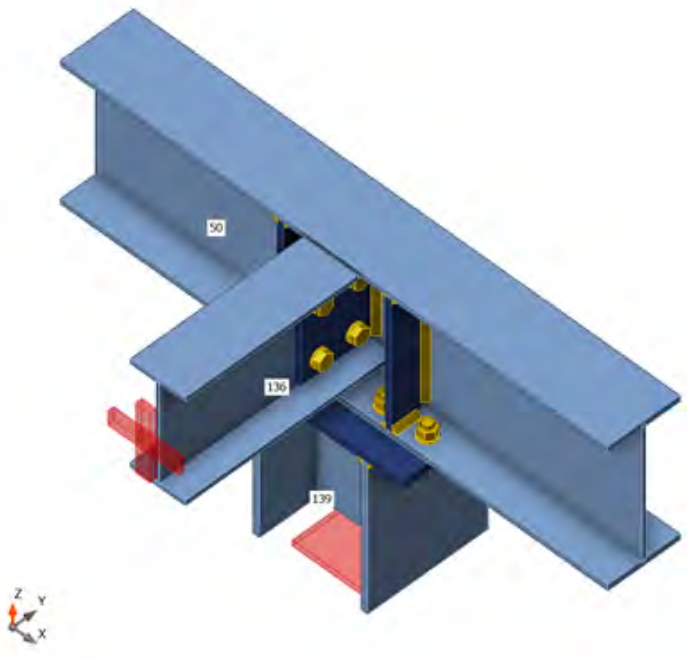


### Querschnitte

| Name | Material |
|---|---|
| 697 - IPE180 | S 355 |
| 24 - IPE240 | Baustahl S 355 |
| 12 - HEA200 | Baustahl S 355 |

## Schrauben

| Name | Durchmesser [mm] | $f_y$ [MPa] | $f_u$ [MPa] | Bruttofläche [$mm^2$] |
|---|---|---|---|---|
| M16 8.8 | 16 | 640,0 | 800,0 | 201 |

## Lasteinwirkungen (Kräfte im Gleichgewicht)

| Name | Bauteil | N [kN] | Vy [kN] | Vz [kN] | Mx [kNm] | My [kNm] | Mz [kNm] |
|---|---|---|---|---|---|---|---|
| CO11(24) | 136 / Ende | -1,3 | 0,0 | 27,6 | 0,0 | 0,0 | 0,0 |
| | 50 / Anfang | -6,9 | 0,4 | 42,5 | 0,1 | 56,1 | -1,1 |
| | 50 / Ende | 4,4 | 6,8 | 127,4 | -0,1 | -61,9 | 1,1 |
| | 139 / Anfang | 197,4 | 1,9 | 2,7 | 0,0 | 5,8 | 0,0 |
| CO9(25) | 136 / Ende | 2,5 | 0,0 | 0,0 | 0,0 | 0,0 | 0,0 |
| | 50 / Anfang | 19,0 | 1,9 | 6,3 | 0,0 | 19,5 | -2,9 |
| | 50 / Ende | -17,6 | 14,6 | -114,8 | 0,0 | 15,7 | 2,9 |
| | 139 / Anfang | -108,5 | 1,0 | -15,5 | 0,0 | -35,2 | 0,0 |
| CO11(26) | 136 / Ende | 3,3 | 0,0 | 14,4 | 0,0 | 0,0 | 0,0 |
| | 50 / Anfang | 12,0 | -0,6 | 16,2 | -0,1 | 17,8 | 2,7 |
| | 50 / Ende | 0,2 | -16,0 | -43,4 | 0,0 | -9,9 | -2,8 |
| | 139 / Anfang | -13,1 | -2,5 | -2,7 | -0,1 | -7,9 | 0,1 |
| CO11(27) | 136 / Ende | -1,5 | 0,0 | 14,4 | 0,0 | 0,0 | 0,0 |
| | 50 / Anfang | -4,8 | 1,2 | 25,0 | 0,1 | 34,8 | -2,5 |
| | 50 / Ende | 3,6 | 13,8 | 30,1 | -0,1 | -29,3 | 2,5 |
| | 139 / Anfang | 69,3 | 1,8 | -2,1 | 0,1 | -5,5 | -0,1 |
| CO11(28) | 136 / Ende | -3,2 | 0,0 | 14,4 | 0,0 | 0,0 | 0,0 |
| | 50 / Anfang | -14,9 | 1,1 | 25,1 | 0,1 | 32,4 | -2,3 |
| | 50 / Ende | 7,8 | 12,3 | 111,6 | -0,1 | -42,3 | 2,2 |
| | 139 / Anfang | 151,0 | 2,6 | 4,2 | -0,1 | 9,9 | 0,0 |
| CO11(29) | 136 / Ende | 2,6 | 0,1 | 27,6 | 0,0 | 0,0 | 0,0 |
| | 50 / Anfang | 6,2 | -0,8 | 31,8 | -0,1 | 34,9 | 3,1 |
| | 50 / Ende | 3,4 | -17,7 | 33,8 | 0,1 | -37,2 | -3,1 |
| | 139 / Anfang | 93,0 | -2,4 | 2,1 | 0,0 | 2,2 | 0,0 |
| CO11(30) | 136 / Ende | 4,1 | 0,0 | 27,5 | 0,0 | 0,0 | 0,0 |
| | 50 / Anfang | 15,4 | -0,6 | 31,6 | -0,1 | 37,1 | 2,7 |
| | 50 / Ende | -0,2 | -17,2 | -40,2 | 0,0 | -25,1 | -2,9 |
| | 139 / Anfang | 18,8 | -2,7 | -4,0 | -0,2 | -12,0 | 0,1 |
| CO11(31) | 136 / Ende | 4,3 | 0,0 | 27,5 | 0,0 | 0,0 | 0,0 |
| | 50 / Anfang | 16,2 | -0,6 | 34,5 | -0,1 | 43,0 | 2,8 |
| | 50 / Ende | -1,3 | -17,6 | -18,4 | 0,0 | -31,9 | -2,9 |
| | 139 / Anfang | 43,4 | -2,8 | -3,8 | -0,1 | -11,1 | 0,1 |
| CO11(32) | 136 / Ende | -2,6 | 0,0 | 27,6 | 0,0 | 0,0 | 0,0 |
| | 50 / Anfang | -12,4 | 1,0 | 40,5 | 0,1 | 51,5 | -2,2 |
| | 50 / Ende | 7,7 | 12,8 | 116,4 | -0,1 | -57,8 | 2,1 |
| | 139 / Anfang | 184,3 | 2,7 | 3,2 | -0,1 | 6,4 | 0,0 |
| CO11(33) | 136 / Ende | -0,8 | 0,0 | 27,6 | 0,0 | 0,0 | 0,0 |
| | 50 / Anfang | -1,8 | 1,1 | 40,4 | 0,2 | 54,2 | -2,4 |
| | 50 / Ende | 3,2 | 14,1 | 33,3 | -0,1 | -44,5 | 2,5 |
| | 139 / Anfang | 101,1 | 1,8 | -3,4 | 0,1 | -9,6 | -0,1 |
| CO11(13) | 136 / Ende | 2,1 | 0,0 | 19,4 | 0,0 | 0,0 | 0,0 |
| | 50 / Anfang | 4,4 | -0,9 | 24,0 | -0,1 | 25,5 | 3,1 |
| | 50 / Ende | 3,5 | -17,3 | 35,3 | 0,1 | -29,9 | -3,1 |
| | 139 / Anfang | 78,6 | -2,2 | 2,7 | 0,0 | 4,4 | 0,0 |
| CO11(14) | 136 / Ende | -1,1 | 0,0 | 22,5 | 0,0 | 0,0 | 0,0 |
| | 50 / Anfang | -3,1 | 1,2 | 32,9 | 0,1 | 44,4 | -2,5 |
| | 50 / Ende | 3,4 | 14,3 | 28,1 | -0,1 | -36,5 | 2,6 |

| Name | Bauteil | N [kN] | Vy [kN] | Vz [kN] | Mx [kNm] | My [kNm] | Mz [kNm] |
|---|---|---|---|---|---|---|---|
| | 139 / Anfang | 83,4 | 1,8 | -2,9 | 0,1 | -7,9 | -0,1 |
| CO11(15) | 136 / Ende | 0,7 | 0,0 | 31,1 | 0,0 | 0,0 | 0,0 |
| | 50 / Anfang | 4,8 | 0,6 | 45,9 | 0,1 | 63,2 | -1,4 |
| | 50 / Ende | -0,3 | 8,0 | 41,7 | -0,1 | -51,5 | 1,4 |
| | 139 / Anfang | 118,6 | 1,0 | -4,4 | 0,1 | -11,7 | 0,0 |
| CO11(16) | 136 / Ende | -2,6 | 0,0 | 27,6 | 0,0 | 0,0 | 0,0 |
| | 50 / Anfang | -12,2 | 1,0 | 37,7 | 0,1 | 45,8 | -2,3 |
| | 50 / Ende | 8,2 | 13,2 | 87,6 | -0,1 | -50,0 | 2,3 |
| | 139 / Anfang | 152,7 | 2,5 | 2,6 | 0,0 | 4,3 | 0,0 |
| CO11(18) | 136 / Ende | 2,0 | 0,1 | 31,0 | 0,0 | 0,0 | 0,0 |
| | 50 / Anfang | 4,9 | -0,5 | 35,1 | -0,1 | 38,9 | 1,9 |
| | 50 / Ende | 3,3 | -11,0 | 23,4 | 0,1 | -37,6 | -1,9 |
| | 139 / Anfang | 89,5 | -1,4 | 0,8 | 0,0 | -1,2 | 0,0 |
| CO11(20) | 136 / Ende | 1,8 | 0,0 | 14,4 | 0,0 | 0,0 | 0,0 |
| | 50 / Anfang | 3,1 | -0,8 | 16,5 | -0,1 | 15,9 | 3,1 |
| | 50 / Ende | 3,6 | -16,7 | 29,3 | 0,0 | -21,7 | -3,0 |
| | 139 / Anfang | 60,0 | -2,1 | 3,2 | 0,0 | 5,9 | 0,0 |
| CO11(21) | 136 / Ende | -0,8 | 0,0 | 27,6 | 0,0 | 0,0 | 0,0 |
| | 50 / Anfang | -1,6 | 1,1 | 43,4 | 0,2 | 60,2 | -2,3 |
| | 50 / Ende | 2,4 | 13,8 | 59,4 | -0,1 | -52,1 | 2,4 |
| | 139 / Anfang | 130,2 | 2,0 | -3,1 | 0,1 | -8,2 | -0,1 |
| CO11(23) | 136 / Ende | 0,6 | 0,0 | 27,6 | 0,0 | 0,0 | 0,0 |
| | 50 / Anfang | 4,3 | 0,6 | 45,5 | 0,1 | 65,2 | -1,3 |
| | 50 / Ende | -1,0 | 7,7 | 68,3 | -0,1 | -56,0 | 1,3 |
| | 139 / Anfang | 141,3 | 1,1 | -3,8 | 0,0 | -9,3 | 0,0 |
| CO11(4) | 136 / Ende | 2,2 | 0,0 | 19,4 | 0,0 | 0,0 | 0,0 |
| | 50 / Anfang | 10,8 | -0,1 | 36,4 | 0,0 | 53,9 | 0,2 |
| | 50 / Ende | -4,5 | -1,3 | 45,6 | 0,0 | -43,4 | -0,2 |
| | 139 / Anfang | 101,4 | -0,2 | -4,5 | 0,0 | -10,5 | 0,0 |
| CO11(5) | 136 / Ende | -1,1 | 0,0 | 31,1 | 0,0 | 0,0 | 0,0 |
| | 50 / Anfang | -5,9 | 0,5 | 40,3 | 0,1 | 48,7 | -1,3 |
| | 50 / Ende | 5,6 | 7,5 | 69,8 | 0,0 | -49,5 | 1,3 |
| | 139 / Anfang | 141,1 | 1,5 | 1,3 | 0,0 | 0,8 | 0,0 |
| CO11(8) | 136 / Ende | 2,7 | 0,0 | 27,6 | 0,0 | 0,0 | 0,0 |
| | 50 / Anfang | 13,3 | -0,2 | 44,0 | 0,0 | 62,9 | 0,3 |
| | 50 / Ende | -5,1 | -2,1 | 36,0 | 0,0 | -49,2 | -0,3 |
| | 139 / Anfang | 107,6 | -0,4 | -5,5 | 0,0 | -13,7 | 0,0 |
| CO11(10) | 136 / Ende | -1,1 | 0,0 | 31,1 | 0,0 | 0,0 | 0,0 |
| | 50 / Anfang | -6,0 | 0,5 | 43,1 | 0,1 | 54,5 | -1,2 |
| | 50 / Ende | 5,0 | 7,2 | 98,1 | -0,1 | -57,2 | 1,2 |
| | 139 / Anfang | 172,1 | 1,7 | 1,8 | 0,0 | 2,7 | 0,0 |

### Fehlende Lasten

| Name | X [kN] | Y [kN] | Z [kN] | Mx [kNm] | My [kNm] | Mz [kNm] |
|---|---|---|---|---|---|---|
| CO11(24) | 0,2 | -7,8 | -0,1 | 1,9 | 0,0 | 0,0 |
| CO9(25) | -14,2 | -20,0 | 0,0 | 0,1 | 0,0 | 0,0 |
| CO11(26) | 9,5 | 15,8 | -0,2 | 1,1 | 0,0 | 0,0 |
| CO11(27) | -3,3 | -15,2 | -0,2 | 0,9 | 0,0 | 0,0 |
| CO11(28) | -3,0 | -12,8 | -0,2 | 0,9 | 0,0 | 0,0 |
| CO11(29) | 11,6 | 18,3 | -0,1 | 2,0 | 0,0 | 0,0 |
| CO11(30) | 11,2 | 16,3 | -0,2 | 2,0 | 0,0 | 0,0 |
| CO11(31) | 11,1 | 16,6 | -0,2 | 2,0 | 0,0 | 0,0 |
| CO11(32) | -1,6 | -13,9 | -0,2 | 1,8 | 0,0 | 0,0 |
| CO11(33) | -2,0 | -16,2 | -0,2 | 1,9 | 0,0 | 0,0 |
| CO11(13) | 10,6 | 18,3 | -0,1 | 1,4 | 0,0 | 0,0 |
| CO11(14) | -2,5 | -16,1 | -0,2 | 1,5 | 0,0 | 0,0 |
| CO11(15) | 0,1 | -10,4 | -0,1 | 2,2 | 0,0 | 0,0 |
| CO11(16) | -1,4 | -14,1 | -0,2 | 1,8 | 0,0 | 0,0 |
| CO11(18) | 8,9 | 11,0 | 0,0 | 2,2 | 0,0 | 0,0 |
| CO11(20) | 9,9 | 17,9 | -0,1 | 1,0 | 0,0 | 0,0 |
| CO11(21) | -2,2 | -16,1 | -0,2 | 1,9 | 0,0 | 0,0 |
| CO11(23) | -0,4 | -10,1 | -0,1 | 1,9 | 0,0 | 0,0 |
| CO11(4) | 1,9 | -0,5 | 0,0 | 1,4 | 0,0 | 0,0 |
| CO11(5) | 1,0 | -8,5 | -0,1 | 2,1 | 0,0 | 0,0 |
| CO11(8) | 2,7 | -0,1 | 0,0 | 2,0 | 0,0 | 0,0 |
| CO11(10) | 0,8 | -8,3 | -0,1 | 2,1 | 0,0 | 0,0 |

## Nachweis

### Übersicht

| Name | Wert | Nachweisstatus |
|---|---|---|
| Berechnung | 100,0% | OK |
| Platten | 0,2 < 5,0% | OK |
| Schrauben | 80,8 < 100% | OK |
| Schweißnähte | 87,5 < 100% | OK |
| Beulen | Nicht berechnet | |

## Platten

| Name | Material | $t_p$ [mm] | Lasten | $\sigma_{Ed}$ [MPa] | $\varepsilon_{Pl}$ [%] | $\sigma_{c,Ed}$ [MPa] | Status |
|---|---|---|---|---|---|---|---|
| 136-bfl 1 | S 355 | 8,0 | CO11(15) | 66,3 | 0,0 | 0,0 | OK |
| 136-tfl 1 | S 355 | 8,0 | CO11(15) | 66,1 | 0,0 | 0,0 | OK |
| 136-w 1 | S 355 | 5,3 | CO11(18) | 125,9 | 0,0 | 8,7 | OK |
| 50-bfl 1 | Baustahl S 355 | 9,8 | CO11(21) | 242,1 | 0,0 | 0,0 | OK |
| 50-tfl 1 | Baustahl S 355 | 9,8 | CO9(25) | 355,5 | 0,2 | 46,9 | OK |
| 50-w 1 | Baustahl S 355 | 6,2 | CO11(29) | 355,2 | 0,1 | 0,0 | OK |
| 139-bfl 1 | Baustahl S 355 | 10,0 | CO9(25) | 225,3 | 0,0 | 0,0 | OK |
| 139-tfl 1 | Baustahl S 355 | 10,0 | CO9(25) | 337,3 | 0,0 | 0,0 | OK |
| 139-w 1 | Baustahl S 355 | 6,5 | CO9(25) | 169,0 | 0,0 | 0,0 | OK |
| Stirnblech1 | S 355 | 15,0 | CO9(25) | 355,0 | 0,0 | 46,0 | OK |
| Fahnenblech1 | S 355 | 10,0 | CO11(30) | 229,0 | 0,0 | 13,1 | OK |
| Rippe1a | S 355 | 10,0 | CO9(25) | 184,8 | 0,0 | 0,0 | OK |
| Rippe1b | S 355 | 10,0 | CO9(25) | 104,3 | 0,0 | 0,0 | OK |
| Rippe1c | S 355 | 10,0 | CO9(25) | 198,4 | 0,0 | 0,0 | OK |
| Rippe1d | S 355 | 10,0 | CO9(25) | 206,9 | 0,0 | 0,0 | OK |

**Bemessungsdaten**

| Material | $f_y$ [MPa] | $\varepsilon_{lim}$ [%] |
|---|---|---|
| S 355 | 355,0 | 5,0 |
| Baustahl S 355 | 355,0 | 5,0 |

**Erläuterung von Symbolen**

| | |
|---|---|
| $t_p$ | Plattendicke |
| $\sigma_{Ed}$ | Vergleichsspannung |
| $\varepsilon_{Pl}$ | Plastische Dehnung |
| $\sigma_{c,Ed}$ | Kontaktspannung |
| $f_y$ | Streckgrenze |
| $\varepsilon_{lim}$ | Grenzwert plastische Dehnung |

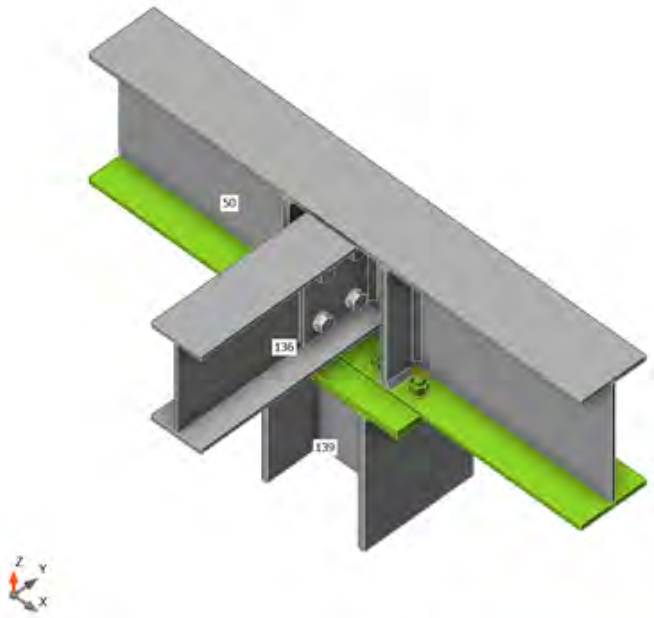


*Gesamt, CO9(25)*

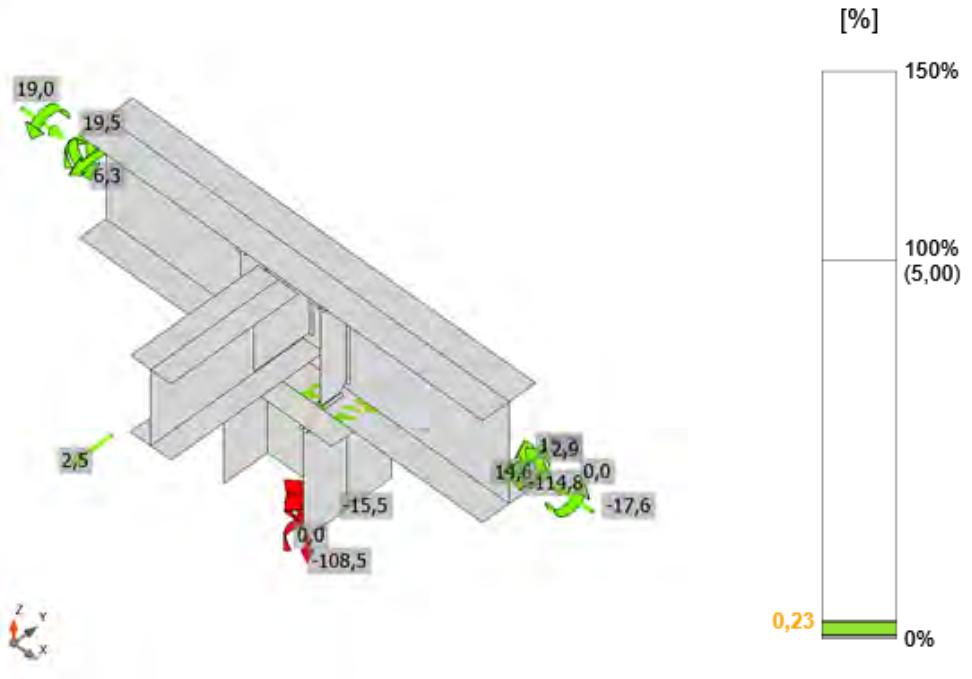


*Dehnung, CO9(25)*

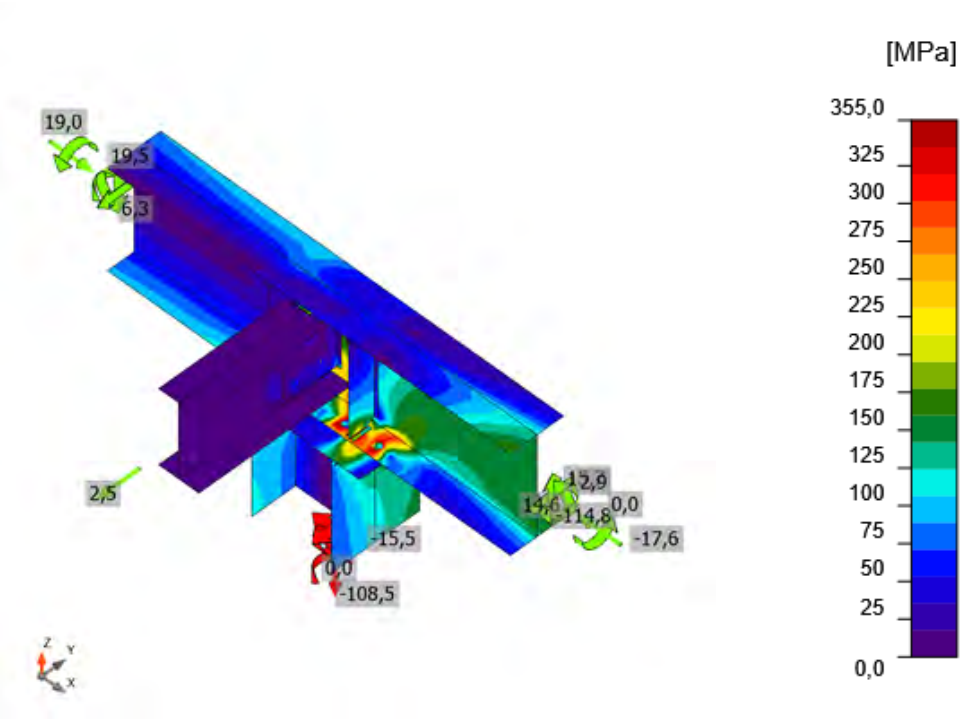


*Vergleichsspannung, CO9(25)*

## Schrauben

| Form | Position | Klasse | Lasten | $F_{t,Ed}$ [kN] | $F_{v,Ed}$ [kN] | $F_{b,Rd}$ [kN] | $Ut_t$ [%] | $Ut_s$ [%] | $Ut_{ts}$ [%] | Konstruktionsregeln | Status |
|---|---|---|---|---|---|---|---|---|---|---|---|
| 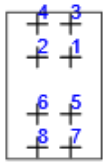 | B1 | M16 8.8 - 1 | CO9(25) | 73,1 | 3,2 | 71,1 | 80,8 | 5,2 | 63,0 | OK | OK |
| | B2 | M16 8.8 - 1 | CO9(25) | 72,4 | 1,3 | 153,7 | 80,1 | 2,1 | 59,3 | OK | OK |
| | B3 | M16 8.8 - 1 | CO9(25) | 68,4 | 4,7 | 65,8 | 75,6 | 7,8 | 61,8 | OK | OK |
| | B4 | M16 8.8 - 1 | CO9(25) | 60,0 | 1,3 | 123,7 | 66,3 | 2,2 | 49,6 | OK | OK |
| | B5 | M16 8.8 - 1 | CO9(25) | 5,9 | 2,2 | 64,2 | 6,5 | 3,6 | 8,2 | OK | OK |
| | B6 | M16 8.8 - 1 | CO9(25) | 5,1 | 2,5 | 153,7 | 5,6 | 4,2 | 8,2 | OK | OK |
| | B7 | M16 8.8 - 1 | CO11(8) | 0,7 | 7,0 | 134,9 | 0,8 | 11,7 | 12,2 | OK | OK |
| | B8 | M16 8.8 - 1 | CO11(23) | 0,9 | 7,3 | 140,9 | 1,0 | 12,0 | 12,8 | OK | OK |
| 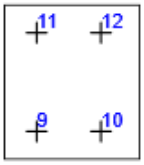 | B9 | M16 8.8 - 2 | CO11(29) | 1,3 | 8,7 | 75,5 | 1,5 | 14,4 | 15,5 | OK | OK |
| | B10 | M16 8.8 - 2 | CO11(15) | 1,8 | 9,6 | 66,0 | 2,0 | 16,0 | 17,4 | OK | OK |
| | B11 | M16 8.8 - 2 | CO11(29) | 1,7 | 9,0 | 61,6 | 1,9 | 15,0 | 16,3 | OK | OK |
| | B12 | M16 8.8 - 2 | CO11(33) | 3,0 | 9,6 | 43,4 | 3,3 | 22,0 | 18,2 | OK | OK |

**Bemessungsdaten**

| Klasse | $F_{t,Rd}$ [kN] | $B_{p,Rd}$ [kN] | $F_{v,Rd}$ [kN] |
|---|---|---|---|
| M16 8.8 - 1 | 90,4 | 183,7 | 60,3 |
| M16 8.8 - 2 | 90,4 | 99,4 | 60,3 |

**Erläuterung von Symbolen**

| | |
|---|---|
| $F_{t,Ed}$ | Zugkraft |
| $F_{v,Ed}$ | Resultierende der Schraubenscherkräfte Vy und Vz in Scherebenen |
| $F_{b,Rd}$ | Lochleibungstragfähigkeit der Platte nach EN 1993-1-8 Tab. 3.4 |
| $Ut_t$ | Ausnutzung unter Zug |
| $Ut_s$ | Ausnutzung unter Schub |
| $Ut_{ts}$ | Interaktion von Zug und Schub EN_1993-1-8 Tabelle 3.4 |
| $F_{t,Rd}$ | Zugtragfähigkeit der Schraube nach EN 1993-1-8 Tabelle 3.4 |
| $B_{p,Rd}$ | Durchstanztragfähigkeit nach EN 1993-1-8 Tabelle 3.4 |
| $F_{v,Rd}$ | Schertragfähigkeit der Schraube nach EN 1993-1-8 Tabelle 3.4 |

## Schweißnähte

| Position | Kante | $T_w$ [mm] | L [mm] | Lasten | $\sigma_{w,Ed}$ [MPa] | $\varepsilon_{Pl}$ [%] | $\sigma_{\perp}$ [MPa] | $\tau_{\perp}$ [MPa] | $\tau_{\parallel}$ [MPa] | Ut [%] | $Ut_c$ [%] | Konstruktionsregeln | Status |
|---|---|---|---|---|---|---|---|---|---|---|---|---|---|
| Stirnblech1 | 139-bfl 1 | ◢ 6,0 ◣ | 199 | CO9(25) | 198,1 | 0,0 | -50,1 | -110,6 | -2,2 | 45,5 | 23,9 | OK | OK |
| | | ◢ 6,0 ◣ | 199 | CO9(25) | 237,2 | 0,0 | -161,0 | 100,5 | 1,7 | 54,4 | 28,8 | OK | OK |
| Stirnblech1 | 139-tfl 1 | ◢ 6,0 ◣ | 199 | CO9(25) | 321,5 | 0,0 | 245,8 | 119,6 | -4,4 | 73,8 | 42,1 | OK | OK |
| | | ◢ 6,0 ◣ | 199 | CO9(25) | 231,3 | 0,0 | 6,8 | -133,2 | 8,6 | 53,1 | 31,5 | OK | OK |
| Stirnblech1 | 139-w 1 | ◢ 6,0 ◣ | 179 | CO9(25) | 149,5 | 0,0 | 25,0 | 23,4 | -81,8 | 34,3 | 22,1 | OK | OK |
| | | ◢ 6,0 ◣ | 179 | CO9(25) | 157,7 | 0,0 | 23,5 | -25,1 | 86,4 | 36,2 | 22,8 | OK | OK |
| 50-w 1 | Fahnenblech1 | ◢ 6,0 ◣ | 143 | CO11(29) | 381,1 | 0,0 | 132,6 | 123,3 | -165,4 | 87,5 | 44,0 | OK | OK |
| | | ◢ 6,0 ◣ | 143 | CO11(29) | 369,8 | 0,0 | 105,8 | -115,1 | 169,2 | 84,9 | 42,1 | OK | OK |
| 50-bfl 1 | Rippe1a | ◢ 6,0 ◣ | 42 | CO11(15) | 56,6 | 0,0 | -17,7 | -13,8 | -27,8 | 13,0 | 9,0 | OK | OK |
| | | ◢ 6,0 ◣ | 42 | CO11(15) | 48,4 | 0,0 | -10,4 | 14,2 | 23,3 | 11,1 | 9,0 | OK | OK |
| 50-w 1 | Rippe1a | ◢ 6,0 ◣ | 190 | CO11(15) | 74,4 | 0,0 | -13,9 | -11,7 | 40,6 | 17,1 | 9,7 | OK | OK |
| | | ◢ 6,0 ◣ | 190 | CO11(21) | 65,0 | 0,0 | -12,0 | 13,4 | -34,3 | 14,9 | 9,6 | OK | OK |
| 50-tfl 1 | Rippe1a | ◢ 6,0 ◣ | 42 | CO11(21) | 165,1 | 0,0 | -81,4 | -80,2 | -21,0 | 37,9 | 30,8 | OK | OK |
| | | ◢ 6,0 ◣ | 42 | CO9(25) | 175,6 | 0,0 | -88,7 | 77,8 | 40,0 | 40,3 | 34,1 | OK | OK |
| 50-bfl 1 | Rippe1b | ◢ 6,0 ◣ | 42 | CO11(21) | 32,0 | 0,0 | 4,8 | 1,9 | 18,1 | 7,3 | 7,0 | OK | OK |
| | | ◢ 6,0 ◣ | 42 | CO11(21) | 40,6 | 0,0 | -0,1 | -2,8 | -23,3 | 9,3 | 7,9 | OK | OK |
| 50-w 1 | Rippe1b | ◢ 6,0 ◣ | 190 | CO11(8) | 43,5 | 0,0 | -19,2 | -14,3 | 17,4 | 10,0 | 7,3 | OK | OK |
| | | ◢ 6,0 ◣ | 190 | CO9(25) | 36,5 | 0,0 | -3,3 | 5,7 | -20,2 | 8,4 | 6,7 | OK | OK |
| 50-tfl 1 | Rippe1b | ◢ 6,0 ◣ | 42 | CO9(25) | 104,7 | 0,0 | -52,6 | -51,4 | -9,2 | 24,0 | 18,8 | OK | OK |

| Position | Kante | $T_w$ [mm] | L [mm] | Lasten | $\sigma_{w,Ed}$ [MPa] | $\varepsilon_{Pl}$ [%] | $\sigma_{\perp}$ [MPa] | $\tau_{\perp}$ [MPa] | $\tau_{\parallel}$ [MPa] | Ut [%] | $Ut_c$ [%] | Konstruktionsregeln | Status |
|---|---|---|---|---|---|---|---|---|---|---|---|---|---|
| | | ◢ 6,0 ◣ | 42 | CO9(25) | 62,2 | 0,0 | -29,9 | 31,1 | -4,7 | 14,3 | 12,1 | OK | OK |
| 50-bfl 1 | Rippe1c | ◢ 6,0 ◣ | 42 | CO11(24) | 45,4 | 0,0 | -17,4 | -15,2 | -18,8 | 10,4 | 8,8 | OK | OK |
| | | ◢ 6,0 ◣ | 42 | CO11(24) | 47,7 | 0,0 | -7,6 | 9,9 | 25,3 | 11,0 | 8,3 | OK | OK |
| 50-w 1 | Rippe1c | ◢ 6,0 ◣ | 190 | CO9(25) | 69,9 | 0,0 | 21,8 | 16,5 | -34,6 | 16,1 | 12,4 | OK | OK |
| | | ◢ 6,0 ◣ | 190 | CO11(24) | 69,2 | 0,0 | -20,1 | 12,6 | -36,1 | 15,9 | 9,5 | OK | OK |
| 50-tfl 1 | Rippe1c | ◢ 6,0 ◣ | 42 | CO9(25) | 182,6 | 0,0 | 86,1 | 88,4 | 28,9 | 41,9 | 34,0 | OK | OK |
| | | ◢ 6,0 ◣ | 42 | CO9(25) | 213,0 | 0,0 | 104,6 | -102,4 | -31,4 | 48,9 | 40,8 | OK | OK |
| 50-bfl 1 | Rippe1d | ◢ 6,0 ◣ | 42 | CO11(15) | 34,1 | 0,0 | 6,1 | 7,4 | 17,9 | 7,8 | 6,5 | OK | OK |
| | | ◢ 6,0 ◣ | 42 | CO11(24) | 38,7 | 0,0 | -23,6 | 15,5 | 8,5 | 8,9 | 8,6 | OK | OK |
| 50-w 1 | Rippe1d | ◢ 6,0 ◣ | 190 | CO9(25) | 74,7 | 0,0 | 0,2 | 11,3 | -41,6 | 17,1 | 13,1 | OK | OK |
| | | ◢ 6,0 ◣ | 190 | CO9(25) | 67,1 | 0,0 | 10,8 | -7,1 | 37,6 | 15,4 | 12,9 | OK | OK |
| 50-tfl 1 | Rippe1d | ◢ 6,0 ◣ | 42 | CO9(25) | 236,5 | 0,0 | 116,6 | 112,3 | 38,7 | 54,3 | 45,2 | OK | OK |
| | | ◢ 6,0 ◣ | 42 | CO9(25) | 219,5 | 0,0 | 103,6 | -108,0 | -28,6 | 50,4 | 40,6 | OK | OK |

**Bemessungsdaten**

| Material | $f_u$ [MPa] | $\beta_w$ [-] | $\sigma_{w,Rd}$ [MPa] | 0.9 σ [MPa] |
|---|---|---|---|---|
| S 355 | 490,0 | 0,90 | 435,6 | 352,8 |

**Erläuterung von Symbolen**

| | |
|---|---|
| $T_w$ | Nahtdicke a |
| L | Länge |
| $\sigma_{w,Ed}$ | Vergleichsspannung |
| $\varepsilon_{Pl}$ | Dehnung |
| $\sigma_{\perp}$ | Senkrechte Spannung |
| $\tau_{\perp}$ | Scherspannung senkrecht zur Schweißnahtachse |
| $\tau_{\parallel}$ | Scherspannung parallel zur Schweißnahtachse |
| Ut | Ausnutzung |
| $Ut_c$ | Schätzung der Schweißnahtkapazität |
| ◢ | Kehlnaht |
| $f_u$ | Grenzfestigkeit der Schweißnaht |
| $\beta_w$ | Korrelationsfaktor nach EN 1993-1-8 Tab. 4.1 |
| $\sigma_{w,Rd}$ | Tragfähigkeit der Schweißnaht |
| 0.9 σ | Senkrechter Spannungswiderstand - 0.9*fu / γM2 |

### Beulen

**Die Beulanalyse wurde nicht berechnet.**

## Normeinstellungen

| Position | Wert | Einheit | Bezug |
|---|---|---|---|
| Sicherheitsfaktor $\gamma_{M0}$ | 1,00 | - | EN 1993-1-1 – 6.1 |
| Sicherheitsfaktor $\gamma_{M1}$ | 1,00 | - | EN 1993-1-1 – 6.1 |
| Sicherheitsfaktor $\gamma_{M2}$ | 1,25 | - | EN 1993-1-1 – 6.1 |
| Sicherheitsfaktor $\gamma_{M3}$ | 1,25 | - | EN 1993-1-8 – Table 2.1 |
| Sicherheitsfaktor $\gamma_C$ | 1,50 | - | EN 1992-1-1 – 2.4.2.4 |
| Sicherheitsfaktor $\gamma_{Inst}$ | 1,20 | - | EN 1992-4 – Table 4.1 |
| Verbindungskoeffizient βj | 0,67 | - | EN 1993-1-8 – 6.2.5(7) |
| Wirksame Fläche - Einfluss der Netzgröße | 0,10 | - | |
| Reibungsbeiwert - Beton | 0,25 | - | EN 1993-1-8 |
| Reibungskoeffizient bei gleitfesten Verbindungen | 0,30 | - | EN 1993-1-8 – Table 3.7 |
| Plastische Dehnung - Grenzwert | 0,05 | - | EN 1993-1-5 |
| Konstruktionsregeln | Ja | | |
| Distance between bolts [d0] | 2,20 | - | EN 1993-1-8 – Table 3.3 |
| Distance between bolts and edge [d0] | 1,20 | - | EN 1993-1-8 – Table 3.3 |
| Nachweis der Tragfähigkeit bei Betonausbruch | Beide | | |
| Berechnetes αb für Lochleibungsnachweis anwenden. | Ja | | EN 1993-1-8 – Table 3.4 |
| Gerissener Beton | Ja | | EN 1992-4 |
| Überprüfen der lokalen Verformung | Ja | | |
| Lokale Verformung - Grenzwert | 0,03 | - | CIDECT DG 1, 3 – 1.1 |
| Geometrische Nichtlinearität (GMNA) | Ja | | Analyse mit großen Verformungen für Verbindungen mit Hohlprofilen |
| Ausgesteiftes System | Nein | | EN 1993-1-8 – 5.2.2.5 |

| | |
|---|---|
| **Projekt:** | **IdeaStatiCa-Stadion_Fazanerija_JK-6_BR - 975** |
| **Projektnummer:** | **Detajl D2-O5** |
| **Autor:** | **mag. Igor Gorup dipl. ing.** |

## Projektdaten

| | |
|---|---|
| Projektname | IdeaStatiCa-Stadion_Fazanerija_JK-6_BR - 975 |
| Projektnummer | Detajl D2-O5 |
| Autor | mag. Igor Gorup dipl. ing. |
| Beschreibung | |
| Datum | 18.06.2025 |
| Norm | EN |

## Material

| | |
|---|---|
| Stahl | Baustahl S 355, Baustahl S 235, S 355 |

# Projektposition 975

## Bemessung

| | |
|---|---|
| Name | 975 |
| Beschreibung | |
| Berechnung | Spannung, Dehnung/ Lasten im Gleichgewicht |

### Bauteile

#### Geometrie

| Name | Querschnitt | β – Rotation [°] | Y - Rotation [°] | α - Rotation [°] | Abstand ex [mm] | Abstand ey [mm] | Abstand ez [mm] |
|---|---|---|---|---|---|---|---|
| 136 | 697 - IPE180 | -90,0 | 0,0 | -180,0 | 0 | 0 | -60 |
| 48 | 272 - IPE300 | 0,0 | 0,0 | -180,0 | 0 | 0 | 0 |
| 122 | 12 - HEA200 | 0,0 | 90,0 | -180,0 | 0 | 0 | 0 |
| 135 | 697 - IPE180 | -90,0 | 0,0 | -180,0 | 0 | 0 | -60 |

#### Auflager und Kräfte

| Name | Auflager | Kräfte in | X [mm] |
|---|---|---|---|
| 136 / anfang | Mx-My-Mz | Schrauben | 74 |
| 48 / anfang | | Position | 0 |
| 48 / ende | | Position | 0 |
| 122 / anfang | N-Vy-Vz-Mx-My-Mz | Position | 0 |
| 135 / ende | Mx-My-Mz | Schrauben | 74 |

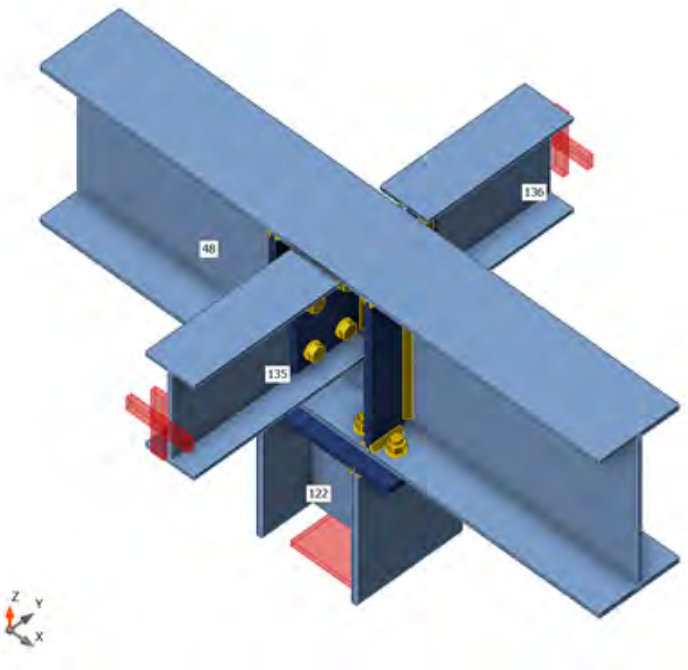


### Querschnitte

| Name | Material |
|---|---|
| 697 - IPE180 | S 355 |
| 272 - IPE300 | Baustahl S 355 |
| 12 - HEA200 | Baustahl S 355 |

## Schrauben

| Name | Durchmesser [mm] | $f_y$ [MPa] | $f_u$ [MPa] | Bruttofläche [$mm^2$] |
|---|---|---|---|---|
| M16 8.8 | 16 | 640,0 | 800,0 | 201 |

## Lasteinwirkungen (Kräfte im Gleichgewicht)

| Name | Bauteil | N [kN] | Vy [kN] | Vz [kN] | Mx [kNm] | My [kNm] | Mz [kNm] |
|---|---|---|---|---|---|---|---|
| CO11(36) | 136 / Anfang | -2,6 | 0,1 | 31,0 | 0,0 | 0,0 | 0,0 |
| | 48 / Anfang | 13,1 | 0,3 | 96,5 | 0,1 | 116,1 | -0,4 |
| | 48 / Ende | -6,5 | 0,6 | -70,8 | -0,1 | -91,2 | 0,3 |
| | 122 / Anfang | 99,5 | -0,4 | -8,3 | 0,0 | -24,8 | 0,0 |
| | 135 / Ende | 1,9 | 0,1 | 42,7 | 0,0 | 0,0 | 0,0 |
| CO11(37) | 136 / Anfang | 1,2 | 0,1 | 31,1 | 0,0 | 0,0 | 0,0 |
| | 48 / Anfang | -3,0 | -1,5 | 90,7 | 0,0 | 96,6 | 0,6 |
| | 48 / Ende | 3,4 | 0,6 | -36,2 | 0,0 | -85,2 | -0,6 |
| | 122 / Anfang | 128,2 | 1,6 | -2,2 | 0,1 | -11,4 | 0,0 |
| | 135 / Ende | 1,4 | 0,1 | 42,7 | 0,0 | 0,0 | 0,0 |
| CO11(38) | 136 / Anfang | 1,2 | 0,1 | 31,1 | 0,0 | 0,0 | 0,0 |
| | 48 / Anfang | -2,9 | -1,5 | 91,5 | 0,0 | 100,0 | 0,7 |
| | 48 / Ende | 2,8 | -0,1 | -5,6 | 0,0 | -90,2 | -0,7 |
| | 122 / Anfang | 159,7 | 1,5 | -1,7 | 0,1 | -9,8 | 0,0 |
| | 135 / Ende | 1,4 | 0,1 | 42,7 | 0,0 | 0,0 | 0,0 |
| CO11(39) | 136 / Anfang | 1,9 | 0,0 | 14,4 | 0,0 | 0,0 | 0,0 |
| | 48 / Anfang | -6,5 | -1,1 | 40,5 | 0,0 | 34,8 | 0,2 |
| | 48 / Ende | 6,1 | 1,1 | -62,9 | 0,0 | -30,2 | -0,1 |
| | 122 / Anfang | 11,7 | 1,6 | -0,2 | 0,0 | -4,5 | 0,0 |
| | 135 / Ende | 0,4 | 0,0 | 19,8 | 0,0 | 0,0 | 0,0 |
| CO11(40) | 136 / Anfang | -3,9 | 0,0 | 27,5 | 0,0 | 0,0 | 0,0 |
| | 48 / Anfang | 12,2 | 2,4 | 86,2 | 0,0 | 105,8 | -1,1 |
| | 48 / Ende | -11,3 | -0,5 | 30,8 | -0,1 | -94,4 | 1,0 |
| | 122 / Anfang | 182,5 | -3,2 | -3,3 | -0,1 | -11,4 | 0,1 |
| | 135 / Ende | 1,6 | 0,1 | 37,9 | 0,0 | 0,0 | 0,0 |
| CO11(41) | 136 / Anfang | 0,2 | 0,0 | 14,4 | 0,0 | 0,0 | 0,0 |
| | 48 / Anfang | 2,9 | -0,8 | 45,0 | 0,0 | 49,3 | -0,2 |
| | 48 / Ende | 3,9 | 2,6 | -110,9 | 0,0 | -32,6 | 0,3 |
| | 122 / Anfang | -31,7 | 1,0 | -5,7 | 0,1 | -16,7 | 0,0 |
| | 135 / Ende | 0,6 | 0,0 | 19,8 | 0,0 | 0,0 | 0,0 |
| CO11(42) | 136 / Anfang | -4,1 | 0,1 | 27,5 | 0,0 | 0,0 | 0,0 |
| | 48 / Anfang | 13,0 | 2,5 | 85,8 | 0,0 | 103,8 | -1,2 |
| | 48 / Ende | -11,2 | -0,4 | 3,2 | -0,1 | -90,6 | 1,0 |
| | 122 / Anfang | 154,5 | -3,1 | -3,9 | -0,2 | -13,2 | 0,1 |
| | 135 / Ende | 1,7 | 0,1 | 37,9 | 0,0 | 0,0 | 0,0 |
| CO11(43) | 136 / Anfang | -3,5 | 0,1 | 31,0 | 0,0 | 0,0 | 0,0 |
| | 48 / Anfang | 12,7 | 1,6 | 96,5 | 0,0 | 117,8 | -0,9 |
| | 48 / Ende | -9,8 | -0,2 | 1,9 | -0,1 | -100,8 | 0,8 |
| | 122 / Anfang | 172,2 | -2,1 | -5,2 | -0,1 | -17,0 | 0,0 |
| | 135 / Ende | 1,8 | 0,1 | 42,7 | 0,0 | 0,0 | 0,0 |
| CO11(44) | 136 / Anfang | 1,7 | 0,1 | 19,4 | 0,0 | 0,0 | 0,0 |
| | 48 / Anfang | -5,3 | -1,2 | 56,3 | 0,0 | 53,0 | 0,3 |
| | 48 / Ende | 5,4 | 1,0 | -68,1 | 0,0 | -45,7 | -0,3 |
| | 122 / Anfang | 34,3 | 1,6 | -1,0 | 0,1 | -7,3 | 0,0 |
| | 135 / Ende | 0,7 | 0,1 | 26,7 | 0,0 | 0,0 | 0,0 |
| CO11(45) | 136 / Anfang | -3,6 | 0,1 | 31,0 | 0,0 | 0,0 | 0,0 |
| | 48 / Anfang | 13,5 | 1,7 | 96,1 | 0,0 | 115,9 | -1,0 |

| Name | Bauteil | N [kN] | Vy [kN] | Vz [kN] | Mx [kNm] | My [kNm] | Mz [kNm] |
|---|---|---|---|---|---|---|---|
| | 48 / Ende | -9,7 | -0,1 | -26,0 | -0,1 | -97,0 | 0,8 |
| | 122 / Anfang | 144,0 | -2,0 | -5,9 | -0,2 | -18,9 | 0,0 |
| | 135 / Ende | 1,9 | 0,1 | 42,7 | 0,0 | 0,0 | 0,0 |
| CO11(46) | 136 / Anfang | -1,9 | 0,1 | 31,0 | 0,0 | 0,0 | 0,0 |
| | 48 / Anfang | 4,6 | 1,2 | 91,9 | 0,0 | 102,3 | -0,3 |
| | 48 / Ende | -7,2 | -1,3 | 19,1 | 0,0 | -94,9 | 0,2 |
| | 122 / Anfang | 184,8 | -1,5 | -0,8 | 0,0 | -7,3 | 0,1 |
| | 135 / Ende | 1,7 | 0,1 | 42,7 | 0,0 | 0,0 | 0,0 |
| CO11(47) | 136 / Anfang | -0,8 | 0,1 | 31,1 | 0,0 | 0,0 | 0,0 |
| | 48 / Anfang | 3,5 | -0,2 | 92,7 | 0,0 | 104,5 | 0,3 |
| | 48 / Ende | -4,2 | -0,7 | 1,8 | 0,0 | -93,0 | -0,3 |
| | 122 / Anfang | 168,3 | 0,1 | -2,5 | 0,0 | -11,5 | 0,0 |
| | 135 / Ende | 1,7 | 0,1 | 42,7 | 0,0 | 0,0 | 0,0 |
| CO11(24) | 136 / Anfang | -2,3 | 0,1 | 27,6 | 0,0 | 0,0 | 0,0 |
| | 48 / Anfang | 3,8 | 1,9 | 82,3 | 0,0 | 93,0 | -0,4 |
| | 48 / Ende | -8,9 | -1,5 | 72,9 | 0,0 | -92,4 | 0,4 |
| | 122 / Anfang | 220,6 | -2,7 | 1,4 | 0,0 | -0,6 | 0,1 |
| | 135 / Ende | 1,4 | 0,1 | 37,9 | 0,0 | 0,0 | 0,0 |
| CO9(25) | 136 / Anfang | -2,9 | 0,0 | 0,0 | 0,0 | 0,0 | 0,0 |
| | 48 / Anfang | 21,9 | 0,5 | 9,5 | 0,0 | 31,3 | -0,8 |
| | 48 / Ende | -13,9 | 2,9 | -116,9 | 0,0 | 2,6 | 0,8 |
| | 122 / Anfang | -107,5 | 0,8 | -14,8 | 0,0 | -33,9 | 0,0 |
| | 135 / Ende | 0,6 | 0,0 | 0,0 | 0,0 | 0,0 | 0,0 |
| CO11(26) | 136 / Anfang | -3,2 | 0,0 | 14,4 | 0,0 | 0,0 | 0,0 |
| | 48 / Anfang | 9,4 | 2,0 | 46,2 | 0,0 | 56,5 | -0,7 |
| | 48 / Ende | -8,3 | 0,0 | 2,7 | -0,1 | -49,9 | 0,6 |
| | 122 / Anfang | 83,1 | -2,7 | -2,0 | -0,1 | -6,7 | 0,1 |
| | 135 / Ende | 0,8 | 0,0 | 19,8 | 0,0 | 0,0 | 0,0 |
| CO11(27) | 136 / Anfang | 3,2 | 0,0 | 14,4 | 0,0 | 0,0 | 0,0 |
| | 48 / Anfang | -10,6 | -1,8 | 40,5 | 0,0 | 35,2 | 0,3 |
| | 48 / Ende | 9,9 | 1,1 | -37,2 | 0,0 | -33,5 | -0,3 |
| | 122 / Anfang | 37,4 | 2,3 | 0,9 | 0,0 | -1,7 | -0,1 |
| | 135 / Ende | 0,2 | 0,0 | 19,8 | 0,0 | 0,0 | 0,0 |
| CO11(28) | 136 / Anfang | -1,6 | 0,0 | 14,4 | 0,0 | 0,0 | 0,0 |
| | 48 / Anfang | 0,8 | 1,5 | 43,0 | 0,0 | 46,9 | 0,0 |
| | 48 / Ende | -6,5 | -1,5 | 76,0 | 0,0 | -52,8 | 0,0 |
| | 122 / Anfang | 153,1 | -2,4 | 3,2 | 0,1 | 5,9 | 0,1 |
| | 135 / Ende | 0,6 | 0,0 | 19,8 | 0,0 | 0,0 | 0,0 |
| CO11(29) | 136 / Anfang | -2,0 | 0,0 | 22,5 | 0,0 | 0,0 | 0,0 |
| | 48 / Anfang | 2,5 | 1,8 | 66,5 | 0,0 | 74,8 | -0,2 |
| | 48 / Ende | -7,8 | -1,4 | 77,7 | 0,0 | -76,8 | 0,3 |
| | 122 / Anfang | 197,7 | -2,6 | 2,1 | 0,0 | 2,0 | 0,1 |
| | 135 / Ende | 1,0 | 0,1 | 31,0 | 0,0 | 0,0 | 0,0 |
| CO11(30) | 136 / Anfang | -3,7 | 0,0 | 19,4 | 0,0 | 0,0 | 0,0 |
| | 48 / Anfang | 11,2 | 2,2 | 62,2 | 0,0 | 75,7 | -0,8 |
| | 48 / Ende | -9,8 | -0,4 | 2,1 | -0,1 | -66,5 | 0,7 |
| | 122 / Anfang | 110,4 | -2,9 | -2,8 | -0,1 | -9,2 | 0,1 |
| | 135 / Ende | 1,2 | 0,0 | 26,7 | 0,0 | 0,0 | 0,0 |
| CO11(32) | 136 / Anfang | 2,6 | 0,1 | 27,6 | 0,0 | 0,0 | 0,0 |

| Name | Bauteil | N [kN] | Vy [kN] | Vz [kN] | Mx [kNm] | My [kNm] | Mz [kNm] |
|---|---|---|---|---|---|---|---|
| | 48 / Anfang | -8,0 | -2,2 | 79,7 | 0,0 | 81,3 | 0,8 |
| | 48 / Ende | 8,5 | 1,2 | -41,1 | 0,0 | -73,0 | -0,7 |
| | 122 / Anfang | 104,1 | 2,5 | -1,0 | 0,1 | -8,3 | -0,1 |
| | 135 / Ende | 1,0 | 0,1 | 37,9 | 0,0 | 0,0 | 0,0 |
| CO11(33) | 136 / Anfang | 0,9 | 0,1 | 27,6 | 0,0 | 0,0 | 0,0 |
| | 48 / Anfang | 1,4 | -1,9 | 84,3 | 0,1 | 95,9 | 0,4 |
| | 48 / Ende | 6,0 | 2,7 | -89,0 | 0,0 | -75,3 | -0,2 |
| | 122 / Anfang | 60,7 | 1,8 | -6,5 | 0,2 | -20,6 | -0,1 |
| | 135 / Ende | 1,2 | 0,1 | 37,9 | 0,0 | 0,0 | 0,0 |
| CO11(34) | 136 / Anfang | -4,0 | 0,1 | 27,5 | 0,0 | 0,0 | 0,0 |
| | 48 / Anfang | 12,7 | 2,5 | 85,7 | 0,0 | 103,1 | -1,3 |
| | 48 / Ende | -10,8 | 0,0 | -1,9 | -0,1 | -89,5 | 1,1 |
| | 122 / Anfang | 149,2 | -3,0 | -4,0 | -0,2 | -13,7 | 0,1 |
| | 135 / Ende | 1,6 | 0,1 | 37,9 | 0,0 | 0,0 | 0,0 |
| CO11(35) | 136 / Anfang | -2,5 | 0,1 | 27,6 | 0,0 | 0,0 | 0,0 |
| | 48 / Anfang | 4,3 | 2,0 | 81,7 | 0,0 | 90,5 | -0,5 |
| | 48 / Ende | -8,8 | -1,5 | 47,1 | 0,0 | -88,5 | 0,4 |
| | 122 / Anfang | 194,3 | -2,6 | 1,0 | 0,0 | -2,0 | 0,1 |
| | 135 / Ende | 1,5 | 0,1 | 37,9 | 0,0 | 0,0 | 0,0 |
| CO11(15) | 136 / Anfang | 1,5 | 0,0 | 14,4 | 0,0 | 0,0 | 0,0 |
| | 48 / Anfang | -1,6 | -1,5 | 44,8 | 0,0 | 49,2 | 0,0 |
| | 48 / Ende | 7,8 | 2,6 | -83,5 | 0,0 | -35,8 | 0,1 |
| | 122 / Anfang | -4,6 | 1,7 | -4,4 | 0,1 | -13,4 | -0,1 |
| | 135 / Ende | 0,3 | 0,0 | 19,8 | 0,0 | 0,0 | 0,0 |
| CO11(16) | 136 / Anfang | -2,4 | 0,1 | 31,0 | 0,0 | 0,0 | 0,0 |
| | 48 / Anfang | 12,3 | 0,3 | 96,8 | 0,0 | 117,9 | -0,3 |
| | 48 / Ende | -6,6 | 0,5 | -42,6 | -0,1 | -95,0 | 0,3 |
| | 122 / Anfang | 128,0 | -0,5 | -7,6 | 0,0 | -22,9 | 0,0 |
| | 135 / Ende | 1,8 | 0,1 | 42,7 | 0,0 | 0,0 | 0,0 |
| CO11(17) | 136 / Anfang | 2,9 | 0,1 | 22,6 | 0,0 | 0,0 | 0,0 |
| | 48 / Anfang | -8,9 | -2,1 | 64,8 | 0,0 | 66,7 | 0,7 |
| | 48 / Ende | 8,5 | 0,5 | -5,7 | 0,1 | -62,6 | -0,6 |
| | 122 / Anfang | 112,5 | 2,4 | 0,1 | 0,0 | -4,1 | -0,1 |
| | 135 / Ende | 0,6 | 0,1 | 31,0 | 0,0 | 0,0 | 0,0 |
| CO11(18) | 136 / Anfang | -3,6 | 0,1 | 27,5 | 0,0 | 0,0 | 0,0 |
| | 48 / Anfang | 13,6 | 1,6 | 85,7 | 0,0 | 102,0 | -0,9 |
| | 48 / Ende | -8,9 | -0,1 | -54,4 | -0,1 | -82,9 | 0,7 |
| | 122 / Anfang | 96,8 | -1,9 | -6,1 | -0,1 | -19,0 | 0,1 |
| | 135 / Ende | 1,8 | 0,1 | 37,9 | 0,0 | 0,0 | 0,0 |
| CO11(20) | 136 / Anfang | 2,6 | 0,1 | 27,6 | 0,0 | 0,0 | 0,0 |
| | 48 / Anfang | -7,8 | -2,3 | 79,9 | 0,0 | 82,0 | 0,9 |
| | 48 / Ende | 8,1 | 0,6 | -36,0 | 0,0 | -74,1 | -0,8 |
| | 122 / Anfang | 109,3 | 2,5 | -0,9 | 0,1 | -7,9 | -0,1 |
| | 135 / Ende | 1,0 | 0,1 | 37,9 | 0,0 | 0,0 | 0,0 |
| CO11(22) | 136 / Anfang | -0,6 | 0,1 | 31,1 | 0,0 | 0,0 | 0,0 |
| | 48 / Anfang | 6,4 | -1,0 | 95,2 | 0,1 | 111,0 | 0,1 |
| | 48 / Ende | 0,9 | 2,1 | -83,7 | 0,0 | -87,4 | 0,0 |
| | 122 / Anfang | 85,2 | 1,0 | -7,6 | 0,1 | -23,6 | 0,0 |
| | 135 / Ende | 1,6 | 0,1 | 42,7 | 0,0 | 0,0 | 0,0 |

| Name | Bauteil | N [kN] | Vy [kN] | Vz [kN] | Mx [kNm] | My [kNm] | Mz [kNm] |
|---|---|---|---|---|---|---|---|
| CO11(3) | 136 / Anfang | -1,8 | 0,1 | 31,1 | 0,0 | 0,0 | 0,0 |
| | 48 / Anfang | 4,1 | 1,2 | 92,5 | 0,0 | 104,8 | -0,2 |
| | 48 / Ende | -7,4 | -1,3 | 45,0 | 0,0 | -98,8 | 0,2 |
| | 122 / Anfang | 211,3 | -1,6 | -0,4 | 0,0 | -6,0 | 0,1 |
| | 135 / Ende | 1,7 | 0,1 | 42,7 | 0,0 | 0,0 | 0,0 |
| CO11(4) | 136 / Anfang | -2,0 | 0,0 | 19,4 | 0,0 | 0,0 | 0,0 |
| | 48 / Anfang | 10,7 | 0,3 | 62,1 | 0,0 | 72,4 | -0,5 |
| | 48 / Ende | -3,7 | 1,5 | -109,7 | 0,0 | -50,9 | 0,4 |
| | 122 / Anfang | -1,5 | -0,2 | -7,6 | 0,0 | -21,5 | 0,0 |
| | 135 / Ende | 1,1 | 0,0 | 26,7 | 0,0 | 0,0 | 0,0 |
| CO11(7) | 136 / Anfang | -0,5 | 0,1 | 27,6 | 0,0 | 0,0 | 0,0 |
| | 48 / Anfang | 6,0 | -1,0 | 84,5 | 0,1 | 96,2 | 0,0 |
| | 48 / Ende | 2,1 | 2,6 | -116,8 | 0,0 | -72,2 | 0,1 |
| | 122 / Anfang | 33,2 | 1,0 | -7,9 | 0,1 | -24,0 | 0,0 |
| | 135 / Ende | 1,4 | 0,1 | 37,9 | 0,0 | 0,0 | 0,0 |
| CO11(8) | 136 / Anfang | 2,9 | 0,1 | 22,6 | 0,0 | 0,0 | 0,0 |
| | 48 / Anfang | -9,1 | -2,1 | 64,0 | 0,0 | 63,2 | 0,6 |
| | 48 / Ende | 9,1 | 1,2 | -36,0 | 0,0 | -57,5 | -0,5 |
| | 122 / Anfang | 81,5 | 2,4 | -0,3 | 0,1 | -5,7 | -0,1 |
| | 135 / Ende | 0,6 | 0,1 | 31,0 | 0,0 | 0,0 | 0,0 |
| CO11(9) | 136 / Anfang | -2,4 | 0,1 | 27,6 | 0,0 | 0,0 | 0,0 |
| | 48 / Anfang | 12,5 | 0,4 | 85,7 | 0,1 | 100,7 | -0,5 |
| | 48 / Ende | -4,9 | 1,6 | -109,3 | -0,1 | -74,9 | 0,5 |
| | 122 / Anfang | 41,9 | -0,3 | -8,8 | 0,0 | -25,8 | 0,0 |
| | 135 / Ende | 1,6 | 0,1 | 37,9 | 0,0 | 0,0 | 0,0 |

### Fehlende Lasten

| Name | X [kN] | Y [kN] | Z [kN] | Mx [kNm] | My [kNm] | Mz [kNm] |
|---|---|---|---|---|---|---|
| CO11(36) | -1,8 | 0,2 | 0,1 | 0,8 | 0,0 | 0,0 |
| CO11(37) | -1,9 | -3,3 | 0,0 | 1,0 | 0,0 | 0,0 |
| CO11(38) | -2,0 | -2,5 | 0,0 | 1,0 | 0,0 | 0,0 |
| CO11(39) | -0,7 | -3,9 | 0,0 | 0,5 | 0,0 | 0,0 |
| CO11(40) | -2,5 | 3,6 | 0,1 | 0,6 | 0,0 | 0,0 |
| CO11(41) | 1,0 | -3,5 | 0,0 | 0,4 | 0,0 | 0,0 |
| CO11(42) | -2,2 | 3,5 | 0,1 | 0,6 | 0,0 | 0,0 |
| CO11(43) | -2,5 | 2,3 | 0,1 | 0,8 | 0,0 | 0,0 |
| CO11(44) | -1,1 | -3,8 | 0,0 | 0,7 | 0,0 | 0,0 |
| CO11(45) | -2,2 | 2,2 | 0,1 | 0,8 | 0,0 | 0,0 |
| CO11(46) | -3,7 | 1,8 | 0,1 | 0,8 | 0,0 | 0,0 |
| CO11(47) | -3,5 | 0,0 | 0,1 | 0,9 | 0,0 | 0,0 |
| CO11(24) | -3,9 | 3,2 | 0,0 | 0,7 | 0,0 | 0,0 |
| CO9(25) | -6,8 | -1,9 | 0,0 | -0,1 | 0,0 | 0,0 |
| CO11(26) | -1,0 | 3,1 | 0,0 | 0,2 | 0,0 | 0,0 |
| CO11(27) | 0,1 | -5,0 | 0,0 | 0,6 | 0,0 | 0,0 |
| CO11(28) | -2,6 | 3,3 | 0,0 | 0,3 | 0,0 | 0,0 |
| CO11(29) | -3,3 | 3,2 | 0,0 | 0,6 | 0,0 | 0,0 |
| CO11(30) | -1,4 | 3,7 | 0,0 | 0,4 | 0,0 | 0,0 |
| CO11(32) | -0,8 | -5,0 | 0,0 | 1,0 | 0,0 | 0,0 |
| CO11(33) | 0,8 | -4,7 | 0,0 | 0,9 | 0,0 | 0,0 |
| CO11(34) | -2,3 | 2,9 | 0,1 | 0,6 | 0,0 | 0,0 |
| CO11(35) | -3,7 | 3,1 | 0,0 | 0,7 | 0,0 | 0,0 |
| CO11(15) | 1,7 | -4,6 | 0,0 | 0,5 | 0,0 | 0,0 |
| CO11(16) | -2,0 | 0,4 | 0,1 | 0,8 | 0,0 | 0,0 |
| CO11(17) | -0,4 | -4,2 | 0,0 | 0,8 | 0,0 | 0,0 |
| CO11(18) | -1,6 | 2,3 | 0,1 | 0,6 | 0,0 | 0,0 |
| CO11(20) | -0,7 | -4,4 | 0,0 | 1,0 | 0,0 | 0,0 |
| CO11(22) | -0,4 | -3,0 | 0,0 | 0,9 | 0,0 | 0,0 |
| CO11(3) | -3,9 | 1,9 | 0,1 | 0,8 | 0,0 | 0,0 |
| CO11(4) | -0,7 | -0,7 | 0,0 | 0,5 | 0,0 | 0,0 |
| CO11(7) | 0,0 | -3,6 | 0,0 | 0,8 | 0,0 | 0,0 |
| CO11(8) | -0,4 | -5,1 | 0,0 | 0,8 | 0,0 | 0,0 |
| CO11(9) | -1,4 | -0,9 | 0,1 | 0,7 | 0,0 | 0,0 |

## Nachweis

### Übersicht

| Name | Wert | Nachweisstatus |
|---|---|---|
| Berechnung | 100,0% | OK |
| Platten | 0,1 < 5,0% | OK |
| Schrauben | 71,7 < 100% | OK |
| Schweißnähte | 58,9 < 100% | OK |
| Beulen | Nicht berechnet | |

## Platten

| Name | Material | $t_p$ [mm] | Lasten | $\sigma_{Ed}$ [MPa] | $\varepsilon_{Pl}$ [%] | $\sigma_{c,Ed}$ [MPa] | Status |
|---|---|---|---|---|---|---|---|
| 136-bfl 1 | S 355 | 8,0 | CO11(22) | 47,7 | 0,0 | 0,0 | OK |
| 136-tfl 1 | S 355 | 8,0 | CO11(45) | 49,5 | 0,0 | 0,0 | OK |
| 136-w 1 | S 355 | 5,3 | CO11(45) | 185,4 | 0,0 | 10,5 | OK |
| 48-bfl 1 | Baustahl S 355 | 10,7 | CO11(7) | 257,9 | 0,0 | 0,0 | OK |
| 48-tfl 1 | Baustahl S 355 | 10,7 | CO9(25) | 355,2 | 0,1 | 26,7 | OK |
| 48-w 1 | Baustahl S 355 | 7,1 | CO11(7) | 233,9 | 0,0 | 0,0 | OK |
| 122-bfl 1 | Baustahl S 355 | 10,0 | CO11(36) | 213,6 | 0,0 | 0,0 | OK |
| 122-tfl 1 | Baustahl S 355 | 10,0 | CO9(25) | 245,3 | 0,0 | 0,0 | OK |
| 122-w 1 | Baustahl S 355 | 6,5 | CO9(25) | 123,8 | 0,0 | 0,0 | OK |
| 135-bfl 1 | S 355 | 8,0 | CO11(22) | 72,6 | 0,0 | 0,0 | OK |
| 135-tfl 1 | S 355 | 8,0 | CO11(22) | 73,5 | 0,0 | 0,0 | OK |
| 135-w 1 | S 355 | 5,3 | CO11(3) | 211,7 | 0,0 | 11,9 | OK |
| Stirnblech1 | S 355 | 15,0 | CO9(25) | 263,0 | 0,0 | 36,4 | OK |
| Rippe1a | S 355 | 10,0 | CO11(16) | 110,4 | 0,0 | 0,0 | OK |
| Rippe1b | S 355 | 10,0 | CO11(16) | 100,8 | 0,0 | 0,0 | OK |
| Rippe1c | S 355 | 10,0 | CO9(25) | 183,9 | 0,0 | 0,0 | OK |
| Rippe1d | S 355 | 10,0 | CO9(25) | 183,4 | 0,0 | 0,0 | OK |
| Fahnenblech1 | S 355 | 10,0 | CO11(45) | 238,1 | 0,0 | 13,3 | OK |
| Fahnenblech2 | S 355 | 10,0 | CO11(38) | 179,5 | 0,0 | 15,1 | OK |

**Bemessungsdaten**

| Material | $f_y$ [MPa] | $\varepsilon_{lim}$ [%] |
|---|---|---|
| S 355 | 355,0 | 5,0 |
| Baustahl S 355 | 355,0 | 5,0 |

**Erläuterung von Symbolen**

| | |
|---|---|
| $t_p$ | Plattendicke |
| $\sigma_{Ed}$ | Vergleichsspannung |
| $\varepsilon_{Pl}$ | Plastische Dehnung |
| $\sigma_{c,Ed}$ | Kontaktspannung |
| $f_y$ | Streckgrenze |
| $\varepsilon_{lim}$ | Grenzwert plastische Dehnung |

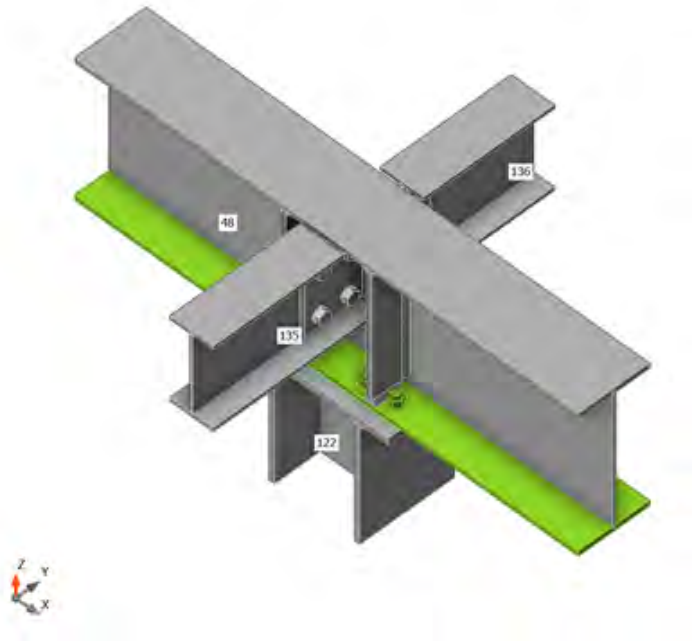


*Gesamt, CO9(25)*

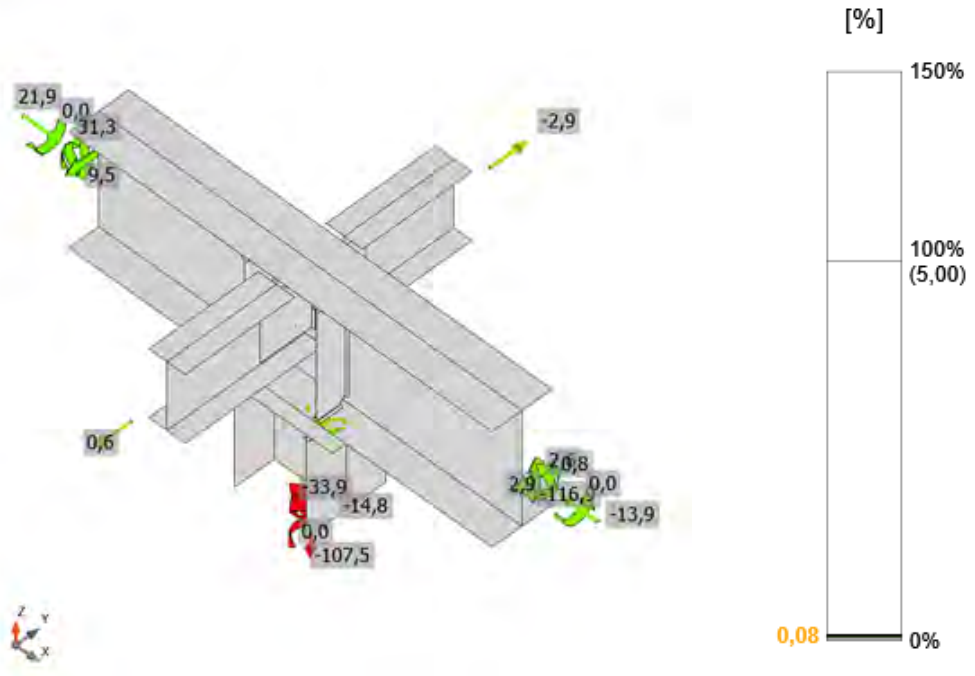


*Dehnung, CO9(25)*

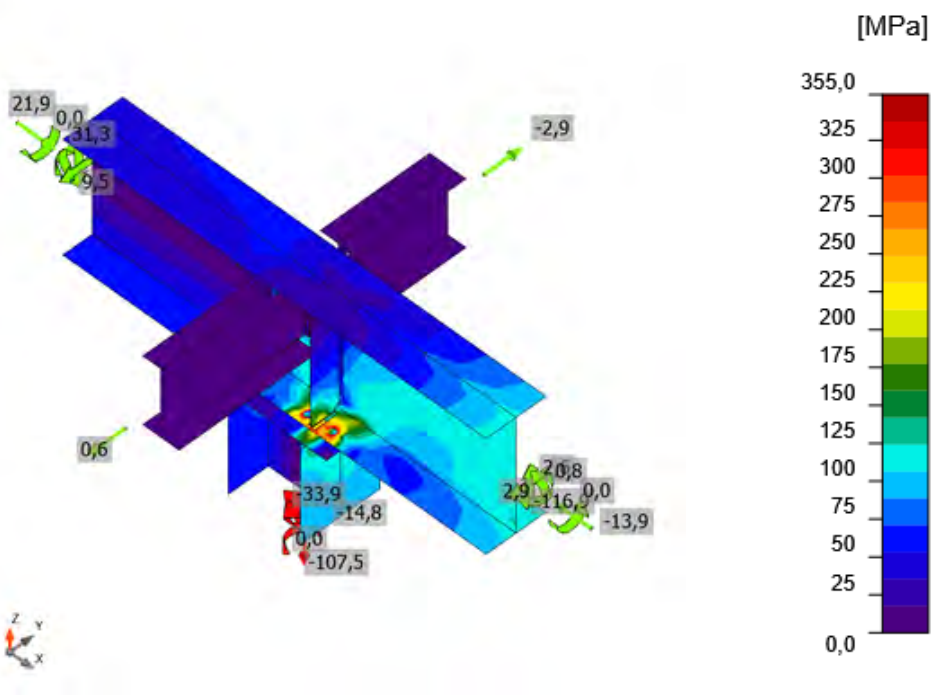


*Vergleichsspannung, CO9(25)*

## Schrauben

| Form | Position | Klasse | Lasten | $F_{t,Ed}$ [kN] | $F_{v,Ed}$ [kN] | $F_{b,Rd}$ [kN] | $Ut_t$ [%] | $Ut_s$ [%] | $Ut_{ts}$ [%] | Konstruktionsregeln | Status |
|---|---|---|---|---|---|---|---|---|---|---|---|
| 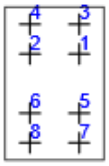 | B1 | M16 8.8 - 1 | CO9(25) | 62,4 | 1,1 | 68,0 | 69,0 | 1,9 | 51,2 | OK | OK |
| | B2 | M16 8.8 - 1 | CO9(25) | 62,2 | 0,9 | 68,1 | 68,7 | 1,6 | 50,7 | OK | OK |
| | B3 | M16 8.8 - 1 | CO9(25) | 64,8 | 1,3 | 69,1 | 71,7 | 2,1 | 53,3 | OK | OK |
| | B4 | M16 8.8 - 1 | CO9(25) | 64,8 | 0,9 | 68,9 | 71,6 | 1,5 | 52,6 | OK | OK |
| | B5 | M16 8.8 - 1 | CO11(22) | 0,0 | 3,0 | 129,9 | 0,0 | 5,0 | 5,0 | OK | OK |
| | B6 | M16 8.8 - 1 | CO11(36) | 0,0 | 3,1 | 155,6 | 0,0 | 5,2 | 5,2 | OK | OK |
| | B7 | M16 8.8 - 1 | CO11(16) | 0,0 | 6,9 | 148,3 | 0,0 | 11,5 | 11,5 | OK | OK |
| | B8 | M16 8.8 - 1 | CO11(36) | 0,1 | 7,2 | 148,4 | 0,1 | 11,9 | 12,0 | OK | OK |
| 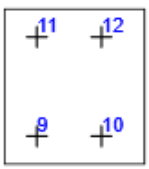 | B9 | M16 8.8 - 2 | CO11(3) | 2,5 | 17,5 | 71,2 | 2,7 | 29,1 | 31,0 | OK | OK |
| | B10 | M16 8.8 - 2 | CO11(3) | 1,4 | 9,7 | 77,6 | 1,5 | 16,1 | 17,2 | OK | OK |
| | B11 | M16 8.8 - 2 | CO11(46) | 2,7 | 17,8 | 52,1 | 3,0 | 34,2 | 31,7 | OK | OK |
| | B12 | M16 8.8 - 2 | CO11(46) | 3,2 | 10,2 | 31,3 | 3,6 | 32,6 | 19,5 | OK | OK |
| 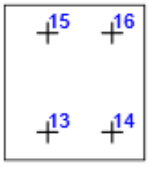 | B13 | M16 8.8 - 2 | CO11(37) | 1,4 | 9,8 | 71,6 | 1,6 | 16,2 | 17,4 | OK | OK |
| | B14 | M16 8.8 - 2 | CO11(37) | 2,3 | 16,4 | 71,0 | 2,5 | 27,2 | 29,0 | OK | OK |
| | B15 | M16 8.8 - 2 | CO11(45) | 3,1 | 10,2 | 35,5 | 3,5 | 28,6 | 19,3 | OK | OK |
| | B16 | M16 8.8 - 2 | CO11(45) | 2,3 | 16,5 | 52,1 | 2,5 | 31,6 | 29,1 | OK | OK |

**Bemessungsdaten**

| Klasse | $F_{t,Rd}$ [kN] | $B_{p,Rd}$ [kN] | $F_{v,Rd}$ [kN] |
|---|---|---|---|
| M16 8.8 - 1 | 90,4 | 200,6 | 60,3 |
| M16 8.8 - 2 | 90,4 | 99,4 | 60,3 |

**Erläuterung von Symbolen**

| | |
|---|---|
| $F_{t,Ed}$ | Zugkraft |
| $F_{v,Ed}$ | Resultierende der Schraubenscherkräfte Vy und Vz in Scherebenen |
| $F_{b,Rd}$ | Lochleibungstragfähigkeit der Platte nach EN 1993-1-8 Tab. 3.4 |
| $Ut_t$ | Ausnutzung unter Zug |
| $Ut_s$ | Ausnutzung unter Schub |
| $Ut_{ts}$ | Interaktion von Zug und Schub EN_1993-1-8 Tabelle 3.4 |
| $F_{t,Rd}$ | Zugtragfähigkeit der Schraube nach EN 1993-1-8 Tabelle 3.4 |
| $B_{p,Rd}$ | Durchstanztragfähigkeit nach EN 1993-1-8 Tabelle 3.4 |
| $F_{v,Rd}$ | Schertragfähigkeit der Schraube nach EN 1993-1-8 Tabelle 3.4 |

## Schweißnähte

| Position | Kante | $T_w$ [mm] | L [mm] | Lasten | $\sigma_{w,Ed}$ [MPa] | $\varepsilon_{Pl}$ [%] | $\sigma_{\perp}$ [MPa] | $\tau_{\perp}$ [MPa] | $\tau_{\parallel}$ [MPa] | Ut [%] | $Ut_c$ [%] | Konstruktionsregeln | Status |
|---|---|---|---|---|---|---|---|---|---|---|---|---|---|
| Stirnblech1 | 122-bfl 1 | ◢ 6,0 ◣ | 199 | CO11(16) | 200,7 | 0,0 | -68,4 | -108,7 | -7,1 | 46,1 | 24,0 | OK | OK |
| | | ◢ 6,0 ◣ | 199 | CO11(36) | 224,5 | 0,0 | -141,6 | 99,9 | 11,9 | 51,6 | 27,8 | OK | OK |
| Stirnblech1 | 122-tfl 1 | ◢ 6,0 ◣ | 199 | CO9(25) | 225,5 | 0,0 | 114,7 | 107,1 | -33,1 | 51,8 | 31,9 | OK | OK |
| | | ◢ 6,0 ◣ | 199 | CO9(25) | 174,0 | 0,0 | 77,3 | -85,0 | 29,6 | 40,0 | 25,1 | OK | OK |
| Stirnblech1 | 122-w 1 | ◢ 6,0 ◣ | 179 | CO9(25) | 87,8 | 0,0 | 2,3 | 1,8 | -50,7 | 20,2 | 14,6 | OK | OK |
| | | ◢ 6,0 ◣ | 179 | CO9(25) | 86,2 | 0,0 | 1,2 | -1,8 | 49,7 | 19,8 | 14,5 | OK | OK |
| 48-bfl 1 | Rippe1a | ◢ 6,0 ◣ | 56 | CO11(16) | 43,9 | 0,0 | -12,4 | -10,9 | -21,7 | 10,1 | 9,2 | OK | OK |
| | | ◢ 6,0 ◣ | 56 | CO11(16) | 41,0 | 0,0 | -9,7 | 11,2 | 20,1 | 9,4 | 9,0 | OK | OK |
| 48-w 1 | Rippe1a | ◢ 6,0 ◣ | 248 | CO11(16) | 63,7 | 0,0 | -16,2 | -14,9 | 32,3 | 14,6 | 9,3 | OK | OK |
| | | ◢ 6,0 ◣ | 248 | CO11(16) | 59,9 | 0,0 | -15,5 | 16,9 | -28,8 | 13,7 | 9,4 | OK | OK |
| 48-tfl 1 | Rippe1a | ◢ 6,0 ◣ | 56 | CO11(16) | 110,7 | 0,0 | -53,0 | -55,3 | -9,1 | 25,4 | 21,8 | OK | OK |
| | | ◢ 6,0 ◣ | 56 | CO11(22) | 108,5 | 0,0 | -55,0 | 52,1 | 14,1 | 24,9 | 21,3 | OK | OK |
| 48-bfl 1 | Rippe1b | ◢ 6,0 ◣ | 56 | CO11(43) | 36,5 | 0,0 | -11,8 | -10,3 | -17,1 | 8,4 | 8,4 | OK | OK |
| | | ◢ 6,0 ◣ | 56 | CO11(16) | 34,1 | 0,0 | -9,7 | 10,8 | 15,5 | 7,8 | 7,8 | OK | OK |
| 48-w 1 | Rippe1b | ◢ 6,0 ◣ | 248 | CO11(16) | 56,5 | 0,0 | -17,7 | -16,1 | 26,4 | 13,0 | 9,1 | OK | OK |
| | | ◢ 6,0 ◣ | 248 | CO11(16) | 53,3 | 0,0 | -16,5 | 18,0 | -23,1 | 12,2 | 9,2 | OK | OK |
| 48-tfl 1 | Rippe1b | ◢ 6,0 ◣ | 56 | CO11(16) | 102,0 | 0,0 | -47,9 | -50,6 | -11,9 | 23,4 | 18,7 | OK | OK |
| | | ◢ 6,0 ◣ | 56 | CO11(16) | 90,1 | 0,0 | -46,6 | 43,9 | 7,2 | 20,7 | 16,4 | OK | OK |
| 48-bfl 1 | Rippe1c | ◢ 6,0 ◣ | 56 | CO11(16) | 31,1 | 0,0 | 3,1 | 3,1 | 17,6 | 7,1 | 6,3 | OK | OK |

| Position | Kante | $T_w$ [mm] | L [mm] | Lasten | $\sigma_{w,Ed}$ [MPa] | $\varepsilon_{Pl}$ [%] | $\sigma_{\perp}$ [MPa] | $\tau_{\perp}$ [MPa] | $\tau_{\parallel}$ [MPa] | Ut [%] | $Ut_c$ [%] | Konstruktionsregeln | Status |
|---|---|---|---|---|---|---|---|---|---|---|---|---|---|
| | | ◢ 6,0 ◣ | 56 | CO11(24) | 30,5 | 0,0 | -8,1 | 7,2 | 15,4 | 7,0 | 7,0 | OK | OK |
| 48-w 1 | Rippe1c | ◢ 6,0 ◣ | 248 | CO9(25) | 87,1 | 0,0 | 3,1 | 3,9 | -50,1 | 20,0 | 14,8 | OK | OK |
| | | ◢ 6,0 ◣ | 248 | CO9(25) | 88,9 | 0,0 | 5,5 | -4,6 | 51,0 | 20,4 | 15,0 | OK | OK |
| 48-tfl 1 | Rippe1c | ◢ 6,0 ◣ | 56 | CO9(25) | 247,4 | 0,0 | 118,7 | 116,6 | 45,9 | 56,8 | 42,8 | OK | OK |
| | | ◢ 6,0 ◣ | 56 | CO9(25) | 240,1 | 0,0 | 112,5 | -114,6 | -43,2 | 55,1 | 41,3 | OK | OK |
| 48-bfl 1 | Rippe1d | ◢ 6,0 ◣ | 56 | CO11(36) | 32,6 | 0,0 | 3,3 | 2,4 | 18,5 | 7,5 | 6,4 | OK | OK |
| | | ◢ 6,0 ◣ | 56 | CO11(43) | 31,9 | 0,0 | -1,6 | 0,4 | -18,4 | 7,3 | 6,8 | OK | OK |
| 48-w 1 | Rippe1d | ◢ 6,0 ◣ | 248 | CO9(25) | 87,2 | 0,0 | 5,5 | 4,5 | -50,1 | 20,0 | 14,9 | OK | OK |
| | | ◢ 6,0 ◣ | 248 | CO9(25) | 88,4 | 0,0 | 3,5 | -4,5 | 50,8 | 20,3 | 15,0 | OK | OK |
| 48-tfl 1 | Rippe1d | ◢ 6,0 ◣ | 56 | CO9(25) | 239,6 | 0,0 | 112,5 | 114,5 | 42,3 | 55,0 | 41,5 | OK | OK |
| | | ◢ 6,0 ◣ | 56 | CO9(25) | 244,2 | 0,0 | 117,1 | -115,2 | -45,0 | 56,1 | 42,5 | OK | OK |
| 48-w 1 | Fahnenblech1 | ◢ 6,0 ◣ | 143 | CO11(3) | 256,4 | 0,0 | -133,1 | -114,4 | -54,1 | 58,9 | 38,9 | OK | OK |
| | | ◢ 6,0 ◣ | 143 | CO11(43) | 239,4 | 0,0 | -94,5 | 111,4 | 61,0 | 55,0 | 35,9 | OK | OK |
| 48-w 1 | Fahnenblech2 | ◢ 6,0 ◣ | 142 | CO11(43) | 205,0 | 0,0 | -104,9 | -98,8 | 23,9 | 47,1 | 29,3 | OK | OK |
| | | ◢ 6,0 ◣ | 142 | CO11(38) | 190,5 | 0,0 | -84,7 | 94,0 | -29,3 | 43,7 | 28,4 | OK | OK |

**Bemessungsdaten**

| Material | $f_u$ [MPa] | $\beta_w$ [-] | $\sigma_{w,Rd}$ [MPa] | 0.9 σ [MPa] |
|---|---|---|---|---|
| S 355 | 490,0 | 0,90 | 435,6 | 352,8 |

**Erläuterung von Symbolen**

| | |
|---|---|
| $T_w$ | Nahtdicke a |
| L | Länge |
| $\sigma_{w,Ed}$ | Vergleichsspannung |
| $\varepsilon_{Pl}$ | Dehnung |
| $\sigma_{\perp}$ | Senkrechte Spannung |
| $\tau_{\perp}$ | Scherspannung senkrecht zur Schweißnahtachse |
| $\tau_{\parallel}$ | Scherspannung parallel zur Schweißnahtachse |
| Ut | Ausnutzung |
| $Ut_c$ | Schätzung der Schweißnahtkapazität |
| ◢ | Kehlnaht |
| $f_u$ | Grenzfestigkeit der Schweißnaht |
| $\beta_w$ | Korrelationsfaktor nach EN 1993-1-8 Tab. 4.1 |
| $\sigma_{w,Rd}$ | Tragfähigkeit der Schweißnaht |
| 0.9 σ | Senkrechter Spannungswiderstand - 0.9*fu / γM2 |

### Beulen

**Die Beulanalyse wurde nicht berechnet.**

## Normeinstellungen

| Position | Wert | Einheit | Bezug |
|---|---|---|---|
| Sicherheitsfaktor $\gamma_{M0}$ | 1,00 | - | EN 1993-1-1 – 6.1 |
| Sicherheitsfaktor $\gamma_{M1}$ | 1,00 | - | EN 1993-1-1 – 6.1 |
| Sicherheitsfaktor $\gamma_{M2}$ | 1,25 | - | EN 1993-1-1 – 6.1 |
| Sicherheitsfaktor $\gamma_{M3}$ | 1,25 | - | EN 1993-1-8 – Table 2.1 |
| Sicherheitsfaktor $\gamma_C$ | 1,50 | - | EN 1992-1-1 – 2.4.2.4 |
| Sicherheitsfaktor $\gamma_{Inst}$ | 1,20 | - | EN 1992-4 – Table 4.1 |
| Verbindungskoeffizient βj | 0,67 | - | EN 1993-1-8 – 6.2.5(7) |
| Wirksame Fläche - Einfluss der Netzgröße | 0,10 | - | |
| Reibungsbeiwert - Beton | 0,25 | - | EN 1993-1-8 |
| Reibungskoeffizient bei gleitfesten Verbindungen | 0,30 | - | EN 1993-1-8 – Table 3.7 |
| Plastische Dehnung - Grenzwert | 0,05 | - | EN 1993-1-5 |
| Konstruktionsregeln | Ja | | |
| Distance between bolts [d0] | 2,20 | - | EN 1993-1-8 – Table 3.3 |
| Distance between bolts and edge [d0] | 1,20 | - | EN 1993-1-8 – Table 3.3 |
| Nachweis der Tragfähigkeit bei Betonausbruch | Beide | | |
| Berechnetes αb für Lochleibungsnachweis anwenden. | Ja | | EN 1993-1-8 – Table 3.4 |
| Gerissener Beton | Ja | | EN 1992-4 |
| Überprüfen der lokalen Verformung | Ja | | |
| Lokale Verformung - Grenzwert | 0,03 | - | CIDECT DG 1, 3 – 1.1 |
| Geometrische Nichtlinearität (GMNA) | Ja | | Analyse mit großen Verformungen für Verbindungen mit Hohlprofilen |
| Ausgesteiftes System | Nein | | EN 1993-1-8 – 5.2.2.5 |

| | |
|---|---|
| **Projekt:** | **IdeaStatiCa-Stadion_Fazanerija_JK-6_BR - 290** |
| **Projektnummer:** | **Detajl D3-O5** |
| **Autor:** | **mag. Igor Gorup dipl. ing.** |

## Projektdaten

| | |
|---|---|
| Projektname | IdeaStatiCa-Stadion_Fazanerija_JK-6_BR - 290 |
| Projektnummer | Detajl D3-O5 |
| Autor | mag. Igor Gorup dipl. ing. |
| Beschreibung | |
| Datum | 18.06.2025 |
| Norm | EN |

## Material

| | |
|---|---|
| Stahl | Baustahl S 355, Baustahl S 235, S 355 |

# Projektposition 290

## Bemessung

| | |
|---|---|
| Name | 290 |
| Beschreibung | |
| Berechnung | Spannung, Dehnung/ Lasten im Gleichgewicht |

### Bauteile

#### Geometrie

| Name | Querschnitt | β – Rotation [°] | Y - Rotation [°] | α - Rotation [°] | Abstand ex [mm] | Abstand ey [mm] | Abstand ez [mm] |
|---|---|---|---|---|---|---|---|
| 135 | 697 - IPE180 | -90,0 | 0,0 | -180,0 | 0 | 0 | -30 |
| 46 | 24 - IPE240 | 0,0 | 0,0 | -180,0 | 0 | 0 | 0 |
| 131 | 12 - HEA200 | 0,0 | 90,0 | -180,0 | 0 | 0 | 0 |
| 137 | 697 - IPE180 | -90,0 | 0,0 | -180,0 | 0 | 0 | -30 |

#### Auflager und Kräfte

| Name | Auflager | Kräfte in | X [mm] |
|---|---|---|---|
| 135 / anfang | Mx-My-Mz | Schrauben | 73 |
| 46 / anfang | | Position | 0 |
| 46 / ende | | Position | 0 |
| 131 / anfang | N-Vy-Vz-Mx-My-Mz | Position | 0 |
| 137 / ende | | Position | 0 |

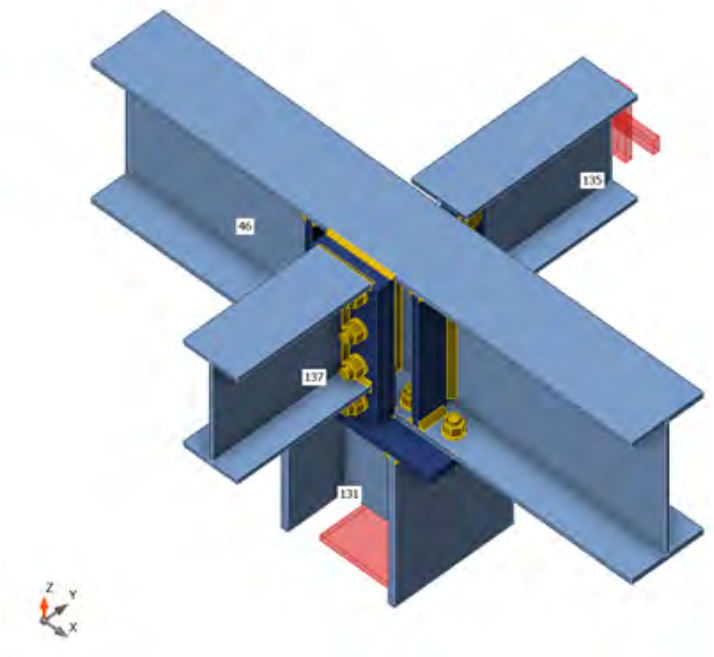


### Querschnitte

| Name | Material |
|---|---|
| 697 - IPE180 | S 355 |
| 24 - IPE240 | Baustahl S 355 |
| 12 - HEA200 | Baustahl S 355 |

## Schrauben

| Name | Durchmesser [mm] | $f_y$ [MPa] | $f_u$ [MPa] | Bruttofläche [$mm^2$] |
|---|---|---|---|---|
| M16 8.8 | 16 | 640,0 | 800,0 | 201 |

## Lasteinwirkungen (Kräfte im Gleichgewicht)

| Name | Bauteil | N [kN] | Vy [kN] | Vz [kN] | Mx [kNm] | My [kNm] | Mz [kNm] |
|---|---|---|---|---|---|---|---|
| CO11(31) | 135 / Anfang | -0,2 | 0,0 | 19,8 | 0,0 | 0,0 | 0,0 |
| | 46 / Anfang | 0,3 | 0,0 | 28,2 | 0,0 | 31,4 | 0,0 |
| | 46 / Ende | 1,2 | 0,0 | 20,7 | 0,0 | -29,9 | 0,0 |
| | 131 / Anfang | 102,4 | 6,2 | 0,5 | 0,0 | -1,5 | -20,0 |
| | 137 / Ende | -2,8 | 0,1 | 33,7 | 0,0 | -20,0 | 0,1 |
| CO11(32) | 135 / Anfang | -1,7 | 0,1 | 37,9 | 0,0 | 0,0 | 0,0 |
| | 46 / Anfang | 0,6 | 1,3 | 54,8 | 0,0 | 64,5 | -1,5 |
| | 46 / Ende | -1,8 | 0,8 | 35,9 | -0,1 | -49,8 | 1,1 |
| | 131 / Anfang | 169,8 | 2,0 | -3,4 | -0,3 | -14,8 | -22,6 |
| | 137 / Ende | 2,2 | 0,1 | 40,9 | 0,0 | -22,7 | 0,1 |
| CO11(33) | 135 / Anfang | -1,0 | 0,1 | 37,9 | 0,0 | 0,0 | 0,0 |
| | 46 / Anfang | 0,7 | 0,4 | 54,2 | 0,0 | 62,4 | -0,5 |
| | 46 / Ende | 1,0 | 0,3 | 37,4 | 0,0 | -52,8 | 0,4 |
| | 131 / Anfang | 181,3 | 7,3 | -1,4 | 0,0 | -9,6 | -29,8 |
| | 137 / Ende | -2,0 | 0,2 | 51,9 | 0,0 | -29,9 | 0,1 |
| CO11(34) | 135 / Anfang | -0,8 | 0,0 | 19,8 | 0,0 | 0,0 | 0,0 |
| | 46 / Anfang | 0,0 | 0,4 | 28,8 | 0,0 | 33,7 | -0,5 |
| | 46 / Ende | -1,5 | 0,3 | 19,2 | -0,1 | -26,7 | 0,4 |
| | 131 / Anfang | 85,1 | 0,2 | -1,6 | -0,1 | -7,0 | -9,0 |
| | 137 / Ende | 1,3 | 0,0 | 17,2 | 0,0 | -9,1 | 0,0 |
| CO11(35) | 135 / Anfang | -1,3 | 0,1 | 37,9 | 0,0 | 0,0 | 0,0 |
| | 46 / Anfang | 1,1 | 0,7 | 54,3 | 0,0 | 62,7 | -0,8 |
| | 46 / Ende | 0,3 | 0,5 | 37,2 | -0,1 | -52,5 | 0,7 |
| | 131 / Anfang | 191,2 | 7,7 | -1,6 | 0,0 | -10,1 | -36,3 |
| | 137 / Ende | -0,4 | 0,2 | 61,7 | 0,0 | -36,4 | 0,1 |
| CO11(36) | 135 / Anfang | -1,5 | 0,1 | 37,9 | 0,0 | 0,0 | 0,0 |
| | 46 / Anfang | 1,7 | 0,9 | 55,2 | 0,0 | 66,1 | -1,0 |
| | 46 / Ende | 0,5 | 0,5 | 34,9 | -0,1 | -47,4 | 0,7 |
| | 131 / Anfang | 189,3 | 7,2 | -4,7 | -0,2 | -18,6 | -36,0 |
| | 137 / Ende | -0,3 | 0,2 | 61,2 | 0,0 | -36,1 | 0,1 |
| CO9(37) | 135 / Anfang | -0,6 | 0,0 | 0,0 | 0,0 | 0,0 | 0,0 |
| | 46 / Anfang | 2,1 | 0,0 | 2,7 | 0,0 | 9,4 | 0,0 |
| | 46 / Ende | 0,7 | 0,0 | -6,4 | 0,0 | 13,7 | 0,0 |
| | 131 / Anfang | -2,9 | 0,7 | -8,9 | 0,0 | -23,0 | -0,5 |
| | 137 / Ende | 0,4 | 0,0 | 0,7 | 0,0 | -0,5 | 0,0 |
| CO10(38) | 135 / Anfang | -0,6 | 0,0 | 26,2 | 0,0 | 0,0 | 0,0 |
| | 46 / Anfang | 1,1 | 0,0 | 38,1 | 0,0 | 45,2 | 0,0 |
| | 46 / Ende | -0,3 | 0,0 | 24,5 | 0,0 | -33,5 | 0,0 |
| | 131 / Anfang | 122,5 | 5,1 | -3,2 | 0,0 | -11,7 | -19,2 |
| | 137 / Ende | 0,5 | 0,0 | 33,8 | 0,0 | -19,3 | 0,0 |
| CO11(39) | 135 / Anfang | -1,5 | 0,2 | 42,7 | 0,0 | 0,0 | 0,0 |
| | 46 / Anfang | 1,0 | 0,8 | 61,1 | 0,0 | 70,9 | -0,9 |
| | 46 / Ende | 0,3 | 0,5 | 41,5 | -0,1 | -58,3 | 0,7 |
| | 131 / Anfang | 204,1 | 7,0 | -2,2 | 0,0 | -12,6 | -33,8 |
| | 137 / Ende | -0,4 | 0,2 | 58,8 | 0,0 | -33,9 | 0,1 |
| CO11(40) | 135 / Anfang | -1,5 | 0,1 | 42,7 | 0,0 | 0,0 | 0,0 |
| | 46 / Anfang | 1,5 | 0,8 | 62,0 | 0,0 | 74,2 | -0,9 |
| | 46 / Ende | 0,5 | 0,5 | 39,2 | -0,1 | -53,4 | 0,7 |

| Name | Bauteil | N [kN] | Vy [kN] | Vz [kN] | Mx [kNm] | My [kNm] | Mz [kNm] |
|---|---|---|---|---|---|---|---|
| | 131 / Anfang | 196,4 | 5,8 | -5,2 | -0,2 | -20,8 | -29,7 |
| | 137 / Ende | -0,3 | 0,2 | 52,4 | 0,0 | -29,7 | 0,1 |
| CO11(41) | 135 / Anfang | -0,8 | 0,0 | 19,8 | 0,0 | 0,0 | 0,0 |
| | 46 / Anfang | 0,8 | 0,3 | 28,5 | 0,0 | 32,7 | -0,4 |
| | 46 / Ende | -0,4 | 0,2 | 19,9 | 0,0 | -28,1 | 0,3 |
| | 131 / Anfang | 109,9 | 5,7 | -0,6 | 0,0 | -4,6 | -25,1 |
| | 137 / Ende | 0,6 | 0,0 | 41,6 | 0,0 | -25,2 | 0,0 |
| CO11(42) | 135 / Anfang | -0,8 | 0,1 | 26,7 | 0,0 | 0,0 | 0,0 |
| | 46 / Anfang | 0,8 | 0,4 | 38,4 | 0,0 | 43,8 | -0,5 |
| | 46 / Ende | 0,4 | 0,3 | 27,1 | 0,0 | -38,4 | 0,4 |
| | 131 / Anfang | 147,0 | 7,8 | -0,5 | 0,0 | -5,3 | -33,0 |
| | 137 / Ende | -0,9 | 0,1 | 54,8 | 0,0 | -33,1 | 0,1 |
| CO11(43) | 135 / Anfang | -1,7 | 0,1 | 37,9 | 0,0 | 0,0 | 0,0 |
| | 46 / Anfang | 1,9 | 1,1 | 55,5 | 0,0 | 66,9 | -1,3 |
| | 46 / Ende | -0,4 | 0,7 | 34,3 | -0,1 | -46,2 | 0,9 |
| | 131 / Anfang | 186,1 | 5,8 | -5,5 | -0,3 | -20,7 | -34,0 |
| | 137 / Ende | 1,8 | 0,1 | 58,3 | 0,0 | -34,1 | 0,1 |
| CO11(44) | 135 / Anfang | -0,7 | 0,1 | 31,0 | 0,0 | 0,0 | 0,0 |
| | 46 / Anfang | 1,0 | 0,3 | 44,9 | 0,0 | 53,5 | -0,3 |
| | 46 / Ende | 1,3 | 0,2 | 28,7 | 0,0 | -39,2 | 0,2 |
| | 131 / Anfang | 145,6 | 6,0 | -3,6 | 0,0 | -14,3 | -23,5 |
| | 137 / Ende | -2,2 | 0,2 | 41,1 | 0,0 | -23,6 | 0,1 |
| CO11(25) | 135 / Anfang | -0,7 | 0,0 | 19,8 | 0,0 | 0,0 | 0,0 |
| | 46 / Anfang | -0,5 | 0,4 | 28,0 | 0,0 | 30,8 | -0,5 |
| | 46 / Ende | -1,8 | 0,3 | 21,3 | 0,0 | -31,1 | 0,5 |
| | 131 / Anfang | 93,4 | 1,5 | 1,2 | 0,0 | 0,3 | -13,7 |
| | 137 / Ende | 1,2 | 0,0 | 24,3 | 0,0 | -13,8 | 0,0 |
| CO11(26) | 135 / Anfang | -0,2 | 0,0 | 19,8 | 0,0 | 0,0 | 0,0 |
| | 46 / Anfang | 0,2 | 0,1 | 28,2 | 0,0 | 31,5 | -0,1 |
| | 46 / Ende | 1,2 | 0,0 | 20,6 | 0,0 | -29,6 | 0,1 |
| | 131 / Anfang | 103,1 | 6,2 | 0,4 | 0,0 | -1,9 | -20,5 |
| | 137 / Ende | -2,7 | 0,1 | 34,5 | 0,0 | -20,5 | 0,1 |
| CO11(27) | 135 / Anfang | -1,0 | 0,1 | 37,9 | 0,0 | 0,0 | 0,0 |
| | 46 / Anfang | 0,8 | 0,5 | 54,2 | 0,0 | 62,2 | -0,6 |
| | 46 / Ende | 1,0 | 0,3 | 37,5 | 0,0 | -53,1 | 0,5 |
| | 131 / Anfang | 187,3 | 8,0 | -1,2 | 0,0 | -9,1 | -33,7 |
| | 137 / Ende | -1,9 | 0,2 | 57,8 | 0,0 | -33,8 | 0,1 |
| CO11(29) | 135 / Anfang | -0,6 | 0,1 | 26,7 | 0,0 | 0,0 | 0,0 |
| | 46 / Anfang | 0,5 | 0,3 | 38,3 | 0,0 | 43,3 | -0,3 |
| | 46 / Ende | 1,0 | 0,2 | 27,3 | 0,0 | -39,0 | 0,3 |
| | 131 / Anfang | 143,2 | 8,0 | -0,1 | 0,0 | -4,3 | -30,4 |
| | 137 / Ende | -2,3 | 0,2 | 50,9 | 0,0 | -30,5 | 0,1 |
| CO11(30) | 135 / Anfang | -1,9 | 0,1 | 42,7 | 0,0 | 0,0 | 0,0 |
| | 46 / Anfang | 1,1 | 1,4 | 61,9 | 0,0 | 73,6 | -1,6 |
| | 46 / Ende | -1,3 | 0,9 | 39,7 | -0,1 | -54,4 | 1,2 |
| | 131 / Anfang | 192,8 | 3,2 | -4,7 | -0,3 | -19,1 | -27,0 |
| | 137 / Ende | 2,2 | 0,1 | 48,4 | 0,0 | -27,1 | 0,1 |
| CO11(14) | 135 / Anfang | -0,6 | 0,0 | 19,8 | 0,0 | 0,0 | 0,0 |
| | 46 / Anfang | -0,6 | 0,4 | 28,0 | 0,0 | 30,8 | -0,4 |
| | 46 / Ende | -1,8 | 0,3 | 21,2 | 0,0 | -30,9 | 0,4 |

| Name | Bauteil | N [kN] | Vy [kN] | Vz [kN] | Mx [kNm] | My [kNm] | Mz [kNm] |
|---|---|---|---|---|---|---|---|
| | 131 / Anfang | 87,5 | 0,6 | 1,1 | 0,0 | 0,1 | -9,9 |
| | 137 / Ende | 1,2 | 0,0 | 18,5 | 0,0 | -9,9 | 0,0 |
| CO11(17) | 135 / Anfang | -1,8 | 0,1 | 42,7 | 0,0 | 0,0 | 0,0 |
| | 46 / Anfang | 1,8 | 1,0 | 62,3 | 0,0 | 75,0 | -1,2 |
| | 46 / Ende | -0,4 | 0,6 | 38,7 | -0,1 | -52,2 | 0,8 |
| | 131 / Anfang | 192,4 | 4,5 | -6,0 | -0,3 | -22,8 | -27,2 |
| | 137 / Ende | 1,6 | 0,1 | 48,7 | 0,0 | -27,2 | 0,1 |
| CO11(18) | 135 / Anfang | -1,7 | 0,1 | 37,9 | 0,0 | 0,0 | 0,0 |
| | 46 / Anfang | 1,2 | 1,3 | 55,1 | 0,0 | 65,5 | -1,5 |
| | 46 / Ende | -1,3 | 0,8 | 35,3 | -0,1 | -48,4 | 1,1 |
| | 131 / Anfang | 179,8 | 3,9 | -4,2 | -0,3 | -17,1 | -29,4 |
| | 137 / Ende | 2,1 | 0,1 | 51,3 | 0,0 | -29,5 | 0,1 |
| CO11(19) | 135 / Anfang | -1,7 | 0,2 | 42,7 | 0,0 | 0,0 | 0,0 |
| | 46 / Anfang | 0,5 | 1,2 | 61,0 | 0,0 | 70,5 | -1,4 |
| | 46 / Ende | -1,5 | 0,9 | 41,8 | -0,1 | -59,1 | 1,2 |
| | 131 / Anfang | 194,5 | 3,6 | -1,8 | -0,1 | -11,4 | -27,3 |
| | 137 / Ende | 2,0 | 0,2 | 48,9 | 0,0 | -27,4 | 0,1 |
| CO11(20) | 135 / Anfang | -1,6 | 0,1 | 37,9 | 0,0 | 0,0 | 0,0 |
| | 46 / Anfang | 1,1 | 1,0 | 55,1 | 0,0 | 65,6 | -1,2 |
| | 46 / Ende | -1,1 | 0,6 | 35,3 | -0,1 | -48,3 | 0,9 |
| | 131 / Anfang | 166,3 | 2,5 | -4,3 | -0,2 | -17,3 | -20,6 |
| | 137 / Ende | 1,6 | 0,1 | 38,0 | 0,0 | -20,7 | 0,1 |
| CO11(1) | 135 / Anfang | -1,9 | 0,1 | 42,7 | 0,0 | 0,0 | 0,0 |
| | 46 / Anfang | 1,8 | 1,2 | 62,3 | 0,0 | 75,0 | -1,4 |
| | 46 / Ende | -0,5 | 0,7 | 38,7 | -0,1 | -52,3 | 1,0 |
| | 131 / Anfang | 199,1 | 5,1 | -5,9 | -0,3 | -22,7 | -31,5 |
| | 137 / Ende | 1,8 | 0,2 | 55,3 | 0,0 | -31,6 | 0,1 |
| CO11(2) | 135 / Anfang | -1,4 | 0,2 | 42,7 | 0,0 | 0,0 | 0,0 |
| | 46 / Anfang | 1,0 | 0,6 | 61,1 | 0,0 | 71,0 | -0,7 |
| | 46 / Ende | 0,3 | 0,4 | 41,5 | 0,0 | -58,2 | 0,6 |
| | 131 / Anfang | 197,4 | 6,3 | -2,3 | 0,0 | -12,7 | -29,4 |
| | 137 / Ende | -0,6 | 0,2 | 52,1 | 0,0 | -29,5 | 0,1 |
| CO11(3) | 135 / Anfang | -1,4 | 0,2 | 42,7 | 0,0 | 0,0 | 0,0 |
| | 46 / Anfang | 0,9 | 0,7 | 61,2 | 0,0 | 71,1 | -0,8 |
| | 46 / Ende | 0,3 | 0,4 | 41,4 | 0,0 | -58,0 | 0,6 |
| | 131 / Anfang | 198,1 | 6,3 | -2,4 | 0,0 | -13,0 | -29,9 |
| | 137 / Ende | -0,5 | 0,2 | 52,9 | 0,0 | -30,0 | 0,1 |
| CO11(4) | 135 / Anfang | -0,4 | 0,0 | 19,8 | 0,0 | 0,0 | 0,0 |
| | 46 / Anfang | 0,5 | 0,1 | 28,3 | 0,0 | 31,8 | -0,1 |
| | 46 / Ende | 0,7 | 0,1 | 20,4 | 0,0 | -29,3 | 0,1 |
| | 131 / Anfang | 99,5 | 5,3 | 0,1 | 0,0 | -2,6 | -18,2 |
| | 137 / Ende | -1,6 | 0,1 | 31,0 | 0,0 | -18,2 | 0,0 |
| CO11(5) | 135 / Anfang | -1,6 | 0,1 | 37,9 | 0,0 | 0,0 | 0,0 |
| | 46 / Anfang | 0,4 | 1,1 | 54,8 | 0,0 | 64,5 | -1,3 |
| | 46 / Ende | -1,8 | 0,8 | 36,0 | -0,1 | -49,8 | 1,0 |
| | 131 / Anfang | 164,0 | 1,3 | -3,4 | -0,2 | -14,7 | -18,8 |
| | 137 / Ende | 2,2 | 0,1 | 35,1 | 0,0 | -18,8 | 0,0 |
| CO11(6) | 135 / Anfang | -0,5 | 0,0 | 19,8 | 0,0 | 0,0 | 0,0 |
| | 46 / Anfang | 1,1 | 0,1 | 29,2 | 0,0 | 35,1 | -0,2 |
| | 46 / Ende | 0,9 | 0,1 | 18,2 | 0,0 | -24,4 | 0,1 |

| Name | Bauteil | N [kN] | Vy [kN] | Vz [kN] | Mx [kNm] | My [kNm] | Mz [kNm] |
|---|---|---|---|---|---|---|---|
| | 131 / Anfang | 97,7 | 4,8 | -3,0 | 0,0 | -10,7 | -17,9 |
| | 137 / Ende | -1,5 | 0,1 | 30,6 | 0,0 | -17,9 | 0,0 |
| CO11(8) | 135 / Anfang | -1,8 | 0,1 | 42,7 | 0,0 | 0,0 | 0,0 |
| | 46 / Anfang | 1,0 | 1,2 | 61,8 | 0,0 | 73,5 | -1,5 |
| | 46 / Ende | -1,3 | 0,8 | 39,7 | -0,1 | -54,4 | 1,1 |
| | 131 / Anfang | 187,0 | 2,6 | -4,6 | -0,3 | -19,1 | -23,2 |
| | 137 / Ende | 2,1 | 0,1 | 42,6 | 0,0 | -23,2 | 0,1 |
| CO11(9) | 135 / Anfang | -0,7 | 0,1 | 26,7 | 0,0 | 0,0 | 0,0 |
| | 46 / Anfang | 0,7 | 0,2 | 38,4 | 0,0 | 43,8 | -0,3 |
| | 46 / Ende | 0,5 | 0,2 | 27,0 | 0,0 | -38,3 | 0,2 |
| | 131 / Anfang | 133,5 | 6,3 | -0,6 | 0,0 | -5,5 | -24,2 |
| | 137 / Ende | -1,3 | 0,1 | 41,4 | 0,0 | -24,3 | 0,1 |
| CO11(12) | 135 / Anfang | -1,7 | 0,2 | 42,7 | 0,0 | 0,0 | 0,0 |
| | 46 / Anfang | 1,1 | 0,9 | 61,4 | 0,0 | 71,9 | -1,1 |
| | 46 / Ende | -0,7 | 0,6 | 40,8 | -0,1 | -56,9 | 0,8 |
| | 131 / Anfang | 195,0 | 4,9 | -3,1 | -0,1 | -15,0 | -28,0 |
| | 137 / Ende | 1,5 | 0,2 | 50,0 | 0,0 | -28,1 | 0,1 |

### Fehlende Lasten

| Name | X [kN] | Y [kN] | Z [kN] | Mx [kNm] | My [kNm] | Mz [kNm] |
|---|---|---|---|---|---|---|
| CO11(31) | 1,8 | -3,2 | 0,0 | -1,5 | 0,0 | 0,0 |
| CO11(32) | -4,8 | -4,6 | 0,3 | -2,8 | 0,0 | 0,0 |
| CO11(33) | -0,1 | -5,0 | 0,0 | -2,9 | 0,0 | 0,0 |
| CO11(34) | -3,0 | -1,4 | 0,1 | -1,4 | 0,0 | 0,0 |
| CO11(35) | -0,6 | -7,2 | 0,1 | -2,8 | 0,0 | 0,0 |
| CO11(36) | -2,8 | -6,9 | 0,1 | -2,8 | 0,0 | 0,0 |
| CO9(37) | -6,1 | -0,4 | 0,0 | 0,0 | 0,0 | 0,0 |
| CO10(38) | -2,4 | -5,0 | 0,0 | -1,9 | 0,0 | 0,0 |
| CO11(39) | -1,3 | -6,4 | 0,1 | -3,2 | 0,0 | 0,0 |
| CO11(40) | -3,5 | -5,3 | 0,1 | -3,2 | 0,0 | 0,0 |
| CO11(41) | -0,4 | -6,1 | 0,1 | -1,4 | 0,0 | 0,0 |
| CO11(42) | 0,5 | -6,9 | 0,1 | -2,0 | 0,0 | 0,0 |
| CO11(43) | -4,3 | -7,6 | 0,2 | -2,8 | 0,0 | 0,0 |
| CO11(44) | -1,5 | -3,5 | 0,0 | -2,4 | 0,0 | 0,0 |
| CO11(25) | -1,1 | -2,7 | 0,1 | -1,4 | 0,0 | 0,0 |
| CO11(26) | 1,6 | -3,4 | 0,0 | -1,5 | 0,0 | 0,0 |
| CO11(27) | 0,1 | -5,8 | 0,0 | -2,9 | 0,0 | 0,0 |
| CO11(29) | 1,2 | -5,5 | 0,0 | -2,0 | 0,0 | 0,0 |
| CO11(30) | -5,1 | -5,7 | 0,2 | -3,1 | 0,0 | 0,0 |
| CO11(14) | -1,3 | -1,9 | 0,1 | -1,4 | 0,0 | 0,0 |
| CO11(17) | -4,9 | -5,8 | 0,1 | -3,1 | 0,0 | 0,0 |
| CO11(18) | -4,5 | -6,3 | 0,3 | -2,8 | 0,0 | 0,0 |
| CO11(19) | -3,1 | -5,9 | 0,2 | -3,1 | 0,0 | 0,0 |
| CO11(20) | -4,5 | -4,1 | 0,2 | -2,8 | 0,0 | 0,0 |
| CO11(1) | -4,9 | -6,9 | 0,2 | -3,1 | 0,0 | 0,0 |
| CO11(2) | -1,3 | -5,4 | 0,0 | -3,2 | 0,0 | 0,0 |
| CO11(3) | -1,5 | -5,6 | 0,0 | -3,2 | 0,0 | 0,0 |
| CO11(4) | 1,1 | -3,4 | 0,0 | -1,5 | 0,0 | 0,0 |
| CO11(5) | -4,9 | -3,9 | 0,2 | -2,7 | 0,0 | 0,0 |
| CO11(6) | -1,1 | -3,0 | 0,0 | -1,5 | 0,0 | 0,0 |
| CO11(8) | -5,2 | -4,9 | 0,2 | -3,1 | 0,0 | 0,0 |
| CO11(9) | 0,5 | -4,7 | 0,0 | -2,0 | 0,0 | 0,0 |
| CO11(12) | -3,0 | -6,3 | 0,1 | -3,1 | 0,0 | 0,0 |

## Nachweis

### Übersicht

| Name | Wert | Nachweisstatus |
|---|---|---|
| Berechnung | 100,0% | OK |
| Platten | 0,6 < 5,0% | OK |
| Schrauben | 90,4 < 100% | OK |
| Schweißnähte | 99,0 < 100% | OK |
| Beulen | Nicht berechnet | |

## Platten

| Name | Material | $t_p$ [mm] | Lasten | $\sigma_{Ed}$ [MPa] | $\varepsilon_{Pl}$ [%] | $\sigma_{c,Ed}$ [MPa] | Status |
|---|---|---|---|---|---|---|---|
| 135-bfl 1 | S 355 | 8,0 | CO11(43) | 64,4 | 0,0 | 0,0 | OK |
| 135-tfl 1 | S 355 | 8,0 | CO11(8) | 53,8 | 0,0 | 0,0 | OK |
| 135-w 1 | S 355 | 5,3 | CO11(36) | 355,6 | 0,3 | 32,7 | OK |
| 46-bfl 1 | Baustahl S 355 | 9,8 | CO11(35) | 278,4 | 0,0 | 0,0 | OK |
| 46-tfl 1 | Baustahl S 355 | 9,8 | CO11(36) | 356,3 | 0,6 | 164,6 | OK |
| 46-w 1 | Baustahl S 355 | 6,2 | CO11(36) | 352,5 | 0,0 | 0,0 | OK |
| 131-bfl 1 | Baustahl S 355 | 10,0 | CO11(36) | 343,4 | 0,0 | 0,0 | OK |
| 131-tfl 1 | Baustahl S 355 | 10,0 | CO11(36) | 307,7 | 0,0 | 0,0 | OK |
| 131-w 1 | Baustahl S 355 | 6,5 | CO11(36) | 215,3 | 0,0 | 0,0 | OK |
| 137-bfl 1 | S 355 | 8,0 | CO11(35) | 328,0 | 0,0 | 0,0 | OK |
| 137-tfl 1 | S 355 | 8,0 | CO11(43) | 355,1 | 0,1 | 0,0 | OK |
| 137-w 1 | S 355 | 5,3 | CO11(35) | 334,7 | 0,1 | 0,0 | OK |
| Stirnblech1 | S 355 | 15,0 | CO11(36) | 316,1 | 0,0 | 94,9 | OK |
| Verschobene Stirnplatte1a | S 355 | 15,0 | CO11(36) | 355,3 | 0,1 | 94,6 | OK |
| Verschobene Stirnplatte1b | S 355 | 15,0 | CO11(35) | 354,5 | 0,0 | 92,6 | OK |
| STEIFF | S 355 | 10,0 | CO11(36) | 352,7 | 0,0 | 0,0 | OK |
| Rippe1a | S 355 | 10,0 | CO11(36) | 356,2 | 0,6 | 0,0 | OK |
| Rippe1b | S 355 | 10,0 | CO11(36) | 234,5 | 0,0 | 0,0 | OK |
| Rippe1c | S 355 | 10,0 | CO11(35) | 355,4 | 0,2 | 0,0 | OK |
| Rippe1d | S 355 | 10,0 | CO11(36) | 238,8 | 0,0 | 0,0 | OK |
| Fahnenblech1 | S 355 | 10,0 | CO11(36) | 355,5 | 0,2 | 36,7 | OK |

**Bemessungsdaten**

| Material | $f_y$ [MPa] | $\varepsilon_{lim}$ [%] |
|---|---|---|
| S 355 | 355,0 | 5,0 |
| Baustahl S 355 | 355,0 | 5,0 |

**Erläuterung von Symbolen**

| | |
|---|---|
| $t_p$ | Plattendicke |
| $\sigma_{Ed}$ | Vergleichsspannung |
| $\varepsilon_{Pl}$ | Plastische Dehnung |
| $\sigma_{c,Ed}$ | Kontaktspannung |
| $f_y$ | Streckgrenze |
| $\varepsilon_{lim}$ | Grenzwert plastische Dehnung |

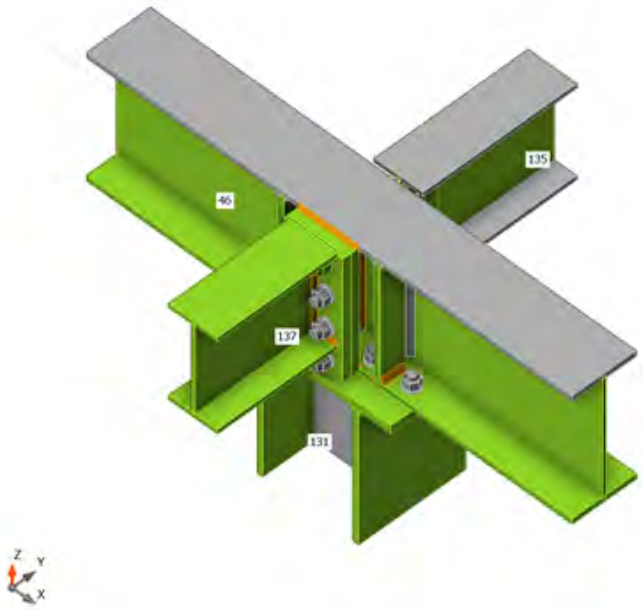


*Gesamt, CO11(36)*

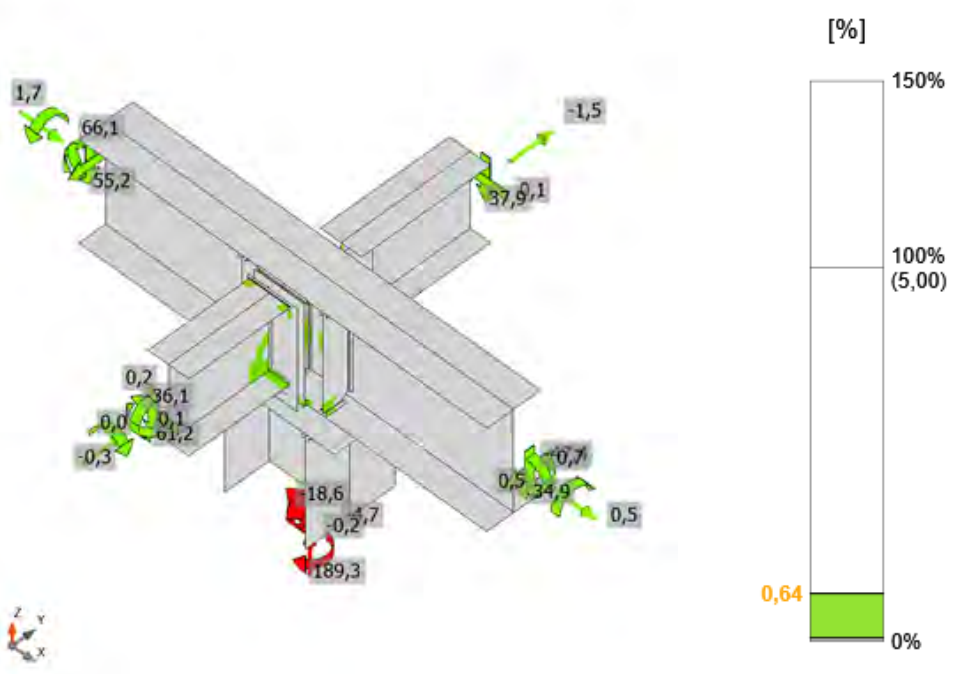


*Dehnung, CO11(36)*

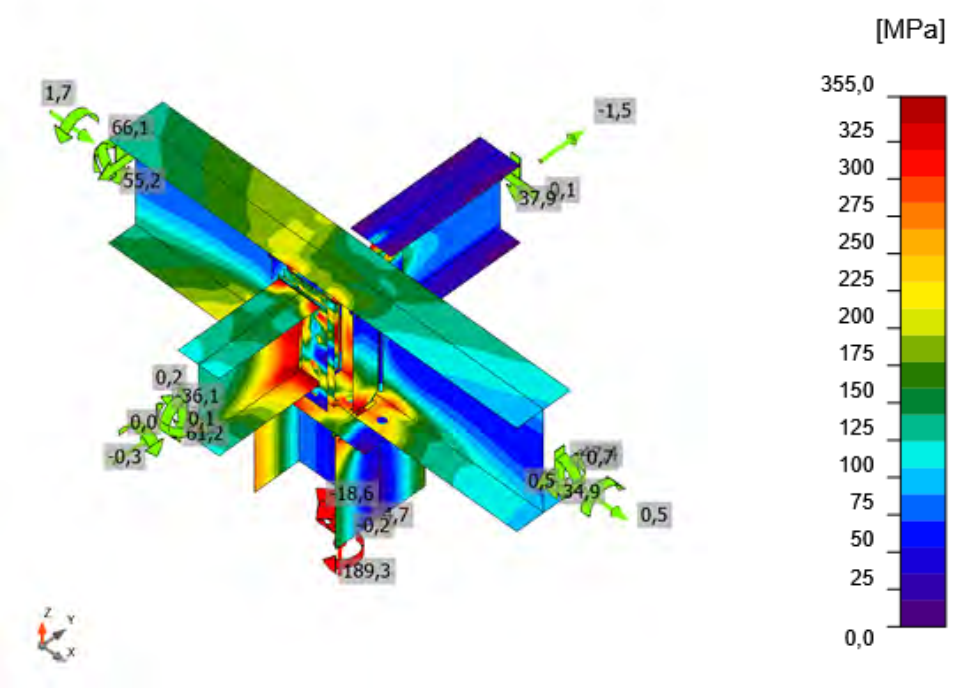


*Vergleichsspannung, CO11(36)*

## Schrauben

| Form | Position | Klasse | Lasten | $F_{t,Ed}$ [kN] | $F_{v,Ed}$ [kN] | $F_{b,Rd}$ [kN] | $Ut_t$ [%] | $Ut_s$ [%] | $Ut_{ts}$ [%] | Konstruktionsregeln | Status |
|---|---|---|---|---|---|---|---|---|---|---|---|
| 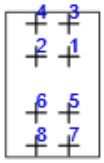 | B1 | M16 8.8 - 1 | CO11(36) | 73,7 | 0,5 | 153,7 | 81,5 | 0,9 | 59,1 | OK | OK |
| | B2 | M16 8.8 - 1 | CO9(37) | 43,1 | 0,2 | 70,5 | 47,7 | 0,4 | 34,5 | OK | OK |
| | B3 | M16 8.8 - 1 | CO11(36) | 72,3 | 5,7 | 95,6 | 80,0 | 9,4 | 66,5 | OK | OK |
| | B4 | M16 8.8 - 1 | CO9(37) | 30,0 | 1,7 | 67,1 | 33,2 | 2,8 | 26,5 | OK | OK |
| | B5 | M16 8.8 - 1 | CO11(42) | 62,7 | 1,2 | 153,7 | 69,3 | 1,9 | 51,4 | OK | OK |
| | B6 | M16 8.8 - 1 | CO11(42) | 6,8 | 2,3 | 69,8 | 7,5 | 3,8 | 9,2 | OK | OK |
| | B7 | M16 8.8 - 1 | CO11(42) | 47,4 | 4,4 | 134,5 | 52,4 | 7,4 | 44,8 | OK | OK |
| | B8 | M16 8.8 - 1 | CO11(1) | 1,9 | 8,1 | 153,7 | 2,1 | 13,4 | 14,9 | OK | OK |
| 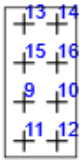 | B9 | M16 8.8 - 2 | CO11(36) | 0,0 | 7,7 | 183,6 | 0,0 | 12,8 | 12,8 | OK | OK |
| | B10 | M16 8.8 - 2 | CO11(35) | 0,0 | 7,5 | 183,6 | 0,0 | 12,4 | 12,4 | OK | OK |
| | B11 | M16 8.8 - 2 | CO11(35) | 0,0 | 14,4 | 99,1 | 0,0 | 23,9 | 23,9 | OK | OK |
| | B12 | M16 8.8 - 2 | CO11(35) | 0,0 | 14,3 | 99,1 | 0,0 | 23,7 | 23,7 | OK | OK |
| | B13 | M16 8.8 - 2 | CO11(35) | 81,7 | 2,9 | 99,1 | 90,4 | 4,7 | 69,3 | OK | OK |
| | B14 | M16 8.8 - 2 | CO11(35) | 81,3 | 2,8 | 99,1 | 90,0 | 4,7 | 68,9 | OK | OK |
| | B15 | M16 8.8 - 2 | CO11(35) | 53,2 | 6,3 | 183,6 | 58,9 | 10,5 | 52,5 | OK | OK |
| | B16 | M16 8.8 - 2 | CO11(35) | 52,5 | 6,2 | 183,6 | 58,1 | 10,2 | 51,7 | OK | OK |
| 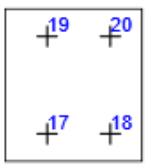 | B17 | M16 8.8 - 3 | CO11(36) | 4,5 | 33,7 | 82,0 | 5,0 | 55,9 | 59,4 | OK | OK |
| | B18 | M16 8.8 - 3 | CO11(36) | 6,0 | 43,0 | 73,7 | 6,6 | 71,4 | 76,1 | OK | OK |
| | B19 | M16 8.8 - 3 | CO11(36) | 10,3 | 34,4 | 40,1 | 11,4 | 85,7 | 65,2 | OK | OK |
| | B20 | M16 8.8 - 3 | CO11(36) | 5,5 | 43,5 | 64,4 | 6,1 | 72,1 | 76,4 | OK | OK |

**Bemessungsdaten**

| Klasse | $F_{t,Rd}$ [kN] | $B_{p,Rd}$ [kN] | $F_{v,Rd}$ [kN] |
|---|---|---|---|
| M16 8.8 - 1 | 90,4 | 183,7 | 60,3 |
| M16 8.8 - 2 | 90,4 | 281,2 | 60,3 |
| M16 8.8 - 3 | 90,4 | 99,4 | 60,3 |

**Erläuterung von Symbolen**

| | |
|---|---|
| $F_{t,Ed}$ | Zugkraft |
| $F_{v,Ed}$ | Resultierende der Schraubenscherkräfte Vy und Vz in Scherebenen |
| $F_{b,Rd}$ | Lochleibungstragfähigkeit der Platte nach EN 1993-1-8 Tab. 3.4 |
| $Ut_t$ | Ausnutzung unter Zug |
| $Ut_s$ | Ausnutzung unter Schub |
| $Ut_{ts}$ | Interaktion von Zug und Schub EN_1993-1-8 Tabelle 3.4 |
| $F_{t,Rd}$ | Zugtragfähigkeit der Schraube nach EN 1993-1-8 Tabelle 3.4 |
| $B_{p,Rd}$ | Durchstanztragfähigkeit nach EN 1993-1-8 Tabelle 3.4 |
| $F_{v,Rd}$ | Schertragfähigkeit der Schraube nach EN 1993-1-8 Tabelle 3.4 |

## Schweißnähte

| Position | Kante | $T_w$ [mm] | L [mm] | Lasten | $\sigma_{w,Ed}$ [MPa] | $\varepsilon_{Pl}$ [%] | $\sigma_{\perp}$ [MPa] | $\tau_{\perp}$ [MPa] | $\tau_{\parallel}$ [MPa] | Ut [%] | $Ut_c$ [%] | Konstruktionsregeln | Status |
|---|---|---|---|---|---|---|---|---|---|---|---|---|---|
| Stirnblech1 | 131-bfl 1 | ◢ 6,0 ◣ | 199 | CO11(36) | 426,9 | 0,0 | -171,7 | -179,8 | 136,3 | 98,0 | 54,5 | OK | OK |
| | | ◢ 6,0 ◣ | 199 | CO11(36) | 426,9 | 0,0 | -180,0 | 192,1 | 114,2 | 98,0 | 55,3 | OK | OK |
| Stirnblech1 | 131-tfl 1 | ◢ 6,0 ◣ | 199 | CO11(35) | 303,0 | 0,0 | -98,5 | -119,1 | -114,9 | 69,6 | 39,6 | OK | OK |
| | | ◢ 6,0 ◣ | 199 | CO11(35) | 333,5 | 0,0 | -159,8 | 141,9 | -91,7 | 76,6 | 43,1 | OK | OK |
| Stirnblech1 | 131-w 1 | ◢ 6,0 ◣ | 179 | CO11(36) | 149,6 | 0,0 | -53,7 | -77,0 | 24,1 | 34,4 | 28,0 | OK | OK |
| | | ◢ 6,0 ◣ | 179 | CO11(36) | 182,5 | 0,0 | 1,9 | -5,7 | 105,2 | 41,9 | 25,8 | OK | OK |
| Verschobene Stirnplatte1a | 46-tfl 1 | ◢ 4,0 ◣ | 111 | CO11(36) | 408,7 | 1,4 | -346,6 | -110,9 | -57,7 | 98,2 | 84,0 | OK | OK |
| | | ◢ 4,0 ◣ | 111 | CO11(36) | 430,4 | 2,1 | -237,0 | -127,1 | 163,9 | 98,8 | 90,0 | OK | OK |
| Verschobene Stirnplatte1a | 46-bfl 1 | ◢ 4,0 ◣ | 111 | CO11(35) | 427,0 | 0,1 | 258,9 | 177,4 | -83,4 | 98,0 | 71,9 | OK | OK |
| | | ◢ 4,0 ◣ | 111 | CO11(35) | 350,2 | 0,0 | 34,3 | 124,8 | -157,9 | 80,4 | 53,5 | OK | OK |
| Verschobene Stirnplatte1b | 137-bfl 1 | ◢ 4,0 ◣ | 91 | CO11(35) | 303,1 | 0,0 | 168,4 | 94,9 | -110,4 | 69,6 | 55,8 | OK | OK |
| | | ◢ 4,0 ◣ | 91 | CO11(35) | 219,1 | 0,0 | 133,5 | 82,6 | 56,9 | 50,3 | 40,8 | OK | OK |
| Verschobene Stirnplatte1b | 137-tfl 1 | ◢ 4,0 ◣ | 90 | CO11(35) | 431,3 | 2,5 | -233,2 | -209,4 | -4,9 | 99,0 | 96,4 | OK | OK |
| | | ◢ 4,0 ◣ | 91 | CO11(35) | 428,8 | 1,1 | -125,6 | 235,0 | -28,8 | 98,5 | 93,9 | OK | OK |
| Verschobene Stirnplatte1b | 137-w 1 | ◢ 4,0 ◣ | 170 | CO11(35) | 428,5 | 0,9 | -194,2 | -195,3 | 102,4 | 98,4 | 70,5 | OK | OK |
| | | ◢ 4,0 ◣ | 170 | CO11(35) | 428,4 | 0,9 | -195,6 | 194,2 | -103,5 | 98,4 | 70,3 | OK | OK |
| 46-bfl 1 | STEIFF | ◢ 4,0 ◣ | 57 | CO11(35) | 140,3 | 0,0 | -75,6 | -60,2 | 32,0 | 32,2 | 22,8 | OK | OK |
| | | ◢ 4,0 ◣ | 57 | CO11(35) | 114,6 | 0,0 | 16,3 | -9,0 | -64,9 | 26,3 | 17,1 | OK | OK |
| 46-w 1 | STEIFF | ◢ 4,0 ◣ | 219 | CO11(36) | 427,9 | 0,6 | -227,8 | -184,3 | 98,9 | 98,3 | 70,5 | OK | OK |

| Position | Kante | $T_w$ [mm] | L [mm] | Lasten | $\sigma_{w,Ed}$ [MPa] | $\varepsilon_{Pl}$ [%] | $\sigma_{\perp}$ [MPa] | $\tau_{\perp}$ [MPa] | $\tau_{\parallel}$ [MPa] | Ut [%] | $Ut_c$ [%] | Konstruktionsregeln | Status |
|---|---|---|---|---|---|---|---|---|---|---|---|---|---|
| | | ◢ 4,0 ◣ | 219 | CO11(36) | 427,2 | 0,2 | -93,6 | 185,5 | -153,3 | 98,1 | 61,3 | OK | OK |
| 46-tfl 1 | STEIFF | ◢ 4,0 ◣ | 57 | CO11(35) | 241,2 | 0,0 | -10,0 | -19,7 | 137,7 | 55,4 | 30,4 | OK | OK |
| | | ◢ 4,0 ◣ | 57 | CO11(36) | 258,5 | 0,0 | -59,5 | 43,8 | -138,4 | 59,3 | 34,4 | OK | OK |
| Verschobene Stirnplatte1a | STEIFF | ◢ 4,0 ◣ | 219 | CO11(35) | 428,6 | 1,0 | -190,1 | -198,7 | 98,4 | 98,4 | 76,9 | OK | OK |
| | | ◢ 4,0 ◣ | 219 | CO11(35) | 428,9 | 1,2 | -205,6 | 197,8 | -89,9 | 98,5 | 77,2 | OK | OK |
| 46-bfl 1 | Rippe1a | ◢ 6,0 ◣ | 42 | CO11(36) | 119,5 | 0,0 | -17,6 | -13,3 | -66,9 | 27,4 | 17,6 | OK | OK |
| | | ◢ 6,0 ◣ | 42 | CO11(1) | 112,8 | 0,0 | -18,7 | 22,1 | 60,3 | 25,9 | 16,6 | OK | OK |
| 46-w 1 | Rippe1a | ◢ 6,0 ◣ | 190 | CO11(35) | 214,4 | 0,0 | -48,7 | -41,9 | 113,0 | 49,2 | 37,5 | OK | OK |
| | | ◢ 6,0 ◣ | 190 | CO11(35) | 186,1 | 0,0 | -20,7 | 27,3 | -103,2 | 42,7 | 34,5 | OK | OK |
| 46-tfl 1 | Rippe1a | ◢ 6,0 ◣ | 42 | CO11(36) | 429,5 | 1,5 | -180,1 | -192,0 | -117,5 | 98,6 | 93,5 | OK | OK |
| | | ◢ 6,0 ◣ | 42 | CO11(36) | 430,3 | 2,0 | -199,3 | 189,9 | 111,5 | 98,8 | 94,0 | OK | OK |
| 46-bfl 1 | Rippe1b | ◢ 6,0 ◣ | 42 | CO11(42) | 76,3 | 0,0 | -3,3 | -3,4 | 43,9 | 17,5 | 13,2 | OK | OK |
| | | ◢ 6,0 ◣ | 42 | CO11(42) | 76,7 | 0,0 | -5,1 | 5,0 | -43,9 | 17,6 | 13,3 | OK | OK |
| 46-w 1 | Rippe1b | ◢ 6,0 ◣ | 190 | CO11(36) | 90,7 | 0,0 | -23,9 | -28,1 | -42,0 | 20,8 | 16,7 | OK | OK |
| | | ◢ 6,0 ◣ | 190 | CO11(36) | 93,9 | 0,0 | -38,5 | 34,4 | 35,6 | 21,6 | 15,7 | OK | OK |
| 46-tfl 1 | Rippe1b | ◢ 6,0 ◣ | 42 | CO11(42) | 208,6 | 0,0 | 95,8 | 104,2 | 24,3 | 47,9 | 40,9 | OK | OK |
| | | ◢ 6,0 ◣ | 42 | CO11(35) | 236,6 | 0,0 | 115,1 | -115,3 | 30,9 | 54,3 | 45,8 | OK | OK |
| 46-bfl 1 | Rippe1c | ◢ 6,0 ◣ | 42 | CO11(35) | 89,8 | 0,0 | -20,2 | -18,7 | -46,9 | 20,6 | 12,6 | OK | OK |
| | | ◢ 6,0 ◣ | 42 | CO11(35) | 85,4 | 0,0 | -14,2 | 15,7 | 46,0 | 19,6 | 12,4 | OK | OK |
| 46-w 1 | Rippe1c | ◢ 6,0 ◣ | 190 | CO11(35) | 144,4 | 0,0 | 3,2 | -1,1 | 83,3 | 33,1 | 26,9 | OK | OK |

| Position | Kante | $T_w$ [mm] | L [mm] | Lasten | $\sigma_{w,Ed}$ [MPa] | $\varepsilon_{Pl}$ [%] | $\sigma_{\perp}$ [MPa] | $\tau_{\perp}$ [MPa] | $\tau_{\parallel}$ [MPa] | Ut [%] | $Ut_c$ [%] | Konstruktionsregeln | Status |
|---|---|---|---|---|---|---|---|---|---|---|---|---|---|
| | | ◢ 6,0 ◣ | 190 | CO11(35) | 198,9 | 0,0 | -25,2 | 20,8 | -112,0 | 45,7 | 32,3 | OK | OK |
| 46-tfl 1 | Rippe1c | ◢ 6,0 ◣ | 42 | CO11(35) | 428,1 | 0,7 | -198,0 | -175,0 | -131,9 | 98,3 | 88,0 | OK | OK |
| | | ◢ 6,0 ◣ | 42 | CO11(35) | 427,5 | 0,4 | -151,8 | 188,2 | 133,5 | 98,2 | 81,0 | OK | OK |
| 46-bfl 1 | Rippe1d | ◢ 6,0 ◣ | 42 | CO11(42) | 73,9 | 0,0 | 4,7 | 2,9 | 42,5 | 17,0 | 12,8 | OK | OK |
| | | ◢ 6,0 ◣ | 42 | CO11(36) | 85,8 | 0,0 | -8,1 | 4,0 | -49,1 | 19,7 | 14,9 | OK | OK |
| 46-w 1 | Rippe1d | ◢ 6,0 ◣ | 189 | CO11(36) | 119,6 | 0,0 | -14,3 | -14,3 | -67,1 | 27,5 | 15,7 | OK | OK |
| | | ◢ 6,0 ◣ | 189 | CO11(35) | 94,1 | 0,0 | 9,6 | -4,6 | 53,9 | 21,6 | 12,8 | OK | OK |
| 46-tfl 1 | Rippe1d | ◢ 6,0 ◣ | 42 | CO11(36) | 291,2 | 0,0 | 140,3 | 138,3 | 50,9 | 66,9 | 55,6 | OK | OK |
| | | ◢ 6,0 ◣ | 42 | CO11(36) | 317,7 | 0,0 | 153,2 | -155,3 | -41,4 | 72,9 | 58,6 | OK | OK |
| 46-w 1 | Fahnenblech1 | ◢ 6,0 ◣ | 143 | CO11(36) | 427,2 | 0,2 | -205,2 | -209,1 | 55,2 | 98,1 | 71,8 | OK | OK |
| | | ◢ 6,0 ◣ | 143 | CO11(36) | 427,3 | 0,3 | -208,2 | 204,9 | -66,3 | 98,1 | 78,9 | OK | OK |

**Bemessungsdaten**

| Material | $f_u$ [MPa] | $\beta_w$ [-] | $\sigma_{w,Rd}$ [MPa] | 0.9 σ [MPa] |
|---|---|---|---|---|
| S 355 | 490,0 | 0,90 | 435,6 | 352,8 |

**Erläuterung von Symbolen**

| | |
|---|---|
| $T_w$ | Nahtdicke a |
| L | Länge |
| $\sigma_{w,Ed}$ | Vergleichsspannung |
| $\varepsilon_{Pl}$ | Dehnung |
| $\sigma_{\perp}$ | Senkrechte Spannung |
| $\tau_{\perp}$ | Scherspannung senkrecht zur Schweißnahtachse |
| $\tau_{\parallel}$ | Scherspannung parallel zur Schweißnahtachse |
| Ut | Ausnutzung |
| $Ut_c$ | Schätzung der Schweißnahtkapazität |
| ◢ | Kehlnaht |
| $f_u$ | Grenzfestigkeit der Schweißnaht |
| $\beta_w$ | Korrelationsfaktor nach EN 1993-1-8 Tab. 4.1 |
| $\sigma_{w,Rd}$ | Tragfähigkeit der Schweißnaht |
| 0.9 σ | Senkrechter Spannungswiderstand - 0.9*fu / γM2 |

## Beulen

**Die Beulanalyse wurde nicht berechnet.**

## Normeinstellungen

| Position | Wert | Einheit | Bezug |
|---|---|---|---|
| Sicherheitsfaktor $\gamma_{M0}$ | 1,00 | - | EN 1993-1-1 – 6.1 |
| Sicherheitsfaktor $\gamma_{M1}$ | 1,00 | - | EN 1993-1-1 – 6.1 |
| Sicherheitsfaktor $\gamma_{M2}$ | 1,25 | - | EN 1993-1-1 – 6.1 |
| Sicherheitsfaktor $\gamma_{M3}$ | 1,25 | - | EN 1993-1-8 – Table 2.1 |
| Sicherheitsfaktor $\gamma_{C}$ | 1,50 | - | EN 1992-1-1 – 2.4.2.4 |
| Sicherheitsfaktor $\gamma_{Inst}$ | 1,20 | - | EN 1992-4 – Table 4.1 |
| Verbindungskoeffizient βj | 0,67 | - | EN 1993-1-8 – 6.2.5(7) |
| Wirksame Fläche - Einfluss der Netzgröße | 0,10 | - | |
| Reibungsbeiwert - Beton | 0,25 | - | EN 1993-1-8 |
| Reibungskoeffizient bei gleitfesten Verbindungen | 0,30 | - | EN 1993-1-8 – Table 3.7 |
| Plastische Dehnung - Grenzwert | 0,05 | - | EN 1993-1-5 |
| Konstruktionsregeln | Ja | | |
| Distance between bolts [d0] | 2,20 | - | EN 1993-1-8 – Table 3.3 |
| Distance between bolts and edge [d0] | 1,20 | - | EN 1993-1-8 – Table 3.3 |
| Nachweis der Tragfähigkeit bei Betonausbruch | Beide | | |
| Berechnetes αb für Lochleibungsnachweis anwenden. | Ja | | EN 1993-1-8 – Table 3.4 |
| Gerissener Beton | Ja | | EN 1992-4 |
| Überprüfen der lokalen Verformung | Ja | | |
| Lokale Verformung - Grenzwert | 0,03 | - | CIDECT DG 1, 3 – 1.1 |
| Geometrische Nichtlinearität (GMNA) | Ja | | Analyse mit großen Verformungen für Verbindungen mit Hohlprofilen |
| Ausgesteiftes System | Nein | | EN 1993-1-8 – 5.2.2.5 |

| | |
|---|---|
| **Projekt:** | **IdeaStatiCa-Stadion_Fazanerija_JK-6_BR - 289** |
| **Projektnummer:** | **Detajl D4-O5** |
| **Autor:** | **mag. Igor Gorup dipl.ing.** |

## Projektdaten

| | |
|---|---|
| Projektname | IdeaStatiCa-Stadion_Fazanerija_JK-6_BR - 289 |
| Projektnummer | Detajl D4-O5 |
| Autor | mag. Igor Gorup dipl.ing. |
| Beschreibung | |
| Datum | 18.06.2025 |
| Norm | EN |

## Material

| | |
|---|---|
| Stahl | Baustahl S 355, Baustahl S 235, S 355 |

# Projektposition 289

## Bemessung

| | |
|---|---|
| Name | 289 |
| Beschreibung | |
| Berechnung | Spannung, Dehnung/ Lasten im Gleichgewicht |

### Bauteile

#### Geometrie

| Name | Querschnitt | β – Rotation [°] | Y - Rotation [°] | α - Rotation [°] | Abstand ex [mm] | Abstand ey [mm] | Abstand ez [mm] |
|---|---|---|---|---|---|---|---|
| 137 | 18 - IPE200 | -90,0 | 0,0 | -180,0 | 0 | 0 | 0 |
| 228 | 18 - IPE200 | 0,0 | 0,0 | -180,0 | 0 | 0 | 0 |

#### Auflager und Kräfte

| Name | Auflager | Kräfte in | X [mm] |
|---|---|---|---|
| 137 / anfang | N-Vy-Vz-Mx-My-Mz | Position | 0 |
| 228 / anfang | | Position | 0 |
| 228 / ende | | Position | 0 |

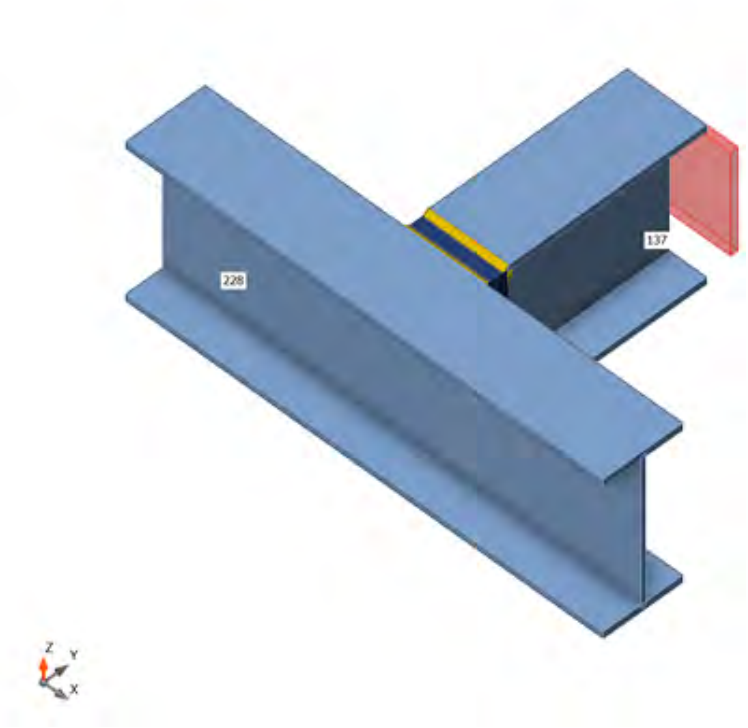


### Querschnitte

| Name | Material |
|---|---|
| 18 - IPE200 | Baustahl S 355 |

## Schrauben

| Name | Durchmesser [mm] | $f_y$ [MPa] | $f_u$ [MPa] | Bruttofläche [$mm^2$] |
|---|---|---|---|---|
| M12 8.8 | 12 | 640,0 | 800,0 | 113 |

## Lasteinwirkungen (Kräfte im Gleichgewicht)

| Name | Bauteil | N [kN] | Vy [kN] | Vz [kN] | Mx [kNm] | My [kNm] | Mz [kNm] |
|---|---|---|---|---|---|---|---|
| CO11(15) | 137 / Anfang | -1,1 | 0,0 | -11,6 | 0,0 | 0,0 | 0,0 |
| | 228 / Anfang | 0,4 | 0,7 | 6,0 | 0,0 | 4,2 | -0,2 |
| | 228 / Ende | 1,2 | 0,7 | 5,6 | 0,0 | -4,2 | 0,2 |
| CO9(16) | 137 / Anfang | -0,4 | 0,0 | -0,7 | 0,0 | 0,0 | 0,0 |
| | 228 / Anfang | -1,1 | 0,0 | 0,1 | 0,0 | 0,3 | 0,0 |
| | 228 / Ende | -0,7 | 0,0 | 0,7 | 0,0 | -0,3 | 0,0 |
| CO11(17) | 137 / Anfang | -1,0 | 0,0 | -10,8 | 0,0 | 0,0 | 0,0 |
| | 228 / Anfang | 0,3 | 0,7 | 6,0 | 0,0 | 4,1 | -0,2 |
| | 228 / Ende | 1,2 | 0,7 | 4,8 | 0,0 | -4,1 | 0,2 |
| CO11(18) | 137 / Anfang | 1,7 | -0,1 | -44,2 | 0,0 | 0,0 | 0,0 |
| | 228 / Anfang | -1,0 | -1,3 | 11,0 | 0,0 | 11,2 | 0,2 |
| | 228 / Ende | -0,1 | -1,0 | 33,3 | 0,0 | -11,2 | -0,3 |
| CO11(19) | 137 / Anfang | 0,4 | -0,1 | -44,0 | 0,0 | 0,0 | 0,0 |
| | 228 / Anfang | -0,5 | -0,7 | 11,8 | 0,0 | 11,7 | 0,1 |
| | 228 / Ende | 0,1 | -0,3 | 32,2 | 0,0 | -11,7 | -0,1 |
| CO11(20) | 137 / Anfang | 0,3 | 0,0 | -48,1 | 0,0 | 0,0 | 0,0 |
| | 228 / Anfang | -0,9 | -0,7 | 10,9 | 0,0 | 11,1 | 0,0 |
| | 228 / Ende | 0,0 | -0,1 | 37,2 | 0,0 | -11,1 | 0,0 |
| CO11(21) | 137 / Anfang | -1,7 | -0,1 | -27,0 | 0,0 | 0,0 | 0,0 |
| | 228 / Anfang | -0,5 | 0,6 | 11,3 | 0,0 | 8,9 | -0,3 |
| | 228 / Ende | 0,8 | 0,7 | 15,8 | 0,0 | -8,9 | 0,3 |
| CO11(22) | 137 / Anfang | 2,8 | -0,1 | -26,9 | 0,0 | 0,0 | 0,0 |
| | 228 / Anfang | -0,4 | -1,4 | 6,6 | 0,0 | 7,2 | 0,4 |
| | 228 / Ende | -0,2 | -1,4 | 20,3 | 0,0 | -7,2 | -0,4 |
| CO11(23) | 137 / Anfang | -2,0 | -0,1 | -27,8 | 0,0 | 0,0 | 0,0 |
| | 228 / Anfang | -0,3 | 0,8 | 10,3 | 0,0 | 8,0 | -0,4 |
| | 228 / Ende | 1,2 | 1,0 | 17,6 | 0,0 | -8,0 | 0,4 |
| CO11(24) | 137 / Anfang | 0,4 | 0,0 | -48,6 | 0,0 | 0,0 | 0,0 |
| | 228 / Anfang | -0,5 | -0,7 | 11,0 | 0,0 | 11,4 | 0,0 |
| | 228 / Ende | 0,2 | -0,1 | 37,7 | 0,0 | -11,4 | 0,0 |
| CO11(3) | 137 / Anfang | 2,0 | -0,1 | -38,8 | 0,0 | 0,0 | 0,0 |
| | 228 / Anfang | -0,6 | -1,3 | 10,9 | 0,0 | 11,0 | 0,3 |
| | 228 / Ende | -0,1 | -1,2 | 27,8 | 0,0 | -11,0 | -0,3 |
| CO11(4) | 137 / Anfang | -1,2 | 0,0 | -10,4 | 0,0 | 0,0 | 0,0 |
| | 228 / Anfang | 0,0 | 0,7 | 5,9 | 0,0 | 3,8 | -0,2 |
| | 228 / Ende | 1,1 | 0,7 | 4,4 | 0,0 | -3,8 | 0,2 |
| CO10(8) | 137 / Anfang | -0,5 | 0,0 | -24,7 | 0,0 | 0,0 | 0,0 |
| | 228 / Anfang | -0,3 | 0,0 | 7,6 | 0,0 | 7,0 | 0,0 |
| | 228 / Ende | 0,2 | 0,0 | 17,2 | 0,0 | -7,0 | 0,0 |
| CO11(10) | 137 / Anfang | 0,4 | -0,1 | -37,7 | 0,0 | 0,0 | 0,0 |
| | 228 / Anfang | -0,9 | -0,7 | 11,7 | 0,0 | 10,9 | 0,1 |
| | 228 / Ende | 0,0 | -0,5 | 26,0 | 0,0 | -10,9 | -0,1 |
| CO11(11) | 137 / Anfang | -0,7 | 0,0 | -34,8 | 0,0 | 0,0 | 0,0 |
| | 228 / Anfang | -0,2 | 0,1 | 6,5 | 0,0 | 6,9 | -0,1 |
| | 228 / Ende | 0,3 | 0,5 | 28,3 | 0,0 | -6,9 | 0,1 |

| Name | Bauteil | N [kN] | Vy [kN] | Vz [kN] | Mx [kNm] | My [kNm] | Mz [kNm] |
|---|---|---|---|---|---|---|---|
| CO11(12) | 137 / Anfang | 0,8 | 0,0 | -45,6 | 0,0 | 0,0 | 0,0 |
| | 228 / Anfang | -0,4 | -0,7 | 8,9 | 0,0 | 9,7 | 0,1 |
| | 228 / Ende | 0,2 | -0,2 | 36,8 | 0,0 | -9,7 | -0,1 |
| CO11(13) | 137 / Anfang | -1,7 | 0,0 | -45,2 | 0,0 | 0,0 | 0,0 |
| | 228 / Anfang | -0,8 | 0,3 | 10,7 | 0,0 | 10,3 | -0,2 |
| | 228 / Ende | 0,3 | 0,8 | 34,5 | 0,0 | -10,3 | 0,2 |
| CO11(14) | 137 / Anfang | 2,2 | -0,1 | -30,4 | 0,0 | 0,0 | 0,0 |
| | 228 / Anfang | -0,8 | -1,4 | 8,7 | 0,0 | 8,7 | 0,3 |
| | 228 / Ende | -0,2 | -1,4 | 21,7 | 0,0 | -8,7 | -0,4 |

### Fehlende Lasten

| Name | X [kN] | Y [kN] | Z [kN] | Mx [kNm] | My [kNm] | Mz [kNm] |
|---|---|---|---|---|---|---|
| CO11(15) | 1,5 | -0,3 | 0,0 | 0,0 | 0,0 | 0,0 |
| CO9(16) | -1,7 | 0,4 | 0,0 | 0,0 | 0,0 | 0,0 |
| CO11(17) | 1,5 | -0,4 | 0,0 | 0,0 | 0,0 | 0,0 |
| CO11(18) | -1,0 | 0,6 | 0,0 | 0,0 | 0,0 | 0,0 |
| CO11(19) | -0,3 | 0,6 | 0,0 | 0,0 | 0,0 | 0,0 |
| CO11(20) | -0,8 | 0,5 | 0,0 | 0,0 | 0,0 | 0,0 |
| CO11(21) | 0,4 | 0,4 | 0,0 | 0,0 | 0,0 | 0,0 |
| CO11(22) | -0,5 | 0,1 | 0,0 | 0,0 | 0,0 | 0,0 |
| CO11(23) | 1,0 | 0,1 | 0,0 | 0,0 | 0,0 | 0,0 |
| CO11(24) | -0,4 | 0,4 | 0,0 | 0,0 | 0,0 | 0,0 |
| CO11(3) | -0,5 | 0,6 | 0,0 | 0,0 | 0,0 | 0,0 |
| CO11(4) | 1,0 | -0,2 | 0,0 | 0,0 | 0,0 | 0,0 |
| CO10(8) | -0,1 | 0,5 | 0,0 | 0,0 | 0,0 | 0,0 |
| CO11(10) | -0,7 | 0,8 | 0,0 | 0,0 | 0,0 | 0,0 |
| CO11(11) | 0,1 | 0,1 | 0,0 | 0,0 | 0,0 | 0,0 |
| CO11(12) | -0,3 | 0,2 | 0,0 | 0,0 | 0,0 | 0,0 |
| CO11(13) | -0,5 | 0,6 | 0,0 | 0,0 | 0,0 | 0,0 |
| CO11(14) | -1,0 | 0,6 | 0,0 | 0,0 | 0,0 | 0,0 |

## Nachweis

### Übersicht

| Name | Wert | Nachweisstatus |
|---|---|---|
| Berechnung | 100,0% | OK |
| Platten | 0,0 < 5,0% | OK |
| Schrauben | 53,1 < 100% | OK |
| Schweißnähte | 24,8 < 100% | OK |
| Beulen | Nicht berechnet | |

## Platten

| Name | Material | $t_p$ [mm] | Lasten | $\sigma_{Ed}$ [MPa] | $\varepsilon_{Pl}$ [%] | $\sigma_{c,Ed}$ [MPa] | Status |
|---|---|---|---|---|---|---|---|
| 137-bfl 1 | Baustahl S 355 | 8,5 | CO11(20) | 89,6 | 0,0 | 0,0 | OK |
| 137-tfl 1 | Baustahl S 355 | 8,5 | CO11(20) | 90,9 | 0,0 | 0,0 | OK |
| 137-w 1 | Baustahl S 355 | 5,6 | CO11(24) | 101,0 | 0,0 | 0,0 | OK |
| 228-bfl 1 | Baustahl S 355 | 8,5 | CO11(18) | 73,4 | 0,0 | 0,0 | OK |
| 228-tfl 1 | Baustahl S 355 | 8,5 | CO11(24) | 76,7 | 0,0 | 0,0 | OK |
| 228-w 1 | Baustahl S 355 | 5,6 | CO11(24) | 83,6 | 0,0 | 0,0 | OK |
| Verschobene Stirnplatte1a | S 355 | 15,0 | CO11(24) | 113,9 | 0,0 | 22,5 | OK |
| Verschobene Stirnplatte1b | S 355 | 15,0 | CO11(24) | 85,5 | 0,0 | 22,5 | OK |
| STEIFF | S 355 | 10,0 | CO11(24) | 62,9 | 0,0 | 0,0 | OK |

### Bemessungsdaten

| Material | $f_y$ [MPa] | $\varepsilon_{lim}$ [%] |
|---|---|---|
| Baustahl S 355 | 355,0 | 5,0 |
| S 355 | 355,0 | 5,0 |

### Erläuterung von Symbolen

| | |
|---|---|
| $t_p$ | Plattendicke |
| $\sigma_{Ed}$ | Vergleichsspannung |
| $\varepsilon_{Pl}$ | Plastische Dehnung |
| $\sigma_{c,Ed}$ | Kontaktspannung |
| $f_y$ | Streckgrenze |
| $\varepsilon_{lim}$ | Grenzwert plastische Dehnung |

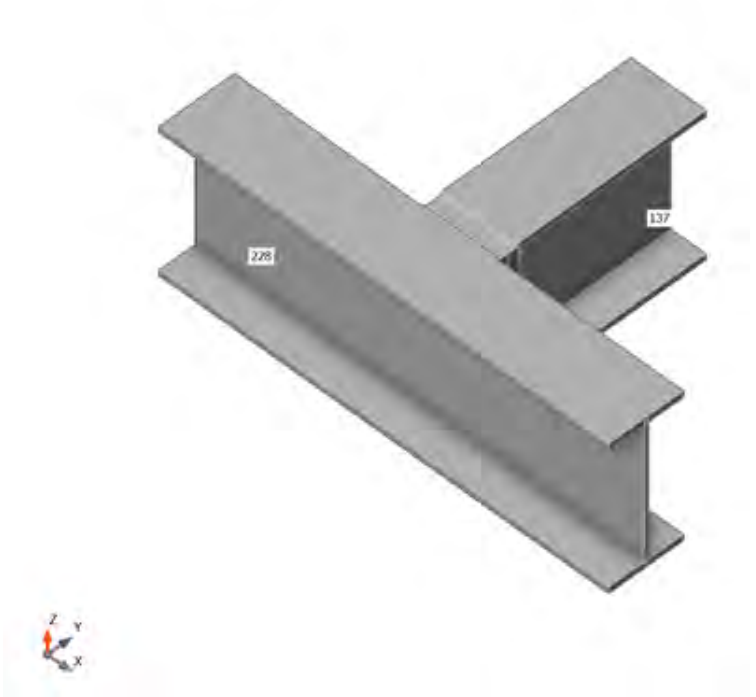


*Gesamt, CO11(20)*

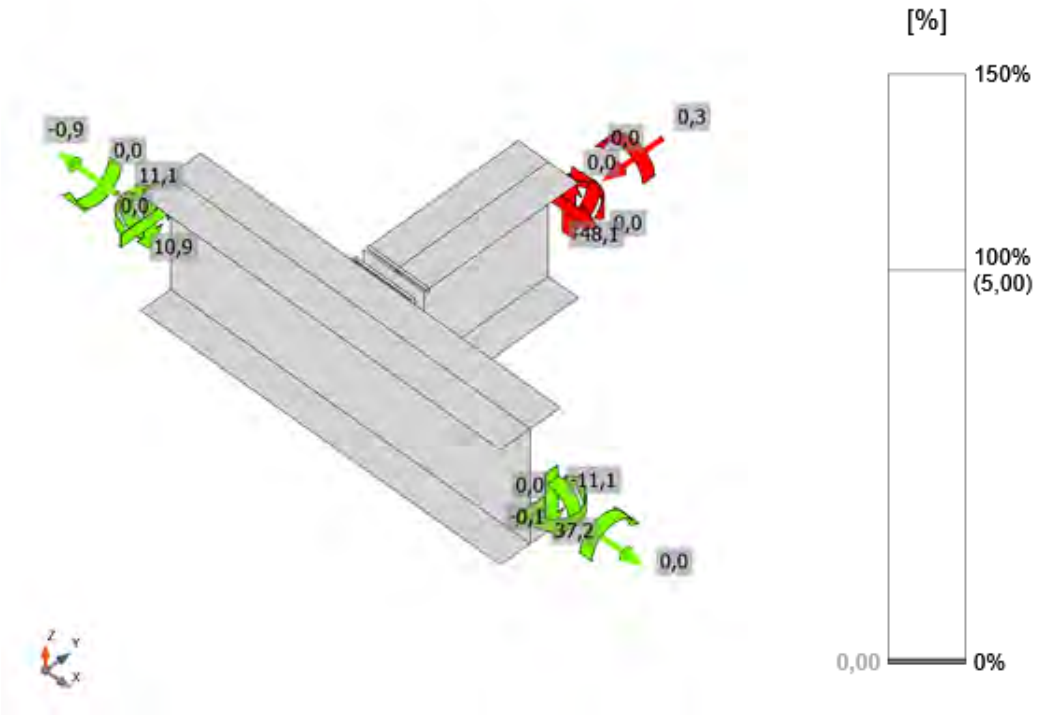


*Dehnung, CO11(20)*

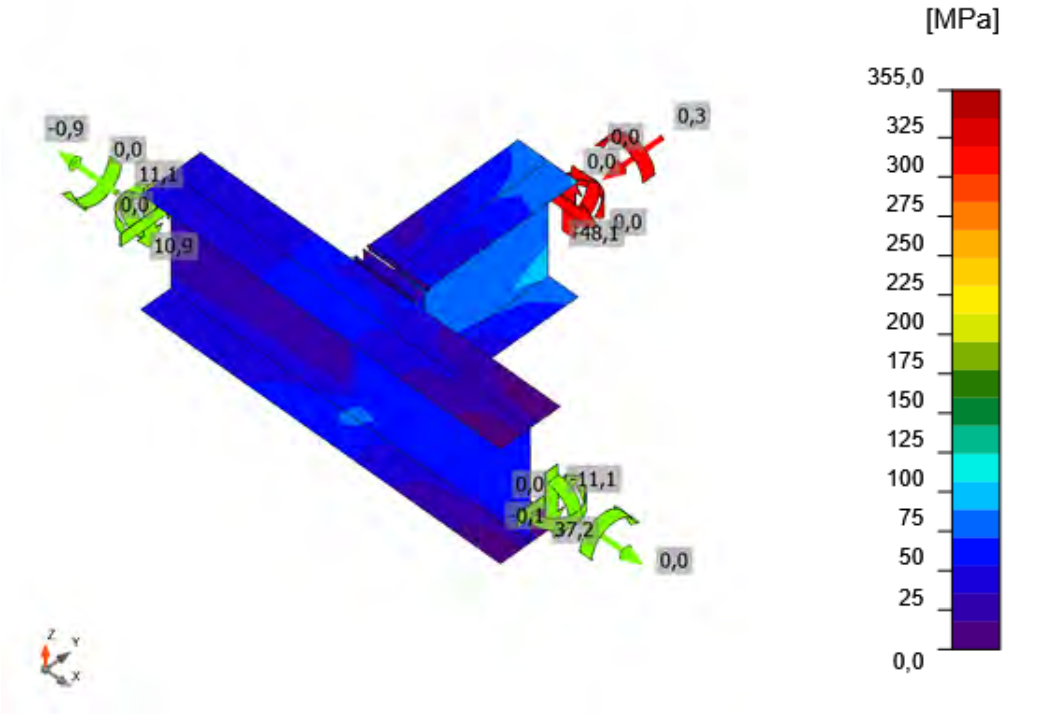


*Vergleichsspannung, CO11(20)*

## Schrauben

| Form | Position | Klasse | Lasten | $F_{t,Ed}$ [kN] | $F_{v,Ed}$ [kN] | $F_{b,Rd}$ [kN] | $Ut_t$ [%] | $Ut_s$ [%] | $Ut_{ts}$ [%] | Konstruktionsregeln | Status |
|---|---|---|---|---|---|---|---|---|---|---|---|
| 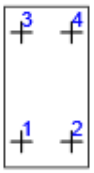 | B1 | M12 8.8 - 1 | CO11(24) | 0,5 | 12,2 | 139,1 | 1,0 | 37,8 | 38,5 | OK | OK |
| | B2 | M12 8.8 - 1 | CO11(24) | 0,5 | 12,1 | 139,1 | 1,0 | 37,5 | 38,2 | OK | OK |
| | B3 | M12 8.8 - 1 | CO11(24) | 10,5 | 12,2 | 139,1 | 21,6 | 37,6 | 53,1 | OK | OK |
| | B4 | M12 8.8 - 1 | CO11(24) | 9,7 | 12,1 | 139,1 | 20,1 | 37,3 | 51,6 | OK | OK |



### Bemessungsdaten

| Klasse | $F_{t,Rd}$ [kN] | $B_{p,Rd}$ [kN] | $F_{v,Rd}$ [kN] |
|---|---|---|---|
| M12 8.8 - 1 | 48,6 | 210,8 | 32,4 |

### Erläuterung von Symbolen

| | |
|---|---|
| $F_{t,Ed}$ | Zugkraft |
| $F_{v,Ed}$ | Resultierende der Schraubenscherkräfte Vy und Vz in Scherebenen |
| $F_{b,Rd}$ | Lochleibungstragfähigkeit der Platte nach EN 1993-1-8 Tab. 3.4 |
| $Ut_t$ | Ausnutzung unter Zug |
| $Ut_s$ | Ausnutzung unter Schub |
| $Ut_{ts}$ | Interaktion von Zug und Schub EN_1993-1-8 Tabelle 3.4 |
| $F_{t,Rd}$ | Zugtragfähigkeit der Schraube nach EN 1993-1-8 Tabelle 3.4 |
| $B_{p,Rd}$ | Durchstanztragfähigkeit nach EN 1993-1-8 Tabelle 3.4 |
| $F_{v,Rd}$ | Schertragfähigkeit der Schraube nach EN 1993-1-8 Tabelle 3.4 |

## Schweißnähte

| Position | Kante | $T_w$ [mm] | L [mm] | Lasten | $\sigma_{w,Ed}$ [MPa] | $\varepsilon_{Pl}$ [%] | $\sigma_{\perp}$ [MPa] | $\tau_{\perp}$ [MPa] | $\tau_{\parallel}$ [MPa] | Ut [%] | $Ut_c$ [%] | Konstruktionsregeln | Status |
|---|---|---|---|---|---|---|---|---|---|---|---|---|---|
| Verschobene Stirnplatte1a | 228-tfl 1 | ◢ 4,0 | 100 | CO11(18) | 107,9 | 0,0 | -33,0 | 41,1 | 42,8 | 24,8 | 19,1 | OK | OK |
| Verschobene Stirnplatte1a | 228-bfl 1 | ◢ 4,0 | 100 | CO11(13) | 90,7 | 0,0 | 34,1 | 34,6 | 34,0 | 20,8 | 14,8 | OK | OK |
| Verschobene Stirnplatte1b | 137-bfl 1 | ◢ 4,0 ◣ | 99 | CO11(24) | 52,0 | 0,0 | 35,2 | 19,1 | 11,1 | 11,9 | 10,3 | OK | OK |
| | | ◢ 4,0 ◣ | 99 | CO11(20) | 29,0 | 0,0 | 2,7 | 2,5 | 16,5 | 6,6 | 6,6 | OK | OK |
| Verschobene Stirnplatte1b | 137-tfl 1 | ◢ 4,0 ◣ | 99 | CO11(20) | 47,7 | 0,0 | -27,3 | 21,8 | -6,0 | 10,9 | 8,9 | OK | OK |
| | | ◢ 4,0 ◣ | 99 | CO11(24) | 49,5 | 0,0 | -22,3 | 25,1 | 4,9 | 11,4 | 9,0 | OK | OK |
| Verschobene Stirnplatte1b | 137-w 1 | ◢ 4,0 ◣ | 190 | CO11(24) | 63,4 | 0,0 | -7,5 | -8,0 | 35,5 | 14,6 | 12,5 | OK | OK |
| | | ◢ 4,0 ◣ | 190 | CO11(24) | 70,2 | 0,0 | 21,8 | -21,9 | -31,7 | 16,1 | 13,3 | OK | OK |
| 228-bfl 1 | STEIFF | ◢ 4,0 ◣ | 35 | CO11(18) | 26,4 | 0,0 | -2,0 | -5,0 | -14,4 | 6,1 | 6,1 | OK | OK |
| | | ◢ 4,0 ◣ | 35 | CO11(24) | 32,4 | 0,0 | -9,8 | 6,4 | 16,6 | 7,4 | 6,9 | OK | OK |
| 228-w 1 | STEIFF | ◢ 4,0 ◣ | 159 | CO11(24) | 89,8 | 0,0 | 3,4 | 3,0 | 51,7 | 20,6 | 15,6 | OK | OK |
| | | ◢ 4,0 ◣ | 159 | CO11(24) | 92,3 | 0,0 | 3,0 | -3,4 | -53,2 | 21,2 | 16,2 | OK | OK |
| 228-tfl 1 | STEIFF | ◢ 4,0 ◣ | 35 | CO11(24) | 76,0 | 0,0 | 1,9 | 5,0 | -43,6 | 17,4 | 10,2 | OK | OK |
| | | ◢ 4,0 ◣ | 35 | CO11(24) | 80,8 | 0,0 | 8,8 | -5,8 | 46,0 | 18,5 | 10,9 | OK | OK |
| Verschobene Stirnplatte1a | STEIFF | ◢ 4,0 ◣ | 181 | CO11(24) | 74,8 | 0,0 | 13,1 | 13,4 | 40,3 | 17,2 | 9,7 | OK | OK |
| | | ◢ 4,0 ◣ | 181 | CO11(24) | 80,2 | 0,0 | 14,7 | -14,4 | -43,2 | 18,4 | 10,0 | OK | OK |

**Bemessungsdaten**

| Material | $f_u$ [MPa] | $\beta_w$ [-] | $\sigma_{w,Rd}$ [MPa] | 0.9 σ [MPa] |
|---|---|---|---|---|
| S 355 | 490,0 | 0,90 | 435,6 | 352,8 |

**Erläuterung von Symbolen**

| | |
|---|---|
| $T_w$ | Nahtdicke a |
| L | Länge |
| $\sigma_{w,Ed}$ | Vergleichsspannung |
| $\varepsilon_{Pl}$ | Dehnung |
| $\sigma_{\perp}$ | Senkrechte Spannung |
| $\tau_{\perp}$ | Scherspannung senkrecht zur Schweißnahtachse |
| $\tau_{\parallel}$ | Scherspannung parallel zur Schweißnahtachse |
| Ut | Ausnutzung |
| $Ut_c$ | Schätzung der Schweißnahtkapazität |
| ◢ | Kehlnaht |
| $f_u$ | Grenzfestigkeit der Schweißnaht |
| $\beta_w$ | Korrelationsfaktor nach EN 1993-1-8 Tab. 4.1 |
| $\sigma_{w,Rd}$ | Tragfähigkeit der Schweißnaht |
| 0.9 σ | Senkrechter Spannungswiderstand - 0.9*fu / γM2 |

### Beulen

**Die Beulanalyse wurde nicht berechnet.**

## Normeinstellungen

| Position | Wert | Einheit | Bezug |
|---|---|---|---|
| Sicherheitsfaktor $\gamma_{M0}$ | 1,00 | - | EN 1993-1-1 – 6.1 |
| Sicherheitsfaktor $\gamma_{M1}$ | 1,00 | - | EN 1993-1-1 – 6.1 |
| Sicherheitsfaktor $\gamma_{M2}$ | 1,25 | - | EN 1993-1-1 – 6.1 |
| Sicherheitsfaktor $\gamma_{M3}$ | 1,25 | - | EN 1993-1-8 – Table 2.1 |
| Sicherheitsfaktor $\gamma_C$ | 1,50 | - | EN 1992-1-1 – 2.4.2.4 |
| Sicherheitsfaktor $\gamma_{Inst}$ | 1,20 | - | EN 1992-4 – Table 4.1 |
| Verbindungskoeffizient βj | 0,67 | - | EN 1993-1-8 – 6.2.5(7) |
| Wirksame Fläche - Einfluss der Netzgröße | 0,10 | - | |
| Reibungsbeiwert - Beton | 0,25 | - | EN 1993-1-8 |
| Reibungskoeffizient bei gleitfesten Verbindungen | 0,30 | - | EN 1993-1-8 – Table 3.7 |
| Plastische Dehnung - Grenzwert | 0,05 | - | EN 1993-1-5 |
| Konstruktionsregeln | Ja | | |
| Distance between bolts [d0] | 2,20 | - | EN 1993-1-8 – Table 3.3 |
| Distance between bolts and edge [d0] | 1,20 | - | EN 1993-1-8 – Table 3.3 |
| Nachweis der Tragfähigkeit bei Betonausbruch | Beide | | |
| Berechnetes αb für Lochleibungsnachweis anwenden. | Ja | | EN 1993-1-8 – Table 3.4 |
| Gerissener Beton | Ja | | EN 1992-4 |
| Überprüfen der lokalen Verformung | Ja | | |
| Lokale Verformung - Grenzwert | 0,03 | - | CIDECT DG 1, 3 – 1.1 |
| Geometrische Nichtlinearität (GMNA) | Ja | | Analyse mit großen Verformungen für Verbindungen mit Hohlprofilen |
| Ausgesteiftes System | Nein | | EN 1993-1-8 – 5.2.2.5 |

| | |
|---|---|
| **Projekt:** | **IdeaStatiCa-Stadion_Fazanerija_JK-6_BR - 292** |
| **Projektnummer:** | **Detajl D5-O5** |
| **Autor:** | **mag. Igor Gorup dipl. ing.** |

## Projektdaten

| | |
|---|---|
| Projektname | IdeaStatiCa-Stadion_Fazanerija_JK-6_BR - 292 |
| Projektnummer | Detajl D5-O5 |
| Autor | mag. Igor Gorup dipl. ing. |
| Beschreibung | |
| Datum | 18.06.2025 |
| Norm | EN |

## Material

| | |
|---|---|
| Stahl | Baustahl S 355, Baustahl S 235, S 355 |

# Projektposition 292

## Bemessung

| | |
|---|---|
| Name | 292 |
| Beschreibung | |
| Berechnung | Spannung, Dehnung/ Lasten im Gleichgewicht |

### Bauteile

#### Geometrie

| Name | Querschnitt | β – Rotation [°] | Y - Rotation [°] | α - Rotation [°] | Abstand ex [mm] | Abstand ey [mm] | Abstand ez [mm] |
|---|---|---|---|---|---|---|---|
| 228 | 18 - IPE200 | 0,0 | 0,0 | -180,0 | 0 | 0 | 0 |
| 190 | 795 - RHS80x80 | -90,0 | 90,0 | -90,0 | 0 | 10 | 0 |

#### Auflager und Kräfte

| Name | Auflager | Kräfte in | X [mm] |
|---|---|---|---|
| 228 / anfang | N-Vy-Vz-Mx-My-Mz | Position | 0 |
| 228 / ende | | Position | 0 |
| 190 / ende | | Position | 0 |

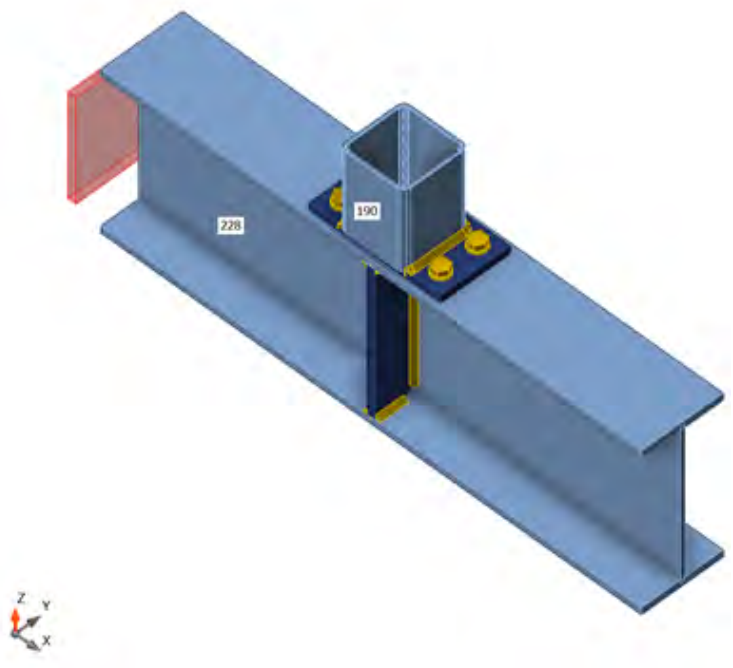


### Querschnitte

| Name | Material |
|---|---|
| 18 - IPE200 | Baustahl S 355 |
| 795 - RHS80x80 | Baustahl S 355 |

## Schrauben

| Name | Durchmesser [mm] | $f_y$ [MPa] | $f_u$ [MPa] | Bruttofläche [$mm^2$] |
|---|---|---|---|---|
| M12 8.8 | 12 | 640,0 | 800,0 | 113 |

## Lasteinwirkungen (Kräfte im Gleichgewicht)

| Name | Bauteil | N [kN] | Vy [kN] | Vz [kN] | Mx [kNm] | My [kNm] | Mz [kNm] |
|---|---|---|---|---|---|---|---|
| CO11(12) | 228 / Anfang | -0,2 | -0,2 | -36,2 | 0,0 | -9,4 | 0,1 |
| | 228 / Ende | 0,1 | -0,4 | 1,6 | 0,0 | 9,4 | -0,1 |
| | 190 / Ende | -34,6 | 0,0 | 0,0 | 0,0 | 0,0 | 0,0 |
| CO11(13) | 228 / Anfang | -1,1 | -0,3 | -4,9 | 0,0 | 2,8 | 0,0 |
| | 228 / Ende | 1,1 | 0,3 | 5,3 | 0,0 | -2,8 | 0,0 |
| | 190 / Ende | 0,5 | 0,0 | 0,0 | 0,0 | 0,0 | 0,0 |
| CO11(14) | 228 / Anfang | -1,2 | -0,5 | -11,2 | 0,0 | 1,5 | 0,0 |
| | 228 / Ende | 1,2 | 0,4 | 6,1 | 0,0 | -1,5 | 0,0 |
| | 190 / Ende | -5,2 | 0,0 | 0,0 | 0,0 | 0,0 | 0,0 |
| CO11(15) | 228 / Anfang | 0,1 | 0,4 | -25,5 | 0,0 | -4,3 | -0,1 |
| | 228 / Ende | -0,1 | -0,7 | 3,2 | 0,0 | 4,3 | 0,1 |
| | 190 / Ende | -22,3 | 0,0 | 0,0 | 0,0 | 0,0 | 0,0 |
| CO11(16) | 228 / Anfang | -0,2 | -0,4 | -21,9 | 0,0 | -1,6 | 0,0 |
| | 228 / Ende | 0,3 | 0,1 | 5,6 | 0,0 | 1,6 | 0,0 |
| | 190 / Ende | -16,2 | 0,0 | 0,0 | 0,0 | 0,0 | 0,0 |
| CO11(17) | 228 / Anfang | -1,2 | -0,4 | -11,0 | 0,0 | -1,2 | 0,1 |
| | 228 / Ende | 1,2 | 0,3 | 2,9 | 0,0 | 1,2 | -0,1 |
| | 190 / Ende | -8,0 | 0,0 | 0,0 | 0,0 | 0,0 | 0,0 |
| CO11(18) | 228 / Anfang | 0,3 | 0,5 | -19,5 | 0,0 | -3,5 | -0,1 |
| | 228 / Ende | -0,3 | -0,7 | 2,3 | 0,0 | 3,5 | 0,1 |
| | 190 / Ende | -17,2 | 0,0 | 0,0 | 0,0 | 0,0 | 0,0 |
| CO9(19) | 228 / Anfang | 0,7 | 0,0 | -0,7 | 0,0 | -0,1 | 0,0 |
| | 228 / Ende | -0,7 | 0,0 | 0,0 | 0,0 | 0,1 | 0,0 |
| | 190 / Ende | -0,7 | 0,0 | 0,0 | 0,1 | 0,0 | 0,0 |
| CO11(20) | 228 / Anfang | -0,3 | -0,3 | -21,0 | 0,0 | -1,6 | 0,0 |
| | 228 / Ende | 0,3 | 0,1 | 5,1 | 0,0 | 1,6 | 0,0 |
| | 190 / Ende | -15,9 | 0,0 | 0,0 | 0,0 | 0,0 | 0,0 |
| CO11(21) | 228 / Anfang | -0,4 | -0,4 | -23,1 | 0,0 | -1,8 | 0,0 |
| | 228 / Ende | 0,4 | 0,1 | 5,6 | 0,0 | 1,8 | 0,0 |
| | 190 / Ende | -17,5 | 0,0 | 0,0 | 0,0 | 0,0 | 0,0 |
| CO11(22) | 228 / Anfang | 0,2 | 0,4 | -26,0 | 0,0 | -3,2 | -0,1 |
| | 228 / Ende | -0,2 | -0,7 | 4,7 | 0,0 | 3,2 | 0,1 |
| | 190 / Ende | -21,4 | 0,0 | 0,0 | 0,0 | 0,0 | 0,0 |
| CO11(2) | 228 / Anfang | -1,3 | -0,6 | -17,4 | 0,0 | -1,0 | 0,1 |
| | 228 / Ende | 1,4 | 0,4 | 5,3 | 0,0 | 1,0 | -0,1 |
| | 190 / Ende | -12,0 | 0,0 | 0,0 | 0,0 | 0,0 | 0,0 |
| CO11(3) | 228 / Anfang | -0,9 | -0,7 | -27,2 | 0,0 | -5,3 | 0,1 |
| | 228 / Ende | 0,9 | 0,3 | 4,0 | 0,0 | 5,3 | -0,1 |
| | 190 / Ende | -23,2 | 0,0 | 0,0 | 0,0 | 0,0 | 0,0 |
| CO11(4) | 228 / Anfang | 0,2 | 0,6 | -19,9 | 0,0 | -3,4 | -0,1 |
| | 228 / Ende | -0,2 | -0,7 | 2,3 | 0,0 | 3,4 | 0,1 |
| | 190 / Ende | -17,6 | 0,0 | 0,0 | 0,0 | 0,0 | 0,0 |
| CO11(5) | 228 / Anfang | -0,2 | -0,3 | -37,0 | 0,0 | -8,2 | 0,1 |
| | 228 / Ende | 0,2 | -0,4 | 3,1 | 0,0 | 8,2 | -0,1 |

| Name | Bauteil | N [kN] | Vy [kN] | Vz [kN] | Mx [kNm] | My [kNm] | Mz [kNm] |
|---|---|---|---|---|---|---|---|
| | 190 / Ende | -34,0 | 0,0 | 0,0 | 0,0 | 0,0 | 0,0 |
| CO11(6) | 228 / Anfang | -0,1 | -0,1 | -31,6 | 0,0 | -5,1 | 0,0 |
| | 228 / Ende | 0,2 | -0,4 | 4,6 | 0,0 | 5,1 | 0,0 |
| | 190 / Ende | -27,1 | 0,0 | 0,0 | 0,0 | 0,0 | 0,0 |
| CO11(7) | 228 / Anfang | -1,2 | -0,6 | -17,0 | 0,0 | -1,1 | 0,1 |
| | 228 / Ende | 1,3 | 0,4 | 5,3 | 0,0 | 1,1 | -0,1 |
| | 190 / Ende | -11,7 | 0,0 | 0,0 | 0,0 | 0,0 | 0,0 |
| CO11(8) | 228 / Anfang | 0,0 | -0,2 | -35,8 | 0,0 | -9,5 | 0,1 |
| | 228 / Ende | 0,0 | -0,4 | 1,6 | 0,0 | 9,5 | -0,1 |
| | 190 / Ende | -34,2 | 0,0 | 0,0 | 0,0 | 0,0 | 0,0 |
| CO11(9) | 228 / Anfang | -1,2 | -0,3 | -5,2 | 0,0 | 2,9 | 0,0 |
| | 228 / Ende | 1,2 | 0,3 | 5,4 | 0,0 | -2,9 | 0,0 |
| | 190 / Ende | 0,1 | 0,0 | 0,0 | 0,0 | 0,0 | 0,0 |
| CO11(10) | 228 / Anfang | -0,4 | -0,6 | -33,4 | 0,0 | -8,7 | 0,2 |
| | 228 / Ende | 0,4 | 0,0 | 1,8 | 0,0 | 8,7 | -0,1 |
| | 190 / Ende | -31,6 | 0,0 | 0,0 | 0,0 | 0,0 | 0,0 |

## Fehlende Lasten

| Name | X [kN] | Y [kN] | Z [kN] | Mx [kNm] | My [kNm] | Mz [kNm] |
|---|---|---|---|---|---|---|
| CO11(12) | 0,0 | 0,6 | 0,0 | 0,3 | 0,0 | 0,0 |
| CO11(13) | 0,0 | 0,0 | 0,0 | 0,0 | 0,0 | 0,0 |
| CO11(14) | 0,0 | 0,1 | 0,0 | 0,1 | 0,0 | 0,0 |
| CO11(15) | 0,0 | 0,3 | 0,0 | 0,2 | 0,0 | 0,0 |
| CO11(16) | 0,1 | 0,3 | 0,0 | 0,2 | 0,0 | 0,0 |
| CO11(17) | 0,0 | 0,1 | 0,0 | 0,1 | 0,0 | 0,0 |
| CO11(18) | 0,0 | 0,1 | 0,0 | 0,2 | 0,0 | 0,0 |
| CO9(19) | -0,1 | 0,0 | 0,0 | 0,0 | 0,0 | 0,0 |
| CO11(20) | 0,0 | 0,2 | 0,0 | 0,2 | 0,0 | 0,0 |
| CO11(21) | 0,0 | 0,3 | 0,0 | 0,2 | 0,0 | 0,0 |
| CO11(22) | 0,0 | 0,3 | 0,0 | 0,2 | 0,0 | 0,0 |
| CO11(2) | 0,0 | 0,2 | 0,0 | 0,1 | 0,0 | 0,0 |
| CO11(3) | 0,1 | 0,5 | 0,0 | 0,2 | 0,0 | 0,0 |
| CO11(4) | 0,0 | 0,1 | 0,0 | 0,2 | 0,0 | 0,0 |
| CO11(5) | 0,0 | 0,7 | 0,0 | 0,3 | 0,0 | 0,0 |
| CO11(6) | 0,0 | 0,5 | 0,0 | 0,3 | 0,0 | 0,0 |
| CO11(7) | 0,0 | 0,2 | 0,0 | 0,1 | 0,0 | 0,0 |
| CO11(8) | 0,0 | 0,6 | 0,0 | 0,3 | 0,0 | 0,0 |
| CO11(9) | 0,0 | 0,0 | 0,0 | 0,0 | 0,0 | 0,0 |
| CO11(10) | 0,0 | 0,6 | 0,0 | 0,3 | 0,0 | 0,0 |

# Nachweis

## Übersicht

| Name | Wert | Nachweisstatus |
|---|---|---|
| Berechnung | 100,0% | OK |
| Platten | 0,0 < 5,0% | OK |
| Lokale Verformung | 0,0 < 3% | OK |
| Schrauben | 2,9 < 100% | OK |
| Schweißnähte | 34,5 < 100% | OK |
| Beulen | Nicht berechnet | |

## Platten

| Name | Material | $t_p$ [mm] | Lasten | $\sigma_{Ed}$ [MPa] | $\varepsilon_{Pl}$ [%] | $\sigma_{c,Ed}$ [MPa] | Status |
|---|---|---|---|---|---|---|---|
| 228-bfl 1 | Baustahl S 355 | 8,5 | CO11(8) | 91,7 | 0,0 | 12,3 | OK |
| 228-tfl 1 | Baustahl S 355 | 8,5 | CO11(8) | 73,6 | 0,0 | 0,0 | OK |
| 228-w 1 | Baustahl S 355 | 5,6 | CO11(12) | 84,3 | 0,0 | 0,0 | OK |
| 190 | Baustahl S 355 | 4,0 | CO11(12) | 90,0 | 0,0 | 0,0 | OK |
| Stirnblech1 | S 355 | 10,0 | CO11(8) | 65,0 | 0,0 | 16,2 | OK |
| Rippe1 | S 355 | 10,0 | CO11(8) | 59,3 | 0,0 | 0,0 | OK |

### Bemessungsdaten

| Material | $f_y$ [MPa] | $\varepsilon_{lim}$ [%] |
|---|---|---|
| Baustahl S 355 | 355,0 | 5,0 |
| S 355 | 355,0 | 5,0 |

### Erläuterung von Symbolen

| | |
|---|---|
| $t_p$ | Plattendicke |
| $\sigma_{Ed}$ | Vergleichsspannung |
| $\varepsilon_{Pl}$ | Plastische Dehnung |
| $\sigma_{c,Ed}$ | Kontaktspannung |
| $f_y$ | Streckgrenze |
| $\varepsilon_{lim}$ | Grenzwert plastische Dehnung |

## Lokale Verformung

| Name | $d_0$ [mm] | Lasten | $\delta$ [mm] | $\delta_{lim}$ [mm] | $\delta/d_0$ [%] | Nachweisstatus |
|---|---|---|---|---|---|---|
| 190 | 80 | CO11(10) | 0 | 2 | 0,0 | OK |

### Erläuterung von Symbolen

| | |
|---|---|
| $d_0$ | Querschnittsgröße |
| $\delta$ | Lokale Verformung im Querschnitt |
| $\delta_{lim}$ | Zulässige Verformung |

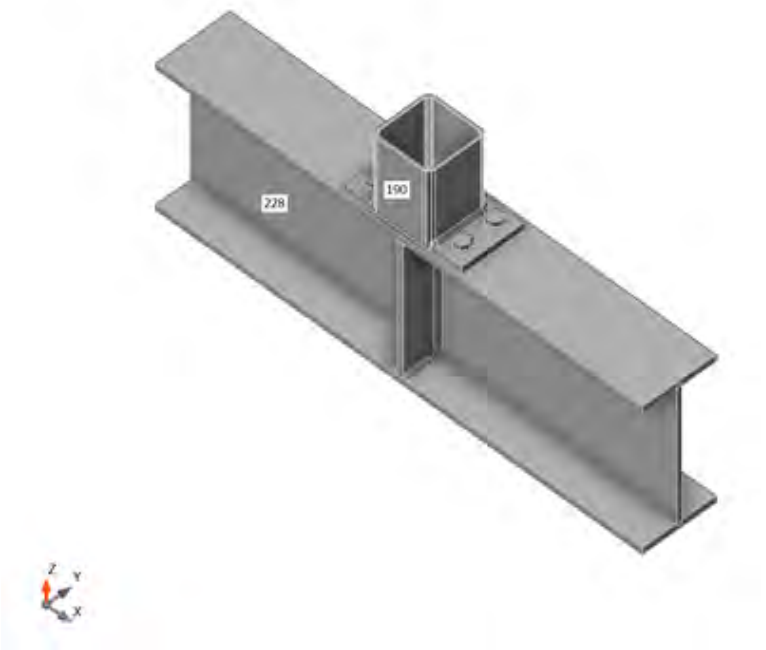


*Gesamt, CO11(8)*

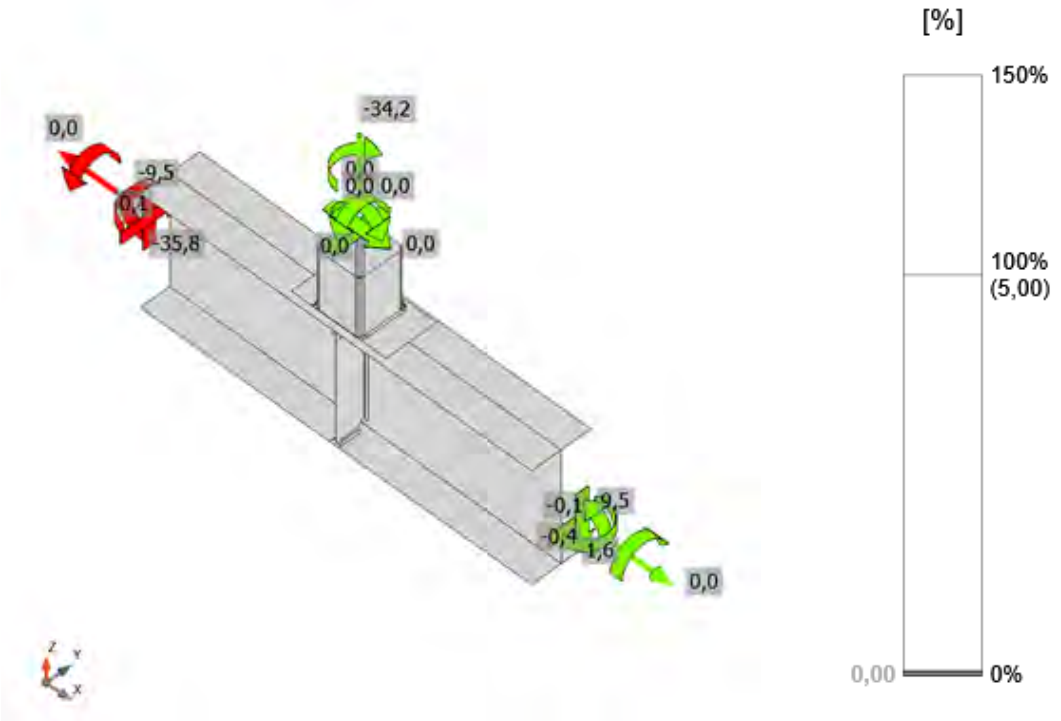


*Dehnung, CO11(8)*

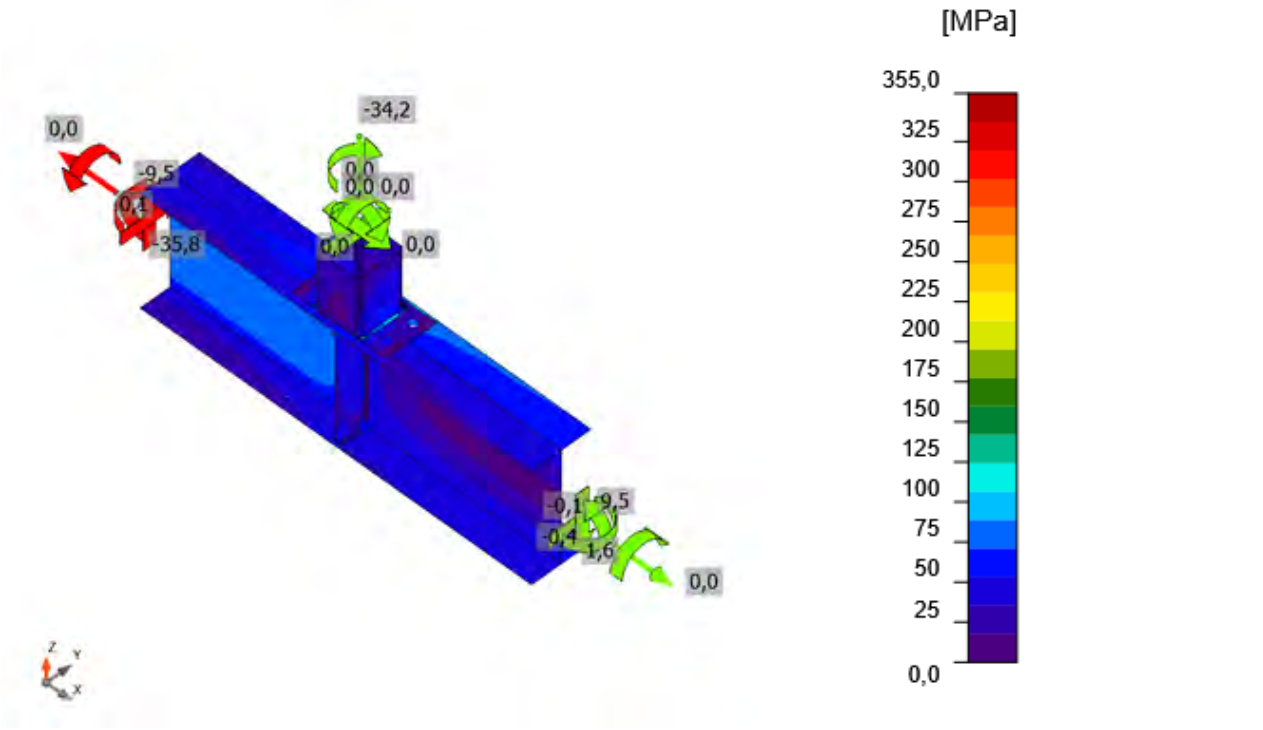


*Vergleichsspannung, CO11(8)*

## Schrauben

| Form | Position | Klasse | Lasten | $F_{t,Ed}$ [kN] | $F_{v,Ed}$ [kN] | $F_{b,Rd}$ [kN] | $Ut_t$ [%] | $Ut_s$ [%] | $Ut_{ts}$ [%] | Konstruktionsregeln | Status |
|---|---|---|---|---|---|---|---|---|---|---|---|
| 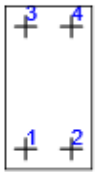 | B1 | M12 8.8 - 1 | CO11(12) | 0,7 | 0,6 | 80,1 | 1,5 | 1,9 | 2,9 | OK | OK |
| | B2 | M12 8.8 - 1 | CO11(8) | 0,2 | 0,5 | 75,1 | 0,3 | 1,7 | 1,9 | OK | OK |
| | B3 | M12 8.8 - 1 | CO11(8) | 0,0 | 0,8 | 85,2 | 0,0 | 2,5 | 2,5 | OK | OK |
| | B4 | M12 8.8 - 1 | CO11(12) | 0,2 | 0,4 | 67,9 | 0,3 | 1,1 | 1,3 | OK | OK |



### Bemessungsdaten

| Klasse | $F_{t,Rd}$ [kN] | $B_{p,Rd}$ [kN] | $F_{v,Rd}$ [kN] |
|---|---|---|---|
| M12 8.8 - 1 | 48,6 | 119,4 | 32,4 |

### Erläuterung von Symbolen

| | |
|---|---|
| $F_{t,Ed}$ | Zugkraft |
| $F_{v,Ed}$ | Resultierende der Schraubenscherkräfte Vy und Vz in Scherebenen |
| $F_{b,Rd}$ | Lochleibungstragfähigkeit der Platte nach EN 1993-1-8 Tab. 3.4 |
| $Ut_t$ | Ausnutzung unter Zug |
| $Ut_s$ | Ausnutzung unter Schub |
| $Ut_{ts}$ | Interaktion von Zug und Schub EN_1993-1-8 Tabelle 3.4 |
| $F_{t,Rd}$ | Zugtragfähigkeit der Schraube nach EN 1993-1-8 Tabelle 3.4 |
| $B_{p,Rd}$ | Durchstanztragfähigkeit nach EN 1993-1-8 Tabelle 3.4 |
| $F_{v,Rd}$ | Schertragfähigkeit der Schraube nach EN 1993-1-8 Tabelle 3.4 |

## Schweißnähte

| Position | Kante | $T_w$ [mm] | L [mm] | Lasten | $\sigma_{w,Ed}$ [MPa] | $\varepsilon_{Pl}$ [%] | $\sigma_{\perp}$ [MPa] | $\tau_{\perp}$ [MPa] | $\tau_{\parallel}$ [MPa] | Ut [%] | $Ut_c$ [%] | Konstruktionsregeln | Status |
|---|---|---|---|---|---|---|---|---|---|---|---|---|---|
| 228-bfl 1 | Rippe1 | ◢ 4,0 ◣ | 35 | CO11(12) | 68,7 | 0,0 | -36,9 | -33,3 | 3,0 | 15,8 | 11,9 | OK | OK |
| | | ◢ 4,0 ◣ | 35 | CO11(12) | 36,4 | 0,0 | -15,1 | 18,6 | -4,3 | 8,4 | 7,6 | OK | OK |
| 228-w 1 | Rippe1 | ◢ 4,0 ◣ | 158 | CO11(8) | 14,4 | 0,0 | -0,3 | 0,3 | 8,3 | 3,3 | 3,3 | OK | OK |
| | | ◢ 4,0 ◣ | 159 | CO11(8) | 41,7 | 0,0 | 1,7 | -1,8 | 24,0 | 9,6 | 8,6 | OK | OK |
| 228-tfl 1 | Rippe1 | ◢ 4,0 ◣ | 35 | CO11(8) | 23,7 | 0,0 | 17,8 | 9,0 | 0,4 | 5,4 | 5,4 | OK | OK |
| | | ◢ 4,0 ◣ | 35 | CO11(8) | 36,9 | 0,0 | -19,2 | 15,3 | -9,9 | 8,5 | 7,5 | OK | OK |
| Stirnblech1 | 190 | ◢ 4,0 | 214 | CO11(8) | 150,2 | 0,0 | -63,4 | 73,2 | -28,6 | 34,5 | 20,4 | OK | OK |

**Bemessungsdaten**

| Material | $f_u$ [MPa] | $\beta_w$ [-] | $\sigma_{w,Rd}$ [MPa] | 0.9 σ [MPa] |
|---|---|---|---|---|
| S 355 | 490,0 | 0,90 | 435,6 | 352,8 |

**Erläuterung von Symbolen**

| | |
|---|---|
| $T_w$ | Nahtdicke a |
| L | Länge |
| $\sigma_{w,Ed}$ | Vergleichsspannung |
| $\varepsilon_{Pl}$ | Dehnung |
| $\sigma_{\perp}$ | Senkrechte Spannung |
| $\tau_{\perp}$ | Scherspannung senkrecht zur Schweißnahtachse |
| $\tau_{\parallel}$ | Scherspannung parallel zur Schweißnahtachse |
| Ut | Ausnutzung |
| $Ut_c$ | Schätzung der Schweißnahtkapazität |
| ◢ | Kehlnaht |
| $f_u$ | Grenzfestigkeit der Schweißnaht |
| $\beta_w$ | Korrelationsfaktor nach EN 1993-1-8 Tab. 4.1 |
| $\sigma_{w,Rd}$ | Tragfähigkeit der Schweißnaht |
| 0.9 σ | Senkrechter Spannungswiderstand - 0.9*fu / γM2 |

## Beulen

**Die Beulanalyse wurde nicht berechnet.**

## Normeinstellungen

| Position | Wert | Einheit | Bezug |
|---|---|---|---|
| Sicherheitsfaktor $\gamma_{M0}$ | 1,00 | - | EN 1993-1-1 – 6.1 |
| Sicherheitsfaktor $\gamma_{M1}$ | 1,00 | - | EN 1993-1-1 – 6.1 |
| Sicherheitsfaktor $\gamma_{M2}$ | 1,25 | - | EN 1993-1-1 – 6.1 |
| Sicherheitsfaktor $\gamma_{M3}$ | 1,25 | - | EN 1993-1-8 – Table 2.1 |
| Sicherheitsfaktor $\gamma_{C}$ | 1,50 | - | EN 1992-1-1 – 2.4.2.4 |
| Sicherheitsfaktor $\gamma_{Inst}$ | 1,20 | - | EN 1992-4 – Table 4.1 |
| Verbindungskoeffizient βj | 0,67 | - | EN 1993-1-8 – 6.2.5(7) |
| Wirksame Fläche - Einfluss der Netzgröße | 0,10 | - | |
| Reibungsbeiwert - Beton | 0,25 | - | EN 1993-1-8 |
| Reibungskoeffizient bei gleitfesten Verbindungen | 0,30 | - | EN 1993-1-8 – Table 3.7 |
| Plastische Dehnung - Grenzwert | 0,05 | - | EN 1993-1-5 |
| Konstruktionsregeln | Ja | | |
| Distance between bolts [d0] | 2,20 | - | EN 1993-1-8 – Table 3.3 |
| Distance between bolts and edge [d0] | 1,20 | - | EN 1993-1-8 – Table 3.3 |
| Nachweis der Tragfähigkeit bei Betonausbruch | Beide | | |
| Berechnetes αb für Lochleibungsnachweis anwenden. | Ja | | EN 1993-1-8 – Table 3.4 |
| Gerissener Beton | Ja | | EN 1992-4 |
| Überprüfen der lokalen Verformung | Ja | | |
| Lokale Verformung - Grenzwert | 0,03 | - | CIDECT DG 1, 3 – 1.1 |
| Geometrische Nichtlinearität (GMNA) | Ja | | Analyse mit großen Verformungen für Verbindungen mit Hohlprofilen |
| Ausgesteiftes System | Nein | | EN 1993-1-8 – 5.2.2.5 |

| | |
|---|---|
| **Projekt:** | **IdeaStatiCa-Stadion_Fazanerija_JK-6_BR - 1011** |
| **Projektnummer:** | **Detajl D9-O5** |
| **Autor:** | **mag. Igor Gorup dipl. ing.** |

## Projektdaten

| | |
|---|---|
| Projektname | IdeaStatiCa-Stadion_Fazanerija_JK-6_BR - 1011 |
| Projektnummer | Detajl D9-O5 |
| Autor | mag. Igor Gorup dipl. ing. |
| Beschreibung | |
| Datum | 18.06.2025 |
| Norm | EN |

## Material

| | |
|---|---|
| Stahl | Baustahl S 355, Baustahl S 235, S 355 |

# Projektposition 1011

## Bemessung

| | |
|---|---|
| Name | 1011 |
| Beschreibung | |
| Berechnung | Spannung, Dehnung/ Lasten im Gleichgewicht |

### Bauteile

#### Geometrie

| Name | Querschnitt | β – Rotation [°] | Y - Rotation [°] | α - Rotation [°] | Abstand ex [mm] | Abstand ey [mm] | Abstand ez [mm] |
|---|---|---|---|---|---|---|---|
| 50 | 24 - IPE240 | 0,0 | 0,0 | -180,0 | 0 | 0 | 0 |
| 87 | 822 - I290 | 0,0 | 90,0 | -90,0 | 0 | 0 | 0 |
| 158 | 24 - IPE240 | 0,0 | 0,0 | -180,0 | 0 | 0 | 0 |

#### Auflager und Kräfte

| Name | Auflager | Kräfte in | X [mm] |
|---|---|---|---|
| 50 / anfang | | Position | 0 |
| 87 / anfang | N-Vy-Vz-Mx-My-Mz | Position | 0 |
| 87 / ende | | Position | 0 |
| 158 / ende | | Position | 0 |

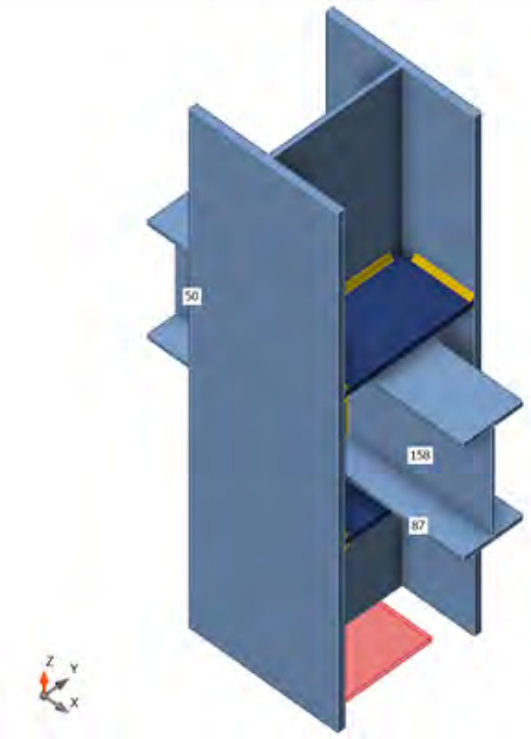


### Querschnitte

| Name | Material |
|---|---|
| 24 - IPE240 | Baustahl S 355 |
| 822 - I290 | S 355 |

## Schrauben

| Name | Durchmesser [mm] | $f_y$ [MPa] | $f_u$ [MPa] | Bruttofläche [$mm^2$] |
|---|---|---|---|---|
| M16 8.8 | 16 | 640,0 | 800,0 | 201 |

## Lasteinwirkungen (Kräfte im Gleichgewicht)

| Name | Bauteil | N [kN] | Vy [kN] | Vz [kN] | Mx [kNm] | My [kNm] | Mz [kNm] |
|---|---|---|---|---|---|---|---|
| CO11(25) | 50 / Anfang | 3,4 | 12,0 | -17,4 | 0,0 | 33,5 | -4,2 |
| | 87 / Anfang | 461,6 | -0,5 | 35,4 | 0,1 | 44,3 | -5,2 |
| | 87 / Ende | -434,2 | 4,5 | -18,4 | -0,2 | -44,4 | 4,7 |
| | 158 / Ende | -7,3 | 4,9 | 44,8 | 0,0 | -33,9 | 4,2 |
| CO11(26) | 50 / Anfang | -7,9 | -12,9 | -111,9 | -0,1 | -16,6 | 4,4 |
| | 87 / Anfang | 588,5 | 9,3 | -37,8 | -0,2 | -28,0 | -26,0 |
| | 87 / Ende | -675,2 | -5,7 | 19,9 | -0,1 | 28,1 | -14,2 |
| | 158 / Ende | 4,3 | -5,0 | 25,3 | 0,0 | -23,5 | -4,7 |
| CO11(27) | 50 / Anfang | -3,6 | 18,7 | -34,1 | 0,0 | 19,0 | -6,4 |
| | 87 / Anfang | 61,9 | 9,3 | 41,4 | 0,1 | 48,3 | -23,2 |
| | 87 / Ende | -48,2 | -3,3 | -15,1 | 0,0 | -48,4 | -6,3 |
| | 158 / Ende | -2,4 | 7,6 | 47,7 | 0,1 | -48,5 | 6,5 |
| CO11(28) | 50 / Anfang | -3,6 | -14,7 | -29,0 | 0,0 | 21,0 | 5,0 |
| | 87 / Anfang | 398,9 | 0,5 | -28,7 | 0,0 | -28,5 | -5,5 |
| | 87 / Ende | -398,5 | 4,3 | 8,7 | 0,1 | 28,6 | 5,2 |
| | 158 / Ende | -1,2 | -5,3 | 29,4 | -0,1 | -21,4 | -4,9 |
| CO11(29) | 50 / Anfang | -2,5 | 12,1 | -48,0 | 0,0 | 19,1 | -4,2 |
| | 87 / Anfang | 227,0 | 8,1 | 25,9 | 0,1 | 34,0 | -22,0 |
| | 87 / Ende | -225,2 | -2,9 | -8,9 | 0,0 | -34,0 | -6,9 |
| | 158 / Ende | -2,6 | 4,9 | 49,8 | 0,0 | -48,1 | 4,2 |
| CO9(30) | 50 / Anfang | 20,3 | -10,9 | 117,4 | 0,0 | 44,3 | 3,6 |
| | 87 / Anfang | 113,5 | -26,2 | -15,4 | 0,0 | -21,6 | 56,8 |
| | 87 / Ende | -7,0 | 10,9 | 0,7 | 0,0 | 21,7 | 15,6 |
| | 158 / Ende | -5,4 | -3,7 | -10,9 | 0,0 | 28,1 | -3,5 |
| CO11(31) | 50 / Anfang | -2,7 | -14,3 | -60,7 | 0,0 | 20,0 | 4,9 |
| | 87 / Anfang | 701,9 | 0,9 | -28,8 | -0,1 | -22,6 | -9,6 |
| | 87 / Ende | -723,6 | 3,8 | 9,1 | 0,1 | 22,7 | 2,4 |
| | 158 / Ende | -2,1 | -5,3 | 39,0 | -0,1 | -27,2 | -4,9 |
| CO11(32) | 50 / Anfang | -4,4 | 18,2 | -10,0 | 0,0 | 24,7 | -6,2 |
| | 87 / Anfang | -144,8 | 8,8 | 40,0 | 0,1 | 42,5 | -20,3 |
| | 87 / Ende | 180,4 | -2,2 | -14,5 | 0,0 | -42,6 | -3,2 |
| | 158 / Ende | -2,1 | 7,4 | 45,5 | 0,1 | -48,2 | 6,3 |
| CO11(33) | 50 / Anfang | -8,5 | -13,8 | -88,2 | 0,0 | 3,5 | 4,8 |
| | 87 / Anfang | 434,3 | 9,3 | -37,0 | -0,2 | -32,1 | -25,6 |
| | 87 / Ende | -482,1 | -3,6 | 17,9 | 0,0 | 32,2 | -9,4 |
| | 158 / Ende | 2,8 | -5,3 | 40,5 | -0,1 | -38,5 | -5,0 |
| CO11(34) | 50 / Anfang | -4,8 | -7,1 | -128,4 | 0,0 | -5,7 | 2,5 |
| | 87 / Anfang | 830,7 | 8,7 | -23,3 | -0,2 | -7,8 | -28,6 |
| | 87 / Ende | -914,9 | -5,0 | 13,3 | -0,1 | 7,9 | -15,1 |
| | 158 / Ende | 1,0 | -2,9 | 44,3 | -0,1 | -38,0 | -2,8 |
| CO11(35) | 50 / Anfang | 1,3 | 18,4 | 17,7 | 0,0 | 40,9 | -6,4 |
| | 87 / Anfang | 92,4 | 0,6 | 49,6 | 0,1 | 53,1 | -5,2 |
| | 87 / Ende | -30,1 | 5,0 | -23,9 | -0,2 | -53,2 | 8,0 |
| | 158 / Ende | -7,0 | 7,4 | 44,6 | 0,1 | -38,2 | 6,3 |
| CO11(36) | 50 / Anfang | 4,6 | 1,2 | -44,5 | 0,0 | 26,9 | -0,4 |

| Name | Bauteil | N [kN] | Vy [kN] | Vz [kN] | Mx [kNm] | My [kNm] | Mz [kNm] |
|---|---|---|---|---|---|---|---|
| | 87 / Anfang | 756,2 | -2,4 | 9,5 | 0,1 | 21,0 | -2,7 |
| | 87 / Ende | -759,5 | 4,7 | -7,7 | -0,1 | -21,0 | 3,1 |
| | 158 / Ende | -6,9 | 0,6 | 41,2 | 0,0 | -26,5 | 0,4 |
| CO11(37) | 50 / Anfang | -2,8 | -14,4 | -55,5 | 0,0 | 14,7 | 4,9 |
| | 87 / Anfang | 634,3 | 0,8 | -29,1 | -0,1 | -24,0 | -8,3 |
| | 87 / Ende | -658,8 | 3,4 | 9,4 | 0,1 | 24,0 | 2,2 |
| | 158 / Ende | -1,4 | -5,3 | 31,1 | -0,1 | -20,8 | -4,9 |
| CO11(15) | 50 / Anfang | 0,7 | -8,0 | -69,8 | 0,0 | 19,1 | 2,8 |
| | 87 / Anfang | 865,2 | -0,3 | -13,7 | 0,0 | -2,4 | -8,4 |
| | 87 / Ende | -894,2 | 3,7 | 2,7 | 0,0 | 2,4 | 0,9 |
| | 158 / Ende | -4,1 | -2,9 | 40,9 | -0,1 | -26,5 | -2,8 |
| CO11(16) | 50 / Anfang | -4,4 | 17,1 | -4,9 | 0,0 | 12,0 | -5,8 |
| | 87 / Anfang | -222,3 | 7,9 | 36,9 | 0,1 | 38,3 | -17,0 |
| | 87 / Ende | 246,0 | -3,2 | -13,0 | 0,0 | -38,4 | -4,2 |
| | 158 / Ende | -0,3 | 6,8 | 28,5 | 0,1 | -33,3 | 5,8 |
| CO11(18) | 50 / Anfang | -8,0 | -13,4 | -117,2 | 0,0 | -3,9 | 4,7 |
| | 87 / Anfang | 668,5 | 9,8 | -37,9 | -0,2 | -27,8 | -29,1 |
| | 87 / Ende | -743,5 | -4,7 | 19,2 | -0,1 | 27,9 | -13,1 |
| | 158 / Ende | 2,8 | -5,3 | 42,3 | -0,1 | -38,3 | -5,0 |
| CO11(19) | 50 / Anfang | -8,4 | -13,9 | -81,8 | 0,0 | -1,3 | 4,7 |
| | 87 / Anfang | 367,6 | 9,0 | -37,1 | -0,2 | -33,2 | -23,6 |
| | 87 / Ende | -417,0 | -4,0 | 18,0 | 0,0 | 33,3 | -9,4 |
| | 158 / Ende | 3,4 | -5,2 | 32,5 | -0,1 | -31,8 | -4,9 |
| CO11(20) | 50 / Anfang | 0,2 | 17,9 | 39,7 | 0,0 | 45,7 | -6,3 |
| | 87 / Anfang | -115,5 | 0,3 | 47,8 | 0,1 | 47,1 | -3,1 |
| | 87 / Ende | 197,6 | 6,0 | -22,8 | -0,2 | -47,2 | 10,5 |
| | 158 / Ende | -6,5 | 7,1 | 42,5 | 0,1 | -38,2 | 6,1 |
| CO11(23) | 50 / Anfang | -8,0 | -13,5 | -110,8 | 0,0 | -8,8 | 4,6 |
| | 87 / Anfang | 601,7 | 9,5 | -38,0 | -0,2 | -28,9 | -27,2 |
| | 87 / Ende | -678,3 | -5,1 | 19,3 | -0,1 | 29,0 | -13,2 |
| | 158 / Ende | 3,5 | -5,2 | 34,3 | -0,1 | -31,6 | -4,9 |
| CO11(24) | 50 / Anfang | -3,7 | 18,2 | -37,5 | 0,0 | 17,9 | -6,2 |
| | 87 / Anfang | 88,3 | 9,4 | 40,8 | 0,1 | 47,9 | -23,5 |
| | 87 / Ende | -78,5 | -3,4 | -15,2 | 0,0 | -48,0 | -6,5 |
| | 158 / Ende | -2,3 | 7,4 | 47,3 | 0,1 | -47,9 | 6,4 |
| CO11(2) | 50 / Anfang | -8,5 | -13,2 | -89,3 | 0,0 | -4,3 | 4,5 |
| | 87 / Anfang | 421,2 | 9,0 | -36,8 | -0,2 | -31,3 | -24,3 |
| | 87 / Ende | -479,0 | -4,2 | 18,5 | 0,0 | 31,4 | -10,4 |
| | 158 / Ende | 3,6 | -5,0 | 31,5 | -0,1 | -30,4 | -4,7 |
| CO11(5) | 50 / Anfang | -4,9 | -6,7 | -129,8 | 0,0 | -13,7 | 2,4 |
| | 87 / Anfang | 817,5 | 8,6 | -23,3 | -0,2 | -7,3 | -27,4 |
| | 87 / Ende | -912,0 | -5,6 | 13,9 | -0,1 | 7,3 | -16,2 |
| | 158 / Ende | 1,8 | -2,7 | 35,3 | 0,0 | -29,9 | -2,6 |
| CO11(8) | 50 / Anfang | -3,6 | 18,3 | -35,2 | 0,0 | 11,2 | -6,2 |
| | 87 / Anfang | 49,7 | 9,0 | 40,1 | 0,1 | 47,0 | -21,9 |
| | 87 / Ende | -46,2 | -3,9 | -14,4 | 0,0 | -47,1 | -7,3 |
| | 158 / Ende | -1,5 | 7,4 | 38,7 | 0,1 | -40,3 | 6,4 |

| Name | Bauteil | N [kN] | Vy [kN] | Vz [kN] | Mx [kNm] | My [kNm] | Mz [kNm] |
|---|---|---|---|---|---|---|---|
| CO11(10) | 50 / Anfang | -0,8 | -8,5 | -17,2 | 0,0 | 34,8 | 2,9 |
| | 87 / Anfang | 399,5 | -0,7 | -13,3 | 0,0 | -12,0 | -3,7 |
| | 87 / Ende | -375,4 | 5,6 | 1,7 | 0,1 | 12,0 | 7,1 |
| | 158 / Ende | -4,1 | -3,0 | 41,4 | -0,1 | -31,3 | -2,8 |
| CO11(12) | 50 / Anfang | -4,9 | -6,8 | -123,5 | 0,0 | -18,6 | 2,4 |
| | 87 / Anfang | 750,8 | 8,3 | -23,7 | -0,2 | -8,7 | -25,6 |
| | 87 / Ende | -847,0 | -6,0 | 14,1 | -0,1 | 8,8 | -16,3 |
| | 158 / Ende | 2,4 | -2,7 | 27,3 | 0,0 | -23,3 | -2,6 |
| CO11(13) | 50 / Anfang | 1,4 | 11,2 | 27,0 | 0,0 | 46,3 | -4,0 |
| | 87 / Anfang | 49,9 | -0,9 | 33,0 | 0,0 | 33,2 | -1,5 |
| | 87 / Ende | 21,6 | 6,3 | -17,1 | -0,1 | -33,2 | 10,1 |
| | 158 / Ende | -6,8 | 4,6 | 44,5 | 0,0 | -37,6 | 3,9 |

## Fehlende Lasten

| Name | X [kN] | Y [kN] | Z [kN] | Mx [kNm] | My [kNm] | Mz [kNm] |
|---|---|---|---|---|---|---|
| CO11(25) | 0,0 | 0,0 | 0,0 | 0,0 | 0,0 | 0,0 |
| CO11(26) | -0,1 | -0,1 | 0,0 | 0,0 | 0,0 | 0,0 |
| CO11(27) | 0,0 | 0,0 | 0,0 | 0,0 | 0,0 | 0,0 |
| CO11(28) | 0,0 | 0,0 | 0,0 | 0,0 | 0,0 | 0,0 |
| CO11(29) | 0,0 | 0,0 | 0,0 | 0,0 | 0,0 | 0,0 |
| CO9(30) | -0,4 | -0,1 | 0,0 | 0,0 | 0,0 | 0,0 |
| CO11(31) | 0,0 | -0,1 | 0,0 | 0,0 | 0,0 | 0,0 |
| CO11(32) | 0,0 | 0,0 | 0,0 | 0,0 | 0,0 | 0,0 |
| CO11(33) | -0,1 | 0,0 | 0,0 | 0,0 | 0,0 | 0,0 |
| CO11(34) | -0,1 | 0,0 | 0,0 | 0,0 | 0,0 | 0,0 |
| CO11(35) | 0,0 | 0,0 | 0,0 | 0,0 | 0,0 | 0,0 |
| CO11(36) | 0,0 | 0,0 | 0,0 | 0,0 | 0,0 | 0,0 |
| CO11(37) | 0,0 | -0,1 | 0,0 | 0,0 | 0,0 | 0,0 |
| CO11(15) | 0,0 | -0,1 | 0,0 | 0,0 | 0,0 | 0,0 |
| CO11(16) | 0,0 | 0,0 | 0,0 | 0,0 | 0,0 | 0,0 |
| CO11(18) | -0,1 | -0,1 | 0,0 | 0,0 | 0,0 | 0,0 |
| CO11(19) | -0,1 | 0,0 | 0,0 | 0,0 | 0,0 | 0,0 |
| CO11(20) | 0,0 | 0,0 | 0,0 | 0,0 | 0,0 | 0,0 |
| CO11(23) | -0,1 | -0,1 | 0,0 | 0,0 | 0,0 | 0,0 |
| CO11(24) | 0,0 | 0,0 | 0,0 | 0,0 | 0,0 | 0,0 |
| CO11(2) | -0,1 | 0,0 | 0,0 | 0,0 | 0,0 | 0,0 |
| CO11(5) | -0,1 | 0,0 | 0,0 | 0,0 | 0,0 | 0,0 |
| CO11(8) | 0,0 | 0,0 | 0,0 | 0,0 | 0,0 | 0,0 |
| CO11(10) | 0,0 | 0,0 | 0,0 | 0,0 | 0,0 | 0,0 |
| CO11(12) | -0,1 | 0,0 | 0,0 | 0,0 | 0,0 | 0,0 |
| CO11(13) | 0,0 | 0,0 | 0,0 | 0,0 | 0,0 | 0,0 |

# Nachweis

## Übersicht

| Name | Wert | Nachweisstatus |
|---|---|---|
| Berechnung | 100,0% | OK |
| Platten | 0,5 < 5,0% | OK |
| Schrauben | 87,3 < 100% | OK |
| Schweißnähte | 98,6 < 100% | OK |
| Beulen | Nicht berechnet | |

## Platten

| Name | Material | $t_p$ [mm] | Lasten | $\sigma_{Ed}$ [MPa] | $\varepsilon_{Pl}$ [%] | $\sigma_{c,Ed}$ [MPa] | Status |
|---|---|---|---|---|---|---|---|
| 50-bfl 1 | Baustahl S 355 | 9,8 | CO11(20) | 355,3 | 0,2 | 0,0 | OK |
| 50-tfl 1 | Baustahl S 355 | 9,8 | CO9(30) | 356,0 | 0,5 | 0,0 | OK |
| 50-w 1 | Baustahl S 355 | 6,2 | CO9(30) | 355,6 | 0,3 | 0,0 | OK |
| 87-bfl 1 | S 355 | 14,0 | CO9(30) | 174,2 | 0,0 | 0,0 | OK |
| 87-tfl 1 | S 355 | 14,0 | CO9(30) | 168,9 | 0,0 | 0,0 | OK |
| 87-w 1 | S 355 | 8,5 | CO9(30) | 355,3 | 0,1 | 120,7 | OK |
| 158-bfl 1 | Baustahl S 355 | 9,8 | CO9(30) | 355,8 | 0,4 | 0,0 | OK |
| 158-tfl 1 | Baustahl S 355 | 9,8 | CO11(27) | 355,7 | 0,3 | 0,0 | OK |
| 158-w 1 | Baustahl S 355 | 6,2 | CO9(30) | 355,4 | 0,2 | 0,0 | OK |
| Stirnblech1a | S 355 | 15,0 | CO9(30) | 355,5 | 0,2 | 404,6 | OK |
| Stirnblech1b | S 355 | 15,0 | CO9(30) | 355,6 | 0,3 | 306,4 | OK |
| Rippe1a | S 355 | 15,0 | CO9(30) | 324,5 | 0,0 | 0,0 | OK |
| Rippe1b | S 355 | 15,0 | CO9(30) | 314,3 | 0,0 | 0,0 | OK |
| Rippe1c | S 355 | 15,0 | CO9(30) | 301,2 | 0,0 | 0,0 | OK |
| Rippe1d | S 355 | 15,0 | CO9(30) | 296,5 | 0,0 | 0,0 | OK |

### Bemessungsdaten

| Material | $f_y$ [MPa] | $\varepsilon_{lim}$ [%] |
|---|---|---|
| Baustahl S 355 | 355,0 | 5,0 |
| S 355 | 355,0 | 5,0 |

### Erläuterung von Symbolen

| | |
|---|---|
| $t_p$ | Plattendicke |
| $\sigma_{Ed}$ | Vergleichsspannung |
| $\varepsilon_{Pl}$ | Plastische Dehnung |
| $\sigma_{c,Ed}$ | Kontaktspannung |
| $f_y$ | Streckgrenze |
| $\varepsilon_{lim}$ | Grenzwert plastische Dehnung |

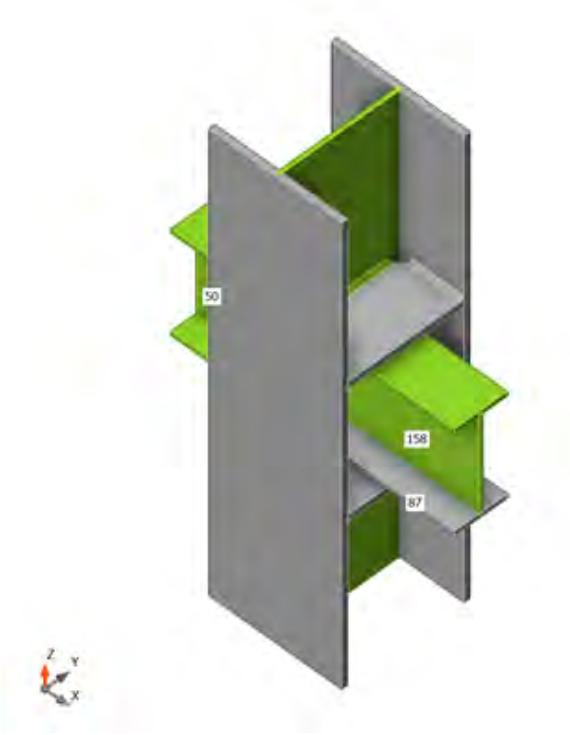


*Gesamt, CO9(30)*

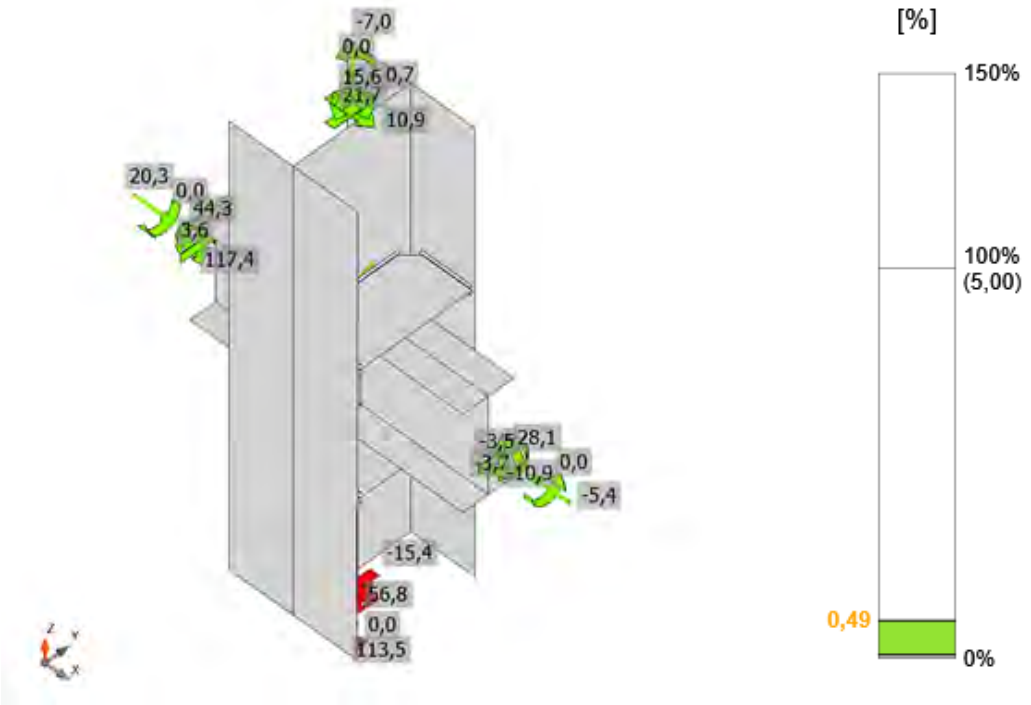


*Dehnung, CO9(30)*

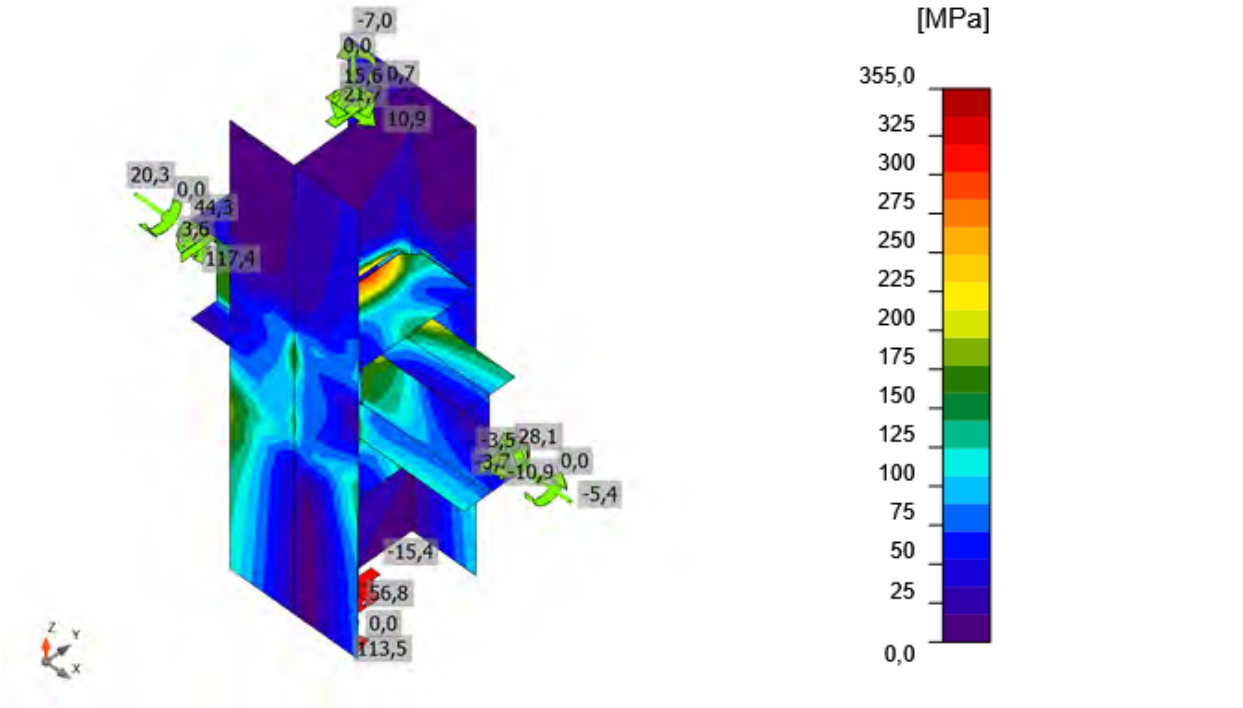


*Vergleichsspannung, CO9(30)*

## Schrauben

| Form | Position | Klasse | Lasten | $F_{t,Ed}$ [kN] | $F_{v,Ed}$ [kN] | $F_{b,Rd}$ [kN] | $Ut_t$ [%] | $Ut_s$ [%] | $Ut_{ts}$ [%] | Konstruktionsregeln | Status |
|---|---|---|---|---|---|---|---|---|---|---|---|
| 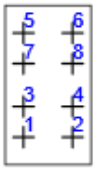 | B1 | M16 8.8 - 1 | CO9(30) | 25,0 | 17,0 | 133,3 | 27,7 | 28,1 | 47,9 | OK | OK |
| | B2 | M16 8.8 - 1 | CO9(30) | 53,0 | 17,5 | 133,3 | 58,6 | 29,0 | 70,9 | OK | OK |
| | B3 | M16 8.8 - 1 | CO9(30) | 24,1 | 14,3 | 90,1 | 26,7 | 23,8 | 42,8 | OK | OK |
| | B4 | M16 8.8 - 1 | CO9(30) | 23,4 | 13,9 | 90,1 | 25,9 | 23,1 | 41,6 | OK | OK |
| | B5 | M16 8.8 - 1 | CO11(27) | 78,5 | 6,0 | 159,0 | 86,8 | 10,0 | 72,0 | OK | OK |
| | B6 | M16 8.8 - 1 | CO11(34) | 73,5 | 17,6 | 159,0 | 81,3 | 29,2 | 87,3 | OK | OK |
| | B7 | M16 8.8 - 1 | CO11(27) | 69,7 | 5,9 | 116,7 | 77,0 | 9,7 | 64,8 | OK | OK |
| | B8 | M16 8.8 - 1 | CO11(18) | 39,7 | 15,5 | 90,1 | 43,9 | 25,7 | 57,0 | OK | OK |



**Bemessungsdaten**

| Klasse | $F_{t,Rd}$ [kN] | $B_{p,Rd}$ [kN] | $F_{v,Rd}$ [kN] |
|---|---|---|---|
| M16 8.8 - 1 | 90,4 | 281,2 | 60,3 |

**Erläuterung von Symbolen**

| | |
|---|---|
| $F_{t,Ed}$ | Zugkraft |
| $F_{v,Ed}$ | Resultierende der Schraubenscherkräfte Vy und Vz in Scherebenen |
| $F_{b,Rd}$ | Lochleibungstragfähigkeit der Platte nach EN 1993-1-8 Tab. 3.4 |
| $Ut_t$ | Ausnutzung unter Zug |
| $Ut_s$ | Ausnutzung unter Schub |
| $Ut_{ts}$ | Interaktion von Zug und Schub EN_1993-1-8 Tabelle 3.4 |
| $F_{t,Rd}$ | Zugtragfähigkeit der Schraube nach EN 1993-1-8 Tabelle 3.4 |
| $B_{p,Rd}$ | Durchstanztragfähigkeit nach EN 1993-1-8 Tabelle 3.4 |
| $F_{v,Rd}$ | Schertragfähigkeit der Schraube nach EN 1993-1-8 Tabelle 3.4 |

## Schweißnähte

| Position | Kante | $T_w$ [mm] | L [mm] | Lasten | $\sigma_{w,Ed}$ [MPa] | $\varepsilon_{Pl}$ [%] | $\sigma_{\perp}$ [MPa] | $\tau_{\perp}$ [MPa] | $\tau_{\parallel}$ [MPa] | Ut [%] | $Ut_c$ [%] | Konstruktionsregeln | Status |
|---|---|---|---|---|---|---|---|---|---|---|---|---|---|
| Stirnblech1a | 50-bfl 1 | ◢ 6,0 ◣ | 120 | CO11(20) | 427,0 | 0,1 | 211,5 | 103,5 | 187,5 | 98,0 | 62,5 | OK | OK |
| | | ◢ 6,0 ◣ | 120 | CO11(26) | 426,9 | 0,1 | -180,3 | 148,9 | 166,6 | 98,0 | 71,2 | OK | OK |
| Stirnblech1a | 50-tfl 1 | ◢ 6,0 ◣ | 119 | CO9(30) | 429,3 | 1,4 | -180,5 | -189,4 | -121,2 | 98,6 | 91,1 | OK | OK |
| | | ◢ 6,0 ◣ | 120 | CO9(30) | 427,8 | 0,5 | -156,5 | 136,5 | 185,0 | 98,2 | 75,4 | OK | OK |
| Stirnblech1a | 50-w 1 | ◢ 6,0 ◣ | 229 | CO9(30) | 426,9 | 0,1 | -25,6 | -28,4 | -244,4 | 98,0 | 68,0 | OK | OK |
| | | ◢ 6,0 ◣ | 229 | CO9(30) | 426,9 | 0,1 | -70,5 | 67,5 | 233,6 | 98,0 | 63,7 | OK | OK |
| Stirnblech1b | 158-bfl 1 | ◢ 6,0 ◣ | 120 | CO9(30) | 427,3 | 0,3 | -123,9 | -144,6 | 186,6 | 98,1 | 71,0 | OK | OK |
| | | ◢ 6,0 ◣ | 119 | CO9(30) | 428,3 | 0,8 | -176,1 | 166,7 | -151,8 | 98,3 | 89,6 | OK | OK |
| Stirnblech1b | 158-tfl 1 | ◢ 6,0 ◣ | 119 | CO11(27) | 428,2 | 0,8 | -223,6 | -209,4 | -24,3 | 98,3 | 76,8 | OK | OK |
| | | ◢ 6,0 ◣ | 119 | CO11(27) | 427,4 | 0,3 | -168,1 | 178,5 | 140,1 | 98,1 | 64,2 | OK | OK |
| Stirnblech1b | 158-w 1 | ◢ 6,0 ◣ | 229 | CO9(30) | 361,7 | 0,0 | 17,7 | 25,6 | -207,0 | 83,0 | 56,1 | OK | OK |
| | | ◢ 6,0 ◣ | 229 | CO9(30) | 350,6 | 0,0 | 4,9 | 3,0 | 202,3 | 80,5 | 49,4 | OK | OK |
| 87-bfl 1 | Rippe1a | ◢ 6,0 ◣ | 118 | CO9(30) | 169,2 | 0,0 | 55,7 | 23,1 | 89,3 | 38,8 | 27,6 | OK | OK |
| | | ◢ 6,0 ◣ | 118 | CO9(30) | 118,1 | 0,0 | -43,2 | 10,5 | -62,6 | 27,1 | 19,0 | OK | OK |
| 87-w 1 | Rippe1a | ◢ 6,0 ◣ | 207 | CO9(30) | 332,7 | 0,0 | -179,9 | -128,3 | 98,3 | 76,4 | 57,4 | OK | OK |
| | | ◢ 6,0 ◣ | 207 | CO9(30) | 100,8 | 0,0 | 2,3 | -50,0 | 29,9 | 23,2 | 18,8 | OK | OK |
| 87-tfl 1 | Rippe1a | ◢ 6,0 ◣ | 118 | CO9(30) | 167,0 | 0,0 | 59,6 | 23,7 | -86,9 | 38,4 | 24,9 | OK | OK |
| | | ◢ 6,0 ◣ | 118 | CO9(30) | 121,0 | 0,0 | -53,2 | 17,3 | 60,3 | 27,8 | 17,5 | OK | OK |

| Position | Kante | $T_w$ [mm] | L [mm] | Lasten | $\sigma_{w,Ed}$ [MPa] | $\varepsilon_{Pl}$ [%] | $\sigma_{\perp}$ [MPa] | $\tau_{\perp}$ [MPa] | $\tau_{\parallel}$ [MPa] | Ut [%] | $Ut_c$ [%] | Konstruktionsregeln | Status |
|---|---|---|---|---|---|---|---|---|---|---|---|---|---|
| 87-bfl 1 | Rippe1b | ◢ 6,0 ◣ | 118 | CO9(30) | 104,8 | 0,0 | 48,0 | 16,8 | -51,1 | 24,1 | 17,7 | OK | OK |
| | | ◢ 6,0 ◣ | 118 | CO9(30) | 146,6 | 0,0 | -46,2 | 15,0 | 78,9 | 33,7 | 25,3 | OK | OK |
| 87-w 1 | Rippe1b | ◢ 6,0 ◣ | 207 | CO9(30) | 91,8 | 0,0 | -47,0 | -23,3 | 39,1 | 21,1 | 16,6 | OK | OK |
| | | ◢ 6,0 ◣ | 207 | CO9(30) | 320,7 | 0,0 | 172,1 | -125,3 | 93,3 | 73,6 | 54,7 | OK | OK |
| 87-tfl 1 | Rippe1b | ◢ 6,0 ◣ | 118 | CO9(30) | 112,5 | 0,0 | 44,8 | 14,6 | 57,8 | 25,8 | 16,4 | OK | OK |
| | | ◢ 6,0 ◣ | 118 | CO9(30) | 157,1 | 0,0 | -47,4 | 17,2 | -84,7 | 36,1 | 23,5 | OK | OK |
| 87-bfl 1 | Rippe1c | ◢ 6,0 ◣ | 118 | CO9(30) | 114,5 | 0,0 | 46,6 | 15,1 | -58,5 | 26,3 | 18,0 | OK | OK |
| | | ◢ 6,0 ◣ | 118 | CO9(30) | 155,4 | 0,0 | -52,8 | 21,4 | 81,6 | 35,7 | 25,2 | OK | OK |
| 87-w 1 | Rippe1c | ◢ 6,0 ◣ | 207 | CO9(30) | 104,6 | 0,0 | -4,6 | -54,7 | -25,5 | 24,0 | 19,8 | OK | OK |
| | | ◢ 6,0 ◣ | 207 | CO9(30) | 299,4 | 0,0 | 176,5 | -122,5 | 67,0 | 68,7 | 54,7 | OK | OK |
| 87-tfl 1 | Rippe1c | ◢ 6,0 ◣ | 118 | CO9(30) | 127,9 | 0,0 | 48,7 | 14,1 | 66,8 | 29,4 | 16,9 | OK | OK |
| | | ◢ 6,0 ◣ | 118 | CO9(30) | 173,5 | 0,0 | -60,4 | 25,8 | -90,3 | 39,8 | 23,7 | OK | OK |
| 87-bfl 1 | Rippe1d | ◢ 6,0 ◣ | 118 | CO9(30) | 158,5 | 0,0 | 49,7 | 20,9 | 84,4 | 36,4 | 25,1 | OK | OK |
| | | ◢ 6,0 ◣ | 118 | CO9(30) | 114,7 | 0,0 | -40,9 | 12,1 | -60,6 | 26,3 | 17,6 | OK | OK |
| 87-w 1 | Rippe1d | ◢ 6,0 ◣ | 207 | CO9(30) | 297,0 | 0,0 | -174,0 | -122,0 | 66,5 | 68,2 | 53,3 | OK | OK |
| | | ◢ 6,0 ◣ | 207 | CO9(30) | 99,3 | 0,0 | 67,1 | -30,7 | -29,1 | 22,8 | 17,7 | OK | OK |
| 87-tfl 1 | Rippe1d | ◢ 6,0 ◣ | 118 | CO9(30) | 156,5 | 0,0 | 50,7 | 18,9 | -83,4 | 35,9 | 22,7 | OK | OK |
| | | ◢ 6,0 ◣ | 118 | CO9(30) | 117,2 | 0,0 | -48,5 | 16,7 | 59,3 | 26,9 | 16,3 | OK | OK |

**Bemessungsdaten**

| Material | $f_u$ [MPa] | $\beta_w$ [-] | $\sigma_{w,Rd}$ [MPa] | 0.9 σ [MPa] |
|---|---|---|---|---|
| S 355 | 490,0 | 0,90 | 435,6 | 352,8 |

**Erläuterung von Symbolen**

| | |
|---|---|
| $T_w$ | Nahtdicke a |
| L | Länge |
| $\sigma_{w,Ed}$ | Vergleichsspannung |
| $\varepsilon_{Pl}$ | Dehnung |
| $\sigma_{\perp}$ | Senkrechte Spannung |
| $\tau_{\perp}$ | Scherspannung senkrecht zur Schweißnahtachse |
| $\tau_{\parallel}$ | Scherspannung parallel zur Schweißnahtachse |
| Ut | Ausnutzung |
| $Ut_c$ | Schätzung der Schweißnahtkapazität |
| ◢ | Kehlnaht |
| $f_u$ | Grenzfestigkeit der Schweißnaht |
| $\beta_w$ | Korrelationsfaktor nach EN 1993-1-8 Tab. 4.1 |
| $\sigma_{w,Rd}$ | Tragfähigkeit der Schweißnaht |
| 0.9 σ | Senkrechter Spannungswiderstand - 0.9*fu / γM2 |

## Beulen

**Die Beulanalyse wurde nicht berechnet.**

# Normeinstellungen

| Position | Wert | Einheit | Bezug |
|---|---|---|---|
| Sicherheitsfaktor $\gamma_{M0}$ | 1,00 | - | EN 1993-1-1 – 6.1 |
| Sicherheitsfaktor $\gamma_{M1}$ | 1,00 | - | EN 1993-1-1 – 6.1 |
| Sicherheitsfaktor $\gamma_{M2}$ | 1,25 | - | EN 1993-1-1 – 6.1 |
| Sicherheitsfaktor $\gamma_{M3}$ | 1,25 | - | EN 1993-1-8 – Table 2.1 |
| Sicherheitsfaktor $\gamma_{C}$ | 1,50 | - | EN 1992-1-1 – 2.4.2.4 |
| Sicherheitsfaktor $\gamma_{Inst}$ | 1,20 | - | EN 1992-4 – Table 4.1 |
| Verbindungskoeffizient βj | 0,67 | - | EN 1993-1-8 – 6.2.5(7) |
| Wirksame Fläche - Einfluss der Netzgröße | 0,10 | - | |
| Reibungsbeiwert - Beton | 0,25 | - | EN 1993-1-8 |
| Reibungskoeffizient bei gleitfesten Verbindungen | 0,30 | - | EN 1993-1-8 – Table 3.7 |
| Plastische Dehnung - Grenzwert | 0,05 | - | EN 1993-1-5 |
| Konstruktionsregeln | Ja | | |
| Distance between bolts [d0] | 2,20 | - | EN 1993-1-8 – Table 3.3 |
| Distance between bolts and edge [d0] | 1,20 | - | EN 1993-1-8 – Table 3.3 |
| Nachweis der Tragfähigkeit bei Betonausbruch | Beide | | |
| Berechnetes αb für Lochleibungsnachweis anwenden. | Ja | | EN 1993-1-8 – Table 3.4 |
| Gerissener Beton | Ja | | EN 1992-4 |
| Überprüfen der lokalen Verformung | Ja | | |
| Lokale Verformung - Grenzwert | 0,03 | - | CIDECT DG 1, 3 – 1.1 |
| Geometrische Nichtlinearität (GMNA) | Ja | | Analyse mit großen Verformungen für Verbindungen mit Hohlprofilen |
| Ausgesteiftes System | Nein | | EN 1993-1-8 – 5.2.2.5 |

| | |
|---|---|
| **Projekt:** | **IdeaStatiCa-Stadion_Fazanerija_JK-6_BR - 44** |
| **Projektnummer:** | **Detajl D10-O5** |
| **Autor:** | **mag. Igor Gorup dipl. ing.** |

## Projektdaten

| | |
|---|---|
| Projektname | IdeaStatiCa-Stadion_Fazanerija_JK-6_BR - 44 |
| Projektnummer | Detajl D10-O5 |
| Autor | mag. Igor Gorup dipl. ing. |
| Beschreibung | |
| Datum | 18.06.2025 |
| Norm | EN |

## Material

| | |
|---|---|
| Stahl | Baustahl S 355, Baustahl S 235, S 355 |

# Projektposition 44

## Bemessung

| | |
|---|---|
| Name | 44 |
| Beschreibung | |
| Berechnung | Spannung, Dehnung/ Lasten im Gleichgewicht |

### Bauteile

#### Geometrie

| Name | Querschnitt | β – Rotation [°] | Y - Rotation [°] | α - Rotation [°] | Abstand ex [mm] | Abstand ey [mm] | Abstand ez [mm] |
|---|---|---|---|---|---|---|---|
| 48 | 272 - IPE300 | 0,0 | 0,0 | -180,0 | 0 | 0 | 0 |
| 86 | 838 - I230 | 90,0 | 90,0 | 90,0 | 0 | 0 | 0 |
| 214 | 24 - IPE240 | 0,0 | 0,0 | -180,0 | 0 | 0 | -30 |

#### Auflager und Kräfte

| Name | Auflager | Kräfte in | X [mm] |
|---|---|---|---|
| 48 / anfang | | Position | 0 |
| 86 / anfang | N-Vy-Vz-Mx-My-Mz | Position | 0 |
| 86 / ende | | Position | 0 |
| 214 / ende | | Position | 0 |

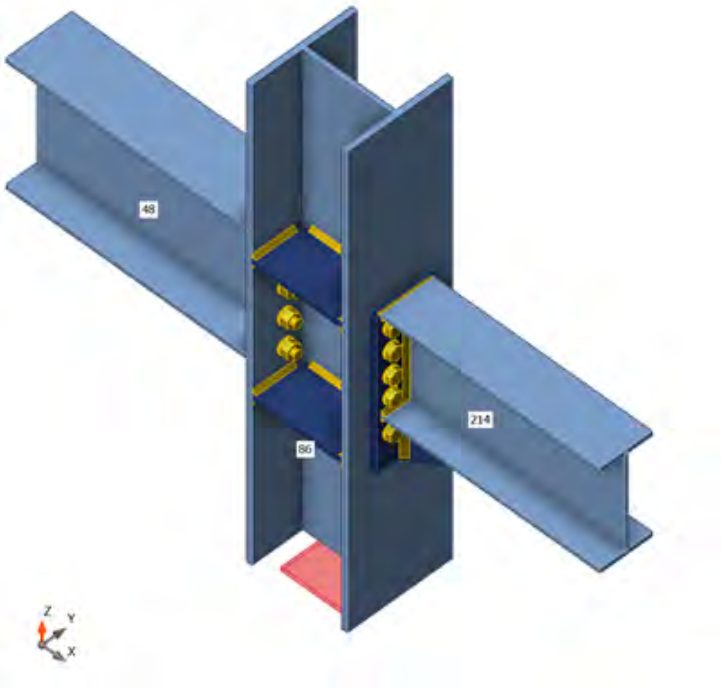


### Querschnitte

| Name | Material |
|---|---|
| 272 - IPE300 | Baustahl S 355 |
| 838 - I230 | Baustahl S 355 |
| 24 - IPE240 | Baustahl S 355 |

## Schrauben

| Name | Durchmesser [mm] | $f_y$ [MPa] | $f_u$ [MPa] | Bruttofläche [$mm^2$] |
|---|---|---|---|---|
| M20 8.8 | 20 | 640,0 | 800,0 | 314 |

## Lasteinwirkungen (Kräfte im Gleichgewicht)

| Name | Bauteil | N [kN] | Vy [kN] | Vz [kN] | Mx [kNm] | My [kNm] | Mz [kNm] |
|---|---|---|---|---|---|---|---|
| CO11(26) | 48 / Anfang | 11,2 | 1,5 | -2,4 | 0,1 | 89,1 | -1,4 |
| | 86 / Anfang | 137,5 | -8,6 | 1,1 | 0,1 | 5,7 | 10,1 |
| | 86 / Ende | -72,2 | 5,1 | 2,2 | -0,1 | -7,9 | -10,1 |
| | 214 / Ende | -14,5 | 2,0 | 67,7 | -0,1 | -86,9 | 1,3 |
| CO11(27) | 48 / Anfang | -9,3 | -1,5 | 7,6 | -0,1 | 42,4 | 0,9 |
| | 86 / Anfang | -169,4 | 6,2 | 7,1 | -0,1 | 14,5 | -6,4 |
| | 86 / Ende | 216,9 | -2,8 | -3,6 | 0,0 | 1,2 | 6,4 |
| | 214 / Ende | 5,8 | -1,9 | 39,8 | 0,0 | -58,1 | -1,0 |
| CO11(28) | 48 / Anfang | 8,7 | 2,8 | -72,1 | 0,1 | 54,3 | -1,4 |
| | 86 / Anfang | 181,4 | -7,3 | 10,3 | 0,2 | 25,4 | 9,1 |
| | 86 / Ende | -185,3 | 2,2 | -6,8 | 0,1 | 8,7 | -9,2 |
| | 214 / Ende | -12,2 | 2,3 | 68,2 | 0,0 | -88,5 | 1,6 |
| CO11(29) | 48 / Anfang | -5,8 | -3,7 | 89,9 | 0,0 | 122,3 | 1,7 |
| | 86 / Anfang | -219,9 | 5,3 | -2,9 | 0,0 | -6,1 | -6,0 |
| | 86 / Ende | 380,4 | 1,0 | 6,5 | 0,1 | -20,1 | 6,0 |
| | 214 / Ende | 2,2 | -2,5 | 70,6 | 0,0 | -96,1 | -1,6 |
| CO11(30) | 48 / Anfang | -3,0 | -0,8 | 32,1 | 0,0 | 102,9 | 0,8 |
| | 86 / Anfang | -194,9 | 3,6 | 5,7 | -0,1 | 12,0 | -2,7 |
| | 86 / Ende | 306,9 | -1,3 | -2,3 | 0,0 | -4,4 | 2,7 |
| | 214 / Ende | -0,4 | -1,5 | 79,9 | 0,0 | -110,5 | -0,9 |
| CO9(31) | 48 / Anfang | 13,9 | -2,9 | 116,9 | 0,0 | 58,8 | 0,7 |
| | 86 / Anfang | 102,0 | 3,1 | -27,4 | 0,0 | -59,2 | -5,1 |
| | 86 / Ende | 10,6 | 0,6 | 9,4 | 0,0 | -13,7 | 5,1 |
| | 214 / Ende | 3,9 | -0,7 | -4,3 | 0,0 | 14,0 | -0,7 |
| CO11(32) | 48 / Anfang | 8,3 | -0,1 | 65,3 | 0,1 | 114,8 | -0,6 |
| | 86 / Anfang | -92,0 | -5,6 | -2,9 | 0,0 | -4,9 | 7,0 |
| | 86 / Ende | 226,6 | 5,0 | 6,0 | -0,1 | -17,7 | -7,1 |
| | 214 / Ende | -11,4 | 0,7 | 69,3 | -0,1 | -92,2 | 0,4 |
| CO11(33) | 48 / Anfang | -7,8 | -1,5 | 11,7 | -0,1 | 84,0 | 1,2 |
| | 86 / Anfang | -153,5 | 6,3 | 7,3 | -0,1 | 15,6 | -6,5 |
| | 86 / Ende | 236,5 | -2,5 | -3,7 | 0,0 | -1,2 | 6,5 |
| | 214 / Ende | 4,1 | -2,3 | 71,3 | 0,0 | -98,4 | -1,3 |
| CO11(34) | 48 / Anfang | 8,3 | 1,1 | -2,1 | 0,1 | 48,6 | -0,8 |
| | 86 / Anfang | 93,1 | -7,8 | 1,0 | 0,0 | 4,5 | 8,9 |
| | 86 / Ende | -58,9 | 5,1 | 2,4 | -0,1 | -6,4 | -8,9 |
| | 214 / Ende | -11,7 | 1,6 | 36,2 | -0,1 | -46,7 | 0,8 |
| CO11(35) | 48 / Anfang | 8,6 | 1,5 | -7,2 | 0,1 | 47,1 | -0,9 |
| | 86 / Anfang | 118,1 | -8,0 | 1,3 | 0,1 | 5,3 | 9,2 |
| | 86 / Ende | -89,0 | 4,8 | 2,2 | -0,1 | -5,4 | -9,2 |
| | 214 / Ende | -12,1 | 1,7 | 36,3 | -0,1 | -46,9 | 0,9 |
| CO11(36) | 48 / Anfang | -8,4 | -2,2 | 41,9 | -0,1 | 94,8 | 1,5 |
| | 86 / Anfang | -283,0 | 6,3 | 6,9 | -0,1 | 13,5 | -6,0 |
| | 86 / Ende | 397,7 | -1,6 | -2,1 | 0,0 | -5,4 | 6,0 |
| | 214 / Ende | 3,7 | -2,4 | 72,7 | 0,0 | -102,9 | -1,5 |
| CO11(37) | 48 / Anfang | -4,5 | -0,7 | 58,8 | 0,0 | 78,6 | 0,7 |
| | 86 / Anfang | -329,6 | 3,3 | 5,4 | -0,1 | 10,1 | -1,5 |
| | 86 / Ende | 443,6 | -1,3 | -0,7 | 0,0 | -6,0 | 1,5 |

| Name | Bauteil | N [kN] | Vy [kN] | Vz [kN] | Mx [kNm] | My [kNm] | Mz [kNm] |
|---|---|---|---|---|---|---|---|
| | 214 / Ende | -0,1 | -1,3 | 55,1 | 0,0 | -82,6 | -0,7 |
| CO11(38) | 48 / Anfang | -9,5 | -1,7 | 32,8 | 0,0 | 51,6 | 1,0 |
| | 86 / Anfang | -273,9 | 6,1 | 6,8 | -0,1 | 13,2 | -5,5 |
| | 86 / Ende | 348,0 | -2,4 | -2,4 | 0,0 | -1,9 | 5,6 |
| | 214 / Ende | 5,0 | -2,0 | 41,3 | 0,0 | -62,9 | -1,0 |
| CO11(39) | 48 / Anfang | 10,8 | 1,1 | 2,7 | 0,1 | 90,7 | -1,2 |
| | 86 / Anfang | 112,4 | -8,4 | 0,9 | 0,1 | 4,9 | 9,7 |
| | 86 / Ende | -42,1 | 5,4 | 2,4 | -0,1 | -8,9 | -9,8 |
| | 214 / Ende | -14,1 | 1,9 | 67,6 | -0,1 | -86,6 | 1,2 |
| CO11(15) | 48 / Anfang | 10,0 | 1,6 | -35,9 | 0,1 | 59,8 | -1,2 |
| | 86 / Anfang | 239,2 | -8,1 | 2,0 | 0,1 | 7,9 | 8,7 |
| | 86 / Ende | -221,7 | 4,5 | 0,3 | 0,0 | -2,4 | -8,8 |
| | 214 / Ende | -12,3 | 2,0 | 53,4 | -0,1 | -65,3 | 1,2 |
| CO11(16) | 48 / Anfang | -5,3 | -1,6 | 68,9 | 0,0 | 81,7 | 0,9 |
| | 86 / Anfang | -379,7 | 3,5 | 4,9 | -0,1 | 8,5 | -2,1 |
| | 86 / Ende | 503,5 | -0,4 | -0,3 | 0,0 | -8,0 | 2,1 |
| | 214 / Ende | 0,7 | -1,5 | 54,9 | 0,0 | -82,1 | -0,9 |
| CO11(18) | 48 / Anfang | -9,2 | -2,1 | 43,1 | -0,1 | 71,3 | 1,2 |
| | 86 / Anfang | -304,1 | 6,1 | 6,8 | -0,1 | 13,0 | -5,7 |
| | 86 / Ende | 401,4 | -1,8 | -2,0 | 0,0 | -4,3 | 5,7 |
| | 214 / Ende | 4,4 | -2,2 | 54,3 | 0,0 | -80,0 | -1,3 |
| CO11(21) | 48 / Anfang | -8,5 | -1,6 | 6,4 | -0,1 | 65,8 | 1,1 |
| | 86 / Anfang | -148,6 | 6,3 | 7,2 | -0,1 | 15,0 | -6,6 |
| | 86 / Ende | 213,2 | -2,6 | -3,8 | 0,0 | 0,2 | 6,7 |
| | 214 / Ende | 5,2 | -2,1 | 58,3 | 0,0 | -81,0 | -1,2 |
| CO11(25) | 48 / Anfang | -6,1 | -3,0 | 51,1 | 0,0 | 91,4 | 1,4 |
| | 86 / Anfang | -89,7 | 5,3 | -1,8 | 0,0 | -3,2 | -6,6 |
| | 86 / Ende | 197,1 | -0,1 | 4,2 | 0,1 | -13,6 | 6,7 |
| | 214 / Ende | 3,7 | -2,3 | 56,3 | 0,0 | -74,6 | -1,3 |
| CO11(2) | 48 / Anfang | -9,9 | -2,2 | 37,8 | 0,0 | 53,1 | 1,1 |
| | 86 / Anfang | -298,9 | 6,2 | 6,6 | -0,1 | 12,4 | -5,8 |
| | 86 / Ende | 378,0 | -1,9 | -2,1 | 0,0 | -2,9 | 5,8 |
| | 214 / Ende | 5,4 | -2,1 | 41,2 | 0,0 | -62,6 | -1,2 |
| CO11(3) | 48 / Anfang | 7,5 | 2,8 | -70,4 | 0,1 | 31,1 | -1,2 |
| | 86 / Anfang | 160,0 | -7,1 | 10,2 | 0,2 | 24,8 | 8,9 |
| | 86 / Ende | -180,7 | 2,1 | -6,5 | 0,1 | 9,7 | -8,9 |
| | 214 / Ende | -11,2 | 2,2 | 49,7 | 0,0 | -65,6 | 1,4 |
| CO11(4) | 48 / Anfang | 7,7 | 2,7 | -77,1 | 0,1 | 36,2 | -1,2 |
| | 86 / Anfang | 185,1 | -7,0 | 10,2 | 0,2 | 24,9 | 8,6 |
| | 86 / Ende | -207,1 | 2,0 | -6,9 | 0,1 | 10,1 | -8,6 |
| | 214 / Ende | -11,0 | 2,2 | 55,2 | 0,0 | -71,2 | 1,5 |
| CO11(5) | 48 / Anfang | -2,8 | -3,1 | 118,1 | 0,1 | 109,9 | 1,2 |
| | 86 / Anfang | -314,8 | 2,6 | -5,1 | 0,0 | -11,4 | -2,2 |
| | 86 / Ende | 485,7 | 2,3 | 8,8 | 0,1 | -23,4 | 2,1 |
| | 214 / Ende | -0,9 | -1,7 | 52,7 | 0,0 | -75,1 | -1,1 |
| CO11(8) | 48 / Anfang | 9,8 | 0,9 | -1,1 | 0,1 | 100,0 | -0,9 |
| | 86 / Anfang | 166,1 | -5,7 | -0,7 | 0,0 | 1,7 | 6,2 |
| | 86 / Ende | -92,6 | 3,6 | 1,9 | -0,1 | -8,0 | -6,3 |

| Name | Bauteil | N [kN] | Vy [kN] | Vz [kN] | Mx [kNm] | My [kNm] | Mz [kNm] |
|---|---|---|---|---|---|---|---|
| | 214 / Ende | -11,0 | 1,2 | 74,7 | -0,1 | -93,7 | 0,9 |
| CO11(9) | 48 / Anfang | -8,1 | -1,7 | 36,9 | -0,1 | 93,2 | 1,3 |
| | 86 / Anfang | -258,0 | 6,1 | 7,1 | -0,1 | 14,3 | -5,7 |
| | 86 / Ende | 367,7 | -2,1 | -2,3 | 0,0 | -4,4 | 5,7 |
| | 214 / Ende | 3,3 | -2,3 | 72,8 | 0,0 | -103,2 | -1,4 |
| CO11(10) | 48 / Anfang | -6,6 | -3,7 | 83,5 | 0,0 | 103,5 | 1,6 |
| | 86 / Anfang | -216,2 | 5,3 | -2,8 | 0,0 | -6,1 | -6,1 |
| | 86 / Ende | 357,4 | 0,8 | 6,2 | 0,1 | -18,5 | 6,2 |
| | 214 / Ende | 3,3 | -2,4 | 57,6 | 0,0 | -78,9 | -1,5 |
| CO11(12) | 48 / Anfang | -1,7 | -3,2 | 117,7 | 0,1 | 133,7 | 1,3 |
| | 86 / Anfang | -292,9 | 2,6 | -5,3 | 0,0 | -11,3 | -2,3 |
| | 86 / Ende | 481,7 | 2,5 | 8,6 | 0,1 | -24,4 | 2,3 |
| | 214 / Ende | -1,7 | -1,8 | 71,2 | -0,1 | -98,0 | -1,2 |
| CO11(14) | 48 / Anfang | 11,2 | 1,7 | -30,0 | 0,1 | 78,4 | -1,4 |
| | 86 / Anfang | 236,5 | -8,5 | 1,9 | 0,1 | 8,1 | 9,3 |
| | 86 / Ende | -200,2 | 4,7 | 0,5 | -0,1 | -3,9 | -9,3 |
| | 214 / Ende | -13,6 | 2,1 | 66,3 | -0,1 | -82,5 | 1,4 |

## Fehlende Lasten

| Name | X [kN] | Y [kN] | Z [kN] | Mx [kNm] | My [kNm] | Mz [kNm] |
|---|---|---|---|---|---|---|
| CO11(26) | 0,0 | 0,0 | 0,0 | 0,1 | -0,4 | 0,0 |
| CO11(27) | 0,0 | 0,0 | 0,0 | -0,1 | 0,2 | 0,0 |
| CO11(28) | 0,0 | 0,0 | 0,0 | 0,1 | -0,4 | 0,0 |
| CO11(29) | 0,0 | 0,0 | 0,0 | -0,1 | 0,1 | 0,0 |
| CO11(30) | 0,0 | 0,0 | 0,0 | 0,0 | 0,0 | 0,0 |
| CO9(31) | -0,3 | -0,1 | 0,0 | 0,0 | 0,1 | 0,0 |
| CO11(32) | 0,0 | 0,0 | 0,0 | 0,0 | -0,3 | 0,0 |
| CO11(33) | 0,0 | 0,0 | 0,0 | -0,1 | 0,1 | 0,0 |
| CO11(34) | 0,0 | 0,0 | 0,0 | 0,0 | -0,4 | 0,0 |
| CO11(35) | 0,0 | 0,0 | 0,0 | 0,1 | -0,4 | 0,0 |
| CO11(36) | 0,0 | 0,0 | 0,0 | -0,1 | 0,1 | 0,0 |
| CO11(37) | 0,0 | 0,0 | 0,0 | 0,0 | 0,0 | 0,0 |
| CO11(38) | 0,0 | 0,0 | 0,0 | -0,1 | 0,2 | 0,0 |
| CO11(39) | 0,0 | 0,0 | 0,0 | 0,1 | -0,4 | 0,0 |
| CO11(15) | 0,0 | 0,0 | 0,0 | 0,1 | -0,4 | 0,0 |
| CO11(16) | 0,0 | 0,0 | 0,0 | 0,0 | 0,0 | 0,0 |
| CO11(18) | 0,0 | 0,0 | 0,0 | -0,1 | 0,1 | 0,0 |
| CO11(21) | 0,0 | 0,0 | 0,0 | -0,1 | 0,2 | 0,0 |
| CO11(25) | 0,0 | 0,0 | 0,0 | -0,1 | 0,1 | 0,0 |
| CO11(2) | 0,0 | 0,0 | 0,0 | -0,1 | 0,2 | 0,0 |
| CO11(3) | 0,0 | 0,0 | 0,0 | 0,1 | -0,3 | 0,0 |
| CO11(4) | 0,0 | 0,0 | 0,0 | 0,1 | -0,3 | 0,0 |
| CO11(5) | -0,1 | 0,0 | 0,0 | -0,1 | 0,0 | 0,0 |
| CO11(8) | 0,1 | 0,0 | 0,0 | 0,0 | -0,3 | 0,0 |
| CO11(9) | 0,0 | 0,0 | 0,0 | -0,1 | 0,1 | 0,0 |
| CO11(10) | 0,0 | 0,0 | 0,0 | -0,1 | 0,1 | 0,0 |
| CO11(12) | -0,1 | 0,0 | 0,0 | -0,1 | 0,0 | 0,0 |
| CO11(14) | 0,0 | 0,0 | 0,0 | 0,1 | -0,4 | 0,0 |

# Nachweis

## Übersicht

| Name | Wert | Nachweisstatus |
|---|---|---|
| Berechnung | 100,0% | OK |
| Platten | 0,5 < 5,0% | OK |
| Schrauben | 92,4 < 100% | OK |
| Schweißnähte | 98,4 < 100% | OK |
| Beulen | Nicht berechnet | |

## Platten

| Name | Material | $t_p$ [mm] | Lasten | $\sigma_{Ed}$ [MPa] | $\varepsilon_{Pl}$ [%] | $\sigma_{c,Ed}$ [MPa] | Status |
|---|---|---|---|---|---|---|---|
| 48-bfl 1 | Baustahl S 355 | 10,7 | CO11(12) | 329,1 | 0,0 | 0,0 | OK |
| 48-tfl 1 | Baustahl S 355 | 10,7 | CO11(12) | 275,5 | 0,0 | 0,0 | OK |
| 48-w 1 | Baustahl S 355 | 7,1 | CO11(12) | 321,1 | 0,0 | 0,0 | OK |
| 86-bfl 1 | Baustahl S 355 | 12,0 | CO11(12) | 356,0 | 0,5 | 118,2 | OK |
| 86-tfl 1 | Baustahl S 355 | 12,0 | CO11(30) | 355,7 | 0,3 | 91,8 | OK |
| 86-w 1 | Baustahl S 355 | 7,5 | CO11(12) | 350,7 | 0,0 | 0,0 | OK |
| 214-bfl 1 | Baustahl S 355 | 9,8 | CO11(30) | 355,5 | 0,2 | 0,0 | OK |
| 214-tfl 1 | Baustahl S 355 | 9,8 | CO11(30) | 355,2 | 0,1 | 0,0 | OK |
| 214-w 1 | Baustahl S 355 | 6,2 | CO11(30) | 355,7 | 0,3 | 0,0 | OK |
| Stirnblech1 | S 355 | 20,0 | CO11(12) | 355,2 | 0,1 | 213,4 | OK |
| Verstärkung1 | S 355 | 15,0 | CO11(12) | 355,6 | 0,3 | 0,0 | OK |
| Stirnblech2 | S 355 | 18,0 | CO11(30) | 355,6 | 0,3 | 186,3 | OK |
| Verstärkung2 | S 355 | 15,0 | CO11(30) | 356,0 | 0,5 | 0,0 | OK |
| Rippe1a | S 355 | 15,0 | CO11(12) | 173,7 | 0,0 | 0,0 | OK |
| Rippe1b | S 355 | 15,0 | CO11(12) | 177,1 | 0,0 | 0,0 | OK |
| Rippe1c | S 355 | 15,0 | CO11(12) | 355,1 | 0,0 | 0,0 | OK |
| Rippe1d | S 355 | 15,0 | CO11(12) | 355,0 | 0,0 | 0,0 | OK |

### Bemessungsdaten

| Material | $f_y$ [MPa] | $\varepsilon_{lim}$ [%] |
|---|---|---|
| Baustahl S 355 | 355,0 | 5,0 |
| S 355 | 355,0 | 5,0 |

### Erläuterung von Symbolen

| | |
|---|---|
| $t_p$ | Plattendicke |
| $\sigma_{Ed}$ | Vergleichsspannung |
| $\varepsilon_{Pl}$ | Plastische Dehnung |
| $\sigma_{c,Ed}$ | Kontaktspannung |
| $f_y$ | Streckgrenze |
| $\varepsilon_{lim}$ | Grenzwert plastische Dehnung |

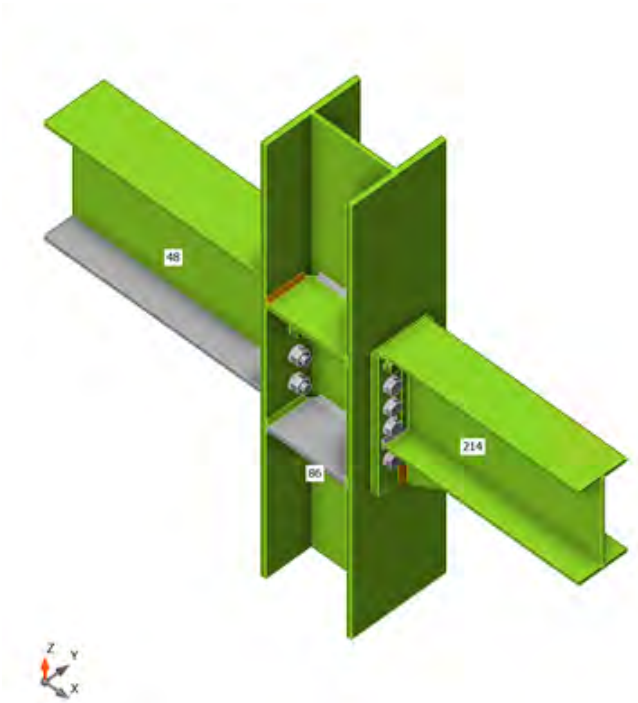


*Gesamt, CO11(12)*

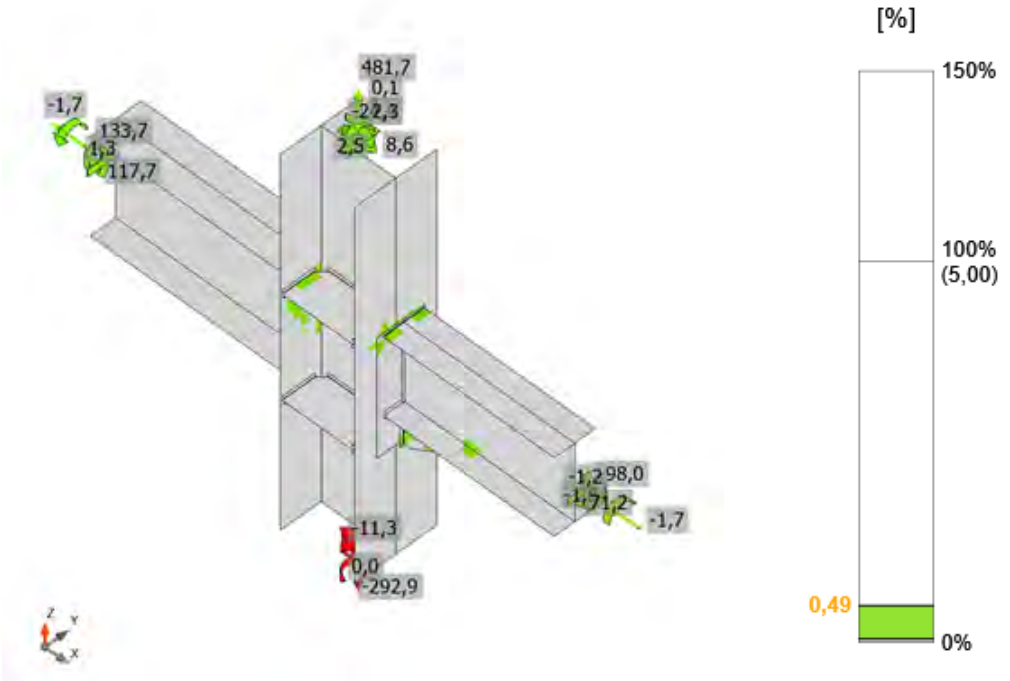


*Dehnung, CO11(12)*

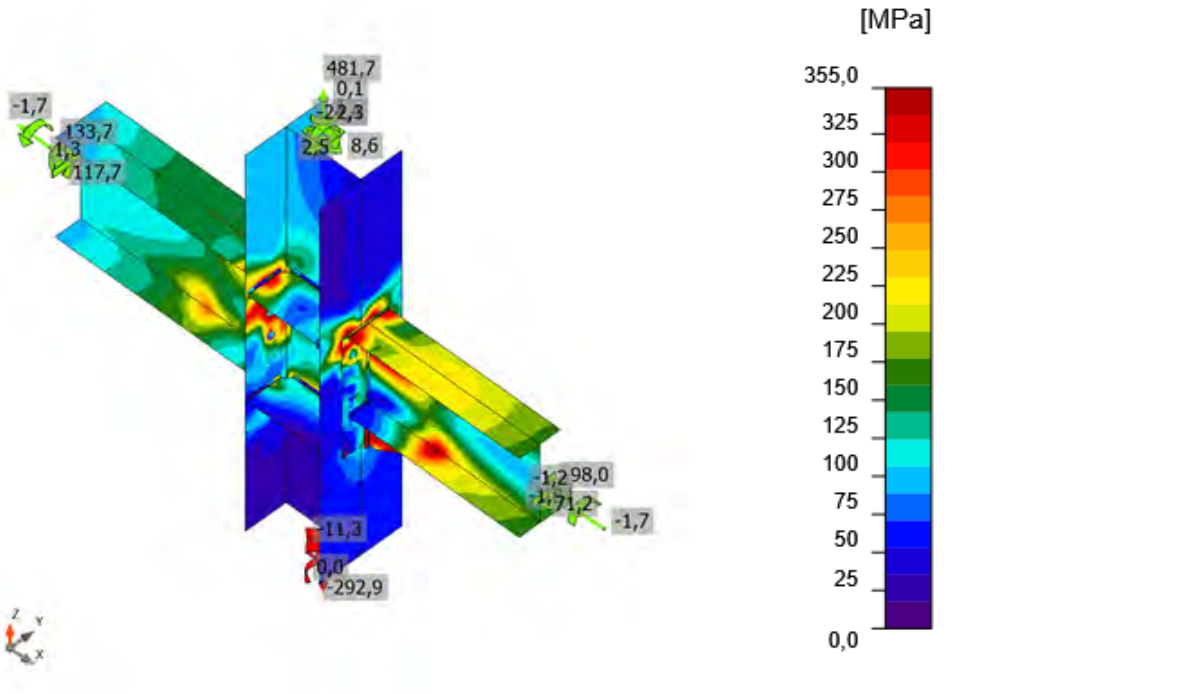


*Vergleichsspannung, CO11(12)*

## Schrauben

| Form | Position | Klasse | Lasten | $F_{t,Ed}$ [kN] | $F_{v,Ed}$ [kN] | $F_{b,Rd}$ [kN] | $Ut_t$ [%] | $Ut_s$ [%] | $Ut_{ts}$ [%] | Konstruktionsregeln | Status |
|---|---|---|---|---|---|---|---|---|---|---|---|
| 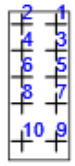 | B1 | M20 8.8 - 1 | CO11(12) | 130,4 | 9,0 | 190,7 | 92,4 | 9,6 | 75,6 | OK | OK |
| | B2 | M20 8.8 - 1 | CO11(12) | 129,2 | 9,6 | 190,7 | 91,6 | 10,2 | 75,6 | OK | OK |
| | B3 | M20 8.8 - 1 | CO11(12) | 98,7 | 13,3 | 190,7 | 69,9 | 14,1 | 64,0 | OK | OK |
| | B4 | M20 8.8 - 1 | CO11(12) | 97,2 | 13,7 | 190,7 | 68,9 | 14,6 | 63,8 | OK | OK |
| | B5 | M20 8.8 - 1 | CO11(12) | 54,6 | 11,9 | 190,7 | 38,7 | 12,7 | 40,4 | OK | OK |
| | B6 | M20 8.8 - 1 | CO11(12) | 55,1 | 12,2 | 190,7 | 39,1 | 12,9 | 40,8 | OK | OK |
| | B7 | M20 8.8 - 1 | CO11(12) | 15,7 | 11,9 | 235,2 | 11,1 | 12,7 | 20,6 | OK | OK |
| | B8 | M20 8.8 - 1 | CO11(12) | 16,0 | 12,0 | 235,2 | 11,3 | 12,7 | 20,8 | OK | OK |
| | B9 | M20 8.8 - 1 | CO9(31) | 1,8 | 16,2 | 235,2 | 1,3 | 17,3 | 18,2 | OK | OK |
| | B10 | M20 8.8 - 1 | CO9(31) | 2,1 | 15,6 | 235,2 | 1,5 | 16,6 | 17,6 | OK | OK |
| | B11 | M20 8.8 - 1 | CO11(30) | 16,9 | 8,4 | 151,7 | 11,9 | 8,9 | 17,5 | OK | OK |
| | B12 | M20 8.8 - 1 | CO11(30) | 16,9 | 8,5 | 151,7 | 12,0 | 9,0 | 17,6 | OK | OK |
| | B13 | M20 8.8 - 1 | CO9(31) | 25,1 | 2,0 | 226,3 | 17,8 | 2,1 | 14,8 | OK | OK |
| | B14 | M20 8.8 - 1 | CO9(31) | 22,4 | 2,2 | 235,2 | 15,9 | 2,4 | 13,7 | OK | OK |
| | B15 | M20 8.8 - 1 | CO11(30) | 126,0 | 3,8 | 137,2 | 89,3 | 4,1 | 67,9 | OK | OK |
| | B16 | M20 8.8 - 1 | CO11(30) | 125,1 | 4,2 | 137,2 | 88,6 | 4,4 | 67,7 | OK | OK |
| | B17 | M20 8.8 - 1 | CO11(30) | 87,1 | 6,6 | 137,2 | 61,7 | 7,0 | 51,1 | OK | OK |
| | B18 | M20 8.8 - 1 | CO11(30) | 86,8 | 6,8 | 137,2 | 61,5 | 7,3 | 51,2 | OK | OK |
| | B19 | M20 8.8 - 1 | CO11(30) | 47,8 | 7,2 | 119,4 | 33,8 | 7,7 | 31,9 | OK | OK |
| | B20 | M20 8.8 - 1 | CO11(30) | 47,6 | 7,3 | 119,4 | 33,8 | 7,8 | 31,9 | OK | OK |

**Bemessungsdaten**

| Klasse | $F_{t,Rd}$ [kN] | $B_{p,Rd}$ [kN] | $F_{v,Rd}$ [kN] |
|---|---|---|---|
| M20 8.8 - 1 | 141,1 | 281,7 | 94,1 |

**Erläuterung von Symbolen**

| | |
|---|---|
| $F_{t,Ed}$ | Zugkraft |
| $F_{v,Ed}$ | Resultierende der Schraubenscherkräfte Vy und Vz in Scherebenen |
| $F_{b,Rd}$ | Lochleibungstragfähigkeit der Platte nach EN 1993-1-8 Tab. 3.4 |
| $Ut_t$ | Ausnutzung unter Zug |
| $Ut_s$ | Ausnutzung unter Schub |
| $Ut_{ts}$ | Interaktion von Zug und Schub EN_1993-1-8 Tabelle 3.4 |
| $F_{t,Rd}$ | Zugtragfähigkeit der Schraube nach EN 1993-1-8 Tabelle 3.4 |
| $B_{p,Rd}$ | Durchstanztragfähigkeit nach EN 1993-1-8 Tabelle 3.4 |
| $F_{v,Rd}$ | Schertragfähigkeit der Schraube nach EN 1993-1-8 Tabelle 3.4 |

## Schweißnähte

| Position | Kante | $T_w$ [mm] | L [mm] | Lasten | $\sigma_{w,Ed}$ [MPa] | $\varepsilon_{Pl}$ [%] | $\sigma_{\perp}$ [MPa] | $\tau_{\perp}$ [MPa] | $\tau_{\parallel}$ [MPa] | Ut [%] | $Ut_c$ [%] | Konstruktionsregeln | Status |
|---|---|---|---|---|---|---|---|---|---|---|---|---|---|
| Stirnblech1 | 48-bfl 1 | ◢ 6,0 ◣ | 150 | CO11(12) | 249,8 | 0,0 | 147,7 | 76,1 | -88,0 | 57,3 | 45,8 | OK | OK |
| | | ◢ 6,0 ◣ | 150 | CO11(29) | 158,8 | 0,0 | 43,5 | 29,9 | -83,0 | 36,5 | 30,8 | OK | OK |
| Stirnblech1 | 48-tfl 1 | ◢ 6,0 ◣ | 150 | CO11(12) | 232,2 | 0,0 | -108,4 | -89,2 | -78,1 | 53,3 | 42,7 | OK | OK |
| | | ◢ 6,0 ◣ | 150 | CO11(30) | 173,5 | 0,0 | -68,8 | 84,4 | 36,6 | 39,8 | 30,6 | OK | OK |
| Stirnblech1 | 48-w 1 | ◢ 6,0 ◣ | 286 | CO11(12) | 272,0 | 0,0 | 136,5 | 135,8 | 1,5 | 62,5 | 39,8 | OK | OK |
| | | ◢ 6,0 ◣ | 286 | CO11(12) | 271,4 | 0,0 | 135,0 | -135,8 | 5,4 | 62,3 | 39,8 | OK | OK |
| Stirnblech1 | Verstärkung1 | ◢ 8,0 ◣ | 100 | CO11(12) | 428,0 | 0,6 | -200,1 | -200,0 | 87,7 | 98,3 | 75,4 | OK | OK |
| | | ◢ 8,0 ◣ | 100 | CO11(12) | 427,9 | 0,6 | -199,6 | 199,6 | -89,0 | 98,2 | 74,5 | OK | OK |
| 48-tfl 1 | Verstärkung1 | ◢ 8,0 ◣ | 199 | CO11(12) | 416,2 | 0,0 | -117,8 | -117,3 | -198,4 | 95,5 | 61,2 | OK | OK |
| | | ◢ 8,0 ◣ | 199 | CO11(12) | 415,2 | 0,0 | -117,2 | 117,6 | 197,6 | 95,3 | 61,3 | OK | OK |
| Stirnblech2 | 214-bfl 1 | ◢ 6,0 ◣ | 120 | CO11(30) | 299,7 | 0,0 | 167,8 | 69,8 | 125,2 | 68,8 | 56,6 | OK | OK |
| | | ◢ 6,0 ◣ | 120 | CO11(30) | 219,5 | 0,0 | -3,0 | 58,3 | 112,5 | 50,4 | 40,8 | OK | OK |
| Stirnblech2 | 214-tfl 1 | ◢ 6,0 ◣ | 120 | CO11(36) | 167,8 | 0,0 | -79,1 | -50,9 | 68,6 | 38,5 | 21,9 | OK | OK |
| | | ◢ 6,0 ◣ | 120 | CO11(36) | 112,8 | 0,0 | -15,9 | 29,0 | 57,5 | 25,9 | 17,2 | OK | OK |
| Stirnblech2 | 214-w 1 | ◢ 6,0 ◣ | 226 | CO11(36) | 389,0 | 0,0 | 137,4 | 145,0 | -152,1 | 89,3 | 48,0 | OK | OK |
| | | ◢ 6,0 ◣ | 226 | CO11(30) | 380,9 | 0,0 | 151,5 | -144,8 | 140,5 | 87,4 | 47,3 | OK | OK |
| Stirnblech2 | Verstärkung2 | ◢ 8,0 ◣ | 119 | CO11(30) | 428,7 | 1,1 | -204,7 | -204,7 | 73,3 | 98,4 | 76,4 | OK | OK |
| | | ◢ 8,0 ◣ | 119 | CO11(30) | 428,8 | 1,1 | -205,5 | 205,6 | -70,4 | 98,4 | 78,2 | OK | OK |
| 214-tfl 1 | Verstärkung2 | ◢ 8,0 ◣ | 199 | CO11(30) | 427,1 | 0,1 | -141,6 | -141,9 | -184,3 | 98,0 | 62,2 | OK | OK |

| Position | Kante | $T_w$ [mm] | L [mm] | Lasten | $\sigma_{w,Ed}$ [MPa] | $\varepsilon_{Pl}$ [%] | $\sigma_{\perp}$ [MPa] | $\tau_{\perp}$ [MPa] | $\tau_{\parallel}$ [MPa] | Ut [%] | $Ut_c$ [%] | Konstruktionsregeln | Status |
|---|---|---|---|---|---|---|---|---|---|---|---|---|---|
| | | ◢ 8,0 ◣ | 199 | CO11(30) | 427,1 | 0,1 | -141,5 | 141,1 | 184,9 | 98,1 | 61,9 | OK | OK |
| 86-bfl 1 | Rippe1a | ◢ 6,0 ◣ | 95 | CO11(30) | 227,7 | 0,0 | -101,1 | -114,8 | -26,6 | 52,3 | 31,0 | OK | OK |
| | | ◢ 6,0 ◣ | 95 | CO11(12) | 355,6 | 0,0 | -195,6 | 168,3 | 32,8 | 81,7 | 48,4 | OK | OK |
| 86-w 1 | Rippe1a | ◢ 6,0 ◣ | 164 | CO11(12) | 222,2 | 0,0 | -5,6 | -14,8 | -127,4 | 51,0 | 33,9 | OK | OK |
| | | ◢ 6,0 ◣ | 164 | CO11(30) | 220,1 | 0,0 | -18,1 | 14,4 | 125,8 | 50,5 | 34,1 | OK | OK |
| 86-tfl 1 | Rippe1a | ◢ 6,0 ◣ | 95 | CO11(30) | 426,9 | 0,0 | -206,9 | -202,4 | 74,1 | 98,0 | 48,2 | OK | OK |
| | | ◢ 6,0 ◣ | 95 | CO11(30) | 426,9 | 0,0 | -200,9 | 205,2 | -72,0 | 98,0 | 48,4 | OK | OK |
| 86-bfl 1 | Rippe1b | ◢ 6,0 ◣ | 95 | CO11(12) | 377,4 | 0,0 | -208,1 | -179,6 | -28,6 | 86,7 | 51,3 | OK | OK |
| | | ◢ 6,0 ◣ | 95 | CO11(30) | 245,5 | 0,0 | -111,1 | 124,7 | 20,7 | 56,4 | 33,4 | OK | OK |
| 86-w 1 | Rippe1b | ◢ 6,0 ◣ | 164 | CO11(30) | 218,1 | 0,0 | -20,8 | -14,4 | -124,5 | 50,1 | 33,8 | OK | OK |
| | | ◢ 6,0 ◣ | 164 | CO11(12) | 218,9 | 0,0 | -1,6 | 13,9 | 125,6 | 50,3 | 33,9 | OK | OK |
| 86-tfl 1 | Rippe1b | ◢ 6,0 ◣ | 95 | CO11(30) | 426,9 | 0,0 | -202,8 | -203,5 | 75,0 | 98,0 | 48,4 | OK | OK |
| | | ◢ 6,0 ◣ | 95 | CO11(30) | 426,9 | 0,0 | -206,7 | 205,9 | -64,2 | 98,0 | 48,0 | OK | OK |
| 86-bfl 1 | Rippe1c | ◢ 6,0 ◣ | 95 | CO11(12) | 157,8 | 0,0 | -33,3 | 80,8 | 37,3 | 36,2 | 19,9 | OK | OK |
| | | ◢ 6,0 ◣ | 95 | CO11(12) | 426,9 | 0,0 | 193,7 | -195,2 | 100,6 | 98,0 | 60,7 | OK | OK |
| 86-w 1 | Rippe1c | ◢ 6,0 ◣ | 164 | CO11(8) | 96,5 | 0,0 | 67,9 | 37,3 | 13,1 | 22,2 | 16,8 | OK | OK |
| | | ◢ 6,0 ◣ | 164 | CO11(12) | 110,0 | 0,0 | -85,0 | 40,1 | 4,3 | 25,3 | 17,5 | OK | OK |
| 86-tfl 1 | Rippe1c | ◢ 6,0 ◣ | 95 | CO11(30) | 131,1 | 0,0 | -28,2 | 66,6 | -32,2 | 30,1 | 17,1 | OK | OK |
| | | ◢ 6,0 ◣ | 95 | CO11(30) | 423,7 | 0,0 | 221,3 | -198,0 | -65,6 | 97,3 | 50,5 | OK | OK |
| 86-bfl 1 | Rippe1d | ◢ 6,0 ◣ | 95 | CO11(12) | 426,9 | 0,0 | 194,2 | 191,4 | -107,4 | 98,0 | 60,3 | OK | OK |

| Position | Kante | $T_w$ [mm] | L [mm] | Lasten | $\sigma_{w,Ed}$ [MPa] | $\varepsilon_{Pl}$ [%] | $\sigma_{\perp}$ [MPa] | $\tau_{\perp}$ [MPa] | $\tau_{\parallel}$ [MPa] | Ut [%] | $Ut_c$ [%] | Konstruktionsregeln | Status |
|---|---|---|---|---|---|---|---|---|---|---|---|---|---|
| | | ◢ 6,0 ◣ | 95 | CO11(12) | 162,4 | 0,0 | -29,9 | -83,2 | -39,7 | 37,3 | 20,7 | OK | OK |
| 86-w 1 | Rippe1d | ◢ 6,0 ◣ | 164 | CO11(12) | 103,6 | 0,0 | -80,8 | -37,3 | -3,6 | 23,8 | 17,1 | OK | OK |
| | | ◢ 6,0 ◣ | 164 | CO11(8) | 100,0 | 0,0 | 71,1 | -37,3 | -15,9 | 22,9 | 17,5 | OK | OK |
| 86-tfl 1 | Rippe1d | ◢ 6,0 ◣ | 95 | CO11(30) | 412,6 | 0,0 | 218,7 | 191,5 | 64,1 | 94,7 | 49,0 | OK | OK |
| | | ◢ 6,0 ◣ | 95 | CO11(30) | 128,2 | 0,0 | -23,5 | -67,9 | 26,0 | 29,4 | 16,9 | OK | OK |

**Bemessungsdaten**

| Material | $f_u$ [MPa] | $\beta_w$ [-] | $\sigma_{w,Rd}$ [MPa] | 0.9 σ [MPa] |
|---|---|---|---|---|
| S 355 | 490,0 | 0,90 | 435,6 | 352,8 |

**Erläuterung von Symbolen**

| | |
|---|---|
| $T_w$ | Nahtdicke a |
| L | Länge |
| $\sigma_{w,Ed}$ | Vergleichsspannung |
| $\varepsilon_{Pl}$ | Dehnung |
| $\sigma_{\perp}$ | Senkrechte Spannung |
| $\tau_{\perp}$ | Scherspannung senkrecht zur Schweißnahtachse |
| $\tau_{\parallel}$ | Scherspannung parallel zur Schweißnahtachse |
| Ut | Ausnutzung |
| $Ut_c$ | Schätzung der Schweißnahtkapazität |
| ◢ | Kehlnaht |
| $f_u$ | Grenzfestigkeit der Schweißnaht |
| $\beta_w$ | Korrelationsfaktor nach EN 1993-1-8 Tab. 4.1 |
| $\sigma_{w,Rd}$ | Tragfähigkeit der Schweißnaht |
| 0.9 σ | Senkrechter Spannungswiderstand - 0.9*fu / γM2 |

## Beulen

**Die Beulanalyse wurde nicht berechnet.**

## Normeinstellungen

| Position | Wert | Einheit | Bezug |
|---|---|---|---|
| Sicherheitsfaktor $\gamma_{M0}$ | 1,00 | - | EN 1993-1-1 – 6.1 |
| Sicherheitsfaktor $\gamma_{M1}$ | 1,00 | - | EN 1993-1-1 – 6.1 |
| Sicherheitsfaktor $\gamma_{M2}$ | 1,25 | - | EN 1993-1-1 – 6.1 |
| Sicherheitsfaktor $\gamma_{M3}$ | 1,25 | - | EN 1993-1-8 – Table 2.1 |
| Sicherheitsfaktor $\gamma_{C}$ | 1,50 | - | EN 1992-1-1 – 2.4.2.4 |
| Sicherheitsfaktor $\gamma_{Inst}$ | 1,20 | - | EN 1992-4 – Table 4.1 |
| Verbindungskoeffizient βj | 0,67 | - | EN 1993-1-8 – 6.2.5(7) |
| Wirksame Fläche - Einfluss der Netzgröße | 0,10 | - | |
| Reibungsbeiwert - Beton | 0,25 | - | EN 1993-1-8 |
| Reibungskoeffizient bei gleitfesten Verbindungen | 0,30 | - | EN 1993-1-8 – Table 3.7 |
| Plastische Dehnung - Grenzwert | 0,05 | - | EN 1993-1-5 |
| Konstruktionsregeln | Ja | | |
| Distance between bolts [d0] | 2,20 | - | EN 1993-1-8 – Table 3.3 |
| Distance between bolts and edge [d0] | 1,20 | - | EN 1993-1-8 – Table 3.3 |
| Nachweis der Tragfähigkeit bei Betonausbruch | Beide | | |
| Berechnetes αb für Lochleibungsnachweis anwenden. | Ja | | EN 1993-1-8 – Table 3.4 |
| Gerissener Beton | Ja | | EN 1992-4 |
| Überprüfen der lokalen Verformung | Ja | | |
| Lokale Verformung - Grenzwert | 0,03 | - | CIDECT DG 1, 3 – 1.1 |
| Geometrische Nichtlinearität (GMNA) | Ja | | Analyse mit großen Verformungen für Verbindungen mit Hohlprofilen |
| Ausgesteiftes System | Nein | | EN 1993-1-8 – 5.2.2.5 |

# DETAJLI NA OKVIRJU O6 - Gj-1 do Gj-0

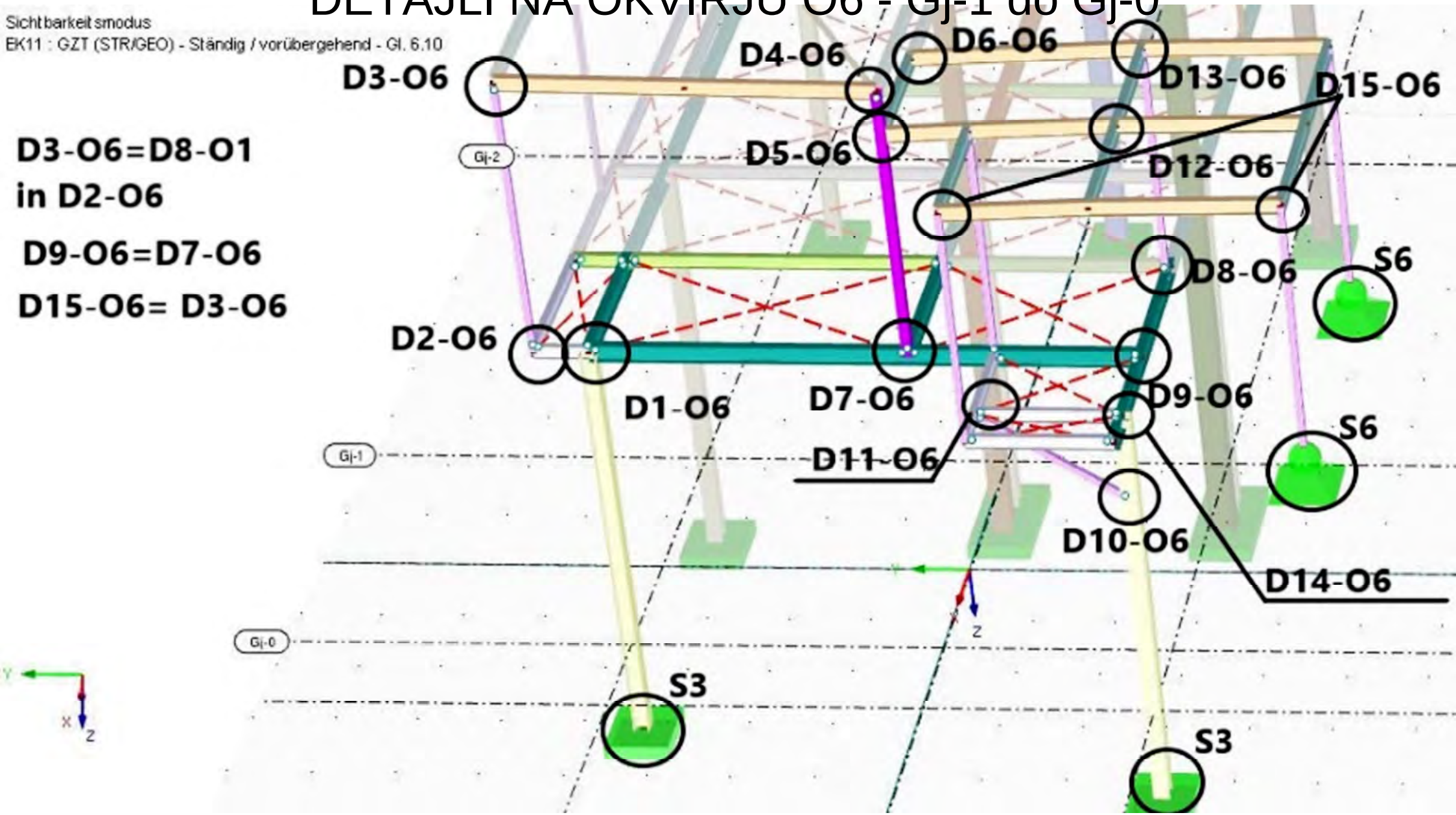

| | |
|---|---|
| **Projekt:** | **IdeaStatiCa-Stadion_Fazanerija_JK-6_BR - 974** |
| **Projektnummer:** | **Detajl D1-O6** |
| **Autor:** | **mag. Igor Gorup dipl. ing.** |

## Projektdaten

| | |
|---|---|
| Projektname | IdeaStatiCa-Stadion_Fazanerija_JK-6_BR - 974 |
| Projektnummer | Detajl D1-O6 |
| Autor | mag. Igor Gorup dipl. ing. |
| Beschreibung | |
| Datum | 18.06.2025 |
| Norm | EN |

## Material

| | |
|---|---|
| Stahl | Baustahl S 355, Baustahl S 235, S 355 |

# Projektposition 974

## Bemessung

| | |
|---|---|
| Name | 974 |
| Beschreibung | |
| Berechnung | Spannung, Dehnung/ Lasten im Gleichgewicht |

### Bauteile

#### Geometrie

| Name | Querschnitt | β – Rotation [°] | Y - Rotation [°] | α - Rotation [°] | Abstand ex [mm] | Abstand ey [mm] | Abstand ez [mm] |
|---|---|---|---|---|---|---|---|
| 153 | 24 - IPE240 | 90,0 | 0,0 | -180,0 | 0 | 0 | 0 |
| 133 | 12 - HEA200 | 0,0 | 90,0 | -90,0 | 120 | 0 | 0 |
| 154 | 649 - IPE180 | 90,0 | 0,0 | -180,0 | 0 | 0 | -30 |
| 335 | 24 - IPE240 | 0,0 | 0,0 | -180,0 | 0 | 0 | 0 |

#### Auflager und Kräfte

| Name | Auflager | Kräfte in | X [mm] |
|---|---|---|---|
| 153 / ende | | Position | 0 |
| 133 / anfang | N-Vy-Vz-Mx-My-Mz | Position | 0 |
| 154 / anfang | | Position | 0 |
| 335 / anfang | | Position | 0 |

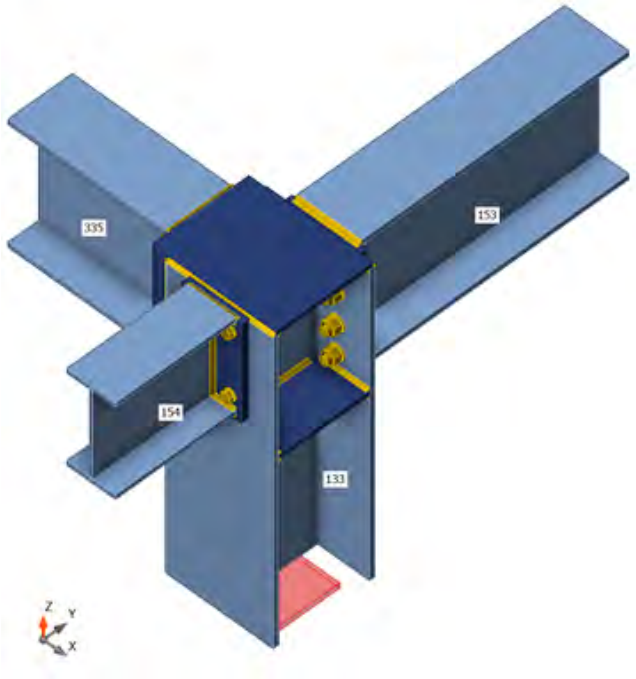


### Querschnitte

| Name | Material |
|---|---|
| 24 - IPE240 | Baustahl S 355 |
| 12 - HEA200 | Baustahl S 355 |
| 649 - IPE180 | S 355 |

## Schrauben

| Name | Durchmesser [mm] | $f_y$ [MPa] | $f_u$ [MPa] | Bruttofläche [$mm^2$] |
|---|---|---|---|---|
| M16 8.8 | 16 | 640,0 | 800,0 | 201 |
| M12 8.8 | 12 | 640,0 | 800,0 | 113 |

## Lasteinwirkungen (Kräfte im Gleichgewicht)

| Name | Bauteil | N [kN] | Vy [kN] | Vz [kN] | Mx [kNm] | My [kNm] | Mz [kNm] |
|---|---|---|---|---|---|---|---|
| CO11(37) | 153 / Ende | 1,6 | 0,1 | 32,1 | 0,0 | -13,4 | 0,2 |
| | 133 / Anfang | 61,4 | 0,5 | -4,0 | 0,0 | 2,0 | -0,7 |
| | 154 / Anfang | 1,7 | 0,9 | 20,5 | 0,0 | 11,3 | -0,2 |
| | 335 / Anfang | -2,3 | -0,1 | 8,8 | 0,1 | -0,8 | 0,0 |
| CO11(38) | 153 / Ende | 1,3 | 0,1 | 17,3 | 0,0 | -4,9 | 0,1 |
| | 133 / Anfang | 34,9 | -0,5 | -3,7 | 0,0 | -1,6 | 1,7 |
| | 154 / Anfang | 1,4 | 0,9 | 11,6 | 0,0 | 6,5 | -0,2 |
| | 335 / Anfang | -1,6 | -0,1 | 6,0 | 0,0 | 1,7 | 0,1 |
| CO11(39) | 153 / Ende | -2,4 | 0,1 | 51,5 | 0,0 | -72,9 | 0,1 |
| | 133 / Anfang | 78,6 | -0,4 | 21,8 | -0,1 | 63,9 | 1,7 |
| | 154 / Anfang | -0,5 | -0,2 | 16,9 | 0,0 | 9,0 | 0,0 |
| | 335 / Anfang | -0,7 | 0,1 | 10,2 | 0,1 | 1,7 | -0,1 |
| CO11(40) | 153 / Ende | -0,3 | 0,1 | 48,0 | 0,0 | -50,6 | 0,1 |
| | 133 / Anfang | 80,4 | -1,3 | 11,2 | 0,0 | 40,5 | 4,7 |
| | 154 / Anfang | 0,2 | 0,1 | 19,1 | 0,0 | 10,1 | -0,1 |
| | 335 / Anfang | -1,2 | 0,0 | 13,3 | 0,1 | 4,7 | -0,1 |
| CO11(41) | 153 / Ende | -1,2 | 0,1 | 49,2 | 0,0 | -57,8 | 0,1 |
| | 133 / Anfang | 78,6 | 0,4 | 14,6 | -0,1 | 47,5 | -0,4 |
| | 154 / Anfang | -0,1 | -0,1 | 19,2 | 0,0 | 10,3 | 0,0 |
| | 335 / Anfang | -1,1 | 0,1 | 10,1 | 0,1 | -0,4 | -0,1 |
| CO9(42) | 153 / Ende | 0,2 | -0,1 | 1,1 | 0,0 | 3,6 | -0,1 |
| | 133 / Anfang | 7,0 | -3,7 | -2,3 | 0,0 | -3,4 | 10,1 |
| | 154 / Anfang | 0,4 | -0,2 | -0,3 | 0,0 | -0,2 | 0,1 |
| | 335 / Anfang | -0,1 | 0,0 | 6,3 | 0,0 | 10,1 | 0,0 |
| CO11(43) | 153 / Ende | 1,6 | 0,1 | 23,6 | 0,0 | -3,8 | 0,2 |
| | 133 / Anfang | 44,3 | 0,6 | -5,5 | 0,0 | -3,7 | -1,2 |
| | 154 / Anfang | 1,6 | 0,9 | 14,0 | 0,0 | 7,5 | -0,2 |
| | 335 / Anfang | -2,0 | -0,1 | 6,8 | 0,0 | -1,2 | 0,0 |
| CO11(44) | 153 / Ende | 1,4 | 0,1 | 35,6 | 0,0 | -22,0 | 0,1 |
| | 133 / Anfang | 65,0 | -0,8 | -0,2 | 0,0 | 12,0 | 2,9 |
| | 154 / Anfang | 1,6 | 0,9 | 18,3 | 0,0 | 9,9 | -0,2 |
| | 335 / Anfang | -2,1 | -0,1 | 11,1 | 0,0 | 2,9 | 0,0 |
| CO11(45) | 153 / Ende | -2,0 | 0,1 | 47,6 | 0,0 | -63,6 | 0,1 |
| | 133 / Anfang | 72,5 | 0,8 | 18,3 | -0,1 | 54,7 | -1,7 |
| | 154 / Anfang | -0,4 | -0,2 | 16,7 | 0,0 | 8,9 | 0,0 |
| | 335 / Anfang | -0,8 | 0,1 | 8,1 | 0,1 | -1,7 | -0,1 |
| CO11(46) | 153 / Ende | -1,5 | 0,1 | 49,6 | 0,0 | -65,2 | 0,1 |
| | 133 / Anfang | 80,9 | -0,7 | 17,4 | 0,0 | 53,9 | 2,8 |
| | 154 / Anfang | -0,2 | -0,1 | 20,3 | 0,0 | 11,2 | 0,0 |
| | 335 / Anfang | -0,9 | 0,0 | 10,9 | 0,1 | 2,8 | -0,1 |
| CO11(47) | 153 / Ende | -1,9 | 0,1 | 28,9 | 0,0 | -45,0 | 0,1 |
| | 133 / Anfang | 42,0 | 1,1 | 14,3 | 0,0 | 39,5 | -2,7 |
| | 154 / Anfang | -0,5 | -0,2 | 10,0 | 0,0 | 5,4 | 0,0 |
| | 335 / Anfang | -0,3 | 0,1 | 3,2 | 0,0 | -2,8 | -0,1 |
| CO11(48) | 153 / Ende | 1,3 | 0,1 | 17,3 | 0,0 | -5,2 | 0,1 |
| | 133 / Anfang | 35,3 | -0,5 | -3,5 | 0,0 | -1,6 | 1,7 |
| | 154 / Anfang | 1,5 | 0,9 | 12,0 | 0,0 | 6,8 | -0,1 |
| | 335 / Anfang | -1,6 | -0,1 | 6,0 | 0,0 | 1,7 | 0,1 |

| Name | Bauteil | N [kN] | Vy [kN] | Vz [kN] | Mx [kNm] | My [kNm] | Mz [kNm] |
|---|---|---|---|---|---|---|---|
| CO11(49) | 153 / Ende | -2,0 | 0,1 | 46,9 | 0,0 | -61,9 | 0,1 |
| | 133 / Anfang | 69,3 | 0,8 | 18,2 | -0,1 | 54,6 | -1,7 |
| | 154 / Anfang | -0,4 | -0,2 | 14,3 | 0,0 | 7,2 | 0,0 |
| | 335 / Anfang | -0,8 | 0,1 | 8,2 | 0,1 | -1,7 | -0,1 |
| CO11(24) | 153 / Ende | -2,2 | 0,1 | 31,9 | 0,0 | -52,4 | 0,1 |
| | 133 / Anfang | 44,9 | -0,1 | 17,6 | 0,0 | 48,4 | 0,5 |
| | 154 / Anfang | -0,6 | -0,2 | 7,7 | 0,0 | 4,0 | 0,0 |
| | 335 / Anfang | -0,2 | 0,1 | 5,2 | 0,0 | 0,5 | -0,1 |
| CO11(25) | 153 / Ende | -2,0 | 0,1 | 36,9 | 0,0 | -53,8 | 0,1 |
| | 133 / Anfang | 56,2 | 1,0 | 16,0 | 0,0 | 46,0 | -2,4 |
| | 154 / Anfang | -0,5 | -0,2 | 14,0 | 0,0 | 7,7 | 0,0 |
| | 335 / Anfang | -0,6 | 0,1 | 5,1 | 0,1 | -2,4 | -0,1 |
| CO11(26) | 153 / Ende | 1,3 | 0,1 | 27,8 | 0,0 | -13,9 | 0,1 |
| | 133 / Anfang | 51,0 | -0,7 | -1,7 | 0,0 | 6,3 | 2,4 |
| | 154 / Anfang | 1,5 | 0,9 | 14,2 | 0,0 | 7,6 | -0,2 |
| | 335 / Anfang | -1,8 | -0,1 | 9,0 | 0,0 | 2,4 | 0,1 |
| CO11(28) | 153 / Ende | 0,7 | 0,1 | 40,4 | 0,0 | -35,1 | 0,1 |
| | 133 / Anfang | 74,4 | -1,0 | 4,0 | 0,0 | 22,3 | 3,5 |
| | 154 / Anfang | 1,1 | 0,6 | 22,6 | 0,0 | 12,7 | -0,1 |
| | 335 / Anfang | -1,7 | -0,1 | 11,4 | 0,1 | 3,5 | 0,0 |
| CO11(29) | 153 / Ende | -0,3 | 0,1 | 45,2 | 0,0 | -50,0 | 0,1 |
| | 133 / Anfang | 79,5 | -1,3 | 10,4 | 0,0 | 37,4 | 4,4 |
| | 154 / Anfang | 0,2 | 0,1 | 22,4 | 0,0 | 12,6 | -0,1 |
| | 335 / Anfang | -1,1 | 0,0 | 12,0 | 0,1 | 4,4 | -0,1 |
| CO11(31) | 153 / Ende | 1,3 | 0,1 | 25,2 | 0,0 | -12,9 | 0,1 |
| | 133 / Anfang | 48,8 | -0,6 | -2,2 | 0,0 | 4,1 | 2,2 |
| | 154 / Anfang | 1,5 | 0,9 | 15,6 | 0,0 | 8,8 | -0,2 |
| | 335 / Anfang | -1,8 | -0,1 | 8,0 | 0,0 | 2,1 | 0,1 |
| CO11(32) | 153 / Ende | -2,1 | 0,1 | 46,7 | 0,0 | -61,8 | 0,1 |
| | 133 / Anfang | 69,6 | 0,8 | 18,2 | -0,1 | 54,2 | -1,6 |
| | 154 / Anfang | -0,4 | -0,2 | 14,7 | 0,0 | 7,5 | 0,0 |
| | 335 / Anfang | -0,8 | 0,1 | 8,2 | 0,1 | -1,6 | -0,1 |
| CO11(33) | 153 / Ende | -1,9 | 0,1 | 27,9 | 0,0 | -43,2 | 0,1 |
| | 133 / Anfang | 39,2 | 1,1 | 14,2 | 0,0 | 39,1 | -2,7 |
| | 154 / Anfang | -0,5 | -0,2 | 8,0 | 0,0 | 4,1 | 0,0 |
| | 335 / Anfang | -0,3 | 0,1 | 3,2 | 0,0 | -2,7 | -0,1 |
| CO11(35) | 153 / Ende | 1,0 | 0,1 | 36,0 | 0,0 | -24,5 | 0,2 |
| | 133 / Anfang | 67,4 | 0,3 | 0,0 | 0,0 | 11,9 | -0,3 |
| | 154 / Anfang | 1,1 | 0,6 | 22,3 | 0,0 | 12,6 | -0,1 |
| | 335 / Anfang | -1,9 | 0,0 | 9,1 | 0,1 | -0,3 | 0,0 |
| CO11(36) | 153 / Ende | 1,6 | 0,1 | 31,3 | 0,0 | -11,6 | 0,2 |
| | 133 / Anfang | 58,1 | 0,5 | -4,1 | 0,0 | 1,8 | -0,8 |
| | 154 / Anfang | 1,7 | 0,9 | 18,0 | 0,0 | 9,7 | -0,2 |
| | 335 / Anfang | -2,2 | -0,1 | 8,8 | 0,0 | -0,8 | 0,0 |
| CO11(14) | 153 / Ende | -1,6 | 0,1 | 53,2 | 0,0 | -67,4 | 0,1 |
| | 133 / Anfang | 84,9 | -0,8 | 18,2 | -0,1 | 56,9 | 3,1 |
| | 154 / Anfang | -0,2 | -0,1 | 19,4 | 0,0 | 10,4 | 0,0 |
| | 335 / Anfang | -1,0 | 0,0 | 12,2 | 0,1 | 3,0 | -0,1 |
| CO11(16) | 153 / Ende | -1,9 | 0,1 | 28,1 | 0,0 | -43,3 | 0,1 |

| Name | Bauteil | N [kN] | Vy [kN] | Vz [kN] | Mx [kNm] | My [kNm] | Mz [kNm] |
|---|---|---|---|---|---|---|---|
| | 133 / Anfang | 38,9 | 1,1 | 14,2 | 0,0 | 39,5 | -2,7 |
| | 154 / Anfang | -0,5 | -0,2 | 7,5 | 0,0 | 3,8 | 0,0 |
| | 335 / Anfang | -0,3 | 0,1 | 3,2 | 0,0 | -2,7 | -0,1 |
| CO11(17) | 153 / Ende | 1,6 | 0,1 | 13,2 | 0,0 | 5,1 | 0,1 |
| | 133 / Anfang | 28,3 | 0,8 | -7,6 | 0,0 | -11,5 | -1,9 |
| | 154 / Anfang | 1,5 | 0,9 | 11,4 | 0,0 | 6,4 | -0,2 |
| | 335 / Anfang | -1,7 | -0,1 | 3,8 | 0,0 | -1,9 | 0,0 |
| CO11(19) | 153 / Ende | 1,5 | 0,1 | 23,7 | 0,0 | -4,7 | 0,1 |
| | 133 / Anfang | 45,0 | 0,5 | -5,1 | 0,0 | -3,1 | -1,0 |
| | 154 / Anfang | 1,6 | 0,9 | 14,5 | 0,0 | 7,8 | -0,2 |
| | 335 / Anfang | -2,0 | -0,1 | 6,9 | 0,0 | -1,0 | 0,0 |
| CO11(1) | 153 / Ende | -2,4 | 0,1 | 50,4 | 0,0 | -70,7 | 0,1 |
| | 133 / Anfang | 75,5 | -0,3 | 21,5 | -0,1 | 63,0 | 1,7 |
| | 154 / Anfang | -0,5 | -0,2 | 14,9 | 0,0 | 7,6 | 0,0 |
| | 335 / Anfang | -0,6 | 0,1 | 10,2 | 0,1 | 1,6 | -0,1 |
| CO11(3) | 153 / Ende | -1,1 | 0,1 | 44,0 | 0,0 | -51,8 | 0,1 |
| | 133 / Anfang | 68,0 | 0,5 | 13,5 | -0,1 | 43,9 | -0,8 |
| | 154 / Anfang | -0,2 | -0,1 | 15,2 | 0,0 | 7,9 | -0,1 |
| | 335 / Anfang | -0,9 | 0,1 | 8,7 | 0,1 | -0,8 | -0,1 |
| CO11(7) | 153 / Ende | 1,0 | 0,1 | 39,1 | 0,0 | -25,6 | 0,2 |
| | 133 / Anfang | 68,6 | 0,2 | 1,0 | 0,0 | 15,5 | 0,2 |
| | 154 / Anfang | 1,1 | 0,6 | 19,1 | 0,0 | 10,1 | -0,1 |
| | 335 / Anfang | -1,9 | -0,1 | 10,5 | 0,1 | 0,2 | 0,0 |
| CO11(9) | 153 / Ende | -2,3 | 0,1 | 40,8 | 0,0 | -63,0 | 0,1 |
| | 133 / Anfang | 62,2 | -0,2 | 19,5 | 0,0 | 55,1 | 1,0 |
| | 154 / Anfang | -0,5 | -0,2 | 14,2 | 0,0 | 7,9 | 0,0 |
| | 335 / Anfang | -0,4 | 0,1 | 7,2 | 0,1 | 0,9 | -0,1 |
| CO11(11) | 153 / Ende | -1,3 | 0,1 | 48,3 | 0,0 | -56,2 | 0,1 |
| | 133 / Anfang | 75,7 | 0,4 | 14,6 | -0,1 | 47,2 | -0,3 |
| | 154 / Anfang | -0,1 | -0,1 | 17,2 | 0,0 | 8,9 | 0,0 |
| | 335 / Anfang | -1,1 | 0,1 | 10,1 | 0,1 | -0,3 | -0,1 |

### Fehlende Lasten

| Name | X [kN] | Y [kN] | Z [kN] | Mx [kNm] | My [kNm] | Mz [kNm] |
|---|---|---|---|---|---|---|
| CO11(37) | -0,8 | -0,6 | 0,0 | 0,4 | 0,1 | 0,0 |
| CO11(38) | -1,1 | -0,8 | 0,0 | 0,4 | 0,0 | 0,0 |
| CO11(39) | -1,1 | 18,8 | 0,0 | -2,6 | 0,0 | 0,0 |
| CO11(40) | -2,3 | 11,1 | 0,1 | -1,3 | -0,2 | 0,0 |
| CO11(41) | -0,7 | 13,2 | 0,1 | -1,7 | 0,0 | 0,0 |
| CO9(42) | -4,1 | -1,7 | 0,0 | 0,3 | -0,4 | 0,0 |
| CO11(43) | -0,4 | -2,3 | 0,0 | 0,6 | 0,1 | 0,0 |
| CO11(44) | -1,9 | 2,9 | 0,0 | 0,0 | -0,1 | 0,0 |
| CO11(45) | -0,1 | 15,7 | 0,0 | -2,2 | 0,1 | 0,0 |
| CO11(46) | -1,6 | 15,7 | 0,0 | -2,1 | -0,1 | 0,0 |
| CO11(47) | 0,6 | 11,8 | 0,0 | -1,7 | 0,1 | 0,0 |
| CO11(48) | -1,2 | -0,7 | 0,0 | 0,4 | 0,0 | 0,0 |
| CO11(49) | 0,0 | 15,6 | 0,0 | -2,2 | 0,1 | 0,0 |
| CO11(24) | -0,4 | 14,8 | 0,0 | -2,1 | 0,0 | 0,0 |
| CO11(25) | 0,3 | 13,5 | 0,0 | -1,9 | 0,1 | 0,0 |
| CO11(26) | -1,5 | 1,3 | 0,0 | 0,2 | -0,1 | 0,0 |
| CO11(28) | -2,0 | 5,9 | 0,0 | -0,5 | -0,1 | 0,0 |
| CO11(29) | -2,2 | 10,3 | 0,0 | -1,3 | -0,1 | 0,0 |
| CO11(31) | -1,4 | 0,7 | 0,0 | 0,2 | 0,0 | 0,0 |
| CO11(32) | -0,1 | 15,6 | 0,0 | -2,2 | 0,1 | 0,0 |
| CO11(33) | 0,6 | 11,6 | 0,0 | -1,7 | 0,1 | 0,0 |
| CO11(35) | -0,9 | 2,2 | 0,0 | 0,0 | 0,1 | 0,0 |
| CO11(36) | -0,7 | -0,8 | 0,0 | 0,4 | 0,1 | 0,0 |
| CO11(14) | -1,7 | 16,4 | 0,0 | -2,2 | -0,1 | 0,0 |
| CO11(16) | 0,7 | 11,7 | 0,0 | -1,7 | 0,1 | 0,0 |
| CO11(17) | 0,1 | -4,4 | 0,0 | 0,9 | 0,1 | 0,0 |
| CO11(19) | -0,5 | -1,9 | 0,0 | 0,6 | 0,1 | 0,0 |
| CO11(1) | -1,1 | 18,6 | 0,0 | -2,6 | 0,0 | 0,0 |
| CO11(3) | -0,4 | 12,1 | 0,0 | -1,6 | 0,1 | 0,0 |
| CO11(7) | -1,1 | 3,2 | 0,0 | -0,2 | 0,0 | 0,0 |
| CO11(9) | -0,7 | 16,6 | 0,0 | -2,3 | 0,0 | 0,0 |
| CO11(11) | -0,7 | 13,1 | 0,0 | -1,7 | 0,0 | 0,0 |

## Nachweis

### Übersicht

| Name | Wert | Nachweisstatus |
|---|---|---|
| Berechnung | 100,0% | OK |
| Platten | 1,2 < 5,0% | OK |
| Schrauben | 94,5 < 100% | OK |
| Schweißnähte | 99,0 < 100% | OK |
| Beulen | Nicht berechnet | |

## Platten

| Name | Material | $t_p$ [mm] | Lasten | $\sigma_{Ed}$ [MPa] | $\varepsilon_{Pl}$ [%] | $\sigma_{c,Ed}$ [MPa] | Status |
|---|---|---|---|---|---|---|---|
| 153-bfl 1 | Baustahl S 355 | 9,8 | CO11(39) | 355,2 | 0,1 | 0,0 | OK |
| 153-tfl 1 | Baustahl S 355 | 9,8 | CO11(39) | 267,5 | 0,0 | 0,0 | OK |
| 153-w 1 | Baustahl S 355 | 6,2 | CO11(39) | 352,9 | 0,0 | 0,0 | OK |
| 133-bfl 1 | Baustahl S 355 | 10,0 | CO11(35) | 335,7 | 0,0 | 66,1 | OK |
| 133-tfl 1 | Baustahl S 355 | 10,0 | CO11(39) | 356,6 | 0,8 | 129,4 | OK |
| 133-w 1 | Baustahl S 355 | 6,5 | CO11(39) | 355,7 | 0,3 | 0,0 | OK |
| 154-bfl 1 | S 355 | 8,0 | CO11(29) | 197,9 | 0,0 | 0,0 | OK |
| 154-tfl 1 | S 355 | 8,0 | CO11(35) | 177,4 | 0,0 | 0,0 | OK |
| 154-w 1 | S 355 | 5,3 | CO11(29) | 128,0 | 0,0 | 0,0 | OK |
| 335-bfl 1 | Baustahl S 355 | 9,8 | CO9(42) | 81,0 | 0,0 | 0,0 | OK |
| 335-tfl 1 | Baustahl S 355 | 9,8 | CO9(42) | 124,8 | 0,0 | 0,0 | OK |
| 335-w 1 | Baustahl S 355 | 6,2 | CO9(42) | 55,5 | 0,0 | 0,0 | OK |
| Steifenblech1 | S 355 | 10,0 | CO11(39) | 355,4 | 0,2 | 0,0 | OK |
| Verschobene Stirnplatte1a | S 355 | 15,0 | CO11(39) | 308,8 | 0,0 | 23,4 | OK |
| Verschobene Stirnplatte1b | S 355 | 15,0 | CO9(42) | 194,6 | 0,0 | 61,2 | OK |
| Stirnblech1 | S 355 | 15,0 | CO11(29) | 309,6 | 0,0 | 95,3 | OK |
| Stirnblech2 | S 355 | 15,0 | CO11(39) | 355,3 | 0,2 | 153,6 | OK |
| Verstärkung1 | S 355 | 10,0 | CO11(39) | 357,5 | 1,2 | 0,0 | OK |
| Rippe1 | S 355 | 10,0 | CO11(39) | 340,4 | 0,0 | 0,0 | OK |

**Bemessungsdaten**

| Material | $f_y$ [MPa] | $\varepsilon_{lim}$ [%] |
|---|---|---|
| Baustahl S 355 | 355,0 | 5,0 |
| S 355 | 355,0 | 5,0 |

**Erläuterung von Symbolen**

| | |
|---|---|
| $t_p$ | Plattendicke |
| $\sigma_{Ed}$ | Vergleichsspannung |
| $\varepsilon_{Pl}$ | Plastische Dehnung |
| $\sigma_{c,Ed}$ | Kontaktspannung |
| $f_y$ | Streckgrenze |
| $\varepsilon_{lim}$ | Grenzwert plastische Dehnung |

*Gesamt, CO11(39)*

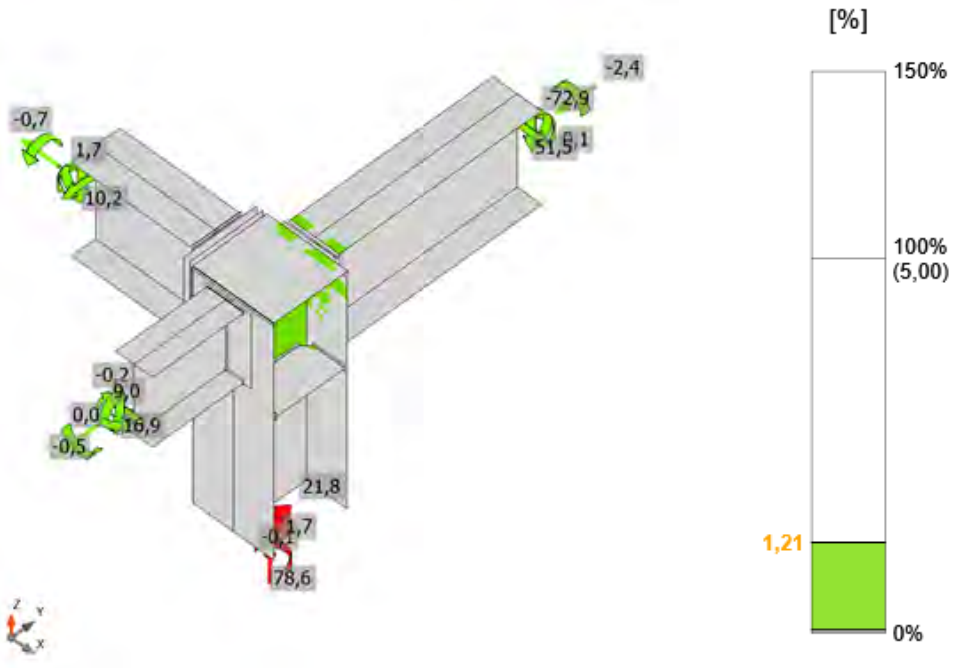


*Dehnung, CO11(39)*

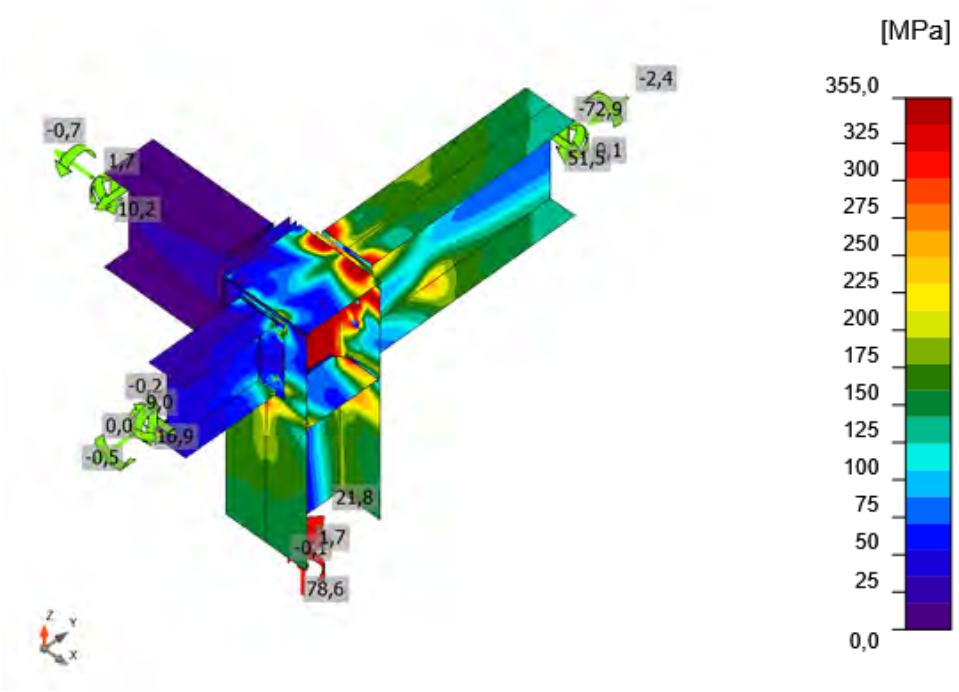


*Vergleichsspannung, CO11(39)*

## Schrauben

| Form | Position | Klasse | Lasten | $F_{t,Ed}$ [kN] | $F_{v,Ed}$ [kN] | $F_{b,Rd}$ [kN] | $Ut_t$ [%] | $Ut_s$ [%] | $Ut_{ts}$ [%] | Konstruktionsregeln | Status |
|---|---|---|---|---|---|---|---|---|---|---|---|
| 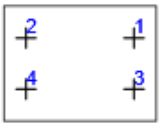 | B1 | M16 8.8 - 1 | CO9(42) | 26,0 | 2,5 | 169,0 | 28,7 | 4,2 | 24,7 | OK | OK |
| | B2 | M16 8.8 - 1 | CO11(16) | 10,4 | 1,1 | 153,3 | 11,5 | 1,8 | 10,0 | OK | OK |
| | B3 | M16 8.8 - 1 | CO9(42) | 25,6 | 2,5 | 171,4 | 28,3 | 4,1 | 24,3 | OK | OK |
| | B4 | M16 8.8 - 1 | CO11(17) | 8,8 | 1,1 | 152,6 | 9,7 | 1,9 | 8,9 | OK | OK |
| 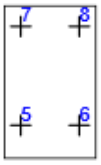 | B5 | M12 8.8 - 2 | CO11(28) | 2,1 | 5,8 | 117,6 | 4,3 | 17,9 | 21,0 | OK | OK |
| | B6 | M12 8.8 - 2 | CO11(35) | 2,2 | 5,5 | 117,6 | 4,6 | 16,9 | 20,2 | OK | OK |
| | B7 | M12 8.8 - 2 | CO11(35) | 33,8 | 5,6 | 113,1 | 69,7 | 17,4 | 67,2 | OK | OK |
| | B8 | M12 8.8 - 2 | CO11(29) | 36,7 | 5,7 | 113,1 | 75,6 | 17,6 | 71,6 | OK | OK |
| 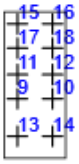 | B9 | M16 8.8 - 3 | CO11(14) | 6,8 | 5,1 | 156,8 | 7,5 | 8,4 | 13,8 | OK | OK |
| | B10 | M16 8.8 - 3 | CO11(14) | 7,2 | 6,6 | 156,8 | 8,0 | 10,9 | 16,6 | OK | OK |
| | B11 | M16 8.8 - 3 | CO11(39) | 29,1 | 2,7 | 120,5 | 32,1 | 4,4 | 27,4 | OK | OK |
| | B12 | M16 8.8 - 3 | CO11(39) | 28,1 | 5,2 | 120,5 | 31,1 | 8,7 | 30,9 | OK | OK |
| | B13 | M16 8.8 - 3 | CO11(39) | 4,3 | 10,9 | 156,8 | 4,8 | 18,1 | 21,5 | OK | OK |
| | B14 | M16 8.8 - 3 | CO11(39) | 6,6 | 12,3 | 156,8 | 7,3 | 20,4 | 25,6 | OK | OK |
| | B15 | M16 8.8 - 3 | CO11(39) | 84,7 | 2,4 | 117,6 | 93,6 | 3,9 | 70,8 | OK | OK |
| | B16 | M16 8.8 - 3 | CO11(39) | 85,5 | 2,0 | 117,6 | 94,5 | 3,3 | 70,9 | OK | OK |
| | B17 | M16 8.8 - 3 | CO11(39) | 69,8 | 2,5 | 156,8 | 77,2 | 4,1 | 59,3 | OK | OK |
| | B18 | M16 8.8 - 3 | CO11(39) | 70,0 | 3,5 | 135,0 | 77,5 | 5,8 | 61,2 | OK | OK |

**Bemessungsdaten**

| Klasse | $F_{t,Rd}$ [kN] | $B_{p,Rd}$ [kN] | $F_{v,Rd}$ [kN] |
|---|---|---|---|
| M16 8.8 - 1 | 90,4 | 281,2 | 60,3 |
| M12 8.8 - 2 | 48,6 | 140,5 | 32,4 |
| M16 8.8 - 3 | 90,4 | 187,5 | 60,3 |

**Erläuterung von Symbolen**

| | |
|---|---|
| $F_{t,Ed}$ | Zugkraft |
| $F_{v,Ed}$ | Resultierende der Schraubenscherkräfte Vy und Vz in Scherebenen |
| $F_{b,Rd}$ | Lochleibungstragfähigkeit der Platte nach EN 1993-1-8 Tab. 3.4 |
| $Ut_t$ | Ausnutzung unter Zug |
| $Ut_s$ | Ausnutzung unter Schub |
| $Ut_{ts}$ | Interaktion von Zug und Schub EN_1993-1-8 Tabelle 3.4 |
| $F_{t,Rd}$ | Zugtragfähigkeit der Schraube nach EN 1993-1-8 Tabelle 3.4 |
| $B_{p,Rd}$ | Durchstanztragfähigkeit nach EN 1993-1-8 Tabelle 3.4 |
| $F_{v,Rd}$ | Schertragfähigkeit der Schraube nach EN 1993-1-8 Tabelle 3.4 |

## Schweißnähte

| Position | Kante | $T_w$ [mm] | L [mm] | Lasten | $\sigma_{w,Ed}$ [MPa] | $\varepsilon_{Pl}$ [%] | $\sigma_{\perp}$ [MPa] | $\tau_{\perp}$ [MPa] | $\tau_{\parallel}$ [MPa] | Ut [%] | $Ut_c$ [%] | Konstruktionsregeln | Status |
|---|---|---|---|---|---|---|---|---|---|---|---|---|---|
| Steifenblech1 | 133-bfl 1 | ◢ 4,0 ◣ | 199 | CO9(42) | 165,8 | 0,0 | 30,7 | 68,3 | -64,7 | 38,1 | 23,0 | OK | OK |
| | | ◢ 4,0 ◣ | 198 | CO11(29) | 103,4 | 0,0 | 21,2 | -58,0 | 7,1 | 23,7 | 14,5 | OK | OK |
| Steifenblech1 | 133-tfl 1 | ◢ 4,0 ◣ | 198 | CO11(39) | 427,0 | 0,1 | -41,4 | 75,5 | -233,4 | 98,0 | 59,6 | OK | OK |
| | | ◢ 4,0 ◣ | 198 | CO11(39) | 426,9 | 0,0 | 191,8 | -43,5 | -215,9 | 98,0 | 55,8 | OK | OK |
| Steifenblech1 | 133-w 1 | ◢ 4,0 ◣ | 179 | CO11(39) | 202,8 | 0,0 | -8,2 | -12,1 | 116,4 | 46,6 | 36,3 | OK | OK |
| | | ◢ 4,0 ◣ | 179 | CO11(39) | 160,9 | 0,0 | -7,9 | 4,0 | -92,7 | 36,9 | 28,3 | OK | OK |
| Verschobene Stirnplatte1a | 133-tfl 1 | ◢ 4,0 ◣ | 229 | CO11(39) | 280,8 | 0,0 | -83,2 | -147,8 | 46,3 | 64,5 | 45,7 | OK | OK |
| | | ◢ 4,0 ◣ | 229 | CO11(39) | 427,2 | 0,2 | -228,7 | 19,8 | -207,4 | 98,1 | 72,1 | OK | OK |
| Verschobene Stirnplatte1a | 133-bfl 1 | ◢ 4,0 ◣ | 229 | CO9(42) | 418,8 | 0,0 | -258,6 | -189,6 | 15,2 | 96,2 | 63,8 | OK | OK |
| | | ◢ 4,0 ◣ | 229 | CO9(42) | 245,5 | 0,0 | -75,6 | -103,7 | -86,2 | 56,4 | 38,3 | OK | OK |
| Verschobene Stirnplatte1b | 335-bfl 1 | ◢ 4,0 ◣ | 120 | CO11(25) | 195,8 | 0,0 | -71,5 | -57,2 | 88,3 | 44,9 | 27,7 | OK | OK |
| | | ◢ 4,0 ◣ | 120 | CO11(25) | 174,0 | 0,0 | -52,4 | 58,0 | 76,2 | 39,9 | 25,6 | OK | OK |
| Verschobene Stirnplatte1b | 335-tfl 1 | ◢ 4,0 ◣ | 120 | CO9(42) | 427,0 | 0,1 | -143,1 | -147,8 | -179,1 | 98,0 | 62,2 | OK | OK |
| | | ◢ 4,0 ◣ | 120 | CO9(42) | 427,0 | 0,1 | -150,2 | 146,0 | 178,7 | 98,0 | 62,7 | OK | OK |
| Verschobene Stirnplatte1b | 335-w 1 | ◢ 4,0 ◣ | 228 | CO9(42) | 75,3 | 0,0 | 36,5 | 38,0 | -1,2 | 17,3 | 10,4 | OK | OK |
| | | ◢ 4,0 ◣ | 228 | CO9(42) | 75,1 | 0,0 | 38,6 | -37,1 | 2,2 | 17,2 | 10,3 | OK | OK |
| Stirnblech1 | 154-bfl 1 | ◢ 4,0 ◣ | 91 | CO11(29) | 195,7 | 0,0 | 99,7 | 54,9 | -80,3 | 44,9 | 31,6 | OK | OK |
| | | ◢ 4,0 ◣ | 91 | CO11(29) | 180,4 | 0,0 | 111,2 | 58,9 | 57,1 | 41,4 | 29,3 | OK | OK |
| Stirnblech1 | 154-tfl 1 | ◢ 4,0 ◣ | 90 | CO11(35) | 227,1 | 0,0 | -129,2 | -105,8 | 20,5 | 52,1 | 34,3 | OK | OK |

| Position | Kante | $T_w$ [mm] | L [mm] | Lasten | $\sigma_{w,Ed}$ [MPa] | $\varepsilon_{Pl}$ [%] | $\sigma_{\perp}$ [MPa] | $\tau_{\perp}$ [MPa] | $\tau_{\parallel}$ [MPa] | Ut [%] | $Ut_c$ [%] | Konstruktionsregeln | Status |
|---|---|---|---|---|---|---|---|---|---|---|---|---|---|
| | | ◢ 4,0 ◣ | 90 | CO11(35) | 193,6 | 0,0 | -72,6 | 96,1 | 38,8 | 44,5 | 27,0 | OK | OK |
| Stirnblech1 | 154-w 1 | ◢ 4,0 ◣ | 169 | CO11(28) | 141,1 | 0,0 | 71,7 | 69,9 | -4,9 | 32,4 | 22,6 | OK | OK |
| | | ◢ 4,0 ◣ | 169 | CO11(28) | 141,4 | 0,0 | 69,3 | -70,9 | 5,3 | 32,5 | 22,8 | OK | OK |
| Stirnblech2 | 153-bfl 1 | ◢ 6,0 ◣ | 120 | CO11(39) | 281,5 | 0,0 | 172,5 | 54,0 | -116,6 | 64,6 | 47,9 | OK | OK |
| | | ◢ 6,0 ◣ | 119 | CO11(39) | 210,5 | 0,0 | -0,4 | 41,7 | -114,2 | 48,3 | 30,7 | OK | OK |
| Stirnblech2 | 153-tfl 1 | ◢ 6,0 ◣ | 120 | CO11(39) | 220,7 | 0,0 | -88,2 | -66,7 | 95,9 | 50,7 | 30,0 | OK | OK |
| | | ◢ 6,0 ◣ | 120 | CO11(39) | 150,6 | 0,0 | -40,5 | 62,0 | -56,4 | 34,6 | 21,9 | OK | OK |
| Stirnblech2 | 153-w 1 | ◢ 6,0 ◣ | 226 | CO11(39) | 243,8 | 0,0 | 113,9 | 116,2 | -44,7 | 56,0 | 35,0 | OK | OK |
| | | ◢ 6,0 ◣ | 226 | CO11(39) | 259,4 | 0,0 | 121,6 | -119,2 | 57,4 | 59,6 | 37,4 | OK | OK |
| Stirnblech2 | Verstärkung1 | ◢ 6,0 ◣ | 99 | CO11(39) | 431,4 | 2,6 | -208,6 | -208,7 | 62,9 | 99,0 | 83,9 | OK | OK |
| | | ◢ 6,0 ◣ | 99 | CO11(39) | 431,4 | 2,6 | -208,6 | 208,4 | -64,0 | 99,0 | 84,4 | OK | OK |
| 153-tfl 1 | Verstärkung1 | ◢ 6,0 ◣ | 199 | CO11(39) | 420,1 | 0,0 | -120,8 | -126,9 | -194,6 | 96,5 | 63,1 | OK | OK |
| | | ◢ 6,0 ◣ | 199 | CO11(39) | 426,8 | 0,0 | -128,4 | 122,5 | 200,6 | 98,0 | 63,4 | OK | OK |
| 133-bfl 1 | Rippe1 | ◢ 4,0 ◣ | 79 | CO11(39) | 272,4 | 0,0 | -170,5 | -118,2 | -32,5 | 62,5 | 43,8 | OK | OK |
| | | ◢ 4,0 ◣ | 79 | CO11(39) | 134,3 | 0,0 | 95,0 | -42,8 | 34,2 | 30,8 | 25,7 | OK | OK |
| 133-w 1 | Rippe1 | ◢ 4,0 ◣ | 134 | CO11(39) | 152,8 | 0,0 | 14,9 | -2,8 | 87,7 | 35,1 | 19,9 | OK | OK |
| | | ◢ 4,0 ◣ | 134 | CO11(45) | 90,2 | 0,0 | 23,3 | -9,3 | 49,4 | 20,7 | 14,1 | OK | OK |
| 133-tfl 1 | Rippe1 | ◢ 4,0 ◣ | 79 | CO11(39) | 171,9 | 0,0 | 118,4 | 67,0 | -26,3 | 39,5 | 26,8 | OK | OK |
| | | ◢ 4,0 ◣ | 79 | CO11(39) | 323,4 | 0,0 | -196,9 | 145,6 | 27,0 | 74,2 | 42,8 | OK | OK |

**Bemessungsdaten**

| Material | $f_u$ [MPa] | $\beta_w$ [-] | $\sigma_{w,Rd}$ [MPa] | 0.9 σ [MPa] |
|---|---|---|---|---|
| S 355 | 490,0 | 0,90 | 435,6 | 352,8 |

**Erläuterung von Symbolen**

| | |
|---|---|
| $T_w$ | Nahtdicke a |
| L | Länge |
| $\sigma_{w,Ed}$ | Vergleichsspannung |
| $\varepsilon_{Pl}$ | Dehnung |
| $\sigma_{\perp}$ | Senkrechte Spannung |
| $\tau_{\perp}$ | Scherspannung senkrecht zur Schweißnahtachse |
| $\tau_{\parallel}$ | Scherspannung parallel zur Schweißnahtachse |
| Ut | Ausnutzung |
| $Ut_c$ | Schätzung der Schweißnahtkapazität |
| ◢ | Kehlnaht |
| $f_u$ | Grenzfestigkeit der Schweißnaht |
| $\beta_w$ | Korrelationsfaktor nach EN 1993-1-8 Tab. 4.1 |
| $\sigma_{w,Rd}$ | Tragfähigkeit der Schweißnaht |
| 0.9 σ | Senkrechter Spannungswiderstand - 0.9*fu / γM2 |

### Beulen

**Die Beulanalyse wurde nicht berechnet.**

## Normeinstellungen

| Position | Wert | Einheit | Bezug |
|---|---|---|---|
| Sicherheitsfaktor $\gamma_{M0}$ | 1,00 | - | EN 1993-1-1 – 6.1 |
| Sicherheitsfaktor $\gamma_{M1}$ | 1,00 | - | EN 1993-1-1 – 6.1 |
| Sicherheitsfaktor $\gamma_{M2}$ | 1,25 | - | EN 1993-1-1 – 6.1 |
| Sicherheitsfaktor $\gamma_{M3}$ | 1,25 | - | EN 1993-1-8 – Table 2.1 |
| Sicherheitsfaktor $\gamma_C$ | 1,50 | - | EN 1992-1-1 – 2.4.2.4 |
| Sicherheitsfaktor $\gamma_{Inst}$ | 1,20 | - | EN 1992-4 – Table 4.1 |
| Verbindungskoeffizient βj | 0,67 | - | EN 1993-1-8 – 6.2.5(7) |
| Wirksame Fläche - Einfluss der Netzgröße | 0,10 | - | |
| Reibungsbeiwert - Beton | 0,25 | - | EN 1993-1-8 |
| Reibungskoeffizient bei gleitfesten Verbindungen | 0,30 | - | EN 1993-1-8 – Table 3.7 |
| Plastische Dehnung - Grenzwert | 0,05 | - | EN 1993-1-5 |
| Konstruktionsregeln | Ja | | |
| Distance between bolts [d0] | 2,20 | - | EN 1993-1-8 – Table 3.3 |
| Distance between bolts and edge [d0] | 1,20 | - | EN 1993-1-8 – Table 3.3 |
| Nachweis der Tragfähigkeit bei Betonausbruch | Beide | | |
| Berechnetes αb für Lochleibungsnachweis anwenden. | Ja | | EN 1993-1-8 – Table 3.4 |
| Gerissener Beton | Ja | | EN 1992-4 |
| Überprüfen der lokalen Verformung | Ja | | |
| Lokale Verformung - Grenzwert | 0,03 | - | CIDECT DG 1, 3 – 1.1 |
| Geometrische Nichtlinearität (GMNA) | Ja | | Analyse mit großen Verformungen für Verbindungen mit Hohlprofilen |
| Ausgesteiftes System | Nein | | EN 1993-1-8 – 5.2.2.5 |

| | |
|---|---|
| **Projekt:** | **IdeaStatiCa-Stadion_Fazanerija_JK-6_BR - 1008** |
| **Projektnummer:** | **Detajl D2-O6** |
| **Autor:** | **mag. Igor Gorup dipl. ing.** |

## Projektdaten

| | |
|---|---|
| Projektname | IdeaStatiCa-Stadion_Fazanerija_JK-6_BR - 1008 |
| Projektnummer | Detajl D2-O6 |
| Autor | mag. Igor Gorup dipl. ing. |
| Beschreibung | |
| Datum | 18.06.2025 |
| Norm | EN |

## Material

| | |
|---|---|
| Stahl | Baustahl S 355, Baustahl S 235, S 355 |

# Projektposition 1008

## Bemessung

| | |
|---|---|
| Name | 1008 |
| Beschreibung | |
| Berechnung | Spannung, Dehnung/ Lasten im Gleichgewicht |

### Bauteile

#### Geometrie

| Name | Querschnitt | β – Rotation [°] | Y - Rotation [°] | α - Rotation [°] | Abstand ex [mm] | Abstand ey [mm] | Abstand ez [mm] |
|---|---|---|---|---|---|---|---|
| 154 | 839 - IPE180 | 90,0 | 0,0 | -180,0 | -45 | 0 | 0 |
| 134 | 839 - IPE180 | 0,0 | 0,0 | -180,0 | 0 | 0 | 0 |
| 215 | 795 - RHS80x80 | -90,0 | 90,0 | -90,0 | 0 | 0 | 0 |

#### Auflager und Kräfte

| Name | Auflager | Kräfte in | X [mm] |
|---|---|---|---|
| 154 / ende | N-Vy-Vz-Mx-My-Mz | Position | 0 |
| 134 / anfang | | Position | 0 |
| 215 / ende | | Position | 0 |

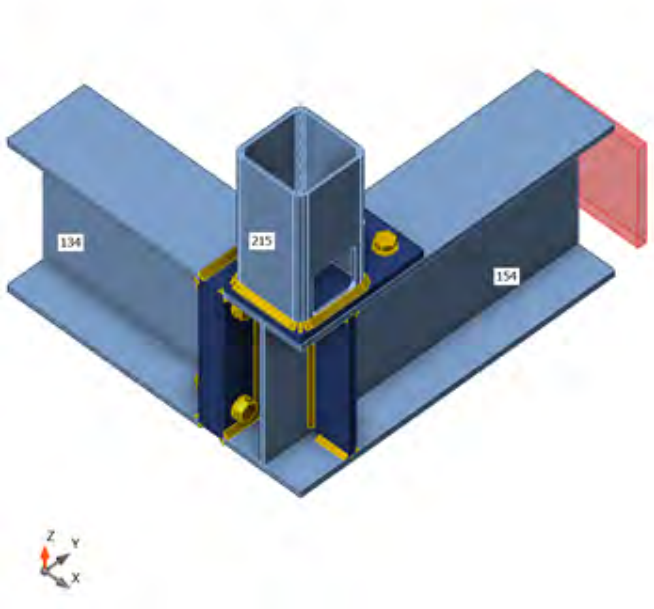


### Querschnitte

| Name | Material |
|---|---|
| 839 - IPE180 | S 355 |
| 795 - RHS80x80 | S 355 |

## Schrauben

| Name | Durchmesser [mm] | $f_y$ [MPa] | $f_u$ [MPa] | Bruttofläche [$mm^2$] |
|---|---|---|---|---|
| M12 8.8 | 12 | 640,0 | 800,0 | 113 |

## Lasteinwirkungen (Kräfte im Gleichgewicht)

| Name | Bauteil | N [kN] | Vy [kN] | Vz [kN] | Mx [kNm] | My [kNm] | Mz [kNm] |
|---|---|---|---|---|---|---|---|
| CO11(26) | 154 / Ende | -0,1 | 0,0 | -16,3 | 0,0 | 0,0 | 0,0 |
| | 134 / Anfang | 0,3 | 0,0 | 7,0 | 0,0 | 0,0 | 0,0 |
| | 215 / Ende | -9,4 | 0,0 | 0,0 | 0,0 | 0,0 | 0,0 |
| CO9(27) | 154 / Ende | -0,3 | 0,2 | 0,3 | 0,0 | 0,0 | 0,1 |
| | 134 / Anfang | 0,3 | 0,0 | 0,0 | 0,0 | 0,0 | 0,0 |
| | 215 / Ende | 0,3 | 0,0 | 0,0 | 0,1 | 0,0 | 0,0 |
| CO11(28) | 154 / Ende | 0,5 | 0,2 | -8,2 | 0,0 | 0,0 | 0,1 |
| | 134 / Anfang | 0,0 | 0,6 | 4,1 | 0,0 | 0,0 | -0,1 |
| | 215 / Ende | -4,1 | 0,0 | 0,0 | 0,0 | 0,0 | 0,0 |
| CO11(29) | 154 / Ende | -1,5 | -0,8 | -10,7 | 0,0 | 0,0 | -0,4 |
| | 134 / Anfang | 0,6 | -1,6 | 5,1 | 0,0 | 0,0 | 0,4 |
| | 215 / Ende | -5,6 | 0,0 | 0,0 | 0,0 | 0,0 | 0,0 |
| CO11(30) | 154 / Ende | -0,2 | 0,0 | -11,6 | 0,0 | 0,0 | 0,0 |
| | 134 / Anfang | 0,4 | 0,0 | 5,4 | 0,0 | 0,0 | 0,0 |
| | 215 / Ende | -6,1 | 0,0 | 0,0 | 0,0 | 0,0 | 0,0 |
| CO11(31) | 154 / Ende | 0,5 | 0,2 | -6,8 | 0,0 | 0,0 | 0,2 |
| | 134 / Anfang | 0,0 | 0,6 | 3,2 | 0,0 | 0,0 | -0,1 |
| | 215 / Ende | -3,6 | 0,0 | 0,0 | 0,0 | 0,0 | 0,0 |
| CO11(32) | 154 / Ende | -1,4 | -0,9 | -8,1 | 0,0 | 0,0 | -0,4 |
| | 134 / Anfang | 0,4 | -1,6 | 3,9 | 0,0 | 0,0 | 0,4 |
| | 215 / Ende | -4,2 | 0,0 | 0,0 | -0,1 | 0,0 | 0,0 |
| CO11(33) | 154 / Ende | -0,2 | 0,0 | -10,7 | 0,0 | 0,0 | 0,0 |
| | 134 / Anfang | 0,5 | 0,0 | 5,1 | 0,0 | 0,0 | 0,0 |
| | 215 / Ende | -5,6 | 0,0 | 0,0 | 0,0 | 0,0 | 0,0 |
| CO11(34) | 154 / Ende | -0,2 | 0,0 | -11,8 | 0,0 | 0,0 | 0,0 |
| | 134 / Anfang | 0,5 | 0,0 | 5,5 | 0,0 | 0,0 | 0,0 |
| | 215 / Ende | -6,3 | 0,0 | 0,0 | 0,0 | 0,0 | 0,0 |
| CO11(35) | 154 / Ende | -1,5 | -0,9 | -11,6 | 0,0 | 0,0 | -0,4 |
| | 134 / Anfang | 0,6 | -1,6 | 5,6 | 0,0 | 0,0 | 0,4 |
| | 215 / Ende | -6,0 | 0,0 | 0,0 | -0,1 | 0,0 | 0,0 |
| CO11(15) | 154 / Ende | -1,6 | -0,8 | -14,1 | 0,0 | 0,0 | -0,4 |
| | 134 / Anfang | 0,7 | -1,6 | 6,5 | 0,0 | 0,0 | 0,4 |
| | 215 / Ende | -7,7 | 0,0 | 0,0 | 0,0 | 0,0 | 0,0 |
| CO11(16) | 154 / Ende | 0,6 | 0,2 | -4,2 | 0,0 | 0,0 | 0,1 |
| | 134 / Anfang | -0,2 | 0,6 | 2,3 | 0,0 | 0,0 | -0,1 |
| | 215 / Ende | -2,0 | 0,0 | 0,0 | 0,0 | 0,0 | 0,0 |
| CO11(17) | 154 / Ende | 0,5 | 0,2 | -4,1 | 0,0 | 0,0 | 0,2 |
| | 134 / Anfang | 0,0 | 0,6 | 2,3 | 0,0 | 0,0 | -0,1 |
| | 215 / Ende | -1,8 | 0,0 | 0,0 | 0,0 | 0,0 | 0,0 |
| CO11(18) | 154 / Ende | -1,5 | -0,8 | -14,4 | 0,0 | 0,0 | -0,4 |
| | 134 / Anfang | 0,6 | -1,6 | 6,5 | 0,0 | 0,0 | 0,4 |
| | 215 / Ende | -7,8 | 0,0 | 0,0 | -0,1 | 0,0 | 0,0 |
| CO11(19) | 154 / Ende | -1,0 | -0,5 | -16,5 | 0,0 | 0,0 | -0,3 |
| | 134 / Anfang | 0,5 | -1,0 | 7,2 | 0,0 | 0,0 | 0,2 |

| Name | Bauteil | N [kN] | Vy [kN] | Vz [kN] | Mx [kNm] | My [kNm] | Mz [kNm] |
|---|---|---|---|---|---|---|---|
| | 215 / Ende | -9,3 | 0,0 | 0,0 | 0,0 | 0,0 | 0,0 |
| CO11(20) | 154 / Ende | -0,2 | 0,0 | -16,1 | 0,0 | 0,0 | 0,0 |
| | 134 / Anfang | 0,5 | 0,0 | 6,9 | 0,0 | 0,0 | 0,0 |
| | 215 / Ende | -9,2 | 0,0 | 0,0 | 0,0 | 0,0 | 0,0 |
| CO11(22) | 154 / Ende | -1,6 | -0,8 | -11,8 | 0,0 | 0,0 | -0,4 |
| | 134 / Anfang | 0,7 | -1,6 | 5,7 | 0,0 | 0,0 | 0,4 |
| | 215 / Ende | -6,2 | 0,0 | 0,0 | 0,0 | 0,0 | 0,0 |
| CO11(23) | 154 / Ende | 0,6 | 0,2 | -7,0 | 0,0 | 0,0 | 0,1 |
| | 134 / Anfang | -0,2 | 0,6 | 3,2 | 0,0 | 0,0 | -0,1 |
| | 215 / Ende | -3,8 | 0,0 | 0,0 | 0,0 | 0,0 | 0,0 |
| CO11(24) | 154 / Ende | 0,3 | 0,2 | -14,3 | 0,0 | 0,0 | 0,1 |
| | 134 / Anfang | 0,1 | 0,4 | 6,2 | 0,0 | 0,0 | -0,1 |
| | 215 / Ende | -8,0 | 0,0 | 0,0 | 0,0 | 0,0 | 0,0 |
| CO11(3) | 154 / Ende | 0,5 | 0,2 | -9,6 | 0,0 | 0,0 | 0,2 |
| | 134 / Anfang | 0,1 | 0,6 | 4,4 | 0,0 | 0,0 | -0,1 |
| | 215 / Ende | -5,2 | 0,0 | 0,0 | 0,0 | 0,0 | 0,0 |
| CO11(4) | 154 / Ende | -1,4 | -0,9 | -8,8 | 0,0 | 0,0 | -0,4 |
| | 134 / Anfang | 0,5 | -1,6 | 4,3 | 0,0 | 0,0 | 0,4 |
| | 215 / Ende | -4,5 | 0,0 | 0,0 | -0,1 | 0,0 | 0,0 |
| CO11(9) | 154 / Ende | -1,4 | -0,8 | -13,7 | 0,0 | 0,0 | -0,4 |
| | 134 / Anfang | 0,5 | -1,6 | 6,1 | 0,0 | 0,0 | 0,4 |
| | 215 / Ende | -7,6 | 0,0 | 0,0 | -0,1 | 0,0 | 0,0 |
| CO11(10) | 154 / Ende | 0,5 | 0,2 | -8,0 | 0,0 | 0,0 | 0,2 |
| | 134 / Anfang | 0,1 | 0,6 | 4,1 | 0,0 | 0,0 | -0,1 |
| | 215 / Ende | -4,0 | 0,0 | 0,0 | 0,0 | 0,0 | 0,0 |
| CO11(11) | 154 / Ende | 0,5 | 0,2 | -4,5 | 0,0 | 0,0 | 0,2 |
| | 134 / Anfang | 0,0 | 0,6 | 2,4 | 0,0 | 0,0 | -0,1 |
| | 215 / Ende | -2,1 | 0,0 | 0,0 | 0,0 | 0,0 | 0,0 |
| CO11(13) | 154 / Ende | -1,0 | -0,5 | -16,3 | 0,0 | 0,0 | -0,2 |
| | 134 / Anfang | 0,6 | -1,0 | 7,2 | 0,0 | 0,0 | 0,2 |
| | 215 / Ende | -9,2 | 0,0 | 0,0 | 0,0 | 0,0 | 0,0 |
| CO11(14) | 154 / Ende | -1,5 | -0,8 | -11,4 | 0,0 | 0,0 | -0,4 |
| | 134 / Anfang | 0,7 | -1,6 | 5,5 | 0,0 | 0,0 | 0,4 |
| | 215 / Ende | -5,9 | 0,0 | 0,0 | 0,0 | 0,0 | 0,0 |

### Fehlende Lasten

| Name | X [kN] | Y [kN] | Z [kN] | Mx [kNm] | My [kNm] | Mz [kNm] |
|---|---|---|---|---|---|---|
| CO11(26) | 0,4 | -0,1 | 0,0 | -0,7 | 0,0 | 0,0 |
| CO9(27) | 0,5 | -0,3 | 0,0 | 0,0 | 0,0 | 0,0 |
| CO11(28) | 0,2 | -0,1 | 0,0 | -0,4 | 0,0 | 0,0 |
| CO11(29) | -0,2 | 0,1 | 0,0 | -0,5 | 0,0 | 0,0 |
| CO11(30) | 0,3 | -0,1 | 0,0 | -0,5 | 0,0 | 0,0 |
| CO11(31) | 0,2 | -0,1 | 0,0 | -0,3 | 0,0 | 0,0 |
| CO11(32) | -0,5 | 0,2 | 0,0 | -0,4 | 0,0 | 0,0 |
| CO11(33) | 0,4 | -0,1 | 0,0 | -0,5 | 0,0 | 0,0 |
| CO11(34) | 0,5 | -0,2 | 0,0 | -0,5 | 0,0 | 0,0 |
| CO11(35) | -0,3 | 0,1 | 0,0 | -0,5 | 0,0 | 0,0 |
| CO11(15) | -0,1 | 0,0 | 0,0 | -0,6 | 0,0 | 0,0 |
| CO11(16) | 0,0 | 0,0 | 0,0 | -0,2 | 0,0 | 0,0 |
| CO11(17) | 0,2 | -0,1 | 0,0 | -0,2 | 0,0 | 0,0 |
| CO11(18) | -0,2 | 0,1 | 0,0 | -0,6 | 0,0 | 0,0 |
| CO11(19) | 0,0 | 0,0 | 0,0 | -0,7 | 0,0 | 0,0 |
| CO11(20) | 0,5 | -0,2 | 0,0 | -0,7 | 0,0 | 0,0 |
| CO11(22) | -0,1 | 0,0 | 0,0 | -0,5 | 0,0 | 0,0 |
| CO11(23) | 0,1 | 0,0 | 0,0 | -0,3 | 0,0 | 0,0 |
| CO11(24) | 0,3 | -0,1 | 0,0 | -0,6 | 0,0 | 0,0 |
| CO11(3) | 0,3 | -0,1 | 0,0 | -0,4 | 0,0 | 0,0 |
| CO11(4) | -0,4 | 0,1 | 0,0 | -0,4 | 0,0 | 0,0 |
| CO11(9) | -0,3 | 0,1 | 0,0 | -0,6 | 0,0 | 0,0 |
| CO11(10) | 0,3 | -0,1 | 0,0 | -0,4 | 0,0 | 0,0 |
| CO11(11) | 0,2 | -0,1 | 0,0 | -0,2 | 0,0 | 0,0 |
| CO11(13) | 0,2 | 0,0 | 0,0 | -0,7 | 0,0 | 0,0 |
| CO11(14) | -0,1 | 0,1 | 0,0 | -0,5 | 0,0 | 0,0 |

## Nachweis

### Übersicht

| Name | Wert | Nachweisstatus |
|---|---|---|
| Berechnung | 100,0% | OK |
| Platten | 0,0 < 5,0% | OK |
| Lokale Verformung | 0,0 < 3% | OK |
| Schrauben | 11,4 < 100% | OK |
| Schweißnähte | 14,0 < 100% | OK |
| Beulen | Nicht berechnet | |

## Platten

| Name | $t_p$ [mm] | Lasten | $\sigma_{Ed}$ [MPa] | $\varepsilon_{Pl}$ [%] | $\sigma_{c,Ed}$ [MPa] | Status |
|---|---|---|---|---|---|---|
| 154-bfl 1 | 8,0 | CO11(20) | 44,3 | 0,0 | 7,8 | OK |
| 154-tfl 1 | 8,0 | CO11(18) | 46,4 | 0,0 | 0,0 | OK |
| 154-w 1 | 5,3 | CO11(19) | 44,5 | 0,0 | 0,0 | OK |
| 134-bfl 1 | 8,0 | CO11(29) | 18,4 | 0,0 | 0,0 | OK |
| 134-tfl 1 | 8,0 | CO11(18) | 28,1 | 0,0 | 0,0 | OK |
| 134-w 1 | 5,3 | CO11(18) | 22,6 | 0,0 | 0,0 | OK |
| 215 | 4,0 | CO11(9) | 33,8 | 0,0 | 0,0 | OK |
| Verschobene Stirnplatte1a | 14,0 | CO11(18) | 39,4 | 0,0 | 21,5 | OK |
| Verschobene Stirnplatte1b | 15,0 | CO11(18) | 34,1 | 0,0 | 21,5 | OK |
| STEIFF | 10,0 | CO11(18) | 15,6 | 0,0 | 0,0 | OK |
| Stirnblech1 | 10,0 | CO11(20) | 11,0 | 0,0 | 9,5 | OK |
| Rippe1 | 10,0 | CO11(20) | 9,0 | 0,0 | 0,0 | OK |

### Bemessungsdaten

| Material | $f_y$ [MPa] | $\varepsilon_{lim}$ [%] |
|---|---|---|
| S 355 | 355,0 | 5,0 |

### Erläuterung von Symbolen

| | |
|---|---|
| $t_p$ | Plattendicke |
| $\sigma_{Ed}$ | Vergleichsspannung |
| $\varepsilon_{Pl}$ | Plastische Dehnung |
| $\sigma_{c,Ed}$ | Kontaktspannung |
| $f_y$ | Streckgrenze |
| $\varepsilon_{lim}$ | Grenzwert plastische Dehnung |

## Lokale Verformung

| Name | $d_0$ [mm] | Lasten | $\delta$ [mm] | $\delta_{lim}$ [mm] | $\delta/d_0$ [%] | Nachweisstatus |
|---|---|---|---|---|---|---|
| 215 | 80 | CO11(14) | 0 | 2 | 0,0 | OK |

### Erläuterung von Symbolen

| | |
|---|---|
| $d_0$ | Querschnittsgröße |
| $\delta$ | Lokale Verformung im Querschnitt |
| $\delta_{lim}$ | Zulässige Verformung |

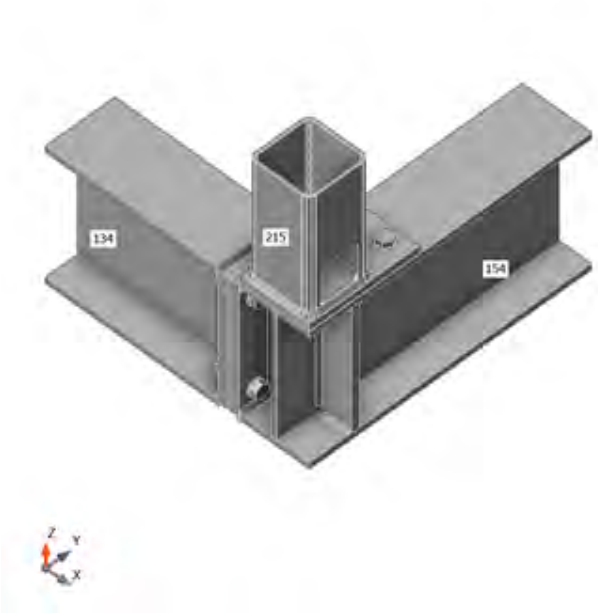


*Gesamt, CO11(20)*

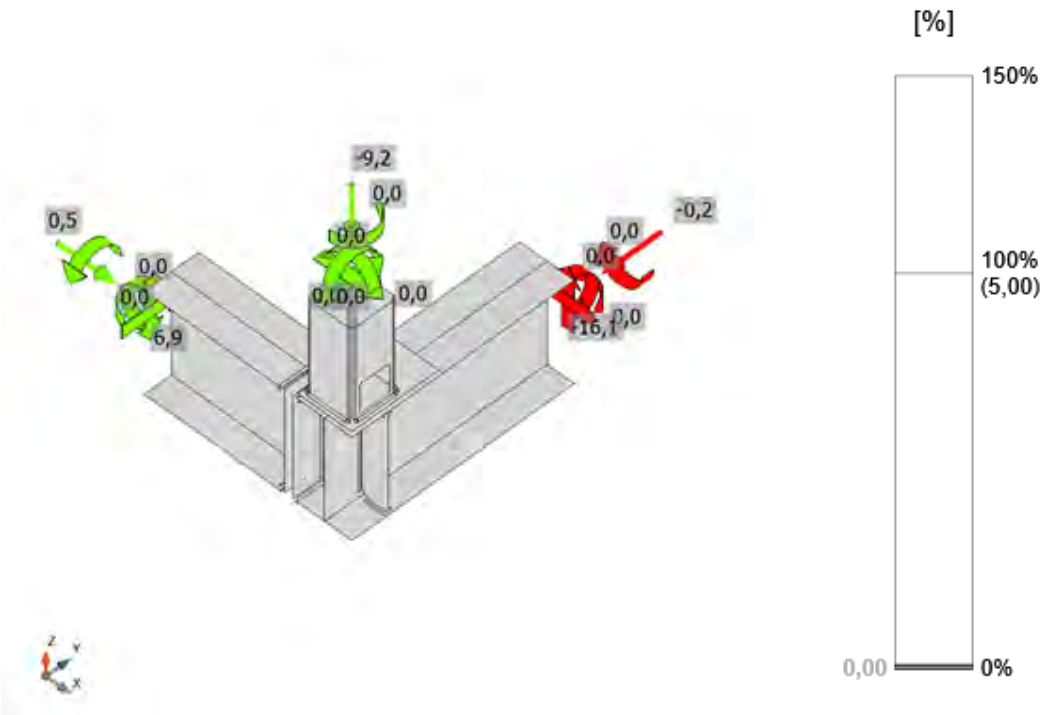


*Dehnung, CO11(20)*

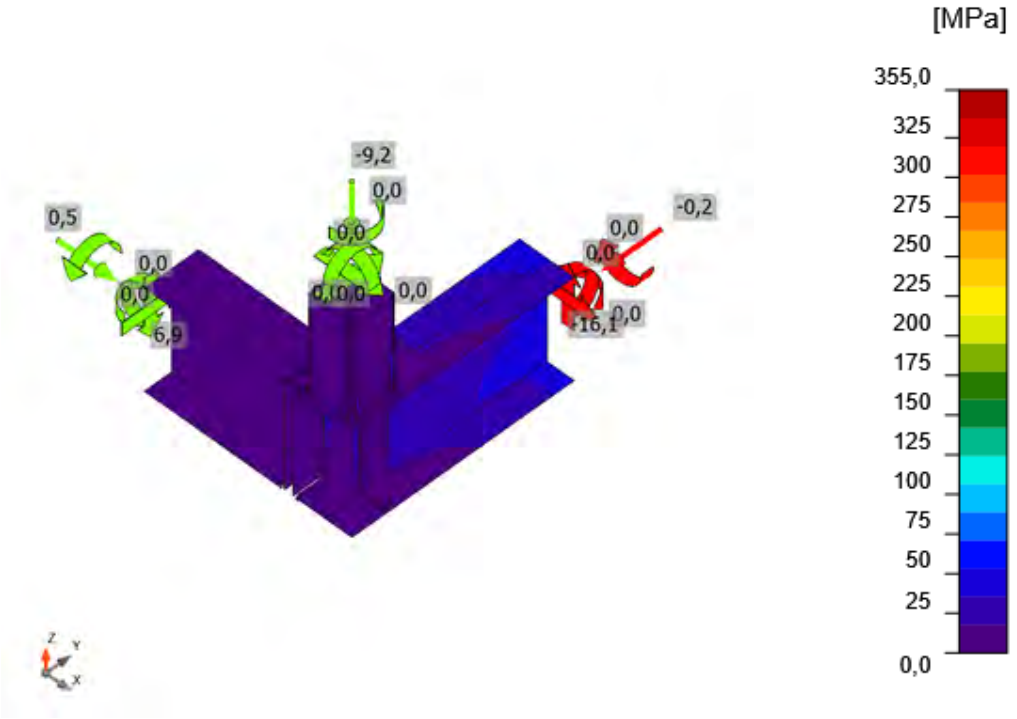


*Vergleichsspannung, CO11(20)*

## Schrauben

| Form | Position | Klasse | Lasten | $F_{t,Ed}$ [kN] | $F_{v,Ed}$ [kN] | $F_{b,Rd}$ [kN] | $Ut_t$ [%] | $Ut_s$ [%] | $Ut_{ts}$ [%] | Konstruktionsregeln | Status |
|---|---|---|---|---|---|---|---|---|---|---|---|
| 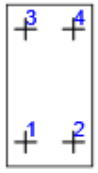 | B1 | M12 8.8 - 1 | CO11(19) | 0,9 | 1,8 | 109,8 | 1,8 | 5,6 | 6,9 | OK | OK |
| | B2 | M12 8.8 - 1 | CO11(18) | 4,1 | 1,7 | 109,8 | 8,5 | 5,3 | 11,4 | OK | OK |
| | B3 | M12 8.8 - 1 | CO11(19) | 0,1 | 1,8 | 117,6 | 0,2 | 5,6 | 5,7 | OK | OK |
| | B4 | M12 8.8 - 1 | CO11(19) | 0,0 | 1,8 | 117,6 | 0,0 | 5,6 | 5,6 | OK | OK |
| 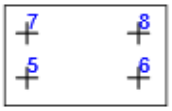 | B5 | M12 8.8 - 2 | CO9(27) | 0,1 | 0,4 | 61,5 | 0,2 | 1,3 | 1,4 | OK | OK |
| | B6 | M12 8.8 - 2 | CO9(27) | 0,2 | 0,4 | 75,4 | 0,4 | 1,3 | 1,6 | OK | OK |
| | B7 | M12 8.8 - 2 | CO9(27) | 0,1 | 0,4 | 75,4 | 0,3 | 1,2 | 1,4 | OK | OK |
| | B8 | M12 8.8 - 2 | CO9(27) | 0,1 | 0,4 | 61,5 | 0,2 | 1,2 | 1,4 | OK | OK |

**Bemessungsdaten**

| Klasse | $F_{t,Rd}$ [kN] | $B_{p,Rd}$ [kN] | $F_{v,Rd}$ [kN] |
|---|---|---|---|
| M12 8.8 - 1 | 48,6 | 196,7 | 32,4 |
| M12 8.8 - 2 | 48,6 | 112,4 | 32,4 |

**Erläuterung von Symbolen**

| | |
|---|---|
| $F_{t,Ed}$ | Zugkraft |
| $F_{v,Ed}$ | Resultierende der Schraubenscherkräfte Vy und Vz in Scherebenen |
| $F_{b,Rd}$ | Lochleibungstragfähigkeit der Platte nach EN 1993-1-8 Tab. 3.4 |
| $Ut_t$ | Ausnutzung unter Zug |
| $Ut_s$ | Ausnutzung unter Schub |
| $Ut_{ts}$ | Interaktion von Zug und Schub EN_1993-1-8 Tabelle 3.4 |
| $F_{t,Rd}$ | Zugtragfähigkeit der Schraube nach EN 1993-1-8 Tabelle 3.4 |
| $B_{p,Rd}$ | Durchstanztragfähigkeit nach EN 1993-1-8 Tabelle 3.4 |
| $F_{v,Rd}$ | Schertragfähigkeit der Schraube nach EN 1993-1-8 Tabelle 3.4 |

## Schweißnähte

| Position | Kante | $T_w$ [mm] | L [mm] | Lasten | $\sigma_{w,Ed}$ [MPa] | $\varepsilon_{Pl}$ [%] | $\sigma_{\perp}$ [MPa] | $\tau_{\perp}$ [MPa] | $\tau_{\parallel}$ [MPa] | Ut [%] | $Ut_c$ [%] | Konstruktionsregeln | Status |
|---|---|---|---|---|---|---|---|---|---|---|---|---|---|
| Verschobene Stirnplatte1a | 154-tfl 1 | ◢ 4,0 ◣ | 90 | CO11(18) | 46,4 | 0,0 | -23,2 | 19,4 | -12,7 | 10,6 | 6,9 | OK | OK |
| | | ◢ 4,0 ◣ | 90 | CO11(18) | 61,0 | 0,0 | -37,2 | 25,2 | 12,0 | 14,0 | 8,0 | OK | OK |
| Verschobene Stirnplatte1a | 154-bfl 1 | ◢ 4,0 ◣ | 90 | CO11(24) | 30,0 | 0,0 | 17,3 | 8,8 | 11,1 | 6,9 | 6,0 | OK | OK |
| | | ◢ 4,0 ◣ | 90 | CO11(29) | 40,9 | 0,0 | -22,2 | -18,2 | 8,0 | 9,4 | 6,7 | OK | OK |
| Verschobene Stirnplatte1b | 134-bfl 1 | ◢ 4,0 ◣ | 90 | CO11(29) | 16,2 | 0,0 | -7,1 | -7,9 | -2,9 | 3,7 | 3,7 | OK | OK |
| | | ◢ 4,0 ◣ | 90 | CO11(29) | 24,5 | 0,0 | -13,8 | -10,4 | 5,4 | 5,6 | 5,6 | OK | OK |
| Verschobene Stirnplatte1b | 134-tfl 1 | ◢ 4,0 ◣ | 90 | CO11(18) | 30,1 | 0,0 | -18,8 | 12,0 | -6,3 | 6,9 | 6,9 | OK | OK |
| | | ◢ 4,0 ◣ | 90 | CO11(18) | 20,8 | 0,0 | 13,5 | -7,8 | 4,8 | 4,8 | 4,8 | OK | OK |
| Verschobene Stirnplatte1b | 134-w 1 | ◢ 4,0 ◣ | 170 | CO11(18) | 21,6 | 0,0 | 2,1 | 2,3 | -12,2 | 5,0 | 5,0 | OK | OK |
| | | ◢ 4,0 ◣ | 171 | CO11(19) | 12,1 | 0,0 | -2,2 | 1,4 | 6,7 | 2,8 | 2,8 | OK | OK |
| 154-bfl 1 | STEIFF | ◢ 3,0 ◣ | 34 | CO11(15) | 15,6 | 0,0 | -6,2 | -1,7 | 8,1 | 3,6 | 3,6 | OK | OK |
| | | ◢ 3,0 ◣ | 34 | CO11(18) | 21,6 | 0,0 | 4,3 | 0,5 | -12,2 | 5,0 | 5,0 | OK | OK |
| 154-w 1 | STEIFF | ◢ 3,0 ◣ | 145 | CO11(20) | 17,3 | 0,0 | -0,4 | 0,3 | -10,0 | 4,0 | 4,0 | OK | OK |
| | | ◢ 3,0 ◣ | 145 | CO11(19) | 21,7 | 0,0 | 2,1 | -0,8 | 12,4 | 5,0 | 5,0 | OK | OK |
| 154-tfl 1 | STEIFF | ◢ 3,0 ◣ | 34 | CO11(32) | 8,7 | 0,0 | -2,3 | -2,2 | -4,3 | 2,0 | 0,0 | OK | OK |
| | | ◢ 3,0 ◣ | 34 | CO11(26) | 8,9 | 0,0 | -3,2 | 1,2 | -4,7 | 2,0 | 0,0 | OK | OK |
| Verschobene Stirnplatte1a | STEIFF | ◢ 3,0 ◣ | 162 | CO11(18) | 33,1 | 0,0 | 18,2 | 12,9 | 9,4 | 7,6 | 6,9 | **Nicht OK!** | OK |
| | | ◢ 3,0 ◣ | 162 | CO11(18) | 25,1 | 0,0 | 0,8 | -6,8 | 12,8 | 5,8 | 5,8 | **Nicht OK!** | OK |

| Position | Kante | $T_w$ [mm] | L [mm] | Lasten | $\sigma_{w,Ed}$ [MPa] | $\varepsilon_{Pl}$ [%] | $\sigma_{\perp}$ [MPa] | $\tau_{\perp}$ [MPa] | $\tau_{\parallel}$ [MPa] | Ut [%] | $Ut_c$ [%] | Konstruktionsregeln | Status |
|---|---|---|---|---|---|---|---|---|---|---|---|---|---|
| 154-bfl 1 | Rippe1 | ◢ 3,0 ◣ | 34 | CO11(19) | 16,6 | 0,0 | -8,1 | -8,0 | 2,5 | 3,8 | 3,8 | OK | OK |
| | | ◢ 3,0 ◣ | 34 | CO11(20) | 17,7 | 0,0 | -8,7 | 8,1 | -3,7 | 4,1 | 4,1 | OK | OK |
| 154-w 1 | Rippe1 | ◢ 3,0 ◣ | 146 | CO11(13) | 7,4 | 0,0 | 2,9 | 0,3 | -3,9 | 1,7 | 0,0 | OK | OK |
| | | ◢ 3,0 ◣ | 146 | CO11(18) | 11,7 | 0,0 | 0,3 | -2,3 | 6,3 | 2,7 | 2,7 | OK | OK |
| 154-tfl 1 | Rippe1 | ◢ 3,0 ◣ | 34 | CO11(19) | 11,4 | 0,0 | -5,9 | -4,4 | 3,5 | 2,6 | 0,0 | OK | OK |
| | | ◢ 3,0 ◣ | 34 | CO11(18) | 13,3 | 0,0 | -0,1 | 0,9 | -7,6 | 3,0 | 3,0 | OK | OK |
| Stirnblech1 | 215 | ◢ 4,0 | 289 | CO9(27) | 41,8 | 0,0 | -0,1 | -0,1 | 24,2 | 9,6 | 7,0 | OK | OK |

**Bemessungsdaten**

| Material | $f_u$ [MPa] | $\beta_w$ [-] | $\sigma_{w,Rd}$ [MPa] | 0.9 σ [MPa] |
|---|---|---|---|---|
| S 355 | 490,0 | 0,90 | 435,6 | 352,8 |

**Erläuterung von Symbolen**

| | |
|---|---|
| $T_w$ | Nahtdicke a |
| L | Länge |
| $\sigma_{w,Ed}$ | Vergleichsspannung |
| $\varepsilon_{Pl}$ | Dehnung |
| $\sigma_{\perp}$ | Senkrechte Spannung |
| $\tau_{\perp}$ | Scherspannung senkrecht zur Schweißnahtachse |
| $\tau_{\parallel}$ | Scherspannung parallel zur Schweißnahtachse |
| Ut | Ausnutzung |
| $Ut_c$ | Schätzung der Schweißnahtkapazität |
| ◢ | Kehlnaht |
| $f_u$ | Grenzfestigkeit der Schweißnaht |
| $\beta_w$ | Korrelationsfaktor nach EN 1993-1-8 Tab. 4.1 |
| $\sigma_{w,Rd}$ | Tragfähigkeit der Schweißnaht |
| 0.9 σ | Senkrechter Spannungswiderstand - 0.9*fu / γM2 |

## Beulen

**Die Beulanalyse wurde nicht berechnet.**

# Normeinstellungen

| Position | Wert | Einheit | Bezug |
|---|---|---|---|
| Sicherheitsfaktor $\gamma_{M0}$ | 1,00 | - | EN 1993-1-1 – 6.1 |
| Sicherheitsfaktor $\gamma_{M1}$ | 1,00 | - | EN 1993-1-1 – 6.1 |
| Sicherheitsfaktor $\gamma_{M2}$ | 1,25 | - | EN 1993-1-1 – 6.1 |
| Sicherheitsfaktor $\gamma_{M3}$ | 1,25 | - | EN 1993-1-8 – Table 2.1 |
| Sicherheitsfaktor $\gamma_{C}$ | 1,50 | - | EN 1992-1-1 – 2.4.2.4 |
| Sicherheitsfaktor $\gamma_{Inst}$ | 1,20 | - | EN 1992-4 – Table 4.1 |
| Verbindungskoeffizient βj | 0,67 | - | EN 1993-1-8 – 6.2.5(7) |
| Wirksame Fläche - Einfluss der Netzgröße | 0,10 | - | |
| Reibungsbeiwert - Beton | 0,25 | - | EN 1993-1-8 |
| Reibungskoeffizient bei gleitfesten Verbindungen | 0,30 | - | EN 1993-1-8 – Table 3.7 |
| Plastische Dehnung - Grenzwert | 0,05 | - | EN 1993-1-5 |
| Konstruktionsregeln | Ja | | |
| Distance between bolts [d0] | 2,20 | - | EN 1993-1-8 – Table 3.3 |
| Distance between bolts and edge [d0] | 1,20 | - | EN 1993-1-8 – Table 3.3 |
| Nachweis der Tragfähigkeit bei Betonausbruch | Beide | | |
| Berechnetes αb für Lochleibungsnachweis anwenden. | Ja | | EN 1993-1-8 – Table 3.4 |
| Gerissener Beton | Ja | | EN 1992-4 |
| Überprüfen der lokalen Verformung | Ja | | |
| Lokale Verformung - Grenzwert | 0,03 | - | CIDECT DG 1, 3 – 1.1 |
| Geometrische Nichtlinearität (GMNA) | Ja | | Analyse mit großen Verformungen für Verbindungen mit Hohlprofilen |
| Ausgesteiftes System | Nein | | EN 1993-1-8 – 5.2.2.5 |

| | |
|---|---|
| **Projekt:** | **IdeaStatiCa-Stadion_Fazanerija_JK-6_BR - 1127** |
| **Projektnummer:** | **Detajl D4-O6** |
| **Autor:** | **mag. Igor Gorup dipl. ing.** |

## Projektdaten

| | |
|---|---|
| Projektname | IdeaStatiCa-Stadion_Fazanerija_JK-6_BR - 1127 |
| Projektnummer | Detajl D4-O6 |
| Autor | mag. Igor Gorup dipl. ing. |
| Beschreibung | |
| Datum | 18.06.2025 |
| Norm | EN |

## Material

| | |
|---|---|
| Stahl | Baustahl S 355, Baustahl S 235, S 355 |

# Projektposition 1127

## Bemessung

| | |
|---|---|
| Name | 1127 |
| Beschreibung | |
| Berechnung | Spannung, Dehnung/ Lasten im Gleichgewicht |

### Bauteile

#### Geometrie

| Name | Querschnitt | β – Rotation [°] | Y - Rotation [°] | α - Rotation [°] | Abstand ex [mm] | Abstand ey [mm] | Abstand ez [mm] |
|---|---|---|---|---|---|---|---|
| 71 | 18 - IPE200 | -90,0 | 0,8 | -180,0 | -50 | 0 | 0 |
| 282 | 870 - SHS120/120/5.0(RHS120x120) | -90,0 | 90,0 | -90,0 | 0 | 10 | 10 |
| 339 | 6 - IPE200 | 0,0 | 0,0 | 179,2 | 0 | 0 | 0 |
| 490 | 529 - RO76.1X2.9 | 34,8 | -0,5 | -180,0 | 0 | -50 | 0 |

#### Auflager und Kräfte

| Name | Auflager | Kräfte in | X [mm] |
|---|---|---|---|
| 71 / ende | N-Vy-Vz-Mx-My-Mz | Position | 0 |
| 282 / anfang | | Position | 0 |
| 339 / anfang | | Position | 0 |
| 490 / ende | Mx-My-Mz | Position | 0 |

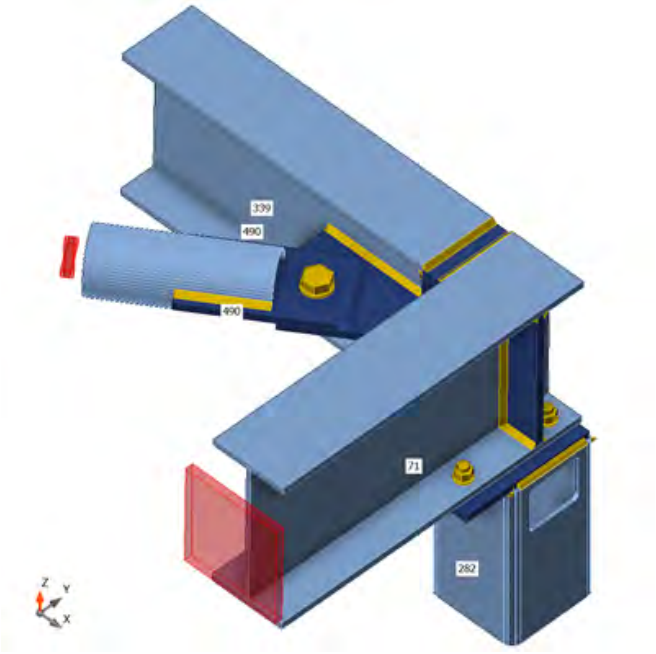

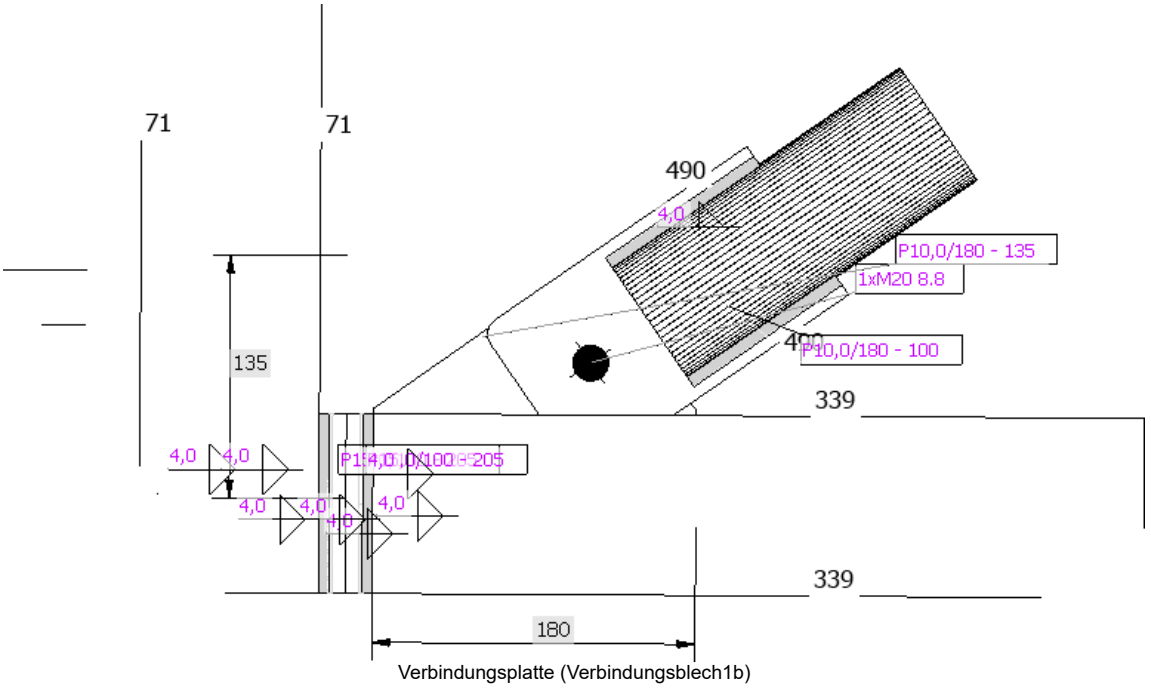


Verbindungsplatte (Verbindungsblech1b)

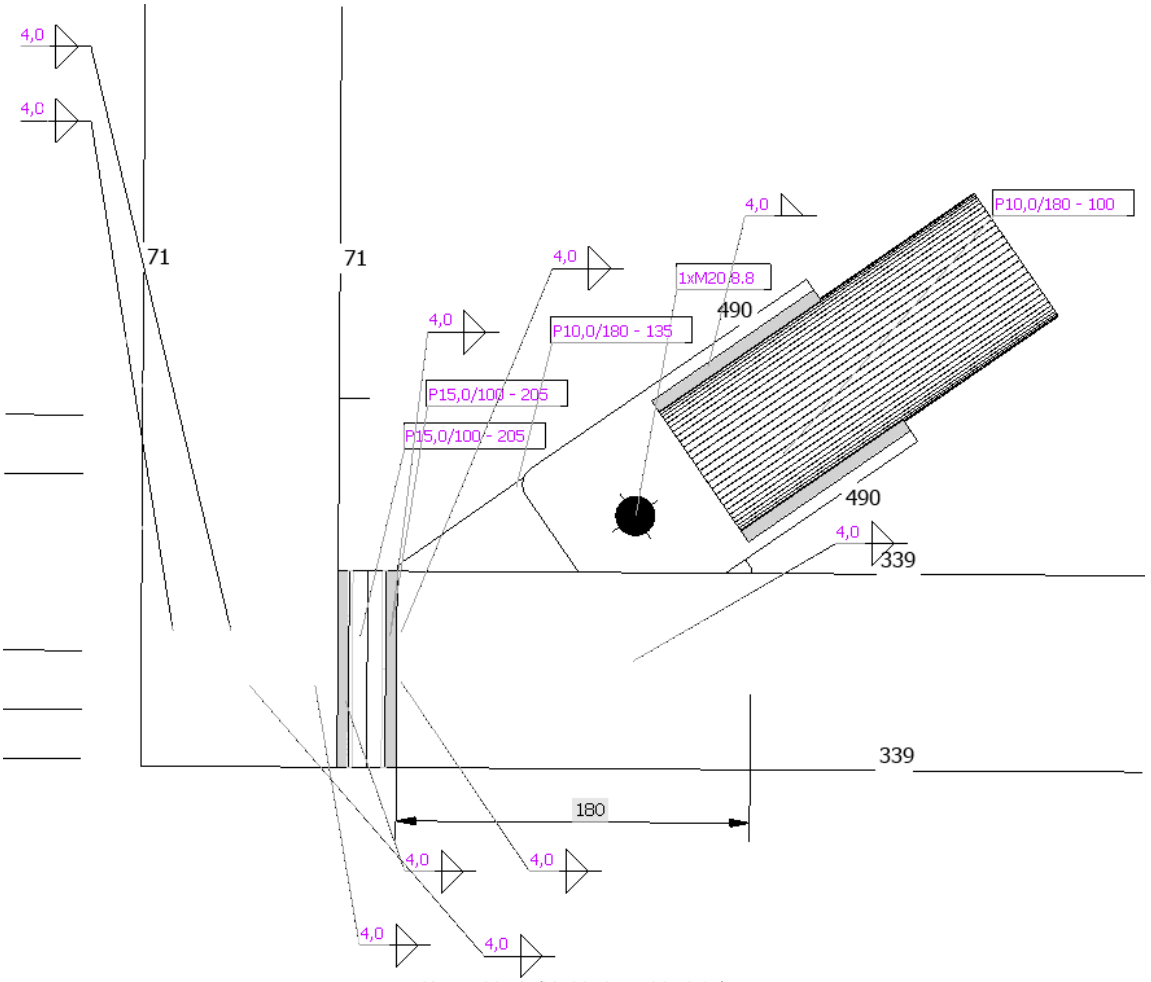


Knotenblech (Verbindungsblech1a)

## Querschnitte

| Name | Material |
|---|---|
| 18 - IPE200 | Baustahl S 355 |
| 870 - SHS120/120/5.0(RHS120x120) | Baustahl S 355 |
| 6 - IPE200 | Baustahl S 355 |
| 529 - RO76.1X2.9 | Baustahl S 355 |

## Schrauben

| Name | Durchmesser [mm] | $f_y$ [MPa] | $f_u$ [MPa] | Bruttofläche [$mm^2$] |
|---|---|---|---|---|
| M12 8.8 | 12 | 640,0 | 800,0 | 113 |
| M20 8.8 | 20 | 640,0 | 800,0 | 314 |

## Lasteinwirkungen (Kräfte im Gleichgewicht)

| Name | Bauteil | N [kN] | Vy [kN] | Vz [kN] | Mx [kNm] | My [kNm] | Mz [kNm] |
|---|---|---|---|---|---|---|---|
| CO11(36) | 71 / Ende | -2,0 | 0,4 | 1,4 | 0,0 | 0,0 | 0,4 |
| | 282 / Anfang | -3,3 | 8,1 | 13,4 | 0,8 | 0,0 | 0,0 |
| | 339 / Anfang | -21,8 | -0,1 | -4,8 | 0,0 | 0,0 | 0,3 |
| | 490 / Anfang | 10,6 | 0,0 | 0,2 | 0,0 | 0,0 | 0,0 |
| CO9(37) | 71 / Ende | -1,7 | 0,6 | -0,1 | 0,0 | 0,0 | 0,4 |
| | 282 / Anfang | 1,4 | 0,2 | -3,8 | 0,3 | 0,0 | 0,0 |
| | 339 / Anfang | 6,4 | 0,0 | 1,5 | 0,0 | 0,0 | -0,1 |
| | 490 / Anfang | -2,8 | 0,0 | 0,0 | 0,0 | 0,0 | 0,0 |
| CO11(38) | 71 / Ende | -0,3 | 0,2 | 1,3 | 0,0 | 0,0 | 0,3 |
| | 282 / Anfang | -2,3 | 5,4 | 9,9 | 0,5 | 0,0 | 0,0 |
| | 339 / Anfang | -16,8 | -0,2 | -3,7 | 0,0 | 0,0 | 0,3 |
| | 490 / Anfang | 8,6 | 0,0 | 0,2 | 0,0 | 0,0 | 0,0 |
| CO11(39) | 71 / Ende | -0,3 | 0,1 | 1,3 | 0,0 | 0,0 | 0,1 |
| | 282 / Anfang | -0,8 | 2,6 | 7,8 | 0,2 | 0,0 | 0,0 |
| | 339 / Anfang | -10,9 | -0,1 | -2,2 | 0,0 | 0,0 | 0,1 |
| | 490 / Anfang | 3,9 | 0,0 | 0,1 | 0,0 | 0,0 | 0,0 |
| CO10(40) | 71 / Ende | -0,2 | 0,1 | 1,2 | 0,0 | 0,0 | 0,1 |
| | 282 / Anfang | -1,1 | 2,5 | 8,5 | 0,3 | 0,0 | 0,0 |
| | 339 / Anfang | -11,4 | -0,1 | -2,5 | 0,0 | 0,0 | 0,1 |
| | 490 / Anfang | 3,8 | 0,0 | 0,1 | 0,0 | 0,0 | 0,0 |
| CO11(41) | 71 / Ende | -0,6 | 0,2 | 2,9 | 0,0 | 0,0 | 0,3 |
| | 282 / Anfang | 0,0 | 6,0 | 13,9 | 0,6 | 0,0 | 0,0 |
| | 339 / Anfang | -21,2 | -0,2 | -3,0 | 0,0 | 0,0 | 0,3 |
| | 490 / Anfang | 9,3 | 0,0 | 0,2 | 0,0 | 0,0 | 0,0 |
| CO11(42) | 71 / Ende | 0,9 | -0,1 | 1,1 | 0,0 | 0,0 | -0,2 |
| | 282 / Anfang | -1,4 | -0,5 | 8,5 | -0,1 | 0,0 | 0,0 |
| | 339 / Anfang | -8,8 | -0,2 | -2,5 | 0,0 | 0,0 | 0,0 |
| | 490 / Anfang | 0,3 | 0,0 | 0,1 | 0,0 | 0,0 | 0,0 |
| CO11(43) | 71 / Ende | -1,8 | 0,3 | 1,4 | 0,0 | 0,0 | 0,4 |
| | 282 / Anfang | -2,1 | 7,2 | 10,5 | 0,7 | 0,0 | 0,0 |
| | 339 / Anfang | -17,9 | -0,1 | -3,7 | 0,0 | 0,0 | 0,3 |
| | 490 / Anfang | 9,3 | 0,0 | 0,2 | 0,0 | 0,0 | 0,0 |
| CO11(23) | 71 / Ende | -2,0 | 0,4 | 2,4 | 0,0 | 0,0 | 0,4 |
| | 282 / Anfang | -1,7 | 7,1 | 15,6 | 0,7 | 0,0 | 0,0 |
| | 339 / Anfang | -22,5 | -0,1 | -4,1 | 0,0 | 0,0 | 0,3 |
| | 490 / Anfang | 8,8 | 0,0 | 0,2 | 0,0 | 0,0 | 0,0 |
| CO11(24) | 71 / Ende | -2,7 | 0,3 | 1,7 | 0,0 | 0,0 | 0,4 |
| | 282 / Anfang | -1,5 | 7,3 | 11,4 | 0,8 | 0,0 | 0,0 |
| | 339 / Anfang | -17,5 | -0,1 | -3,4 | 0,0 | 0,0 | 0,3 |
| | 490 / Anfang | 7,9 | 0,0 | 0,2 | 0,0 | 0,0 | 0,0 |
| CO11(25) | 71 / Ende | 0,9 | -0,1 | 0,5 | 0,0 | 0,0 | -0,2 |
| | 282 / Anfang | -2,6 | -1,6 | 8,3 | -0,2 | 0,0 | 0,0 |
| | 339 / Anfang | -7,2 | -0,2 | -3,1 | 0,0 | 0,0 | 0,0 |
| | 490 / Anfang | -1,5 | 0,0 | 0,1 | 0,0 | 0,0 | 0,0 |
| CO11(26) | 71 / Ende | -2,0 | 0,3 | 3,0 | 0,0 | 0,0 | 0,4 |
| | 282 / Anfang | 0,1 | 7,8 | 14,5 | 0,7 | 0,0 | 0,0 |
| | 339 / Anfang | -22,4 | -0,1 | -3,0 | 0,0 | 0,0 | 0,3 |
| | 490 / Anfang | 10,0 | 0,0 | 0,2 | 0,0 | 0,0 | 0,0 |
| CO11(27) | 71 / Ende | 0,9 | -0,1 | 1,5 | 0,0 | 0,0 | -0,1 |
| | 282 / Anfang | -2,0 | 0,0 | 11,6 | 0,0 | 0,0 | 0,0 |
| | 339 / Anfang | -12,6 | -0,3 | -3,5 | 0,0 | 0,0 | 0,1 |
| | 490 / Anfang | 1,0 | 0,0 | 0,1 | 0,0 | 0,0 | 0,0 |

| Name | Bauteil | N [kN] | Vy [kN] | Vz [kN] | Mx [kNm] | My [kNm] | Mz [kNm] |
|---|---|---|---|---|---|---|---|
| CO11(28) | 71 / Ende | -1,8 | 0,3 | 1,1 | 0,0 | 0,0 | 0,3 |
| | 282 / Anfang | -1,7 | 6,7 | 7,8 | 0,6 | 0,0 | 0,0 |
| | 339 / Anfang | -14,6 | -0,1 | -2,9 | 0,0 | 0,0 | 0,2 |
| | 490 / Anfang | 8,5 | 0,0 | 0,1 | 0,0 | 0,0 | 0,0 |
| CO11(29) | 71 / Ende | -2,7 | 0,3 | 1,9 | 0,0 | 0,0 | 0,4 |
| | 282 / Anfang | -1,1 | 6,1 | 11,8 | 0,7 | 0,0 | 0,0 |
| | 339 / Anfang | -16,4 | 0,0 | -3,1 | 0,0 | 0,0 | 0,3 |
| | 490 / Anfang | 5,9 | 0,0 | 0,2 | 0,0 | 0,0 | 0,0 |
| CO11(30) | 71 / Ende | -2,7 | 0,3 | 1,5 | 0,0 | 0,0 | 0,4 |
| | 282 / Anfang | -0,5 | 5,6 | 8,8 | 0,5 | 0,0 | 0,0 |
| | 339 / Anfang | -12,8 | 0,0 | -2,2 | 0,0 | 0,0 | 0,2 |
| | 490 / Anfang | 5,2 | 0,0 | 0,1 | 0,0 | 0,0 | 0,0 |
| CO11(31) | 71 / Ende | 0,2 | 0,1 | 1,0 | 0,0 | 0,0 | 0,1 |
| | 282 / Anfang | -4,6 | 2,9 | 14,7 | 0,2 | 0,0 | 0,0 |
| | 339 / Anfang | -18,7 | -0,2 | -5,5 | 0,0 | 0,0 | 0,2 |
| | 490 / Anfang | 5,0 | 0,0 | 0,2 | 0,0 | 0,0 | 0,0 |
| CO11(32) | 71 / Ende | 0,9 | -0,1 | 0,8 | 0,0 | 0,0 | -0,1 |
| | 282 / Anfang | -3,2 | -1,1 | 11,6 | -0,1 | 0,0 | 0,0 |
| | 339 / Anfang | -11,1 | -0,2 | -4,1 | 0,0 | 0,0 | 0,1 |
| | 490 / Anfang | -0,7 | 0,0 | 0,1 | 0,0 | 0,0 | 0,0 |
| CO11(33) | 71 / Ende | -3,0 | 0,4 | 2,5 | 0,0 | 0,0 | 0,5 |
| | 282 / Anfang | -1,0 | 8,1 | 14,7 | 0,8 | 0,0 | 0,0 |
| | 339 / Anfang | -21,6 | 0,0 | -3,5 | 0,0 | 0,0 | 0,3 |
| | 490 / Anfang | 8,9 | 0,0 | 0,2 | 0,0 | 0,0 | 0,0 |
| CO11(34) | 71 / Ende | 0,6 | -0,1 | 0,4 | 0,0 | 0,0 | 0,0 |
| | 282 / Anfang | -1,8 | 1,6 | 4,7 | 0,1 | 0,0 | 0,0 |
| | 339 / Anfang | -7,6 | -0,2 | -2,4 | 0,0 | 0,0 | 0,2 |
| | 490 / Anfang | 3,4 | 0,0 | 0,1 | 0,0 | 0,0 | 0,0 |
| CO11(12) | 71 / Ende | -1,6 | 0,2 | 2,7 | 0,0 | 0,0 | 0,3 |
| | 282 / Anfang | 2,8 | 5,4 | 6,2 | 0,5 | 0,0 | 0,0 |
| | 339 / Anfang | -11,4 | -0,1 | 0,0 | 0,0 | 0,0 | 0,3 |
| | 490 / Anfang | 6,6 | 0,0 | 0,1 | 0,0 | 0,0 | 0,0 |
| CO11(13) | 71 / Ende | 0,7 | 0,0 | 0,7 | 0,0 | 0,0 | -0,1 |
| | 282 / Anfang | -4,7 | 1,0 | 13,4 | 0,0 | 0,0 | 0,0 |
| | 339 / Anfang | -15,6 | -0,3 | -5,3 | 0,0 | 0,0 | 0,1 |
| | 490 / Anfang | 2,5 | 0,0 | 0,1 | 0,0 | 0,0 | 0,0 |
| CO11(14) | 71 / Ende | 1,1 | -0,2 | 0,5 | 0,0 | 0,0 | -0,2 |
| | 282 / Anfang | -1,7 | -2,4 | 6,0 | -0,2 | 0,0 | 0,0 |
| | 339 / Anfang | -4,0 | -0,2 | -2,2 | 0,0 | 0,0 | 0,0 |
| | 490 / Anfang | -2,7 | 0,0 | 0,1 | 0,0 | 0,0 | 0,0 |
| CO11(15) | 71 / Ende | -2,9 | 0,4 | 1,7 | 0,0 | 0,0 | 0,5 |
| | 282 / Anfang | -2,6 | 8,2 | 14,1 | 0,8 | 0,0 | 0,0 |
| | 339 / Anfang | -21,3 | 0,0 | -4,4 | 0,0 | 0,0 | 0,3 |
| | 490 / Anfang | 9,2 | 0,0 | 0,2 | 0,0 | 0,0 | 0,0 |
| CO11(18) | 71 / Ende | -1,8 | 0,3 | 1,8 | 0,0 | 0,0 | 0,3 |
| | 282 / Anfang | -1,8 | 5,2 | 12,9 | 0,6 | 0,0 | 0,0 |
| | 339 / Anfang | -17,4 | -0,1 | -3,7 | 0,0 | 0,0 | 0,2 |
| | 490 / Anfang | 5,8 | 0,0 | 0,2 | 0,0 | 0,0 | 0,0 |
| CO11(4) | 71 / Ende | -1,9 | 0,3 | 3,1 | 0,0 | 0,0 | 0,4 |
| | 282 / Anfang | 1,5 | 7,1 | 11,3 | 0,7 | 0,0 | 0,0 |
| | 339 / Anfang | -18,5 | -0,1 | -1,7 | 0,0 | 0,0 | 0,3 |
| | 490 / Anfang | 9,0 | 0,0 | 0,2 | 0,0 | 0,0 | 0,0 |
| CO11(5) | 71 / Ende | 0,2 | 0,1 | 1,8 | 0,0 | 0,0 | 0,1 |
| | 282 / Anfang | -2,9 | 2,7 | 15,2 | 0,2 | 0,0 | 0,0 |

| Name | Bauteil | N [kN] | Vy [kN] | Vz [kN] | Mx [kNm] | My [kNm] | Mz [kNm] |
|---|---|---|---|---|---|---|---|
| | 339 / Anfang | -19,1 | -0,2 | -4,6 | 0,0 | 0,0 | 0,2 |
| | 490 / Anfang | 4,8 | 0,0 | 0,2 | 0,0 | 0,0 | 0,0 |
| CO11(6) | 71 / Ende | 0,4 | 0,0 | 0,8 | 0,0 | 0,0 | 0,1 |
| | 282 / Anfang | -3,4 | 2,9 | 10,3 | 0,3 | 0,0 | 0,0 |
| | 339 / Anfang | -14,7 | -0,2 | -4,3 | 0,0 | 0,0 | 0,2 |
| | 490 / Anfang | 5,4 | 0,0 | 0,2 | 0,0 | 0,0 | 0,0 |
| CO11(7) | 71 / Ende | -2,8 | 0,3 | 2,1 | 0,0 | 0,0 | 0,4 |
| | 282 / Anfang | 0,6 | 6,6 | 9,1 | 0,6 | 0,0 | 0,0 |
| | 339 / Anfang | -14,4 | 0,0 | -1,6 | 0,0 | 0,0 | 0,2 |
| | 490 / Anfang | 6,8 | 0,0 | 0,1 | 0,0 | 0,0 | 0,0 |
| CO11(9) | 71 / Ende | 1,0 | -0,1 | 0,2 | 0,0 | 0,0 | -0,1 |
| | 282 / Anfang | -3,6 | -0,6 | 8,7 | -0,1 | 0,0 | 0,0 |
| | 339 / Anfang | -9,0 | -0,3 | -3,8 | 0,0 | 0,0 | 0,1 |
| | 490 / Anfang | 0,1 | 0,0 | 0,1 | 0,0 | 0,0 | 0,0 |
| CO11(10) | 71 / Ende | -1,8 | 0,3 | 3,0 | 0,0 | 0,0 | 0,4 |
| | 282 / Anfang | 1,3 | 6,9 | 11,7 | 0,7 | 0,0 | 0,0 |
| | 339 / Anfang | -18,5 | -0,1 | -1,9 | 0,0 | 0,0 | 0,3 |
| | 490 / Anfang | 8,7 | 0,0 | 0,2 | 0,0 | 0,0 | 0,0 |
| CO11(11) | 71 / Ende | -1,7 | 0,2 | 3,1 | 0,0 | 0,0 | 0,3 |
| | 282 / Anfang | 2,7 | 6,2 | 8,5 | 0,6 | 0,0 | 0,0 |
| | 339 / Anfang | -14,6 | -0,1 | -0,6 | 0,0 | 0,0 | 0,3 |
| | 490 / Anfang | 7,7 | 0,0 | 0,2 | 0,0 | 0,0 | 0,0 |

### Fehlende Lasten

| Name | X [kN] | Y [kN] | Z [kN] | Mx [kNm] | My [kNm] | Mz [kNm] |
|---|---|---|---|---|---|---|
| CO11(36) | 0,0 | 0,1 | -0,2 | -0,1 | 0,0 | -0,5 |
| CO9(37) | -0,3 | -0,1 | 0,0 | 0,0 | 0,0 | 0,1 |
| CO11(38) | 0,0 | 0,0 | -0,1 | -0,1 | 0,0 | -0,4 |
| CO11(39) | 0,0 | 0,0 | -0,1 | -0,1 | 0,0 | -0,1 |
| CO10(40) | 0,0 | 0,0 | 0,0 | -0,1 | 0,0 | -0,1 |
| CO11(41) | 0,0 | 0,0 | -0,2 | -0,2 | 0,0 | -0,4 |
| CO11(42) | 0,0 | 0,0 | -0,1 | -0,1 | 0,0 | 0,1 |
| CO11(43) | 0,0 | 0,0 | -0,1 | -0,1 | 0,0 | -0,4 |
| CO11(23) | 0,0 | 0,1 | -0,2 | -0,1 | 0,0 | -0,3 |
| CO11(24) | 0,0 | 0,0 | -0,1 | -0,1 | 0,0 | -0,3 |
| CO11(25) | 0,0 | 0,0 | 0,0 | 0,0 | 0,0 | 0,2 |
| CO11(26) | 0,0 | 0,0 | -0,2 | -0,2 | 0,0 | -0,4 |
| CO11(27) | 0,0 | 0,0 | -0,1 | -0,1 | 0,0 | 0,1 |
| CO11(28) | 0,0 | 0,0 | -0,1 | -0,1 | 0,0 | -0,4 |
| CO11(29) | 0,0 | 0,0 | -0,1 | -0,1 | 0,0 | -0,2 |
| CO11(30) | 0,0 | 0,0 | -0,1 | -0,1 | 0,0 | -0,2 |
| CO11(31) | 0,0 | 0,0 | -0,2 | 0,0 | 0,0 | -0,1 |
| CO11(32) | 0,0 | 0,0 | -0,1 | 0,0 | 0,0 | 0,2 |
| CO11(33) | 0,0 | 0,0 | -0,2 | -0,1 | 0,0 | -0,4 |
| CO11(34) | 0,0 | 0,0 | 0,0 | 0,0 | 0,0 | -0,1 |
| CO11(12) | 0,0 | 0,0 | -0,1 | -0,2 | 0,0 | -0,3 |
| CO11(13) | 0,0 | 0,0 | -0,1 | 0,0 | 0,0 | 0,0 |
| CO11(14) | 0,0 | 0,0 | 0,0 | 0,0 | 0,0 | 0,2 |
| CO11(15) | 0,0 | 0,1 | -0,2 | -0,1 | 0,0 | -0,4 |
| CO11(18) | 0,0 | 0,0 | -0,1 | -0,1 | 0,0 | -0,2 |
| CO11(4) | 0,0 | 0,0 | -0,1 | -0,2 | 0,0 | -0,4 |
| CO11(5) | 0,0 | 0,0 | -0,2 | -0,1 | 0,0 | -0,1 |
| CO11(6) | 0,0 | 0,0 | -0,1 | -0,1 | 0,0 | -0,2 |
| CO11(7) | 0,0 | 0,0 | -0,1 | -0,1 | 0,0 | -0,3 |
| CO11(9) | 0,0 | 0,0 | -0,1 | 0,0 | 0,0 | 0,1 |
| CO11(10) | 0,0 | 0,0 | -0,1 | -0,2 | 0,0 | -0,4 |
| CO11(11) | 0,0 | 0,0 | -0,1 | -0,2 | 0,0 | -0,4 |

## Nachweis

### Übersicht

| Name | Wert | Nachweisstatus |
|---|---|---|
| Berechnung | 100,0% | OK |
| Platten | 0,0 < 5,0% | OK |
| Lokale Verformung | 0,0 < 3% | OK |
| Schrauben | 35,9 < 100% | OK |
| Schweißnähte | 98,2 < 100% | OK |
| Beulen | Nicht berechnet | |

## Platten

| Name | Material | $t_p$ [mm] | Lasten | $\sigma_{Ed}$ [MPa] | $\varepsilon_{Pl}$ [%] | $\sigma_{c,Ed}$ [MPa] | Status |
|---|---|---|---|---|---|---|---|
| 71-bfl 1 | Baustahl S 355 | 8,5 | CO11(36) | 25,6 | 0,0 | 0,0 | OK |
| 71-tfl 1 | Baustahl S 355 | 8,5 | CO11(31) | 240,2 | 0,0 | 43,1 | OK |
| 71-w 1 | Baustahl S 355 | 5,6 | CO11(31) | 123,6 | 0,0 | 0,0 | OK |
| 282 | Baustahl S 355 | 5,0 | CO11(13) | 152,6 | 0,0 | 0,0 | OK |
| 339-bfl 1 | Baustahl S 355 | 8,5 | CO11(36) | 34,8 | 0,0 | 0,0 | OK |
| 339-tfl 1 | Baustahl S 355 | 8,5 | CO11(26) | 20,0 | 0,0 | 0,0 | OK |
| 339-w 1 | Baustahl S 355 | 5,6 | CO11(36) | 26,4 | 0,0 | 0,0 | OK |
| 490 | Baustahl S 355 | 2,9 | CO11(36) | 58,2 | 0,0 | 0,0 | OK |
| Verschobene Stirnplatte1a | S 355 | 15,0 | CO11(5) | 57,4 | 0,0 | 4,9 | OK |
| Verschobene Stirnplatte1b | S 355 | 15,0 | CO11(36) | 52,1 | 0,0 | 9,4 | OK |
| STEIFF | S 355 | 10,0 | CO11(23) | 54,8 | 0,0 | 0,0 | OK |
| Stirnblech1 | S 355 | 10,0 | CO11(31) | 239,5 | 0,0 | 102,3 | OK |
| Rippe1 | S 355 | 10,0 | CO11(31) | 94,5 | 0,0 | 0,0 | OK |
| Verbindungsblech1a | S 355 | 10,0 | CO11(36) | 52,2 | 0,0 | 4,4 | OK |
| Verbindungsblech1b | S 355 | 10,0 | CO11(36) | 50,8 | 0,0 | 4,0 | OK |

**Bemessungsdaten**

| Material | $f_y$ [MPa] | $\varepsilon_{lim}$ [%] |
|---|---|---|
| Baustahl S 355 | 355,0 | 5,0 |
| S 355 | 355,0 | 5,0 |

**Erläuterung von Symbolen**

| | |
|---|---|
| $t_p$ | Plattendicke |
| $\sigma_{Ed}$ | Vergleichsspannung |
| $\varepsilon_{Pl}$ | Plastische Dehnung |
| $\sigma_{c,Ed}$ | Kontaktspannung |
| $f_y$ | Streckgrenze |
| $\varepsilon_{lim}$ | Grenzwert plastische Dehnung |

## Lokale Verformung

| Name | $d_0$ [mm] | Lasten | $\delta$ [mm] | $\delta_{lim}$ [mm] | $\delta/d_0$ [%] | Nachweisstatus |
|---|---|---|---|---|---|---|
| 282 | 120 | CO11(11) | 0 | 4 | 0,0 | OK |
| 490 | 76 | CO11(11) | 0 | 2 | 0,0 | OK |

**Erläuterung von Symbolen**

| | |
|---|---|
| $d_0$ | Querschnittsgröße |
| $\delta$ | Lokale Verformung im Querschnitt |
| $\delta_{lim}$ | Zulässige Verformung |

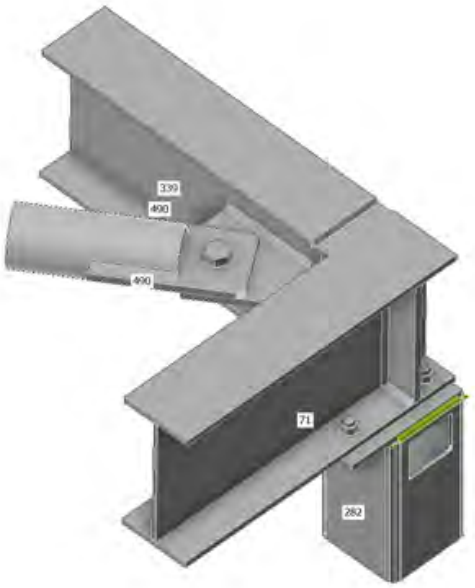


*Gesamt, CO11(36)*

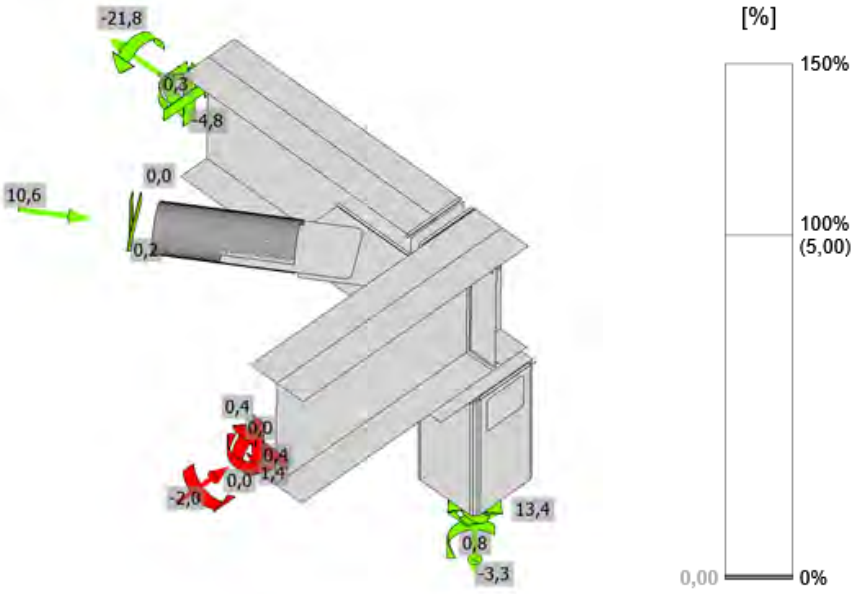


*Dehnung, CO11(36)*

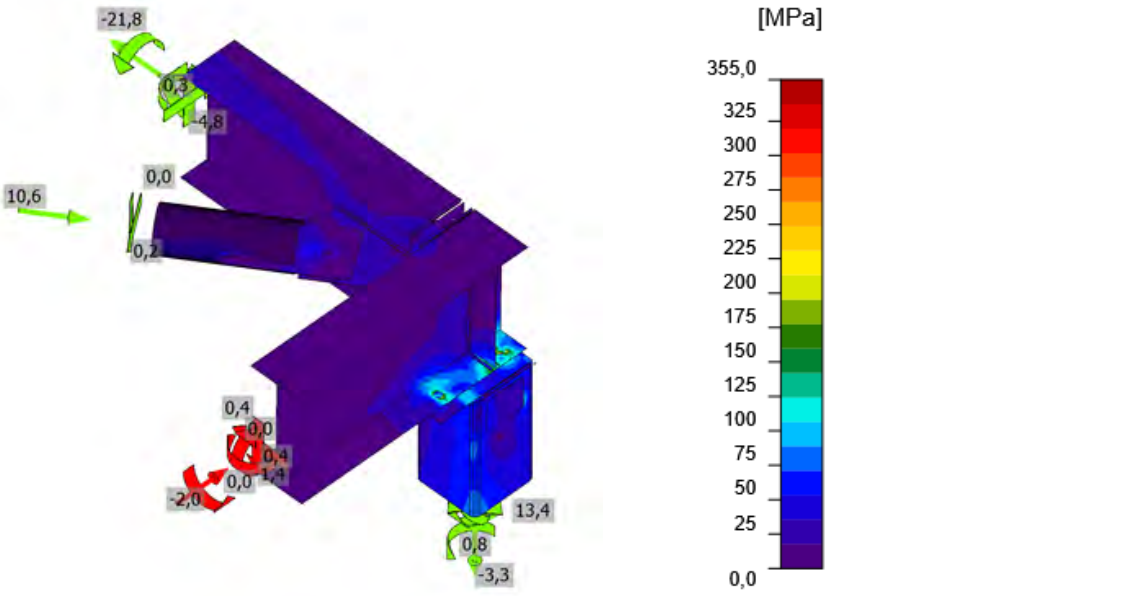


*Vergleichsspannung, CO11(36)*

## Schrauben

| Form | Position | Klasse | Lasten | $F_{t,Ed}$ [kN] | $F_{v,Ed}$ [kN] | $F_{b,Rd}$ [kN] | $Ut_t$ [%] | $Ut_s$ [%] | $Ut_{ts}$ [%] | Konstruktionsregeln | Status |
|---|---|---|---|---|---|---|---|---|---|---|---|
| 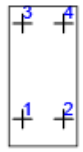 | B1 | M12 8.8 - 1 | CO11(36) | 6,0 | 2,1 | 90,8 | 12,4 | 6,5 | 15,3 | OK | OK |
| | B2 | M12 8.8 - 1 | CO11(36) | 0,7 | 2,0 | 90,5 | 1,5 | 6,1 | 7,1 | OK | OK |
| | B3 | M12 8.8 - 1 | CO11(36) | 6,9 | 1,8 | 92,1 | 14,3 | 5,5 | 15,7 | OK | OK |
| | B4 | M12 8.8 - 1 | CO11(31) | 4,1 | 1,6 | 110,1 | 8,5 | 5,0 | 11,0 | OK | OK |
| 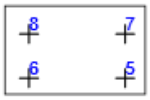 | B5 | M12 8.8 - 2 | CO11(5) | 6,9 | 4,3 | 60,3 | 14,3 | 13,4 | 23,6 | OK | OK |
| | B6 | M12 8.8 - 2 | CO11(15) | 5,9 | 5,0 | 60,3 | 12,2 | 15,6 | 24,3 | OK | OK |
| | B7 | M12 8.8 - 2 | CO11(5) | 14,0 | 5,0 | 51,3 | 28,7 | 15,3 | 35,9 | OK | OK |
| | B8 | M12 8.8 - 2 | CO11(15) | 10,0 | 5,0 | 51,3 | 20,5 | 15,5 | 30,2 | OK | OK |
| 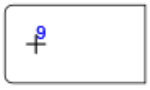 | B9 | M20 8.8 - 3 | CO11(36) | 1,6 | 10,6 | 196,0 | 1,2 | 11,3 | 12,1 | OK | OK |

**Bemessungsdaten**

| Klasse | $F_{t,Rd}$ [kN] | $B_{p,Rd}$ [kN] | $F_{v,Rd}$ [kN] |
|---|---|---|---|
| M12 8.8 - 1 | 48,6 | 210,8 | 32,4 |
| M12 8.8 - 2 | 48,6 | 119,4 | 32,4 |
| M20 8.8 - 3 | 141,1 | 234,7 | 94,1 |

**Erläuterung von Symbolen**

| | |
|---|---|
| $F_{t,Ed}$ | Zugkraft |
| $F_{v,Ed}$ | Resultierende der Schraubenscherkräfte Vy und Vz in Scherebenen |
| $F_{b,Rd}$ | Lochleibungstragfähigkeit der Platte nach EN 1993-1-8 Tab. 3.4 |
| $Ut_t$ | Ausnutzung unter Zug |
| $Ut_s$ | Ausnutzung unter Schub |
| $Ut_{ts}$ | Interaktion von Zug und Schub EN_1993-1-8 Tabelle 3.4 |
| $F_{t,Rd}$ | Zugtragfähigkeit der Schraube nach EN 1993-1-8 Tabelle 3.4 |
| $B_{p,Rd}$ | Durchstanztragfähigkeit nach EN 1993-1-8 Tabelle 3.4 |
| $F_{v,Rd}$ | Schertragfähigkeit der Schraube nach EN 1993-1-8 Tabelle 3.4 |

## Schweißnähte

| Position | Kante | $T_w$ [mm] | L [mm] | Lasten | $\sigma_{w,Ed}$ [MPa] | $\varepsilon_{Pl}$ [%] | $\sigma_{\perp}$ [MPa] | $\tau_{\perp}$ [MPa] | $\tau_{\parallel}$ [MPa] | Ut [%] | $Ut_c$ [%] | Konstruktionsregeln | Status |
|---|---|---|---|---|---|---|---|---|---|---|---|---|---|
| Verschobene Stirnplatte1a | 71-tfl 1 | ◢ 4,0 ◣ | 100 | CO11(32) | 70,4 | 0,0 | 22,2 | 29,9 | 24,3 | 16,2 | 9,2 | OK | OK |
| | | ◢ 4,0 ◣ | 100 | CO11(26) | 117,5 | 0,0 | 56,1 | 55,0 | -22,9 | 27,0 | 15,8 | OK | OK |
| Verschobene Stirnplatte1a | 71-bfl 1 | ◢ 4,0 ◣ | 100 | CO11(41) | 37,2 | 0,0 | 20,6 | 17,8 | 1,1 | 8,5 | 6,9 | OK | OK |
| | | ◢ 4,0 ◣ | 100 | CO11(36) | 36,9 | 0,0 | 13,9 | 15,6 | 12,1 | 8,5 | 7,0 | OK | OK |
| Verschobene Stirnplatte1b | 339-bfl 1 | ◢ 4,0 ◣ | 99 | CO11(36) | 25,6 | 0,0 | 17,3 | 9,7 | -4,9 | 5,9 | 5,8 | OK | OK |
| | | ◢ 4,0 ◣ | 99 | CO11(36) | 18,9 | 0,0 | 5,0 | 3,1 | -10,1 | 4,3 | 4,3 | OK | OK |
| Verschobene Stirnplatte1b | 339-tfl 1 | ◢ 4,0 ◣ | 100 | CO11(43) | 24,7 | 0,0 | -9,2 | -11,0 | -7,4 | 5,7 | 5,7 | OK | OK |
| | | ◢ 4,0 ◣ | 100 | CO11(43) | 25,6 | 0,0 | -10,7 | 9,0 | 10,0 | 5,9 | 5,9 | OK | OK |
| Verschobene Stirnplatte1b | 339-w 1 | ◢ 4,0 ◣ | 189 | CO11(36) | 25,8 | 0,0 | 12,6 | 9,6 | 8,8 | 5,9 | 5,9 | OK | OK |
| | | ◢ 4,0 ◣ | 189 | CO11(31) | 21,8 | 0,0 | 9,5 | -11,1 | -2,2 | 5,0 | 5,0 | OK | OK |
| 71-bfl 1 | STEIFF | ◢ 4,0 ◣ | 35 | CO11(23) | 18,4 | 0,0 | -6,9 | -2,9 | -9,4 | 4,2 | 4,2 | OK | OK |
| | | ◢ 4,0 ◣ | 35 | CO11(5) | 12,5 | 0,0 | 0,6 | 2,0 | 6,9 | 2,9 | 2,9 | OK | OK |
| 71-w 1 | STEIFF | ◢ 4,0 ◣ | 159 | CO11(23) | 83,7 | 0,0 | 8,5 | 13,5 | 46,1 | 19,2 | 13,1 | OK | OK |
| | | ◢ 4,0 ◣ | 159 | CO11(5) | 86,5 | 0,0 | 15,4 | -11,1 | -47,9 | 19,9 | 12,7 | OK | OK |
| 71-tfl 1 | STEIFF | ◢ 4,0 ◣ | 35 | CO11(23) | 74,1 | 0,0 | -33,9 | -33,3 | -18,4 | 17,0 | 14,6 | OK | OK |
| | | ◢ 4,0 ◣ | 35 | CO11(23) | 85,6 | 0,0 | -38,5 | 39,0 | 20,6 | 19,7 | 16,3 | OK | OK |
| Verschobene Stirnplatte1a | STEIFF | ◢ 4,0 ◣ | 181 | CO11(23) | 48,3 | 0,0 | 20,4 | 18,5 | 17,2 | 11,1 | 7,9 | OK | OK |
| | | ◢ 4,0 ◣ | 181 | CO11(31) | 35,3 | 0,0 | 10,6 | -12,7 | -14,8 | 8,1 | 6,6 | OK | OK |
| Verschobene Stirnplatte1b | Verbindungsblech1a | ◢ 4,0 ◣ | 47 | CO11(36) | 20,1 | 0,0 | 0,5 | 2,3 | 11,4 | 4,6 | 4,6 | OK | OK |
| | | ◢ 4,0 ◣ | 47 | CO11(36) | 29,5 | 0,0 | 6,5 | -4,8 | -15,9 | 6,8 | 6,8 | OK | OK |
| 71-bfl 1 | Rippe1 | ◢ 4,0 ◣ | 47 | CO9(37) | 6,4 | 0,0 | -0,5 | -0,7 | -3,6 | 1,5 | 0,0 | OK | OK |

| Position | Kante | $T_w$ [mm] | L [mm] | Lasten | $\sigma_{w,Ed}$ [MPa] | $\varepsilon_{Pl}$ [%] | $\sigma_{\perp}$ [MPa] | $\tau_{\perp}$ [MPa] | $\tau_{\parallel}$ [MPa] | Ut [%] | $Ut_c$ [%] | Konstruktionsregeln | Status |
|---|---|---|---|---|---|---|---|---|---|---|---|---|---|
| | | ◢ 4,0 ◣ | 47 | CO11(23) | 4,5 | 0,0 | 3,1 | -1,6 | -1,0 | 1,0 | 0,0 | OK | OK |
| 71-w 1 | Rippe1 | ◢ 4,0 ◣ | 182 | CO11(5) | 44,5 | 0,0 | 0,7 | 14,0 | -21,6 | 10,2 | 7,6 | OK | OK |
| | | ◢ 4,0 ◣ | 182 | CO11(5) | 35,6 | 0,0 | 9,7 | 3,6 | 19,4 | 8,2 | 7,3 | OK | OK |
| 71-tfl 1 | Rippe1 | ◢ 4,0 ◣ | 47 | CO11(31) | 108,4 | 0,0 | 65,3 | 38,8 | 31,4 | 24,9 | 20,3 | OK | OK |
| | | ◢ 4,0 ◣ | 47 | CO9(37) | 76,7 | 0,0 | -33,0 | 31,7 | 24,3 | 17,6 | 11,3 | OK | OK |
| 339-w 1 | Verbindungsblech1a | ◢ 4,0 ◣ | 179 | CO11(36) | 26,8 | 0,0 | -2,9 | -5,8 | -14,3 | 6,2 | 6,2 | OK | OK |
| | | ◢ 4,0 ◣ | 179 | CO11(36) | 26,2 | 0,0 | -6,3 | 3,4 | 14,3 | 6,0 | 6,0 | OK | OK |
| Verbindungsblech1b | 490-arc 2 | ◢ 4,0 | 99 | CO11(36) | 37,6 | 0,0 | 7,6 | -2,4 | -21,1 | 8,6 | 7,5 | OK | OK |
| Verbindungsblech1b | 490-arc 31 | ◢ 4,0 | 99 | CO11(36) | 38,7 | 0,0 | 6,8 | -2,0 | 21,9 | 8,9 | 7,3 | OK | OK |
| Verbindungsblech1b | 490-arc 34 | ◢ 4,0 | 99 | CO11(36) | 38,6 | 0,0 | 6,8 | -1,6 | -21,9 | 8,9 | 7,2 | OK | OK |
| Verbindungsblech1b | 490-arc 63 | ◢ 4,0 | 99 | CO11(36) | 39,5 | 0,0 | 6,0 | -1,3 | 22,5 | 9,1 | 6,4 | OK | OK |
| Stirnblech1 | 282 | ◢ 4,0 | 398 | CO11(13) | 427,5 | 0,4 | -131,4 | -107,7 | 208,8 | 98,2 | 68,7 | OK | OK |

**Bemessungsdaten**

| Material | $f_u$ [MPa] | $\beta_w$ [-] | $\sigma_{w,Rd}$ [MPa] | 0.9 σ [MPa] |
|---|---|---|---|---|
| S 355 | 490,0 | 0,90 | 435,6 | 352,8 |

**Erläuterung von Symbolen**

| | |
|---|---|
| $T_w$ | Nahtdicke a |
| L | Länge |
| $\sigma_{w,Ed}$ | Vergleichsspannung |
| $\varepsilon_{Pl}$ | Dehnung |
| $\sigma_{\perp}$ | Senkrechte Spannung |
| $\tau_{\perp}$ | Scherspannung senkrecht zur Schweißnahtachse |
| $\tau_{\parallel}$ | Scherspannung parallel zur Schweißnahtachse |
| Ut | Ausnutzung |
| $Ut_c$ | Schätzung der Schweißnahtkapazität |
| ◢ | Kehlnaht |
| $f_u$ | Grenzfestigkeit der Schweißnaht |
| $\beta_w$ | Korrelationsfaktor nach EN 1993-1-8 Tab. 4.1 |
| $\sigma_{w,Rd}$ | Tragfähigkeit der Schweißnaht |
| 0.9 σ | Senkrechter Spannungswiderstand - 0.9*fu / γM2 |

## Beulen

**Die Beulanalyse wurde nicht berechnet.**

## Normeinstellungen

| Position | Wert | Einheit | Bezug |
|---|---|---|---|
| Sicherheitsfaktor $\gamma_{M0}$ | 1,00 | - | EN 1993-1-1 – 6.1 |
| Sicherheitsfaktor $\gamma_{M1}$ | 1,00 | - | EN 1993-1-1 – 6.1 |
| Sicherheitsfaktor $\gamma_{M2}$ | 1,25 | - | EN 1993-1-1 – 6.1 |
| Sicherheitsfaktor $\gamma_{M3}$ | 1,25 | - | EN 1993-1-8 – Table 2.1 |
| Sicherheitsfaktor $\gamma_C$ | 1,50 | - | EN 1992-1-1 – 2.4.2.4 |
| Sicherheitsfaktor $\gamma_{Inst}$ | 1,20 | - | EN 1992-4 – Table 4.1 |
| Verbindungskoeffizient βj | 0,67 | - | EN 1993-1-8 – 6.2.5(7) |
| Wirksame Fläche - Einfluss der Netzgröße | 0,10 | - | |
| Reibungsbeiwert - Beton | 0,25 | - | EN 1993-1-8 |
| Reibungskoeffizient bei gleitfesten Verbindungen | 0,30 | - | EN 1993-1-8 – Table 3.7 |
| Plastische Dehnung - Grenzwert | 0,05 | - | EN 1993-1-5 |
| Konstruktionsregeln | Ja | | |
| Distance between bolts [d0] | 2,20 | - | EN 1993-1-8 – Table 3.3 |
| Distance between bolts and edge [d0] | 1,20 | - | EN 1993-1-8 – Table 3.3 |
| Nachweis der Tragfähigkeit bei Betonausbruch | Beide | | |
| Berechnetes αb für Lochleibungsnachweis anwenden. | Ja | | EN 1993-1-8 – Table 3.4 |
| Gerissener Beton | Ja | | EN 1992-4 |
| Überprüfen der lokalen Verformung | Ja | | |
| Lokale Verformung - Grenzwert | 0,03 | - | CIDECT DG 1, 3 – 1.1 |
| Geometrische Nichtlinearität (GMNA) | Ja | | Analyse mit großen Verformungen für Verbindungen mit Hohlprofilen |
| Ausgesteiftes System | Nein | | EN 1993-1-8 – 5.2.2.5 |

| | |
|---|---|
| **Projekt:** | **IdeaStatiCa-Stadion_Fazanerija_JK-6_BR - 37** |
| **Projektnummer:** | **Detajl D5-O6** |
| **Autor:** | **mag. Igor Gorup dipl. ing.** |

## Projektdaten

| | |
|---|---|
| Projektname | IdeaStatiCa-Stadion_Fazanerija_JK-6_BR - 37 |
| Projektnummer | Detajl D5-O6 |
| Autor | mag. Igor Gorup dipl. ing. |
| Beschreibung | |
| Datum | 18.06.2025 |
| Norm | EN |

## Material

| | |
|---|---|
| Stahl | Baustahl S 355, Baustahl S 235, S 355 |

# Projektposition 37

## Bemessung

| | |
|---|---|
| Name | 37 |
| Beschreibung | |
| Berechnung | Spannung, Dehnung/ Lasten im Gleichgewicht |

### Bauteile

#### Geometrie

| Name | Querschnitt | β – Rotation [°] | Y - Rotation [°] | α - Rotation [°] | Abstand ex [mm] | Abstand ey [mm] | Abstand ez [mm] |
|---|---|---|---|---|---|---|---|
| 233 | 870 - SHS120/120/5.0(RHS120x120) | -90,0 | 90,0 | -90,0 | 0 | 0 | 0 |
| 344 | 6 - IPE200 | -90,0 | -3,9 | 180,0 | 0 | 0 | 0 |
| 524 | 6 - IPE200 | 0,0 | 0,0 | -180,0 | 0 | 0 | 0 |

#### Auflager und Kräfte

| Name | Auflager | Kräfte in | X [mm] |
|---|---|---|---|
| 233 / anfang | N-Vy-Vz-Mx-My-Mz | Position | 0 |
| 233 / ende | | Position | 0 |
| 344 / anfang | | Position | 0 |
| 524 / anfang | | Position | 0 |

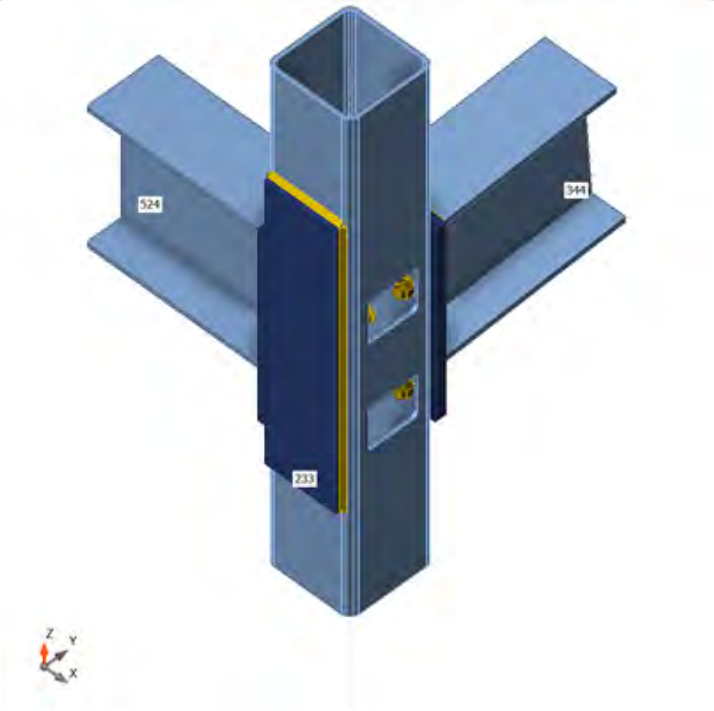


### Querschnitte

| Name | Material |
|---|---|
| 870 - SHS120/120/5.0(RHS120x120) | Baustahl S 355 |
| 6 - IPE200 | Baustahl S 355 |

## Schrauben

| Name | Durchmesser [mm] | $f_y$ [MPa] | $f_u$ [MPa] | Bruttofläche [$mm^2$] |
|---|---|---|---|---|
| M12 8.8 | 12 | 640,0 | 800,0 | 113 |

## Lasteinwirkungen (Kräfte im Gleichgewicht)

| Name | Bauteil | N [kN] | Vy [kN] | Vz [kN] | Mx [kNm] | My [kNm] | Mz [kNm] |
|---|---|---|---|---|---|---|---|
| CO11(23) | 233 / Anfang | -6,0 | 1,1 | -2,3 | -0,1 | -7,2 | -3,5 |
| | 233 / Ende | 1,5 | -7,1 | -15,6 | -0,7 | 9,6 | -4,4 |
| | 344 / Anfang | 4,6 | 2,1 | -4,8 | 0,1 | -11,6 | -1,0 |
| | 524 / Anfang | 16,6 | -0,2 | -0,1 | 0,0 | -13,3 | 0,2 |
| CO9(24) | 233 / Anfang | 0,4 | -0,5 | -0,4 | 0,0 | -1,3 | 1,4 |
| | 233 / Ende | -1,4 | -0,2 | 3,8 | -0,3 | -2,3 | -0,1 |
| | 344 / Anfang | -0,6 | 0,2 | -2,6 | 0,0 | -1,4 | -0,1 |
| | 524 / Anfang | -3,2 | 0,2 | 1,6 | 0,0 | 3,7 | -0,2 |
| CO11(25) | 233 / Anfang | 2,7 | 0,9 | 0,7 | 0,3 | 2,3 | -2,8 |
| | 233 / Ende | 4,0 | 0,2 | -13,9 | 0,1 | 8,5 | 0,1 |
| | 344 / Anfang | 1,4 | -0,3 | 7,8 | 0,0 | 2,4 | 0,1 |
| | 524 / Anfang | 12,7 | -0,4 | -1,2 | 0,0 | -11,3 | 0,3 |
| CO11(26) | 233 / Anfang | -2,7 | 0,4 | -1,6 | -0,1 | -5,1 | -1,2 |
| | 233 / Ende | 0,5 | -5,8 | -5,0 | -0,6 | 3,1 | -3,5 |
| | 344 / Anfang | 3,4 | 1,1 | -6,4 | 0,0 | -8,6 | -0,4 |
| | 524 / Anfang | 5,7 | 0,3 | 3,9 | 0,0 | -4,4 | -0,2 |
| CO11(27) | 233 / Anfang | -0,1 | 1,0 | -0,1 | 0,2 | -0,2 | -3,1 |
| | 233 / Ende | 3,9 | -1,7 | -15,1 | -0,1 | 9,3 | -1,0 |
| | 344 / Anfang | 2,4 | 0,4 | 5,1 | 0,0 | -1,2 | -0,2 |
| | 524 / Anfang | 14,5 | -0,4 | -1,4 | 0,0 | -12,4 | 0,3 |
| CO11(28) | 233 / Anfang | -8,0 | 1,1 | -2,6 | -0,1 | -7,9 | -3,3 |
| | 233 / Ende | 3,1 | -8,1 | -13,4 | -0,8 | 8,2 | -5,0 |
| | 344 / Anfang | 5,0 | 2,0 | -7,3 | 0,1 | -12,9 | -0,9 |
| | 524 / Anfang | 14,4 | 0,0 | 2,0 | 0,0 | -11,7 | 0,0 |
| CO11(29) | 233 / Anfang | 7,1 | 0,6 | 1,0 | 0,3 | 3,1 | -2,1 |
| | 233 / Ende | 1,8 | 0,0 | -11,6 | 0,0 | 7,1 | 0,0 |
| | 344 / Anfang | 1,6 | -0,7 | 7,7 | 0,0 | 3,1 | 0,3 |
| | 524 / Anfang | 10,3 | -0,1 | 1,1 | 0,0 | -9,2 | 0,0 |
| CO11(30) | 233 / Anfang | -4,4 | 1,1 | -2,5 | -0,1 | -7,8 | -3,4 |
| | 233 / Ende | -0,3 | -7,8 | -14,5 | -0,7 | 8,9 | -4,8 |
| | 344 / Anfang | 4,9 | 2,1 | -6,7 | 0,1 | -12,6 | -0,9 |
| | 524 / Anfang | 15,5 | 0,0 | 1,6 | 0,0 | -12,4 | 0,1 |
| CO11(31) | 233 / Anfang | -0,2 | 0,9 | 0,1 | 0,2 | 0,3 | -2,7 |
| | 233 / Ende | 3,8 | -0,9 | -12,7 | -0,1 | 7,8 | -0,6 |
| | 344 / Anfang | 1,7 | 0,2 | 5,1 | 0,0 | -0,3 | -0,2 |
| | 524 / Anfang | 12,1 | -0,4 | -1,6 | 0,0 | -10,5 | 0,3 |
| CO11(32) | 233 / Anfang | 0,8 | 0,5 | -0,9 | 0,1 | -2,9 | -1,5 |
| | 233 / Ende | 0,7 | -4,7 | -6,7 | -0,5 | 4,1 | -2,9 |
| | 344 / Anfang | 3,3 | 0,6 | -2,9 | 0,0 | -5,8 | -0,1 |
| | 524 / Anfang | 6,8 | 0,3 | 4,2 | 0,0 | -5,6 | -0,3 |
| CO11(33) | 233 / Anfang | -8,6 | 1,1 | -2,6 | -0,1 | -7,9 | -3,3 |
| | 233 / Ende | 1,9 | -7,1 | -14,4 | -0,7 | 8,9 | -4,3 |
| | 344 / Anfang | 4,3 | 2,5 | -5,9 | 0,1 | -12,3 | -1,1 |
| | 524 / Anfang | 15,8 | -0,2 | -1,1 | 0,0 | -12,3 | 0,3 |
| CO11(34) | 233 / Anfang | 0,7 | 0,3 | -0,7 | 0,0 | -2,4 | -1,0 |
| | 233 / Ende | 0,6 | -4,0 | -4,4 | -0,4 | 2,7 | -2,5 |
| | 344 / Anfang | 2,7 | 0,4 | -2,9 | 0,0 | -4,8 | -0,1 |
| | 524 / Anfang | 4,5 | 0,3 | 4,0 | 0,0 | -3,7 | -0,3 |

| Name | Bauteil | N [kN] | Vy [kN] | Vz [kN] | Mx [kNm] | My [kNm] | Mz [kNm] |
|---|---|---|---|---|---|---|---|
| CO11(14) | 233 / Anfang | 7,1 | 0,3 | 1,4 | 0,3 | 4,6 | -0,9 |
| | 233 / Ende | 1,6 | 2,4 | -6,0 | 0,2 | 3,7 | 1,5 |
| | 344 / Anfang | -0,3 | -1,1 | 8,2 | 0,0 | 6,1 | 0,5 |
| | 524 / Anfang | 4,6 | -0,1 | 0,5 | 0,0 | -4,5 | 0,0 |
| CO11(15) | 233 / Anfang | -7,7 | 1,1 | -2,9 | -0,1 | -8,8 | -3,4 |
| | 233 / Ende | 0,8 | -8,1 | -14,7 | -0,8 | 9,0 | -5,0 |
| | 344 / Anfang | 4,8 | 2,5 | -7,5 | 0,1 | -13,8 | -1,1 |
| | 524 / Anfang | 16,1 | -0,1 | 0,2 | 0,0 | -12,6 | 0,2 |
| CO11(16) | 233 / Anfang | -6,4 | 0,9 | -2,4 | -0,1 | -7,3 | -2,7 |
| | 233 / Ende | 1,7 | -7,4 | -10,2 | -0,7 | 6,3 | -4,6 |
| | 344 / Anfang | 4,4 | 1,8 | -8,0 | 0,1 | -11,9 | -0,7 |
| | 524 / Anfang | 11,1 | 0,1 | 2,9 | 0,0 | -9,0 | 0,0 |
| CO11(17) | 233 / Anfang | 5,6 | 0,5 | 1,3 | 0,3 | 4,1 | -1,5 |
| | 233 / Ende | 3,0 | 1,8 | -9,3 | 0,2 | 5,7 | 1,1 |
| | 344 / Anfang | 0,3 | -0,9 | 9,1 | 0,0 | 5,2 | 0,4 |
| | 524 / Anfang | 7,9 | -0,2 | -0,4 | 0,0 | -7,2 | 0,1 |
| CO11(18) | 233 / Anfang | -9,5 | 1,1 | -2,9 | -0,1 | -8,9 | -3,4 |
| | 233 / Ende | 2,4 | -8,2 | -14,1 | -0,8 | 8,7 | -5,1 |
| | 344 / Anfang | 4,9 | 2,5 | -7,8 | 0,1 | -13,9 | -1,1 |
| | 524 / Anfang | 15,5 | -0,1 | 0,4 | 0,0 | -12,2 | 0,2 |
| CO11(19) | 233 / Anfang | -6,9 | 1,1 | -2,1 | 0,0 | -6,4 | -3,4 |
| | 233 / Ende | 2,6 | -6,1 | -15,4 | -0,6 | 9,5 | -3,8 |
| | 344 / Anfang | 4,1 | 2,1 | -3,2 | 0,1 | -10,1 | -1,0 |
| | 524 / Anfang | 16,3 | -0,3 | -1,4 | 0,0 | -13,0 | 0,3 |
| CO11(20) | 233 / Anfang | -7,9 | 0,9 | -2,7 | -0,1 | -8,2 | -2,7 |
| | 233 / Ende | 1,0 | -7,5 | -10,9 | -0,7 | 6,7 | -4,6 |
| | 344 / Anfang | 4,3 | 2,2 | -8,5 | 0,1 | -12,9 | -1,0 |
| | 524 / Anfang | 12,2 | 0,0 | 1,3 | 0,0 | -9,6 | 0,1 |
| CO11(21) | 233 / Anfang | 5,8 | 0,6 | 1,1 | 0,3 | 3,7 | -2,0 |
| | 233 / Ende | 3,1 | 1,1 | -11,6 | 0,1 | 7,1 | 0,7 |
| | 344 / Anfang | 0,9 | -0,7 | 9,1 | 0,0 | 4,3 | 0,3 |
| | 524 / Anfang | 10,2 | -0,2 | -0,3 | 0,0 | -9,1 | 0,1 |
| CO11(22) | 233 / Anfang | 6,6 | 0,3 | 1,2 | 0,3 | 4,0 | -0,9 |
| | 233 / Ende | 2,0 | 1,2 | -5,5 | 0,2 | 3,4 | 0,7 |
| | 344 / Anfang | 0,5 | -1,1 | 6,5 | 0,0 | 4,7 | 0,5 |
| | 524 / Anfang | 4,1 | 0,0 | 2,1 | 0,0 | -4,2 | -0,1 |
| CO11(1) | 233 / Anfang | 8,6 | 0,4 | 1,1 | 0,3 | 3,6 | -1,4 |
| | 233 / Ende | 0,4 | 0,6 | -8,4 | 0,1 | 5,2 | 0,4 |
| | 344 / Anfang | 1,0 | -0,9 | 6,9 | 0,0 | 4,0 | 0,5 |
| | 524 / Anfang | 7,0 | 0,0 | 2,1 | 0,0 | -6,5 | -0,1 |
| CO11(2) | 233 / Anfang | -9,5 | 1,0 | -2,7 | -0,1 | -8,2 | -2,9 |
| | 233 / Ende | 2,3 | -7,5 | -11,8 | -0,7 | 7,2 | -4,6 |
| | 344 / Anfang | 4,3 | 2,3 | -7,6 | 0,1 | -12,8 | -1,0 |
| | 524 / Anfang | 13,1 | -0,1 | 0,2 | 0,0 | -10,3 | 0,2 |
| CO11(8) | 233 / Anfang | -7,8 | 0,7 | -2,5 | -0,1 | -7,6 | -2,2 |
| | 233 / Ende | 0,9 | -6,8 | -8,5 | -0,6 | 5,2 | -4,2 |
| | 344 / Anfang | 3,7 | 2,0 | -8,3 | 0,1 | -11,8 | -0,9 |
| | 524 / Anfang | 9,8 | 0,0 | 1,2 | 0,0 | -7,6 | 0,1 |
| CO11(10) | 233 / Anfang | 2,9 | 0,7 | -1,0 | 0,1 | -3,3 | -2,2 |

| Name | Bauteil | N [kN] | Vy [kN] | Vz [kN] | Mx [kNm] | My [kNm] | Mz [kNm] |
|---|---|---|---|---|---|---|---|
| | 233 / Ende | -1,3 | -5,1 | -11,1 | -0,5 | 6,8 | -3,1 |
| | 344 / Anfang | 3,8 | 0,9 | -1,6 | 0,0 | -6,4 | -0,3 |
| | 524 / Anfang | 11,3 | 0,2 | 2,9 | 0,0 | -9,0 | -0,1 |
| CO11(11) | 233 / Anfang | -7,8 | 1,2 | -2,4 | -0,1 | -7,3 | -3,5 |
| | 233 / Ende | 3,2 | -7,3 | -15,1 | -0,7 | 9,3 | -4,5 |
| | 344 / Anfang | 4,7 | 2,1 | -5,1 | 0,1 | -11,7 | -0,9 |
| | 524 / Anfang | 16,0 | -0,1 | 0,1 | 0,0 | -12,9 | 0,2 |

### Fehlende Lasten

| Name | X [kN] | Y [kN] | Z [kN] | Mx [kNm] | My [kNm] | Mz [kNm] |
|---|---|---|---|---|---|---|
| CO11(23) | -3,5 | 1,2 | 0,0 | 3,7 | 10,7 | 0,0 |
| CO9(24) | -0,1 | 0,8 | 0,0 | 2,7 | -0,2 | 0,0 |
| CO11(25) | -0,2 | -1,6 | 0,0 | -5,1 | 0,5 | 0,0 |
| CO11(26) | -2,0 | 1,2 | 0,0 | 3,8 | 6,3 | 0,0 |
| CO11(27) | -1,1 | -0,9 | 0,0 | -2,9 | 3,3 | 0,0 |
| CO11(28) | -3,7 | 1,5 | 0,0 | 4,6 | 11,3 | 0,0 |
| CO11(29) | 0,3 | -1,6 | 0,0 | -5,2 | -1,0 | 0,0 |
| CO11(30) | -3,6 | 1,4 | 0,0 | 4,4 | 11,1 | 0,0 |
| CO11(31) | -0,8 | -0,9 | 0,0 | -3,0 | 2,4 | 0,0 |
| CO11(32) | -1,4 | 0,4 | 0,0 | 1,4 | 4,4 | 0,0 |
| CO11(33) | -3,7 | 1,5 | 0,0 | 4,6 | 11,3 | 0,0 |
| CO11(34) | -1,1 | 0,4 | 0,0 | 1,3 | 3,4 | 0,0 |
| CO11(14) | 1,2 | -1,7 | 0,0 | -5,5 | -3,7 | 0,0 |
| CO11(15) | -4,0 | 1,8 | 0,0 | 5,4 | 12,2 | 0,0 |
| CO11(16) | -3,2 | 1,5 | 0,0 | 4,7 | 10,0 | 0,0 |
| CO11(17) | 0,8 | -1,8 | 0,0 | -5,6 | -2,5 | 0,0 |
| CO11(18) | -4,0 | 1,8 | 0,0 | 5,5 | 12,3 | 0,0 |
| CO11(19) | -3,2 | 1,0 | 0,0 | 2,9 | 9,8 | 0,0 |
| CO11(20) | -3,6 | 1,8 | 0,0 | 5,5 | 11,0 | 0,0 |
| CO11(21) | 0,5 | -1,8 | 0,0 | -5,7 | -1,6 | 0,0 |
| CO11(22) | 1,0 | -1,5 | 0,0 | -4,9 | -3,1 | 0,0 |
| CO11(1) | 0,7 | -1,6 | 0,0 | -5,0 | -2,2 | 0,0 |
| CO11(2) | -3,7 | 1,8 | 0,0 | 5,3 | 11,2 | 0,0 |
| CO11(8) | -3,2 | 1,8 | 0,0 | 5,3 | 9,8 | 0,0 |
| CO11(10) | -1,7 | 0,4 | 0,0 | 1,1 | 5,5 | 0,0 |
| CO11(11) | -3,5 | 1,2 | 0,0 | 3,7 | 10,8 | 0,0 |

## Nachweis

### Übersicht

| Name | Wert | Nachweisstatus |
|---|---|---|
| Berechnung | 100,0% | OK |
| Platten | 2,3 < 5,0% | OK |
| Lokale Verformung | 0,7 < 3% | OK |
| Schrauben | 78,7 < 100% | OK |
| Schweißnähte | 99,1 < 100% | OK |
| Beulen | Nicht berechnet | |
| GMNA | Berechnet | |

## Platten

| Name | Material | $t_p$ [mm] | Lasten | $\sigma_{Ed}$ [MPa] | $\varepsilon_{Pl}$ [%] | $\sigma_{c,Ed}$ [MPa] | Status |
|---|---|---|---|---|---|---|---|
| 233 | Baustahl S 355 | 5,0 | CO11(18) | 359,8 | 2,3 | 243,1 | OK |
| 344-bfl 1 | Baustahl S 355 | 8,5 | CO11(18) | 281,5 | 0,0 | 0,0 | OK |
| 344-tfl 1 | Baustahl S 355 | 8,5 | CO11(18) | 184,5 | 0,0 | 0,0 | OK |
| 344-w 1 | Baustahl S 355 | 5,6 | CO11(14) | 122,9 | 0,0 | 0,0 | OK |
| 524-bfl 1 | Baustahl S 355 | 8,5 | CO11(15) | 218,8 | 0,0 | 0,0 | OK |
| 524-tfl 1 | Baustahl S 355 | 8,5 | CO11(23) | 202,7 | 0,0 | 0,0 | OK |
| 524-w 1 | Baustahl S 355 | 5,6 | CO11(23) | 112,4 | 0,0 | 0,0 | OK |
| Stirnblech1 | S 355 | 15,0 | CO11(18) | 156,4 | 0,0 | 206,2 | OK |
| Stirnblech2 | S 355 | 10,0 | CO11(27) | 297,9 | 0,0 | 148,5 | OK |
| Steifenblech1 | S 355 | 10,0 | CO11(18) | 155,0 | 0,0 | 4,7 | OK |

**Bemessungsdaten**

| Material | $f_y$ [MPa] | $\varepsilon_{lim}$ [%] |
|---|---|---|
| Baustahl S 355 | 355,0 | 5,0 |
| S 355 | 355,0 | 5,0 |

**Erläuterung von Symbolen**

| | |
|---|---|
| $t_p$ | Plattendicke |
| $\sigma_{Ed}$ | Vergleichsspannung |
| $\varepsilon_{Pl}$ | Plastische Dehnung |
| $\sigma_{c,Ed}$ | Kontaktspannung |
| $f_y$ | Streckgrenze |
| $\varepsilon_{lim}$ | Grenzwert plastische Dehnung |

## Lokale Verformung

| Name | $d_0$ [mm] | Lasten | $\delta$ [mm] | $\delta_{lim}$ [mm] | $\delta/d_0$ [%] | Nachweisstatus |
|---|---|---|---|---|---|---|
| 233 | 120 | CO11(18) | 1 | 4 | 0,7 | OK |

**Erläuterung von Symbolen**

| | |
|---|---|
| $d_0$ | Querschnittsgröße |
| $\delta$ | Lokale Verformung im Querschnitt |
| $\delta_{lim}$ | Zulässige Verformung |

*Gesamt, CO11(18)*

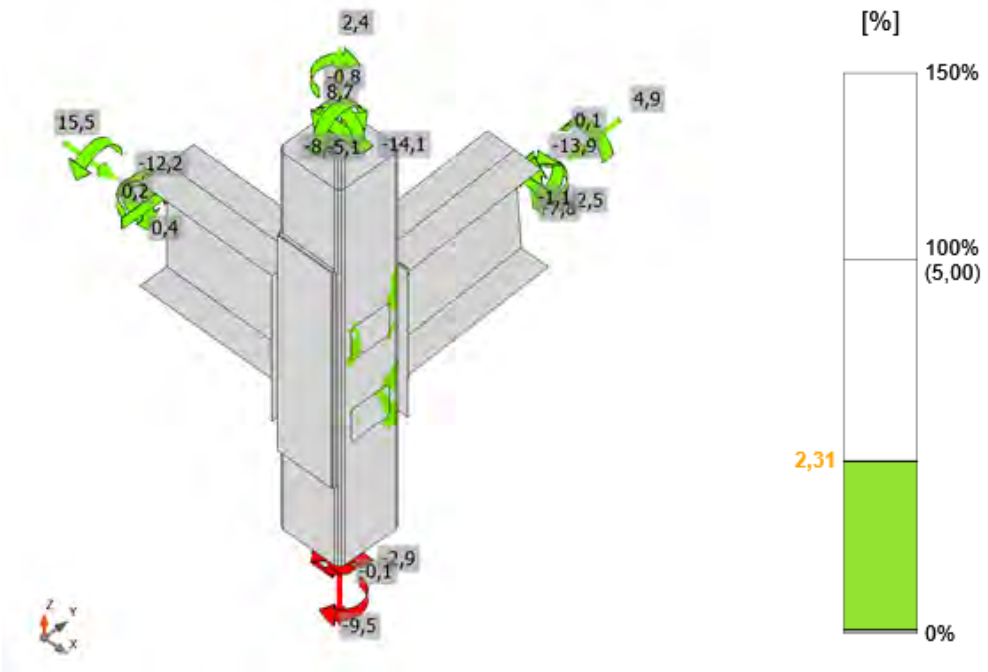


*Dehnung, CO11(18)*

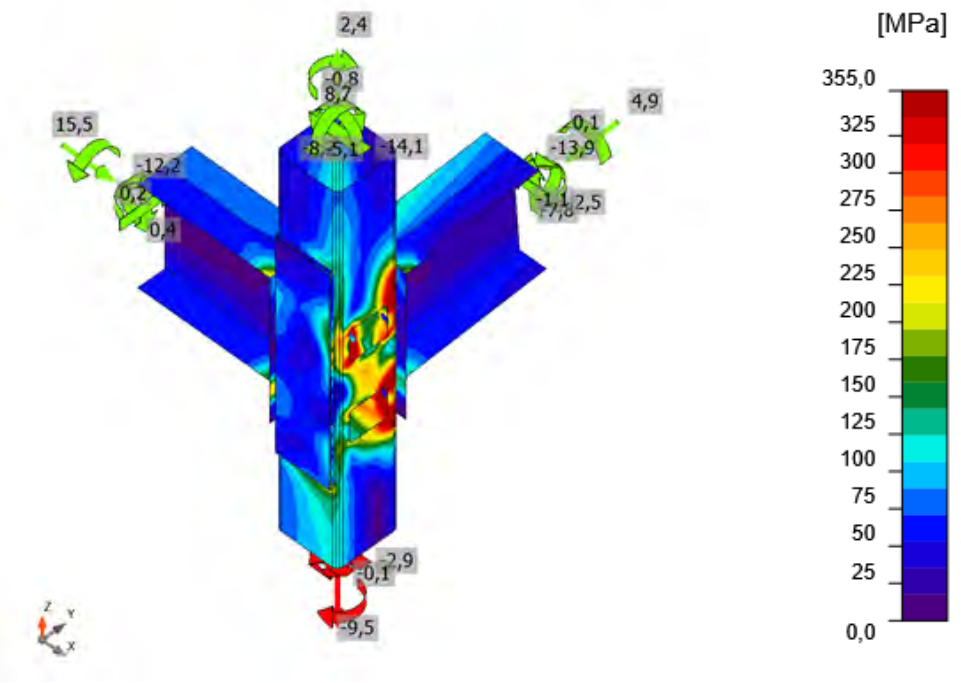


*Vergleichsspannung, CO11(18)*

## Schrauben

| Form | Position | Klasse | Lasten | $F_{t,Ed}$ [kN] | $F_{v,Ed}$ [kN] | $F_{b,Rd}$ [kN] | $Ut_t$ [%] | $Ut_s$ [%] | $Ut_{ts}$ [%] | Konstruktionsregeln | Status |
|---|---|---|---|---|---|---|---|---|---|---|---|
| 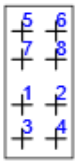 | B1 | M12 8.8 - 1 | CO11(18) | 25,9 | 1,1 | 58,8 | 53,4 | 3,5 | 41,6 | OK | OK |
| | B2 | M12 8.8 - 1 | CO11(18) | 29,5 | 1,7 | 58,8 | 60,8 | 5,2 | 48,7 | OK | OK |
| | B3 | M12 8.8 - 1 | CO11(18) | 35,6 | 2,5 | 58,8 | 73,4 | 7,7 | 60,2 | OK | OK |
| | B4 | M12 8.8 - 1 | CO11(18) | 38,2 | 3,2 | 58,8 | 78,7 | 9,9 | 66,1 | OK | OK |
| | B5 | M12 8.8 - 1 | CO11(14) | 19,9 | 1,3 | 58,8 | 41,0 | 4,0 | 33,3 | OK | OK |
| | B6 | M12 8.8 - 1 | CO11(14) | 24,6 | 1,3 | 58,8 | 50,7 | 4,1 | 40,4 | OK | OK |
| | B7 | M12 8.8 - 1 | CO11(14) | 10,0 | 0,9 | 58,8 | 20,7 | 2,7 | 17,5 | OK | OK |
| | B8 | M12 8.8 - 1 | CO11(14) | 14,1 | 1,1 | 58,8 | 29,0 | 3,3 | 24,0 | OK | OK |
| 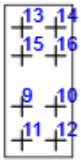 | B9 | M12 8.8 - 1 | CO11(23) | 24,7 | 1,1 | 58,8 | 50,9 | 3,5 | 39,9 | OK | OK |
| | B10 | M12 8.8 - 1 | CO11(27) | 28,2 | 0,9 | 58,8 | 58,1 | 2,7 | 44,2 | OK | OK |
| | B11 | M12 8.8 - 1 | CO11(23) | 24,5 | 1,6 | 58,8 | 50,4 | 5,0 | 41,0 | OK | OK |
| | B12 | M12 8.8 - 1 | CO11(27) | 29,4 | 1,6 | 58,8 | 60,5 | 4,9 | 48,1 | OK | OK |
| | B13 | M12 8.8 - 1 | CO9(24) | 16,1 | 0,6 | 58,8 | 33,2 | 1,8 | 25,5 | OK | OK |
| | B14 | M12 8.8 - 1 | CO9(24) | 16,0 | 0,7 | 58,8 | 32,9 | 2,0 | 25,5 | OK | OK |
| | B15 | M12 8.8 - 1 | CO9(24) | 6,7 | 0,5 | 58,8 | 13,8 | 1,5 | 11,4 | OK | OK |
| | B16 | M12 8.8 - 1 | CO9(24) | 5,9 | 0,4 | 58,8 | 12,0 | 1,2 | 9,8 | OK | OK |

**Bemessungsdaten**

| Klasse | $F_{t,Rd}$ [kN] | $B_{p,Rd}$ [kN] | $F_{v,Rd}$ [kN] |
|---|---|---|---|
| M12 8.8 - 1 | 48,6 | 70,3 | 32,4 |

**Erläuterung von Symbolen**

| | |
|---|---|
| $F_{t,Ed}$ | Zugkraft |
| $F_{v,Ed}$ | Resultierende der Schraubenscherkräfte Vy und Vz in Scherebenen |
| $F_{b,Rd}$ | Lochleibungstragfähigkeit der Platte nach EN 1993-1-8 Tab. 3.4 |
| $Ut_t$ | Ausnutzung unter Zug |
| $Ut_s$ | Ausnutzung unter Schub |
| $Ut_{ts}$ | Interaktion von Zug und Schub EN_1993-1-8 Tabelle 3.4 |
| $F_{t,Rd}$ | Zugtragfähigkeit der Schraube nach EN 1993-1-8 Tabelle 3.4 |
| $B_{p,Rd}$ | Durchstanztragfähigkeit nach EN 1993-1-8 Tabelle 3.4 |
| $F_{v,Rd}$ | Schertragfähigkeit der Schraube nach EN 1993-1-8 Tabelle 3.4 |

## Schweißnähte

| Position | Kante | $T_w$ [mm] | L [mm] | Lasten | $\sigma_{w,Ed}$ [MPa] | $\varepsilon_{Pl}$ [%] | $\sigma_{\perp}$ [MPa] | $\tau_{\perp}$ [MPa] | $\tau_{\parallel}$ [MPa] | Ut [%] | $Ut_c$ [%] | Konstruktionsregeln | Status |
|---|---|---|---|---|---|---|---|---|---|---|---|---|---|
| Stirnblech1 | 344-bfl 1 | ◢ 6,0 ◣ | 100 | CO11(18) | 324,6 | 0,0 | -117,7 | -142,5 | 101,0 | 74,5 | 37,6 | OK | OK |
| | | ◢ 6,0 ◣ | 100 | CO11(18) | 401,7 | 0,0 | -168,7 | 140,8 | -156,5 | 92,2 | 47,4 | OK | OK |
| Stirnblech1 | 344-tfl 1 | ◢ 6,0 ◣ | 100 | CO11(14) | 144,2 | 0,0 | -70,3 | -51,7 | -51,1 | 33,1 | 26,9 | OK | OK |
| | | ◢ 6,0 ◣ | 100 | CO11(14) | 94,9 | 0,0 | -26,0 | 48,6 | 20,4 | 21,8 | 16,3 | OK | OK |
| Stirnblech1 | 344-w 1 | ◢ 4,0 ◣ | 191 | CO11(14) | 71,9 | 0,0 | 32,8 | 35,2 | -11,2 | 16,5 | 12,4 | OK | OK |
| | | ◢ 4,0 ◣ | 191 | CO11(14) | 66,5 | 0,0 | 34,5 | -32,1 | 7,1 | 15,3 | 10,2 | OK | OK |
| Stirnblech2 | 524-bfl 1 | ◢ 3,0 ◣ | 100 | CO11(23) | 430,3 | 2,0 | -187,8 | -197,1 | -105,3 | 98,8 | 86,3 | OK | OK |
| | | ◢ 3,0 ◣ | 100 | CO11(23) | 431,6 | 2,8 | -196,3 | 199,4 | 97,4 | 99,1 | 89,8 | OK | OK |
| Stirnblech2 | 524-tfl 1 | ◢ 3,0 ◣ | 99 | CO11(23) | 360,3 | 0,0 | 266,4 | 140,1 | 0,9 | 82,7 | 59,5 | OK | OK |
| | | ◢ 3,0 ◣ | 100 | CO11(23) | 153,8 | 0,0 | -40,6 | -85,4 | -6,6 | 35,3 | 26,8 | OK | OK |
| Stirnblech2 | 524-w 1 | ◢ 3,0 ◣ | 191 | CO11(23) | 230,2 | 0,0 | -107,1 | -108,7 | -45,0 | 52,8 | 33,9 | OK | OK |
| | | ◢ 3,0 ◣ | 191 | CO11(23) | 222,6 | 0,0 | -104,3 | 103,1 | 47,6 | 51,1 | 30,5 | OK | OK |
| 233-w 2 | Steifenblech1 | ◢ 4,0 | 395 | CO11(18) | 243,6 | 0,0 | -14,6 | -1,8 | -140,4 | 55,9 | 37,2 | OK | OK |
| 233-w 2 | Steifenblech1 | ◢ 4,0 | 99 | CO11(15) | 70,6 | 0,0 | 35,0 | -34,9 | 5,4 | 16,2 | 11,3 | OK | OK |
| 233-w 2 | Steifenblech1 | ◢ 4,0 | 395 | CO11(27) | 174,8 | 0,0 | -173,5 | 6,6 | 10,6 | 49,2 | 23,3 | OK | OK |
| 233-w 2 | Steifenblech1 | ◢ 4,0 | 99 | CO11(15) | 112,2 | 0,0 | -43,4 | 55,9 | -21,2 | 25,8 | 19,1 | OK | OK |
| Steifenblech1 | 233-w 2 | ◢ 4,0 | 395 | CO11(23) | 339,3 | 0,0 | 24,3 | 191,5 | 38,7 | 77,9 | 42,3 | OK | OK |
| Steifenblech1 | 233-w 2 | ◢ 4,0 | 395 | CO11(18) | 201,2 | 0,0 | 6,4 | -88,6 | 75,0 | 46,2 | 27,0 | OK | OK |

**Bemessungsdaten**

| Material | $f_u$ [MPa] | $\beta_w$ [-] | $\sigma_{w,Rd}$ [MPa] | 0.9 σ [MPa] |
|---|---|---|---|---|
| S 355 | 490,0 | 0,90 | 435,6 | 352,8 |

**Erläuterung von Symbolen**

| | |
|---|---|
| $T_w$ | Nahtdicke a |
| L | Länge |
| $\sigma_{w,Ed}$ | Vergleichsspannung |
| $\varepsilon_{Pl}$ | Dehnung |
| $\sigma_{\perp}$ | Senkrechte Spannung |
| $\tau_{\perp}$ | Scherspannung senkrecht zur Schweißnahtachse |
| $\tau_{\parallel}$ | Scherspannung parallel zur Schweißnahtachse |
| Ut | Ausnutzung |
| $Ut_c$ | Schätzung der Schweißnahtkapazität |
| ◢ | Kehlnaht |
| $f_u$ | Grenzfestigkeit der Schweißnaht |
| $\beta_w$ | Korrelationsfaktor nach EN 1993-1-8 Tab. 4.1 |
| $\sigma_{w,Rd}$ | Tragfähigkeit der Schweißnaht |
| 0.9 σ | Senkrechter Spannungswiderstand - 0.9*fu / γM2 |

### Beulen

**Die Beulanalyse wurde nicht berechnet.**

## Normeinstellungen

| Position | Wert | Einheit | Bezug |
|---|---|---|---|
| Sicherheitsfaktor $\gamma_{M0}$ | 1,00 | - | EN 1993-1-1 – 6.1 |
| Sicherheitsfaktor $\gamma_{M1}$ | 1,00 | - | EN 1993-1-1 – 6.1 |
| Sicherheitsfaktor $\gamma_{M2}$ | 1,25 | - | EN 1993-1-1 – 6.1 |
| Sicherheitsfaktor $\gamma_{M3}$ | 1,25 | - | EN 1993-1-8 – Table 2.1 |
| Sicherheitsfaktor $\gamma_C$ | 1,50 | - | EN 1992-1-1 – 2.4.2.4 |
| Sicherheitsfaktor $\gamma_{Inst}$ | 1,20 | - | EN 1992-4 – Table 4.1 |
| Verbindungskoeffizient βj | 0,67 | - | EN 1993-1-8 – 6.2.5(7) |
| Wirksame Fläche - Einfluss der Netzgröße | 0,10 | - | |
| Reibungsbeiwert - Beton | 0,25 | - | EN 1993-1-8 |
| Reibungskoeffizient bei gleitfesten Verbindungen | 0,30 | - | EN 1993-1-8 – Table 3.7 |
| Plastische Dehnung - Grenzwert | 0,05 | - | EN 1993-1-5 |
| Konstruktionsregeln | Ja | | |
| Distance between bolts [d0] | 2,20 | - | EN 1993-1-8 – Table 3.3 |
| Distance between bolts and edge [d0] | 1,20 | - | EN 1993-1-8 – Table 3.3 |
| Nachweis der Tragfähigkeit bei Betonausbruch | Beide | | |
| Berechnetes αb für Lochleibungsnachweis anwenden. | Ja | | EN 1993-1-8 – Table 3.4 |
| Gerissener Beton | Ja | | EN 1992-4 |
| Überprüfen der lokalen Verformung | Ja | | |
| Lokale Verformung - Grenzwert | 0,03 | - | CIDECT DG 1, 3 – 1.1 |
| Geometrische Nichtlinearität (GMNA) | Ja | | Analyse mit großen Verformungen für Verbindungen mit Hohlprofilen |
| Ausgesteiftes System | Nein | | EN 1993-1-8 – 5.2.2.5 |

| | |
|---|---|
| **Projekt:** | **IdeaStatiCa-Stadion_Fazanerija_JK-6_BR - 1426** |
| **Projektnummer:** | **Detajl D6-O6** |
| **Autor:** | **mag. Igor Gorup dipl. ing.** |

## Projektdaten

| | |
|---|---|
| Projektname | IdeaStatiCa-Stadion_Fazanerija_JK-6_BR - 1426 |
| Projektnummer | Detajl D6-O6 |
| Autor | mag. Igor Gorup dipl. ing. |
| Beschreibung | |
| Datum | 18.06.2025 |
| Norm | EN |

## Material

| | |
|---|---|
| Stahl | Baustahl S 355, Baustahl S 235, S 355 |

# Projektposition 1426

## Bemessung

| | |
|---|---|
| Name | 1426 |
| Beschreibung | |
| Berechnung | Spannung, Dehnung/ Lasten im Gleichgewicht |

### Bauteile

#### Geometrie

| Name | Querschnitt | β – Rotation [°] | Y - Rotation [°] | α - Rotation [°] | Abstand ex [mm] | Abstand ey [mm] | Abstand ez [mm] |
|---|---|---|---|---|---|---|---|
| 219 | 6 - IPE200 | 0,0 | 0,0 | -180,0 | 0 | 0 | 0 |
| 353 | 6 - IPE200 | -90,0 | -3,5 | 180,0 | 0 | 0 | 0 |

#### Auflager und Kräfte

| Name | Auflager | Kräfte in | X [mm] |
|---|---|---|---|
| 219 / anfang | N-Vy-Vz-Mx-My-Mz | Position | 0 |
| 219 / ende | | Position | 0 |
| 353 / anfang | | Position | 0 |

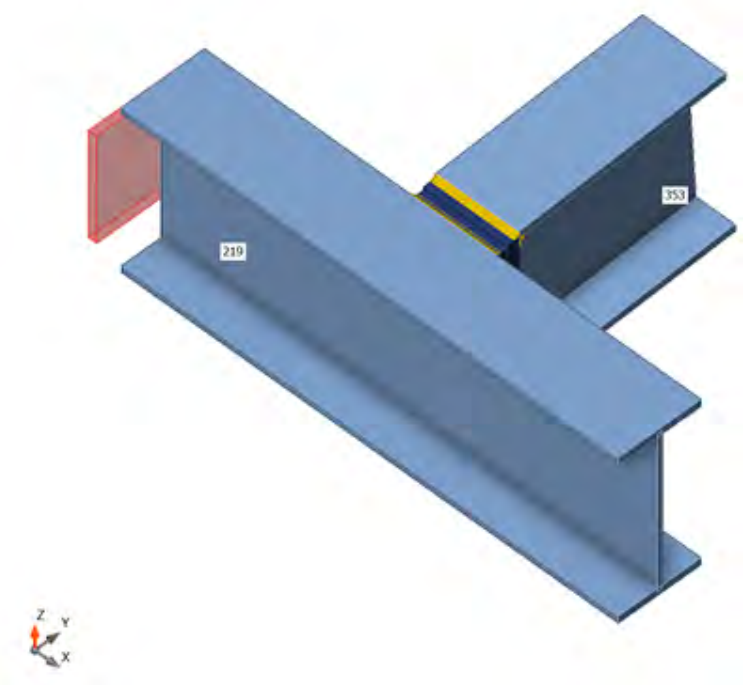


### Querschnitte

| Name | Material |
|---|---|
| 6 - IPE200 | Baustahl S 355 |

## Schrauben

| Name | Durchmesser [mm] | $f_y$ [MPa] | $f_u$ [MPa] | Bruttofläche [$mm^2$] |
|---|---|---|---|---|
| M12 8.8 | 12 | 640,0 | 800,0 | 113 |

## Lasteinwirkungen (Kräfte im Gleichgewicht)

| Name | Bauteil | N [kN] | Vy [kN] | Vz [kN] | Mx [kNm] | My [kNm] | Mz [kNm] |
|---|---|---|---|---|---|---|---|
| CO9(8) | 219 / Anfang | -3,7 | 0,0 | 0,7 | 0,0 | 1,2 | 0,0 |
| | 219 / Ende | 3,2 | -0,2 | -1,6 | 0,0 | -1,2 | -0,2 |
| | 353 / Anfang | 0,4 | -0,1 | 0,8 | 0,0 | 0,0 | 0,2 |
| CO11(9) | 219 / Anfang | 12,9 | 0,1 | -3,8 | 0,0 | -7,3 | -0,1 |
| | 219 / Ende | -12,7 | 0,4 | 3,3 | 0,0 | 7,3 | 0,4 |
| | 353 / Anfang | -0,5 | 0,2 | 0,6 | 0,0 | 0,0 | -0,3 |
| CO11(10) | 219 / Anfang | 5,4 | 0,0 | -3,8 | 0,0 | -7,8 | -0,1 |
| | 219 / Ende | -5,7 | -0,3 | -1,0 | 0,0 | 7,8 | -0,3 |
| | 353 / Anfang | 0,6 | -0,3 | 4,7 | 0,0 | 0,0 | 0,4 |
| CO11(11) | 219 / Anfang | 13,5 | 0,1 | -5,5 | 0,0 | -10,9 | -0,2 |
| | 219 / Ende | -13,5 | 0,1 | 1,8 | 0,0 | 10,9 | 0,2 |
| | 353 / Anfang | 0,0 | 0,0 | 3,7 | 0,0 | 0,0 | 0,0 |
| CO11(12) | 219 / Anfang | 13,6 | 0,0 | -4,2 | 0,0 | -7,9 | 0,0 |
| | 219 / Ende | -13,7 | 0,1 | 2,5 | 0,0 | 7,8 | 0,0 |
| | 353 / Anfang | 0,0 | 0,0 | 1,7 | 0,0 | 0,0 | 0,0 |
| CO11(13) | 219 / Anfang | 7,8 | 0,1 | -4,6 | 0,0 | -9,4 | -0,1 |
| | 219 / Ende | -8,1 | -0,3 | -0,6 | 0,0 | 9,4 | -0,3 |
| | 353 / Anfang | 0,6 | -0,3 | 5,2 | 0,0 | 0,0 | 0,4 |
| CO11(14) | 219 / Anfang | 13,0 | 0,0 | -4,9 | 0,0 | -9,4 | 0,0 |
| | 219 / Ende | -13,2 | -0,1 | 1,6 | 0,0 | 9,4 | -0,1 |
| | 353 / Anfang | 0,2 | -0,2 | 3,3 | 0,0 | 0,0 | 0,2 |
| CO11(15) | 219 / Anfang | 14,2 | 0,1 | -5,8 | 0,0 | -11,4 | -0,1 |
| | 219 / Ende | -14,3 | 0,0 | 1,5 | 0,0 | 11,4 | -0,1 |
| | 353 / Anfang | 0,2 | -0,2 | 4,3 | 0,0 | 0,0 | 0,2 |
| CO11(1) | 219 / Anfang | 16,6 | 0,0 | -5,5 | 0,0 | -10,4 | 0,0 |
| | 219 / Ende | -16,6 | 0,2 | 2,9 | 0,0 | 10,4 | 0,0 |
| | 353 / Anfang | 0,0 | 0,0 | 2,6 | 0,0 | 0,0 | 0,0 |
| CO11(3) | 219 / Anfang | 12,2 | 0,1 | -5,4 | 0,0 | -10,7 | -0,2 |
| | 219 / Ende | -12,3 | 0,1 | 1,5 | 0,0 | 10,7 | 0,1 |
| | 353 / Anfang | 0,1 | -0,1 | 3,9 | 0,0 | 0,0 | 0,1 |
| CO11(4) | 219 / Anfang | 15,4 | 0,0 | -6,0 | 0,0 | -11,6 | -0,1 |
| | 219 / Ende | -15,5 | 0,0 | 1,8 | 0,0 | 11,6 | 0,0 |
| | 353 / Anfang | 0,2 | -0,1 | 4,1 | 0,0 | 0,0 | 0,1 |
| CO11(6) | 219 / Anfang | 7,3 | 0,0 | -2,5 | 0,0 | -4,9 | 0,0 |
| | 219 / Ende | -7,4 | 0,0 | 0,8 | 0,0 | 4,9 | -0,1 |
| | 353 / Anfang | 0,2 | -0,1 | 1,7 | 0,0 | 0,0 | 0,1 |
| CO11(7) | 219 / Anfang | 12,3 | 0,0 | -5,4 | 0,0 | -10,7 | -0,1 |
| | 219 / Ende | -12,5 | -0,2 | 0,7 | 0,0 | 10,7 | -0,2 |
| | 353 / Anfang | 0,4 | -0,2 | 4,7 | 0,0 | 0,0 | 0,2 |

### Fehlende Lasten

| Name | X [kN] | Y [kN] | Z [kN] | Mx [kNm] | My [kNm] | Mz [kNm] |
|---|---|---|---|---|---|---|
| CO9(8) | -0,3 | -0,1 | 0,0 | 0,0 | 0,0 | 0,0 |
| CO11(9) | 0,0 | 0,0 | 0,0 | 0,0 | 0,0 | 0,0 |
| CO11(10) | 0,0 | 0,0 | 0,0 | 0,0 | 0,0 | 0,0 |
| CO11(11) | 0,0 | 0,0 | 0,0 | 0,0 | 0,0 | 0,0 |
| CO11(12) | 0,0 | 0,0 | 0,0 | 0,0 | 0,0 | 0,0 |
| CO11(13) | 0,0 | 0,0 | 0,0 | 0,0 | 0,0 | 0,0 |
| CO11(14) | 0,0 | 0,0 | 0,0 | 0,0 | 0,0 | 0,0 |
| CO11(15) | 0,0 | 0,0 | 0,0 | 0,0 | 0,0 | 0,0 |
| CO11(1) | 0,0 | 0,0 | 0,0 | 0,0 | 0,0 | 0,0 |
| CO11(3) | 0,0 | 0,0 | 0,0 | 0,0 | 0,0 | 0,0 |
| CO11(4) | 0,0 | 0,0 | 0,0 | 0,0 | 0,0 | 0,0 |
| CO11(6) | 0,0 | 0,0 | 0,0 | 0,0 | 0,0 | 0,0 |
| CO11(7) | 0,0 | 0,0 | 0,0 | 0,0 | 0,0 | 0,0 |

## Nachweis

### Übersicht

| Name | Wert | Nachweisstatus |
|---|---|---|
| Berechnung | 100,0% | OK |
| Platten | 0,0 < 5,0% | OK |
| Schrauben | 9,2 < 100% | OK |
| Schweißnähte | 16,5 < 100% | OK |
| Beulen | Nicht berechnet | |

### Platten

| Name | Material | $t_p$ [mm] | Lasten | $\sigma_{Ed}$ [MPa] | $\varepsilon_{Pl}$ [%] | $\sigma_{c,Ed}$ [MPa] | Status |
|---|---|---|---|---|---|---|---|
| 219-bfl 1 | Baustahl S 355 | 8,5 | CO11(4) | 72,9 | 0,0 | 0,0 | OK |
| 219-tfl 1 | Baustahl S 355 | 8,5 | CO11(15) | 65,0 | 0,0 | 0,0 | OK |
| 219-w 1 | Baustahl S 355 | 5,6 | CO11(4) | 63,3 | 0,0 | 0,0 | OK |
| 353-bfl 1 | Baustahl S 355 | 8,5 | CO11(10) | 23,6 | 0,0 | 0,0 | OK |
| 353-tfl 1 | Baustahl S 355 | 8,5 | CO11(13) | 22,2 | 0,0 | 0,0 | OK |
| 353-w 1 | Baustahl S 355 | 5,6 | CO11(13) | 15,4 | 0,0 | 0,0 | OK |
| Verschobene Stirnplatte1a | S 355 | 15,0 | CO11(4) | 30,5 | 0,0 | 4,1 | OK |
| Verschobene Stirnplatte1b | S 355 | 15,0 | CO11(13) | 25,8 | 0,0 | 11,5 | OK |
| STEIFF | S 355 | 10,0 | CO11(13) | 12,5 | 0,0 | 0,0 | OK |

**Bemessungsdaten**

| Material | $f_y$ [MPa] | $\varepsilon_{lim}$ [%] |
|---|---|---|
| Baustahl S 355 | 355,0 | 5,0 |
| S 355 | 355,0 | 5,0 |

**Erläuterung von Symbolen**

| | |
|---|---|
| $t_p$ | Plattendicke |
| $\sigma_{Ed}$ | Vergleichsspannung |
| $\varepsilon_{Pl}$ | Plastische Dehnung |
| $\sigma_{c,Ed}$ | Kontaktspannung |
| $f_y$ | Streckgrenze |
| $\varepsilon_{lim}$ | Grenzwert plastische Dehnung |

*Gesamt, CO11(4)*

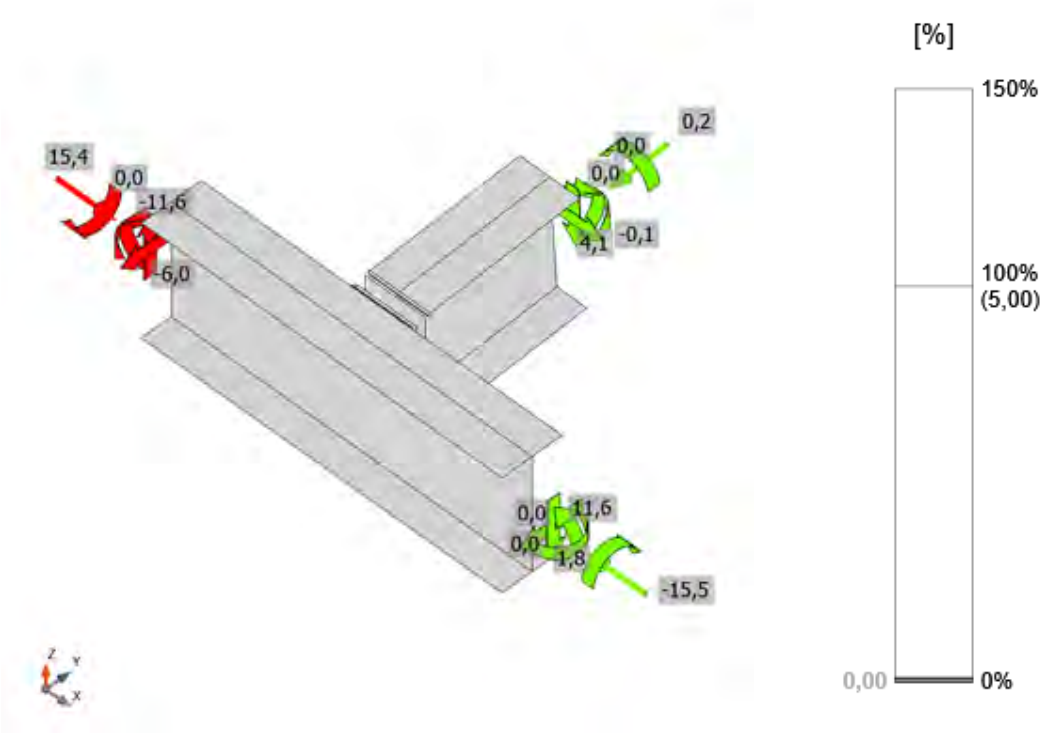


*Dehnung, CO11(4)*

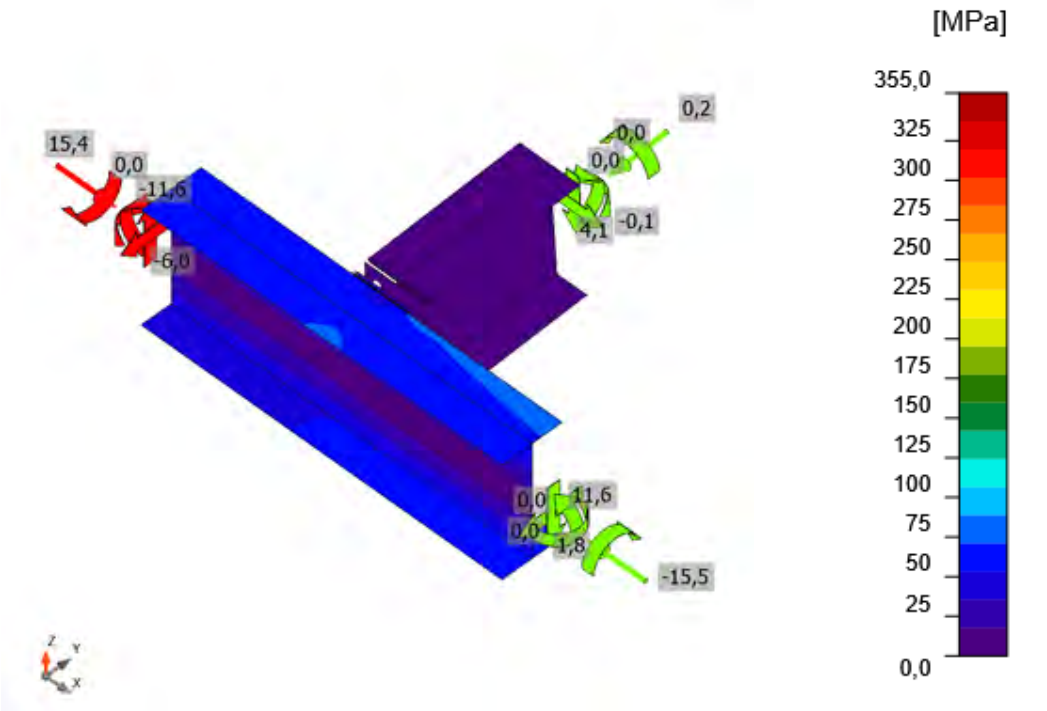


*Vergleichsspannung, CO11(4)*

## Schrauben

| Form | Position | Klasse | Lasten | $F_{t,Ed}$ [kN] | $F_{v,Ed}$ [kN] | $F_{b,Rd}$ [kN] | $Ut_t$ [%] | $Ut_s$ [%] | $Ut_{ts}$ [%] | Konstruktionsregeln | Status |
|---|---|---|---|---|---|---|---|---|---|---|---|
| 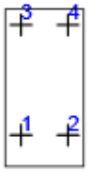 | B1 | M12 8.8 - 1 | CO11(13) | 0,9 | 1,3 | 176,4 | 2,0 | 4,0 | 5,4 | OK | OK |
| | B2 | M12 8.8 - 1 | CO11(13) | 3,5 | 1,3 | 176,4 | 7,3 | 4,0 | 9,2 | OK | OK |
| | B3 | M12 8.8 - 1 | CO11(13) | 0,1 | 1,4 | 108,6 | 0,3 | 4,2 | 4,4 | OK | OK |
| | B4 | M12 8.8 - 1 | CO11(13) | 1,2 | 1,3 | 108,6 | 2,5 | 3,9 | 5,7 | OK | OK |

### Bemessungsdaten

| Klasse | $F_{t,Rd}$ [kN] | $B_{p,Rd}$ [kN] | $F_{v,Rd}$ [kN] |
|---|---|---|---|
| M12 8.8 - 1 | 48,6 | 210,8 | 32,4 |

### Erläuterung von Symbolen

| | |
|---|---|
| $F_{t,Ed}$ | Zugkraft |
| $F_{v,Ed}$ | Resultierende der Schraubenscherkräfte Vy und Vz in Scherebenen |
| $F_{b,Rd}$ | Lochleibungstragfähigkeit der Platte nach EN 1993-1-8 Tab. 3.4 |
| $Ut_t$ | Ausnutzung unter Zug |
| $Ut_s$ | Ausnutzung unter Schub |
| $Ut_{ts}$ | Interaktion von Zug und Schub EN_1993-1-8 Tabelle 3.4 |
| $F_{t,Rd}$ | Zugtragfähigkeit der Schraube nach EN 1993-1-8 Tabelle 3.4 |
| $B_{p,Rd}$ | Durchstanztragfähigkeit nach EN 1993-1-8 Tabelle 3.4 |
| $F_{v,Rd}$ | Schertragfähigkeit der Schraube nach EN 1993-1-8 Tabelle 3.4 |

## Schweißnähte

| Position | Kante | $T_w$ [mm] | L [mm] | Lasten | $\sigma_{w,Ed}$ [MPa] | $\varepsilon_{Pl}$ [%] | $\sigma_{\perp}$ [MPa] | $\tau_{\perp}$ [MPa] | $\tau_{\parallel}$ [MPa] | Ut [%] | $Ut_c$ [%] | Konstruktionsregeln | Status |
|---|---|---|---|---|---|---|---|---|---|---|---|---|---|
| Verschobene Stirnplatte1a | 219-tfl 1 | ◢ 4,0 ◣ | 99 | CO11(15) | 62,5 | 0,0 | 15,7 | -15,1 | 31,5 | 14,3 | 8,5 | OK | OK |
| | | ◢ 4,0 ◣ | 99 | CO11(7) | 61,2 | 0,0 | 21,4 | 19,5 | -26,8 | 14,1 | 8,7 | OK | OK |
| Verschobene Stirnplatte1a | 219-bfl 1 | ◢ 4,0 ◣ | 100 | CO11(15) | 50,0 | 0,0 | -5,9 | -17,1 | -23,0 | 11,5 | 7,5 | OK | OK |
| | | ◢ 4,0 ◣ | 100 | CO11(13) | 71,9 | 0,0 | -26,0 | -26,8 | 27,9 | 16,5 | 9,5 | OK | OK |
| Verschobene Stirnplatte1b | 353-bfl 1 | ◢ 4,0 ◣ | 99 | CO11(10) | 15,1 | 0,0 | -6,3 | -6,5 | -4,5 | 3,5 | 3,5 | OK | OK |
| | | ◢ 4,0 ◣ | 99 | CO11(10) | 24,1 | 0,0 | -15,6 | -10,0 | 3,3 | 5,5 | 5,5 | OK | OK |
| Verschobene Stirnplatte1b | 353-tfl 1 | ◢ 4,0 ◣ | 100 | CO11(13) | 28,8 | 0,0 | -10,9 | -12,0 | -9,6 | 6,6 | 6,6 | OK | OK |
| | | ◢ 4,0 ◣ | 100 | CO11(13) | 30,5 | 0,0 | -11,9 | 10,6 | 12,3 | 7,0 | 6,5 | OK | OK |
| Verschobene Stirnplatte1b | 353-w 1 | ◢ 4,0 ◣ | 188 | CO11(13) | 15,8 | 0,0 | 6,4 | 4,7 | -6,9 | 3,6 | 3,6 | OK | OK |
| | | ◢ 4,0 ◣ | 189 | CO11(13) | 12,8 | 0,0 | -3,5 | 4,0 | 5,9 | 2,9 | 0,0 | OK | OK |
| 219-bfl 1 | STEIFF | ◢ 4,0 ◣ | 35 | CO11(15) | 23,7 | 0,0 | 3,5 | 3,4 | 13,1 | 5,4 | 5,4 | OK | OK |
| | | ◢ 4,0 ◣ | 35 | CO11(13) | 24,1 | 0,0 | 3,7 | -2,8 | -13,5 | 5,5 | 5,5 | OK | OK |
| 219-w 1 | STEIFF | ◢ 4,0 ◣ | 159 | CO11(15) | 20,5 | 0,0 | 2,7 | 3,3 | -11,3 | 4,7 | 4,7 | OK | OK |
| | | ◢ 4,0 ◣ | 159 | CO11(13) | 21,8 | 0,0 | 3,8 | -2,6 | 12,1 | 5,0 | 5,0 | OK | OK |
| 219-tfl 1 | STEIFF | ◢ 4,0 ◣ | 35 | CO11(13) | 18,4 | 0,0 | -2,4 | -4,5 | -9,5 | 4,2 | 4,2 | OK | OK |
| | | ◢ 4,0 ◣ | 35 | CO11(11) | 14,3 | 0,0 | -2,1 | 2,8 | -7,7 | 3,3 | 3,3 | OK | OK |
| Verschobene Stirnplatte1a | STEIFF | ◢ 4,0 ◣ | 181 | CO11(13) | 14,9 | 0,0 | 8,5 | 6,0 | -3,7 | 3,4 | 3,4 | OK | OK |
| | | ◢ 4,0 ◣ | 182 | CO11(13) | 14,6 | 0,0 | 1,2 | 8,0 | -2,8 | 3,4 | 3,4 | OK | OK |

**Bemessungsdaten**

| Material | $f_u$ [MPa] | $\beta_w$ [-] | $\sigma_{w,Rd}$ [MPa] | 0.9 σ [MPa] |
|---|---|---|---|---|
| S 355 | 490,0 | 0,90 | 435,6 | 352,8 |

**Erläuterung von Symbolen**

| | |
|---|---|
| $T_w$ | Nahtdicke a |
| L | Länge |
| $\sigma_{w,Ed}$ | Vergleichsspannung |
| $\varepsilon_{Pl}$ | Dehnung |
| $\sigma_{\perp}$ | Senkrechte Spannung |
| $\tau_{\perp}$ | Scherspannung senkrecht zur Schweißnahtachse |
| $\tau_{\parallel}$ | Scherspannung parallel zur Schweißnahtachse |
| Ut | Ausnutzung |
| $Ut_c$ | Schätzung der Schweißnahtkapazität |
| ◢ | Kehlnaht |
| $f_u$ | Grenzfestigkeit der Schweißnaht |
| $\beta_w$ | Korrelationsfaktor nach EN 1993-1-8 Tab. 4.1 |
| $\sigma_{w,Rd}$ | Tragfähigkeit der Schweißnaht |
| 0.9 σ | Senkrechter Spannungswiderstand - 0.9*fu / γM2 |

## Beulen

**Die Beulanalyse wurde nicht berechnet.**

## Normeinstellungen

| Position | Wert | Einheit | Bezug |
|---|---|---|---|
| Sicherheitsfaktor $\gamma_{M0}$ | 1,00 | - | EN 1993-1-1 – 6.1 |
| Sicherheitsfaktor $\gamma_{M1}$ | 1,00 | - | EN 1993-1-1 – 6.1 |
| Sicherheitsfaktor $\gamma_{M2}$ | 1,25 | - | EN 1993-1-1 – 6.1 |
| Sicherheitsfaktor $\gamma_{M3}$ | 1,25 | - | EN 1993-1-8 – Table 2.1 |
| Sicherheitsfaktor $\gamma_{C}$ | 1,50 | - | EN 1992-1-1 – 2.4.2.4 |
| Sicherheitsfaktor $\gamma_{Inst}$ | 1,20 | - | EN 1992-4 – Table 4.1 |
| Verbindungskoeffizient βj | 0,67 | - | EN 1993-1-8 – 6.2.5(7) |
| Wirksame Fläche - Einfluss der Netzgröße | 0,10 | - | |
| Reibungsbeiwert - Beton | 0,25 | - | EN 1993-1-8 |
| Reibungskoeffizient bei gleitfesten Verbindungen | 0,30 | - | EN 1993-1-8 – Table 3.7 |
| Plastische Dehnung - Grenzwert | 0,05 | - | EN 1993-1-5 |
| Konstruktionsregeln | Ja | | |
| Distance between bolts [d0] | 2,20 | - | EN 1993-1-8 – Table 3.3 |
| Distance between bolts and edge [d0] | 1,20 | - | EN 1993-1-8 – Table 3.3 |
| Nachweis der Tragfähigkeit bei Betonausbruch | Beide | | |
| Berechnetes αb für Lochleibungsnachweis anwenden. | Ja | | EN 1993-1-8 – Table 3.4 |
| Gerissener Beton | Ja | | EN 1992-4 |
| Überprüfen der lokalen Verformung | Ja | | |
| Lokale Verformung - Grenzwert | 0,03 | - | CIDECT DG 1, 3 – 1.1 |
| Geometrische Nichtlinearität (GMNA) | Ja | | Analyse mit großen Verformungen für Verbindungen mit Hohlprofilen |
| Ausgesteiftes System | Nein | | EN 1993-1-8 – 5.2.2.5 |

## Projektdaten

| | |
|---|---|
| Projektname | IdeaStatiCa-Stadion_Fazanerija_JK-6_BR - 33 |
| Projektnummer | Detajl D7-O6 |
| Autor | mag. Igor Gorup dipl. ing. |
| Beschreibung | |
| Datum | 18.06.2025 |
| Norm | EN |

## Material

| | |
|---|---|
| Stahl | Baustahl S 355, Baustahl S 235, S 355 |

# Projektposition 33

## Bemessung

| | |
|---|---|
| Name | 33 |
| Beschreibung | |
| Berechnung | Spannung, Dehnung/ Lasten im Gleichgewicht |

### Bauteile

#### Geometrie

| Name | Querschnitt | β – Rotation [°] | Y - Rotation [°] | α - Rotation [°] | Abstand ex [mm] | Abstand ey [mm] | Abstand ez [mm] |
|---|---|---|---|---|---|---|---|
| 153 | 24 - IPE240 | 90,0 | 0,0 | -180,0 | 0 | 0 | 0 |
| 233 | 870 - SHS120/120/5.0(RHS120x120) | 90,0 | 90,0 | 90,0 | 0 | 0 | 0 |
| 336 | 24 - IPE240 | 0,0 | 0,0 | -180,0 | 0 | 0 | 0 |

#### Auflager und Kräfte

| Name | Auflager | Kräfte in | X [mm] |
|---|---|---|---|
| 153 / anfang | N-Vy-Vz-Mx-My-Mz | Position | 0 |
| 153 / ende | | Position | 0 |
| 233 / ende | | Position | 0 |
| 336 / anfang | | Position | 0 |

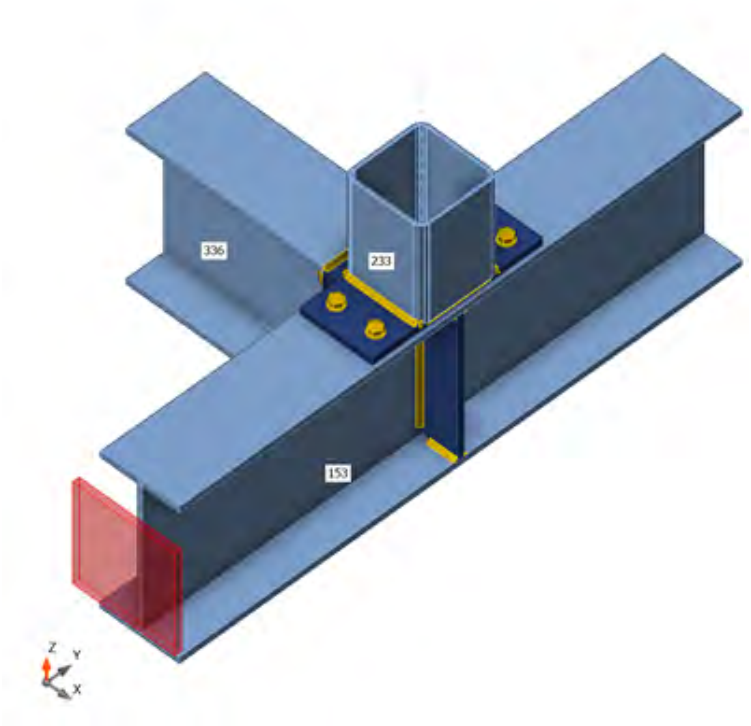


### Querschnitte

| Name | Material |
|---|---|
| 24 - IPE240 | Baustahl S 355 |
| 870 - SHS120/120/5.0(RHS120x120) | Baustahl S 355 |

## Schrauben

| Name | Durchmesser [mm] | $f_y$ [MPa] | $f_u$ [MPa] | Bruttofläche [$mm^2$] |
|---|---|---|---|---|
| M16 8.8 | 16 | 640,0 | 800,0 | 201 |
| M12 8.8 | 12 | 640,0 | 800,0 | 113 |

## Lasteinwirkungen (Kräfte im Gleichgewicht)

| Name | Bauteil | N [kN] | Vy [kN] | Vz [kN] | Mx [kNm] | My [kNm] | Mz [kNm] |
|---|---|---|---|---|---|---|---|
| CO11(25) | 153 / Anfang | -0,9 | -0,1 | 4,8 | 0,0 | -17,7 | 0,4 |
| | 153 / Ende | 0,1 | -2,4 | 5,0 | -0,1 | 17,7 | -1,3 |
| | 233 / Ende | 5,8 | -2,1 | -0,7 | 0,1 | 0,0 | 0,0 |
| | 336 / Anfang | 0,4 | -1,7 | -4,0 | 0,0 | -0,1 | 1,0 |
| CO9(26) | 153 / Anfang | 0,1 | 0,1 | -1,5 | 0,0 | -7,4 | -0,2 |
| | 153 / Ende | 1,2 | 1,0 | -3,3 | 0,0 | 7,4 | 0,4 |
| | 233 / Ende | -0,4 | -0,4 | 0,5 | 0,0 | 0,0 | 0,0 |
| | 336 / Anfang | -5,2 | 0,0 | 4,3 | 0,0 | 0,0 | -0,2 |
| CO11(27) | 153 / Anfang | 2,3 | -0,2 | -11,1 | 0,0 | -46,5 | 0,8 |
| | 153 / Ende | -1,9 | -2,3 | 2,0 | 0,0 | 46,5 | -1,2 |
| | 233 / Ende | -6,0 | 1,0 | -0,7 | -0,3 | 0,0 | 0,0 |
| | 336 / Anfang | -1,6 | 1,6 | 3,1 | 0,0 | 0,0 | 0,1 |
| CO11(28) | 153 / Anfang | -1,1 | 0,0 | 3,7 | 0,0 | -20,4 | 0,2 |
| | 153 / Ende | 1,5 | -2,0 | -0,8 | -0,1 | 20,5 | -1,2 |
| | 233 / Ende | 2,9 | -1,6 | -0,4 | 0,1 | 0,0 | 0,0 |
| | 336 / Anfang | -0,9 | -2,4 | 0,0 | 0,0 | -0,1 | 1,0 |
| CO11(29) | 153 / Anfang | -0,8 | -0,1 | 2,5 | 0,0 | -28,6 | 0,6 |
| | 153 / Ende | -0,2 | -2,9 | 3,4 | -0,2 | 28,6 | -1,6 |
| | 233 / Ende | 2,0 | -2,3 | -0,9 | 0,1 | 0,0 | 0,0 |
| | 336 / Anfang | 0,1 | -1,7 | -3,9 | 0,0 | -0,2 | 1,1 |
| CO11(30) | 153 / Anfang | 2,1 | -0,1 | -11,8 | 0,0 | -30,7 | 0,4 |
| | 153 / Ende | -1,6 | -1,2 | 1,4 | 0,0 | 30,7 | -0,5 |
| | 233 / Ende | -8,9 | 1,3 | -0,3 | -0,3 | 0,0 | 0,0 |
| | 336 / Anfang | -1,1 | 1,8 | 1,6 | 0,0 | 0,0 | -0,2 |
| CO11(31) | 153 / Anfang | -1,3 | -0,1 | 8,3 | 0,0 | -32,2 | 0,7 |
| | 153 / Ende | 0,2 | -3,5 | 2,5 | -0,2 | 32,2 | -2,0 |
| | 233 / Ende | 8,7 | -2,8 | -1,1 | 0,1 | 0,0 | 0,0 |
| | 336 / Anfang | -0,4 | -2,7 | -2,1 | 0,0 | -0,2 | 1,5 |
| CO11(32) | 153 / Anfang | -1,4 | -0,1 | 6,8 | 0,0 | -16,8 | 0,3 |
| | 153 / Ende | 0,3 | -2,5 | 2,0 | -0,1 | 16,8 | -1,4 |
| | 233 / Ende | 5,4 | -2,4 | -0,7 | 0,1 | 0,0 | 0,0 |
| | 336 / Anfang | 0,3 | -2,5 | -3,4 | 0,0 | -0,2 | 1,2 |
| CO11(33) | 153 / Anfang | 1,9 | -0,1 | -7,1 | 0,0 | -23,7 | 0,4 |
| | 153 / Ende | -2,9 | -1,4 | 1,4 | 0,0 | 23,7 | -0,4 |
| | 233 / Ende | -4,5 | 1,0 | -0,5 | -0,2 | 0,0 | 0,0 |
| | 336 / Anfang | -0,3 | 1,9 | 1,1 | 0,0 | 0,0 | -0,2 |
| CO11(34) | 153 / Anfang | -0,9 | -0,1 | 3,0 | 0,0 | -20,6 | 0,4 |
| | 153 / Ende | -0,1 | -2,4 | 3,3 | -0,1 | 20,7 | -1,3 |
| | 233 / Ende | 2,2 | -2,1 | -0,7 | 0,1 | 0,0 | 0,0 |
| | 336 / Anfang | 0,3 | -1,6 | -4,2 | 0,0 | -0,1 | 0,9 |
| CO11(35) | 153 / Anfang | 2,4 | -0,2 | -10,8 | 0,0 | -45,8 | 0,7 |
| | 153 / Ende | -2,2 | -2,2 | -0,1 | 0,0 | 45,8 | -1,0 |
| | 233 / Ende | -6,5 | 1,2 | -0,7 | -0,3 | 0,0 | 0,0 |
| | 336 / Anfang | -1,8 | 1,7 | 4,4 | 0,0 | 0,0 | 0,0 |
| CO11(36) | 153 / Anfang | 2,4 | -0,2 | -12,0 | 0,0 | -48,0 | 0,8 |

| Name | Bauteil | N [kN] | Vy [kN] | Vz [kN] | Mx [kNm] | My [kNm] | Mz [kNm] |
|---|---|---|---|---|---|---|---|
| | 153 / Ende | -2,0 | -2,4 | 1,2 | 0,0 | 48,0 | -1,2 |
| | 233 / Ende | -7,8 | 1,0 | -0,7 | -0,3 | 0,0 | 0,0 |
| | 336 / Anfang | -1,6 | 1,6 | 3,0 | 0,0 | 0,0 | 0,1 |
| CO11(37) | 153 / Anfang | -1,5 | -0,1 | 7,7 | 0,0 | -15,3 | 0,3 |
| | 153 / Ende | 0,4 | -2,5 | 2,8 | -0,1 | 15,3 | -1,4 |
| | 233 / Ende | 7,2 | -2,4 | -0,7 | 0,1 | 0,0 | 0,0 |
| | 336 / Anfang | 0,3 | -2,5 | -3,4 | 0,0 | -0,2 | 1,2 |
| CO11(38) | 153 / Anfang | -1,3 | -0,1 | 7,3 | 0,0 | -33,7 | 0,7 |
| | 153 / Ende | 0,1 | -3,6 | 1,7 | -0,2 | 33,7 | -2,0 |
| | 233 / Ende | 6,9 | -2,8 | -1,1 | 0,1 | 0,0 | 0,0 |
| | 336 / Anfang | -0,4 | -2,7 | -2,2 | 0,0 | -0,2 | 1,4 |
| CO11(39) | 153 / Anfang | 2,1 | -0,1 | -10,7 | 0,0 | -28,6 | 0,4 |
| | 153 / Ende | -1,8 | -1,1 | 0,1 | 0,1 | 28,6 | -0,4 |
| | 233 / Ende | -7,6 | 1,5 | -0,3 | -0,3 | 0,0 | 0,0 |
| | 336 / Anfang | -1,2 | 1,9 | 3,0 | 0,0 | 0,0 | -0,2 |
| CO11(14) | 153 / Anfang | 2,2 | -0,2 | -12,7 | 0,0 | -38,9 | 0,6 |
| | 153 / Ende | -1,8 | -1,8 | 1,5 | 0,0 | 38,8 | -0,8 |
| | 233 / Ende | -9,3 | 1,2 | -0,5 | -0,3 | 0,0 | 0,0 |
| | 336 / Anfang | -1,3 | 1,7 | 1,9 | 0,0 | 0,0 | 0,0 |
| CO11(15) | 153 / Anfang | -1,4 | -0,1 | 8,7 | 0,0 | -24,3 | 0,5 |
| | 153 / Ende | 0,3 | -3,0 | 2,4 | -0,2 | 24,3 | -1,7 |
| | 233 / Ende | 8,9 | -2,6 | -0,9 | 0,1 | 0,0 | 0,0 |
| | 336 / Anfang | -0,2 | -2,6 | -2,3 | 0,0 | -0,2 | 1,3 |
| CO11(19) | 153 / Anfang | -0,6 | -0,1 | 4,5 | 0,0 | -39,8 | 0,8 |
| | 153 / Ende | -0,4 | -3,5 | 1,6 | -0,2 | 39,8 | -2,0 |
| | 233 / Ende | 5,2 | -2,3 | -1,1 | 0,0 | 0,0 | 0,0 |
| | 336 / Anfang | -0,7 | -1,8 | -0,9 | 0,0 | -0,2 | 1,2 |
| CO11(22) | 153 / Anfang | 0,5 | -0,2 | -5,7 | 0,0 | -46,9 | 0,8 |
| | 153 / Ende | 0,4 | -2,8 | 1,6 | -0,1 | 46,9 | -1,6 |
| | 233 / Ende | -3,6 | -1,1 | -0,7 | -0,1 | 0,0 | 0,0 |
| | 336 / Anfang | -1,5 | -0,6 | 0,5 | 0,0 | -0,1 | 0,8 |
| CO11(23) | 153 / Anfang | 2,1 | -0,2 | -7,2 | 0,0 | -40,8 | 0,7 |
| | 153 / Ende | -3,3 | -2,5 | 1,2 | 0,0 | 40,8 | -1,1 |
| | 233 / Ende | -3,4 | 0,7 | -0,9 | -0,3 | 0,0 | 0,0 |
| | 336 / Anfang | -0,9 | 1,7 | 2,5 | 0,0 | 0,0 | 0,1 |
| CO11(24) | 153 / Anfang | -0,6 | -0,1 | 5,4 | 0,0 | -38,3 | 0,8 |
| | 153 / Ende | -0,3 | -3,5 | 2,4 | -0,2 | 38,3 | -2,0 |
| | 233 / Ende | 7,0 | -2,3 | -1,1 | 0,0 | 0,0 | 0,0 |
| | 336 / Anfang | -0,7 | -1,9 | -0,9 | 0,0 | -0,2 | 1,3 |
| CO11(3) | 153 / Anfang | 1,3 | -0,2 | -6,2 | 0,0 | -43,3 | 0,9 |
| | 153 / Ende | -2,2 | -2,9 | 3,6 | -0,1 | 43,2 | -1,5 |
| | 233 / Ende | -3,5 | -0,4 | -1,0 | -0,2 | 0,0 | 0,0 |
| | 336 / Anfang | -0,5 | 0,7 | -0,9 | 0,0 | -0,1 | 0,5 |
| CO11(5) | 153 / Anfang | 1,7 | -0,2 | -8,8 | 0,0 | -50,6 | 0,9 |
| | 153 / Ende | -1,2 | -2,7 | 0,7 | 0,0 | 50,6 | -1,5 |
| | 233 / Ende | -5,1 | 0,2 | -0,8 | -0,2 | 0,0 | 0,0 |
| | 336 / Anfang | -1,8 | 0,7 | 3,0 | 0,0 | -0,1 | 0,4 |

| Name | Bauteil | N [kN] | Vy [kN] | Vz [kN] | Mx [kNm] | My [kNm] | Mz [kNm] |
|---|---|---|---|---|---|---|---|
| CO11(11) | 153 / Anfang | 1,5 | -0,2 | -3,9 | 0,0 | -43,4 | 0,8 |
| | 153 / Ende | -2,5 | -2,8 | 0,8 | -0,1 | 43,3 | -1,4 |
| | 233 / Ende | -0,6 | -0,1 | -1,0 | -0,2 | 0,0 | 0,0 |
| | 336 / Anfang | -1,0 | 0,8 | 2,4 | 0,0 | -0,1 | 0,4 |
| CO11(12) | 153 / Anfang | -0,4 | -0,1 | -1,0 | 0,0 | -43,6 | 0,8 |
| | 153 / Ende | 1,1 | -3,1 | 1,4 | -0,1 | 43,6 | -1,9 |
| | 233 / Ende | -0,2 | -1,9 | -0,8 | 0,0 | 0,0 | 0,0 |
| | 336 / Anfang | -1,3 | -1,8 | -0,7 | 0,0 | -0,2 | 1,1 |
| CO11(13) | 153 / Anfang | 1,4 | -0,2 | -4,9 | 0,0 | -45,3 | 0,9 |
| | 153 / Ende | -2,4 | -3,0 | 2,1 | -0,1 | 45,3 | -1,5 |
| | 233 / Ende | -1,7 | -0,3 | -1,0 | -0,2 | 0,0 | 0,0 |
| | 336 / Anfang | -0,8 | 0,7 | 1,0 | 0,0 | -0,1 | 0,5 |

## Fehlende Lasten

| Name | X [kN] | Y [kN] | Z [kN] | Mx [kNm] | My [kNm] | Mz [kNm] |
|---|---|---|---|---|---|---|
| CO11(25) | -2,8 | 3,0 | 0,0 | 0,0 | 0,0 | 0,0 |
| CO9(26) | -3,7 | 1,7 | 0,0 | 0,0 | 0,0 | 0,0 |
| CO11(27) | -4,9 | -2,1 | 0,0 | 0,0 | 0,0 | 0,0 |
| CO11(28) | -3,3 | 4,4 | 0,0 | 0,0 | 0,0 | 0,0 |
| CO11(29) | -3,8 | 3,0 | 0,0 | 0,0 | 0,0 | 0,0 |
| CO11(30) | -2,8 | -2,6 | 0,0 | 0,0 | 0,0 | 0,0 |
| CO11(31) | -5,1 | 4,4 | 0,0 | 0,0 | 0,0 | 0,0 |
| CO11(32) | -3,0 | 3,7 | 0,0 | 0,0 | 0,0 | 0,0 |
| CO11(33) | -2,4 | -3,9 | 0,0 | 0,0 | 0,0 | 0,0 |
| CO11(34) | -2,9 | 2,7 | 0,0 | 0,0 | 0,0 | 0,0 |
| CO11(35) | -4,9 | -2,6 | 0,0 | 0,0 | 0,0 | 0,0 |
| CO11(36) | -4,9 | -2,2 | 0,0 | 0,0 | 0,0 | 0,0 |
| CO11(37) | -2,9 | 3,8 | 0,0 | 0,0 | 0,0 | 0,0 |
| CO11(38) | -5,1 | 4,3 | 0,0 | 0,0 | 0,0 | 0,0 |
| CO11(39) | -2,8 | -3,0 | 0,0 | 0,0 | 0,0 | 0,0 |
| CO11(14) | -3,7 | -2,4 | 0,0 | 0,0 | 0,0 | 0,0 |
| CO11(15) | -4,1 | 4,1 | 0,0 | 0,0 | 0,0 | 0,0 |
| CO11(19) | -5,5 | 3,1 | 0,0 | 0,0 | 0,0 | 0,0 |
| CO11(22) | -5,2 | 2,5 | 0,0 | 0,0 | 0,0 | 0,0 |
| CO11(23) | -4,5 | -3,5 | 0,0 | 0,0 | 0,0 | 0,0 |
| CO11(24) | -5,4 | 3,2 | 0,0 | 0,0 | 0,0 | 0,0 |
| CO11(3) | -4,6 | -1,2 | 0,0 | 0,0 | 0,0 | 0,0 |
| CO11(5) | -5,5 | -0,4 | 0,0 | 0,0 | 0,0 | 0,0 |
| CO11(11) | -5,1 | -1,8 | 0,0 | 0,0 | 0,0 | 0,0 |
| CO11(12) | -5,4 | 4,5 | 0,0 | 0,0 | 0,0 | 0,0 |
| CO11(13) | -5,1 | -1,4 | 0,0 | 0,0 | 0,0 | 0,0 |

# Nachweis

## Übersicht

| Name | Wert | Nachweisstatus |
|---|---|---|
| Berechnung | 100,0% | OK |
| Platten | 0,0 < 5,0% | OK |
| Lokale Verformung | 0,0 < 3% | OK |
| Schrauben | 15,7 < 100% | OK |
| Schweißnähte | 60,5 < 100% | OK |
| Beulen | Nicht berechnet | |

## Platten

| Name | Material | $t_p$ [mm] | Lasten | $\sigma_{Ed}$ [MPa] | $\varepsilon_{Pl}$ [%] | $\sigma_{c,Ed}$ [MPa] | Status |
|---|---|---|---|---|---|---|---|
| 153-bfl 1 | Baustahl S 355 | 9,8 | CO11(24) | 217,2 | 0,0 | 3,0 | OK |
| 153-tfl 1 | Baustahl S 355 | 9,8 | CO11(5) | 202,6 | 0,0 | 0,0 | OK |
| 153-w 1 | Baustahl S 355 | 6,2 | CO11(5) | 144,7 | 0,0 | 0,0 | OK |
| 233 | Baustahl S 355 | 5,0 | CO11(31) | 44,6 | 0,0 | 0,0 | OK |
| 336-bfl 1 | Baustahl S 355 | 9,8 | CO11(31) | 48,4 | 0,0 | 0,0 | OK |
| 336-tfl 1 | Baustahl S 355 | 9,8 | CO11(31) | 40,1 | 0,0 | 0,0 | OK |
| 336-w 1 | Baustahl S 355 | 6,2 | CO11(31) | 32,5 | 0,0 | 0,0 | OK |
| Verschobene Stirnplatte1a | S 355 | 15,0 | CO11(19) | 93,6 | 0,0 | 47,0 | OK |
| Verschobene Stirnplatte1b | S 355 | 15,0 | CO11(31) | 71,7 | 0,0 | 57,0 | OK |
| STEIFF | S 355 | 10,0 | CO11(38) | 28,8 | 0,0 | 0,0 | OK |
| Stirnblech1 | S 355 | 12,0 | CO11(31) | 63,7 | 0,0 | 7,7 | OK |
| Rippe1 | S 355 | 10,0 | CO11(5) | 24,2 | 0,0 | 0,0 | OK |

### Bemessungsdaten

| Material | $f_y$ [MPa] | $\varepsilon_{lim}$ [%] |
|---|---|---|
| Baustahl S 355 | 355,0 | 5,0 |
| S 355 | 355,0 | 5,0 |

### Erläuterung von Symbolen

| | |
|---|---|
| $t_p$ | Plattendicke |
| $\sigma_{Ed}$ | Vergleichsspannung |
| $\varepsilon_{Pl}$ | Plastische Dehnung |
| $\sigma_{c,Ed}$ | Kontaktspannung |
| $f_y$ | Streckgrenze |
| $\varepsilon_{lim}$ | Grenzwert plastische Dehnung |

## Lokale Verformung

| Name | $d_0$ [mm] | Lasten | $\delta$ [mm] | $\delta_{lim}$ [mm] | $\delta/d_0$ [%] | Nachweisstatus |
|---|---|---|---|---|---|---|
| 233 | 120 | CO11(13) | 0 | 4 | 0,0 | OK |

**Erläuterung von Symbolen**

| | |
|---|---|
| $d_0$ | Querschnittsgröße |
| δ | Lokale Verformung im Querschnitt |
| $\delta_{lim}$ | Zulässige Verformung |

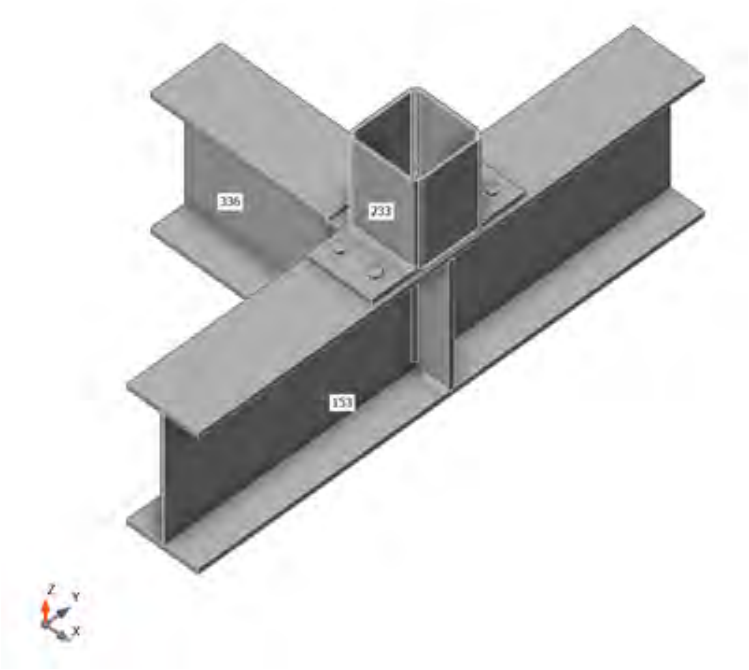


*Gesamt, CO11(24)*

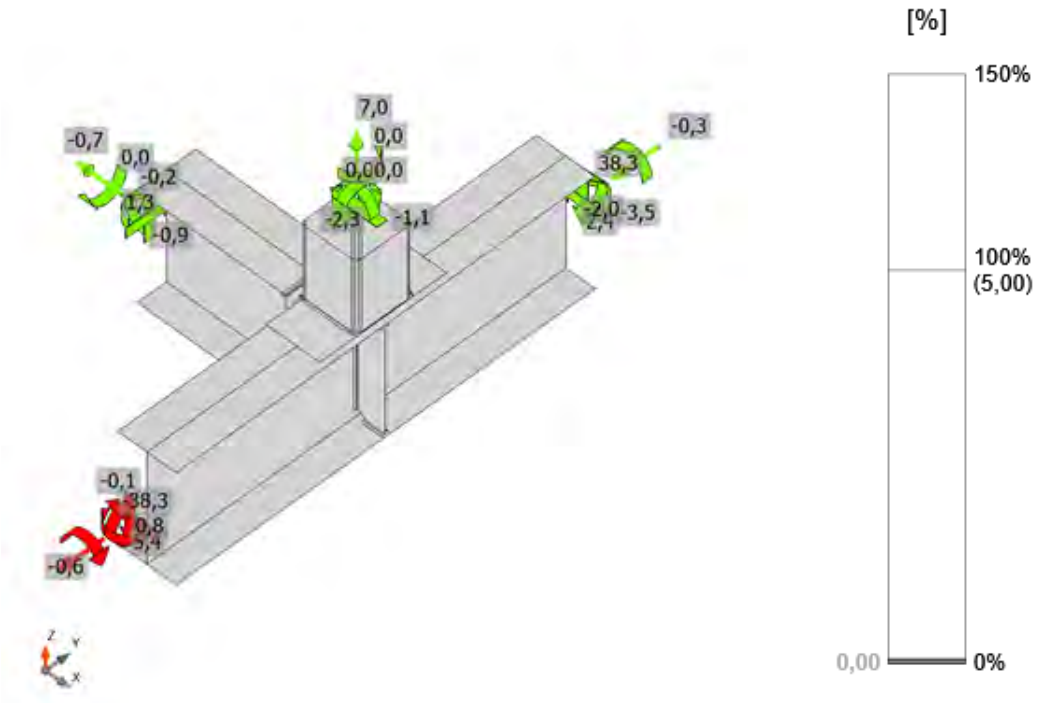


*Dehnung, CO11(24)*

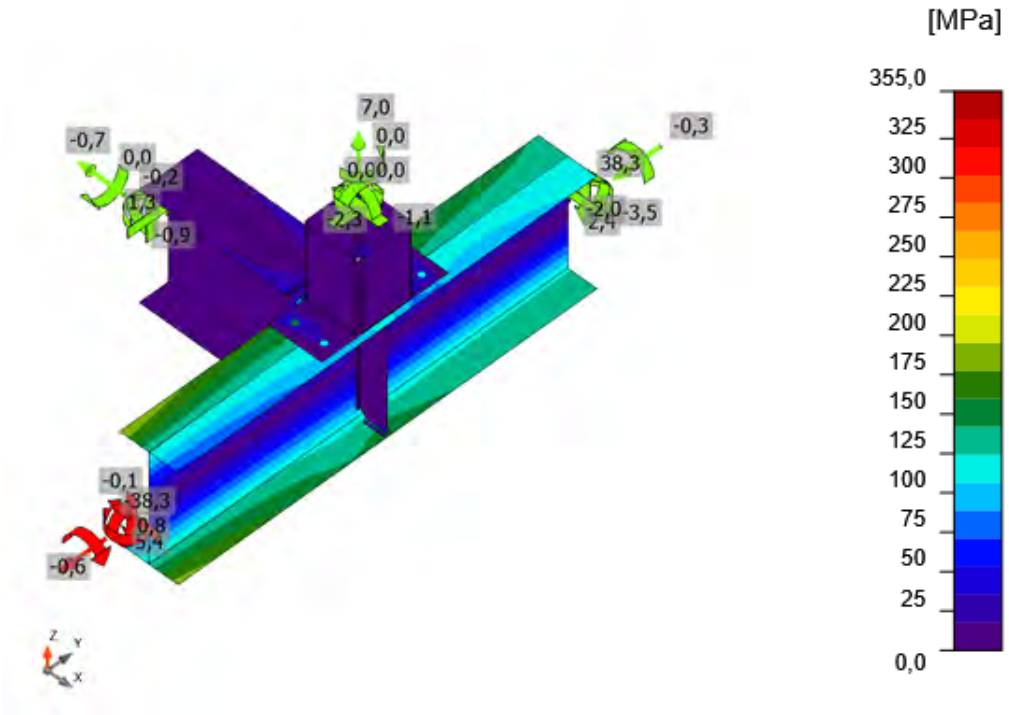


*Vergleichsspannung, CO11(24)*

## Schrauben

| Form | Position | Klasse | Lasten | $F_{t,Ed}$ [kN] | $F_{v,Ed}$ [kN] | $F_{b,Rd}$ [kN] | $Ut_t$ [%] | $Ut_s$ [%] | $Ut_{ts}$ [%] | Konstruktionsregeln | Status |
|---|---|---|---|---|---|---|---|---|---|---|---|
| 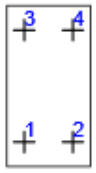 | B1 | M16 8.8 - 1 | CO9(26) | 3,9 | 1,1 | 133,9 | 4,3 | 1,8 | 4,9 | OK | OK |
| | B2 | M16 8.8 - 1 | CO11(12) | 5,5 | 0,4 | 108,5 | 6,1 | 0,7 | 5,0 | OK | OK |
| | B3 | M16 8.8 - 1 | CO11(38) | 3,0 | 1,0 | 96,1 | 3,4 | 1,7 | 4,1 | OK | OK |
| | B4 | M16 8.8 - 1 | CO11(31) | 9,9 | 0,9 | 95,4 | 11,0 | 1,5 | 9,3 | OK | OK |
| | B5 | M12 8.8 - 2 | CO11(36) | 0,2 | 2,9 | 115,2 | 0,4 | 9,1 | 9,3 | OK | OK |
| | B6 | M12 8.8 - 2 | CO11(31) | 4,4 | 2,0 | 115,2 | 9,1 | 6,2 | 12,7 | OK | OK |
| | B7 | M12 8.8 - 2 | CO11(24) | 3,9 | 1,3 | 115,2 | 8,1 | 4,0 | 9,7 | OK | OK |
| | B8 | M12 8.8 - 2 | CO11(31) | 6,0 | 2,2 | 115,2 | 12,4 | 6,8 | 15,7 | OK | OK |

**Bemessungsdaten**

| Klasse | $F_{t,Rd}$ [kN] | $B_{p,Rd}$ [kN] | $F_{v,Rd}$ [kN] |
|---|---|---|---|
| M16 8.8 - 1 | 90,4 | 281,2 | 60,3 |
| M12 8.8 - 2 | 48,6 | 137,7 | 32,4 |

**Erläuterung von Symbolen**

| | |
|---|---|
| $F_{t,Ed}$ | Zugkraft |
| $F_{v,Ed}$ | Resultierende der Schraubenscherkräfte Vy und Vz in Scherebenen |
| $F_{b,Rd}$ | Lochleibungstragfähigkeit der Platte nach EN 1993-1-8 Tab. 3.4 |
| $Ut_t$ | Ausnutzung unter Zug |
| $Ut_s$ | Ausnutzung unter Schub |
| $Ut_{ts}$ | Interaktion von Zug und Schub EN_1993-1-8 Tabelle 3.4 |
| $F_{t,Rd}$ | Zugtragfähigkeit der Schraube nach EN 1993-1-8 Tabelle 3.4 |
| $B_{p,Rd}$ | Durchstanztragfähigkeit nach EN 1993-1-8 Tabelle 3.4 |
| $F_{v,Rd}$ | Schertragfähigkeit der Schraube nach EN 1993-1-8 Tabelle 3.4 |

## Schweißnähte

| Position | Kante | $T_w$ [mm] | L [mm] | Lasten | $\sigma_{w,Ed}$ [MPa] | $\varepsilon_{Pl}$ [%] | $\sigma_{\perp}$ [MPa] | $\tau_{\perp}$ [MPa] | $\tau_{\parallel}$ [MPa] | Ut [%] | $Ut_c$ [%] | Konstruktionsregeln | Status |
|---|---|---|---|---|---|---|---|---|---|---|---|---|---|
| Verschobene Stirnplatte1a | 153-tfl 1 | ◢ 4,0 ◣ | 120 | CO11(5) | 148,5 | 0,0 | 26,4 | -35,3 | -76,6 | 34,1 | 21,7 | OK | OK |
| | | ◢ 4,0 ◣ | 120 | CO11(5) | 88,4 | 0,0 | 18,5 | -31,6 | 38,7 | 20,3 | 14,9 | OK | OK |
| Verschobene Stirnplatte1a | 153-bfl 1 | ◢ 4,0 ◣ | 120 | CO11(38) | 157,5 | 0,0 | -58,4 | -75,4 | -38,0 | 36,2 | 19,3 | OK | OK |
| | | ◢ 4,0 ◣ | 120 | CO11(19) | 263,3 | 0,0 | -79,8 | -85,3 | 117,1 | 60,5 | 31,3 | OK | OK |
| Verschobene Stirnplatte1b | 336-bfl 1 | ◢ 4,0 ◣ | 120 | CO11(31) | 56,4 | 0,0 | -19,3 | -24,5 | -18,3 | 12,9 | 10,0 | OK | OK |
| | | ◢ 4,0 ◣ | 120 | CO11(31) | 103,3 | 0,0 | -60,8 | -43,7 | 20,4 | 23,7 | 14,4 | OK | OK |
| Verschobene Stirnplatte1b | 336-tfl 1 | ◢ 4,0 ◣ | 120 | CO11(31) | 69,7 | 0,0 | -40,7 | 29,0 | -15,1 | 16,0 | 9,8 | OK | OK |
| | | ◢ 4,0 ◣ | 120 | CO11(31) | 50,2 | 0,0 | -21,1 | 19,8 | 17,3 | 11,5 | 8,9 | OK | OK |
| Verschobene Stirnplatte1b | 336-w 1 | ◢ 4,0 ◣ | 228 | CO11(31) | 36,0 | 0,0 | 17,7 | 10,5 | 14,7 | 8,3 | 7,4 | OK | OK |
| | | ◢ 4,0 ◣ | 229 | CO11(31) | 21,8 | 0,0 | 3,4 | -10,6 | 6,5 | 5,0 | 5,0 | OK | OK |
| 153-bfl 1 | STEIFF | ◢ 4,0 ◣ | 42 | CO11(19) | 49,3 | 0,0 | 2,0 | 2,8 | 28,3 | 11,3 | 9,6 | OK | OK |
| | | ◢ 4,0 ◣ | 42 | CO11(12) | 46,9 | 0,0 | 10,4 | -9,4 | -24,6 | 10,8 | 9,5 | OK | OK |
| 153-w 1 | STEIFF | ◢ 4,0 ◣ | 190 | CO11(5) | 47,1 | 0,0 | 18,8 | 19,5 | -15,5 | 10,8 | 7,8 | OK | OK |
| | | ◢ 4,0 ◣ | 190 | CO11(5) | 49,5 | 0,0 | 20,8 | -20,1 | 16,3 | 11,4 | 7,7 | OK | OK |
| 153-tfl 1 | STEIFF | ◢ 4,0 ◣ | 42 | CO11(5) | 41,1 | 0,0 | -6,1 | -2,8 | -23,3 | 9,4 | 9,0 | OK | OK |
| | | ◢ 4,0 ◣ | 42 | CO11(12) | 45,9 | 0,0 | -1,0 | 4,4 | 26,1 | 10,5 | 8,5 | OK | OK |
| Verschobene Stirnplatte1a | STEIFF | ◢ 4,0 ◣ | 219 | CO11(38) | 57,0 | 0,0 | 26,3 | 18,9 | -22,3 | 13,1 | 9,2 | OK | OK |
| | | ◢ 4,0 ◣ | 219 | CO11(19) | 26,2 | 0,0 | -5,8 | 4,2 | -14,1 | 6,0 | 6,0 | OK | OK |

| Position | Kante | $T_w$ [mm] | L [mm] | Lasten | $\sigma_{w,Ed}$ [MPa] | $\varepsilon_{Pl}$ [%] | $\sigma_{\perp}$ [MPa] | $\tau_{\perp}$ [MPa] | $\tau_{\parallel}$ [MPa] | Ut [%] | $Ut_c$ [%] | Konstruktionsregeln | Status |
|---|---|---|---|---|---|---|---|---|---|---|---|---|---|
| 153-bfl 1 | Rippe1 | ◢ 4,0 ◣ | 42 | CO11(5) | 41,2 | 0,0 | -7,5 | -7,1 | -22,3 | 9,5 | 7,1 | OK | OK |
| | | ◢ 4,0 ◣ | 42 | CO11(5) | 41,1 | 0,0 | -5,6 | 6,0 | 22,7 | 9,4 | 7,3 | OK | OK |
| 153-w 1 | Rippe1 | ◢ 4,0 ◣ | 190 | CO11(5) | 39,4 | 0,0 | 19,9 | 19,4 | -2,9 | 9,0 | 7,3 | OK | OK |
| | | ◢ 4,0 ◣ | 190 | CO11(5) | 37,6 | 0,0 | -16,6 | 17,0 | 9,4 | 8,6 | 7,2 | OK | OK |
| 153-tfl 1 | Rippe1 | ◢ 4,0 ◣ | 42 | CO11(5) | 43,7 | 0,0 | 3,7 | 3,8 | -24,8 | 10,0 | 9,3 | OK | OK |
| | | ◢ 4,0 ◣ | 42 | CO11(5) | 44,0 | 0,0 | 3,9 | -3,8 | 25,0 | 10,1 | 9,4 | OK | OK |
| Stirnblech1 | 233 | ◢ 4,0 | 411 | CO11(31) | 86,8 | 0,0 | 63,7 | -22,3 | 25,7 | 19,9 | 11,3 | OK | OK |

**Bemessungsdaten**

| Material | $f_u$ [MPa] | $\beta_w$ [-] | $\sigma_{w,Rd}$ [MPa] | 0.9 σ [MPa] |
|---|---|---|---|---|
| S 355 | 490,0 | 0,90 | 435,6 | 352,8 |

**Erläuterung von Symbolen**

| | |
|---|---|
| $T_w$ | Nahtdicke a |
| L | Länge |
| $\sigma_{w,Ed}$ | Vergleichsspannung |
| $\varepsilon_{Pl}$ | Dehnung |
| $\sigma_{\perp}$ | Senkrechte Spannung |
| $\tau_{\perp}$ | Scherspannung senkrecht zur Schweißnahtachse |
| $\tau_{\parallel}$ | Scherspannung parallel zur Schweißnahtachse |
| Ut | Ausnutzung |
| $Ut_c$ | Schätzung der Schweißnahtkapazität |
| ◢ | Kehlnaht |
| $f_u$ | Grenzfestigkeit der Schweißnaht |
| $\beta_w$ | Korrelationsfaktor nach EN 1993-1-8 Tab. 4.1 |
| $\sigma_{w,Rd}$ | Tragfähigkeit der Schweißnaht |
| 0.9 σ | Senkrechter Spannungswiderstand - 0.9*fu / γM2 |

## Beulen

**Die Beulanalyse wurde nicht berechnet.**

## Normeinstellungen

| Position | Wert | Einheit | Bezug |
|---|---|---|---|
| Sicherheitsfaktor $\gamma_{M0}$ | 1,00 | - | EN 1993-1-1 – 6.1 |
| Sicherheitsfaktor $\gamma_{M1}$ | 1,00 | - | EN 1993-1-1 – 6.1 |
| Sicherheitsfaktor $\gamma_{M2}$ | 1,25 | - | EN 1993-1-1 – 6.1 |
| Sicherheitsfaktor $\gamma_{M3}$ | 1,25 | - | EN 1993-1-8 – Table 2.1 |
| Sicherheitsfaktor $\gamma_{C}$ | 1,50 | - | EN 1992-1-1 – 2.4.2.4 |
| Sicherheitsfaktor $\gamma_{Inst}$ | 1,20 | - | EN 1992-4 – Table 4.1 |
| Verbindungskoeffizient βj | 0,67 | - | EN 1993-1-8 – 6.2.5(7) |
| Wirksame Fläche - Einfluss der Netzgröße | 0,10 | - | |
| Reibungsbeiwert - Beton | 0,25 | - | EN 1993-1-8 |
| Reibungskoeffizient bei gleitfesten Verbindungen | 0,30 | - | EN 1993-1-8 – Table 3.7 |
| Plastische Dehnung - Grenzwert | 0,05 | - | EN 1993-1-5 |
| Konstruktionsregeln | Ja | | |
| Distance between bolts [d0] | 2,20 | - | EN 1993-1-8 – Table 3.3 |
| Distance between bolts and edge [d0] | 1,20 | - | EN 1993-1-8 – Table 3.3 |
| Nachweis der Tragfähigkeit bei Betonausbruch | Beide | | |
| Berechnetes αb für Lochleibungsnachweis anwenden. | Ja | | EN 1993-1-8 – Table 3.4 |
| Gerissener Beton | Ja | | EN 1992-4 |
| Überprüfen der lokalen Verformung | Ja | | |
| Lokale Verformung - Grenzwert | 0,03 | - | CIDECT DG 1, 3 – 1.1 |
| Geometrische Nichtlinearität (GMNA) | Ja | | Analyse mit großen Verformungen für Verbindungen mit Hohlprofilen |
| Ausgesteiftes System | Nein | | EN 1993-1-8 – 5.2.2.5 |

| | |
|---|---|
| **Projekt:** | **IdeaStatiCa-Stadion_Fazanerija_JK-6_BR - 1431** |
| **Projektnummer:** | **Detajl D8-O6** |
| **Autor:** | **mag. Igor Gorup dipl. ing.** |

## Projektdaten

| | |
|---|---|
| Projektname | IdeaStatiCa-Stadion_Fazanerija_JK-6_BR - 1431 |
| Projektnummer | Detajl D8-O6 |
| Autor | mag. Igor Gorup dipl. ing. |
| Beschreibung | |
| Datum | 18.06.2025 |
| Norm | EN |

## Material

| | |
|---|---|
| Stahl | Baustahl S 355, Baustahl S 235, S 355 |

# Projektposition 1431

## Bemessung

| | |
|---|---|
| Name | 1431 |
| Beschreibung | |
| Berechnung | Spannung, Dehnung/ Lasten im Gleichgewicht |

### Bauteile

#### Geometrie

| Name | Querschnitt | β – Rotation [°] | Y - Rotation [°] | α - Rotation [°] | Abstand ex [mm] | Abstand ey [mm] | Abstand ez [mm] |
|---|---|---|---|---|---|---|---|
| 229 | 24 - IPE240 | 0,0 | 0,0 | -180,0 | 0 | 0 | 0 |
| 358 | 795 - RHS80x80 | 4,4 | 90,0 | 175,6 | 0 | -20 | 0 |

#### Auflager und Kräfte

| Name | Auflager | Kräfte in | X [mm] |
|---|---|---|---|
| 229 / anfang | N-Vy-Vz-Mx-My-Mz | Position | 0 |
| 229 / ende | | Position | 0 |
| 358 / ende | | Position | 0 |

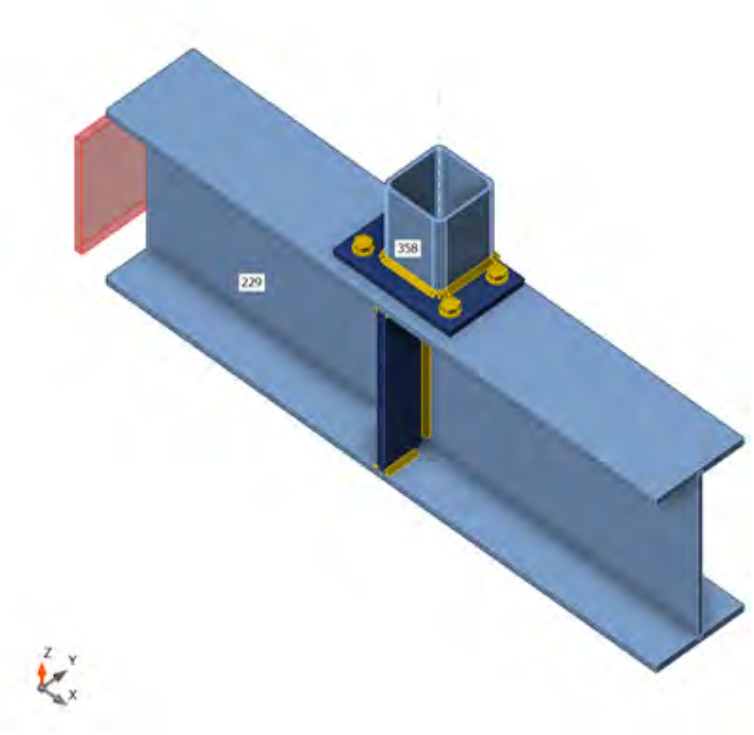


### Querschnitte

| Name | Material |
|---|---|
| 24 - IPE240 | Baustahl S 355 |
| 795 - RHS80x80 | Baustahl S 355 |

## Schrauben

| Name | Durchmesser [mm] | $f_y$ [MPa] | $f_u$ [MPa] | Bruttofläche [$mm^2$] |
|---|---|---|---|---|
| M12 8.8 | 12 | 640,0 | 800,0 | 113 |

## Lasteinwirkungen (Kräfte im Gleichgewicht)

| Name | Bauteil | N [kN] | Vy [kN] | Vz [kN] | Mx [kNm] | My [kNm] | Mz [kNm] |
|---|---|---|---|---|---|---|---|
| CO11(12) | 229 / Anfang | 0,1 | 0,8 | -15,1 | 0,0 | -29,3 | 1,3 |
| | 229 / Ende | 0,2 | -0,7 | -1,8 | 0,1 | 29,0 | -1,2 |
| | 358 / Ende | -16,9 | -0,1 | -0,3 | 0,0 | 0,3 | -0,1 |
| CO11(13) | 229 / Anfang | 0,9 | 0,2 | -9,6 | 0,0 | -12,5 | 1,7 |
| | 229 / Ende | -0,6 | -0,4 | 1,8 | 0,0 | 12,2 | -1,6 |
| | 358 / Ende | -7,8 | 0,3 | -0,3 | 0,0 | 0,3 | 0,0 |
| CO11(14) | 229 / Anfang | -8,7 | 0,3 | -12,5 | 0,0 | -20,8 | -1,6 |
| | 229 / Ende | 9,3 | 0,4 | 3,5 | 0,1 | 19,8 | 1,6 |
| | 358 / Ende | -9,0 | -0,7 | -0,7 | 0,0 | 1,0 | -0,1 |
| CO9(15) | 229 / Anfang | 5,8 | -1,0 | 10,9 | 0,0 | -10,5 | -1,1 |
| | 229 / Ende | -6,8 | 1,1 | -14,1 | 0,0 | 12,2 | 1,1 |
| | 358 / Ende | -3,2 | -0,1 | 1,0 | 0,0 | -1,7 | 0,0 |
| CO11(16) | 229 / Anfang | -3,9 | 0,8 | -18,0 | 0,0 | -19,4 | 1,9 |
| | 229 / Ende | 4,8 | -0,8 | 6,7 | 0,1 | 18,0 | -1,9 |
| | 358 / Ende | -11,3 | 0,0 | -0,9 | 0,1 | 1,4 | -0,1 |
| CO11(17) | 229 / Anfang | -8,4 | 0,2 | -10,7 | 0,0 | -17,8 | -1,6 |
| | 229 / Ende | 9,1 | 0,4 | 4,7 | 0,1 | 16,7 | 1,5 |
| | 358 / Ende | -6,0 | -0,6 | -0,7 | 0,0 | 1,0 | -0,1 |
| CO11(18) | 229 / Anfang | -3,3 | 0,6 | -16,7 | 0,0 | -15,2 | 1,8 |
| | 229 / Ende | 4,1 | -0,7 | 6,0 | 0,0 | 14,0 | -1,8 |
| | 358 / Ende | -10,8 | 0,1 | -0,8 | 0,1 | 1,2 | 0,0 |
| CO11(19) | 229 / Anfang | -7,3 | 0,6 | -14,5 | 0,0 | -24,3 | -1,0 |
| | 229 / Ende | 7,9 | 0,0 | 2,1 | 0,1 | 23,3 | 1,0 |
| | 358 / Ende | -12,4 | -0,6 | -0,7 | 0,0 | 1,0 | -0,1 |
| CO11(20) | 229 / Anfang | -3,9 | 0,6 | -15,8 | 0,0 | -16,2 | 1,9 |
| | 229 / Ende | 4,8 | -0,8 | 7,9 | 0,0 | 14,8 | -1,8 |
| | 358 / Ende | -7,9 | 0,1 | -0,9 | 0,0 | 1,4 | 0,0 |
| CO11(21) | 229 / Anfang | -3,8 | -0,2 | -5,2 | 0,0 | -18,8 | -1,6 |
| | 229 / Ende | 3,8 | 0,6 | -1,2 | 0,1 | 18,7 | 1,5 |
| | 358 / Ende | -6,4 | -0,4 | -0,1 | 0,0 | 0,0 | -0,1 |
| CO11(3) | 229 / Anfang | -4,6 | 1,1 | -15,6 | 0,0 | -25,2 | 0,2 |
| | 229 / Ende | 5,3 | -0,6 | 1,8 | 0,1 | 24,2 | -0,1 |
| | 358 / Ende | -13,7 | -0,4 | -0,7 | 0,0 | 1,0 | -0,1 |
| CO11(4) | 229 / Anfang | -4,1 | 1,0 | -18,3 | 0,0 | -23,6 | 1,2 |
| | 229 / Ende | 4,9 | -0,8 | 4,1 | 0,1 | 22,4 | -1,2 |
| | 358 / Ende | -14,3 | -0,2 | -0,8 | 0,0 | 1,2 | -0,1 |
| CO11(5) | 229 / Anfang | 0,1 | 0,6 | -14,8 | 0,0 | -24,7 | 1,9 |
| | 229 / Ende | 0,3 | -0,7 | 1,2 | 0,1 | 24,1 | -1,9 |
| | 358 / Ende | -13,6 | 0,1 | -0,4 | 0,0 | 0,5 | 0,0 |
| CO11(6) | 229 / Anfang | -0,5 | 0,8 | -11,4 | 0,0 | -30,9 | 0,1 |
| | 229 / Ende | 0,6 | -0,4 | -4,5 | 0,1 | 30,9 | 0,0 |
| | 358 / Ende | -15,9 | -0,3 | -0,1 | 0,0 | 0,0 | -0,1 |
| CO11(8) | 229 / Anfang | -3,8 | -0,1 | -6,9 | 0,0 | -22,1 | -1,6 |
| | 229 / Ende | 3,9 | 0,6 | -2,7 | 0,1 | 22,1 | 1,6 |

| Name | Bauteil | N [kN] | Vy [kN] | Vz [kN] | Mx [kNm] | My [kNm] | Mz [kNm] |
|---|---|---|---|---|---|---|---|
| | 358 / Ende | -9,6 | -0,5 | -0,1 | 0,0 | 0,0 | -0,1 |
| CO11(10) | 229 / Anfang | -0,3 | 0,8 | -12,2 | 0,0 | -31,0 | 0,2 |
| | 229 / Ende | 0,4 | -0,5 | -4,3 | 0,1 | 31,0 | -0,1 |
| | 358 / Ende | -16,5 | -0,3 | -0,1 | 0,0 | 0,0 | -0,1 |
| CO11(11) | 229 / Anfang | -4,4 | 0,1 | -9,2 | 0,0 | -26,6 | -1,6 |
| | 229 / Ende | 4,5 | 0,5 | -2,5 | 0,1 | 26,5 | 1,6 |
| | 358 / Ende | -11,7 | -0,6 | -0,1 | 0,0 | 0,1 | -0,1 |

### Fehlende Lasten

| Name | X [kN] | Y [kN] | Z [kN] | Mx [kNm] | My [kNm] | Mz [kNm] |
|---|---|---|---|---|---|---|
| CO11(12) | 0,0 | 0,0 | 0,0 | -0,3 | 0,0 | 0,0 |
| CO11(13) | 0,0 | 0,0 | 0,0 | -0,2 | 0,0 | 0,0 |
| CO11(14) | 0,0 | 0,0 | 0,0 | -0,2 | 0,0 | 0,0 |
| CO9(15) | -0,1 | 0,0 | 0,0 | -0,1 | 0,0 | 0,0 |
| CO11(16) | 0,0 | 0,0 | 0,0 | -0,2 | 0,0 | 0,0 |
| CO11(17) | 0,0 | 0,0 | 0,0 | -0,1 | 0,0 | 0,0 |
| CO11(18) | 0,0 | 0,0 | 0,0 | -0,2 | 0,0 | 0,0 |
| CO11(19) | 0,0 | 0,0 | 0,0 | -0,2 | 0,0 | 0,0 |
| CO11(20) | 0,0 | 0,0 | 0,0 | -0,2 | 0,0 | 0,0 |
| CO11(21) | 0,0 | 0,0 | 0,0 | -0,1 | 0,0 | 0,0 |
| CO11(3) | 0,0 | 0,0 | 0,0 | -0,3 | 0,0 | 0,0 |
| CO11(4) | 0,0 | 0,0 | 0,0 | -0,3 | 0,0 | 0,0 |
| CO11(5) | 0,0 | 0,0 | 0,0 | -0,3 | 0,0 | 0,0 |
| CO11(6) | 0,0 | 0,0 | 0,0 | -0,3 | 0,0 | 0,0 |
| CO11(8) | 0,0 | 0,0 | 0,0 | -0,2 | 0,0 | 0,0 |
| CO11(10) | 0,0 | 0,0 | 0,0 | -0,3 | 0,0 | 0,0 |
| CO11(11) | 0,0 | 0,0 | 0,0 | -0,2 | 0,0 | 0,0 |

## Nachweis

### Übersicht

| Name | Wert | Nachweisstatus |
|---|---|---|
| Berechnung | 100,0% | OK |
| Platten | 0,0 < 5,0% | OK |
| Lokale Verformung | 0,0 < 3% | OK |
| Schrauben | 19,7 < 100% | OK |
| Schweißnähte | 51,2 < 100% | OK |
| Beulen | Nicht berechnet | |

## Platten

| Name | Material | $t_p$ [mm] | Lasten | $\sigma_{Ed}$ [MPa] | $\varepsilon_{Pl}$ [%] | $\sigma_{c,Ed}$ [MPa] | Status |
|---|---|---|---|---|---|---|---|
| 229-bfl 1 | Baustahl S 355 | 9,8 | CO9(15) | 142,4 | 0,0 | 15,5 | OK |
| 229-tfl 1 | Baustahl S 355 | 9,8 | CO11(12) | 139,7 | 0,0 | 0,0 | OK |
| 229-w 1 | Baustahl S 355 | 6,2 | CO11(10) | 87,9 | 0,0 | 0,0 | OK |
| 358 | Baustahl S 355 | 4,0 | CO9(15) | 167,9 | 0,0 | 0,0 | OK |
| Stirnblech1 | S 355 | 10,0 | CO9(15) | 129,0 | 0,0 | 37,1 | OK |
| Rippe1a | S 355 | 10,0 | CO11(12) | 23,6 | 0,0 | 0,0 | OK |
| Rippe1b | S 355 | 10,0 | CO11(16) | 47,2 | 0,0 | 0,0 | OK |

### Bemessungsdaten

| Material | $f_y$ [MPa] | $\varepsilon_{lim}$ [%] |
|---|---|---|
| Baustahl S 355 | 355,0 | 5,0 |
| S 355 | 355,0 | 5,0 |

### Erläuterung von Symbolen

| | |
|---|---|
| $t_p$ | Plattendicke |
| $\sigma_{Ed}$ | Vergleichsspannung |
| $\varepsilon_{Pl}$ | Plastische Dehnung |
| $\sigma_{c,Ed}$ | Kontaktspannung |
| $f_y$ | Streckgrenze |
| $\varepsilon_{lim}$ | Grenzwert plastische Dehnung |

## Lokale Verformung

| Name | $d_0$ [mm] | Lasten | $\delta$ [mm] | $\delta_{lim}$ [mm] | $\delta/d_0$ [%] | Nachweisstatus |
|---|---|---|---|---|---|---|
| 358 | 80 | CO11(11) | 0 | 2 | 0,0 | OK |

### Erläuterung von Symbolen

| | |
|---|---|
| $d_0$ | Querschnittsgröße |
| $\delta$ | Lokale Verformung im Querschnitt |
| $\delta_{lim}$ | Zulässige Verformung |

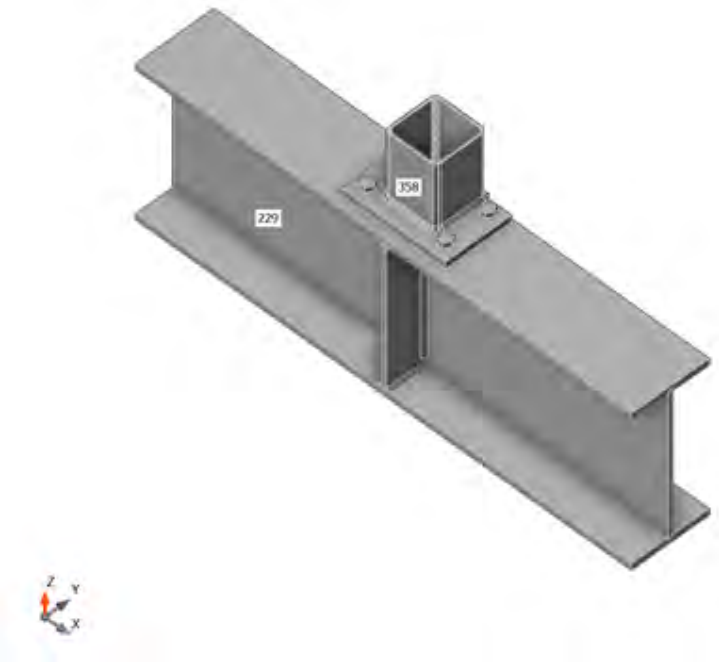


*Gesamt, CO9(15)*

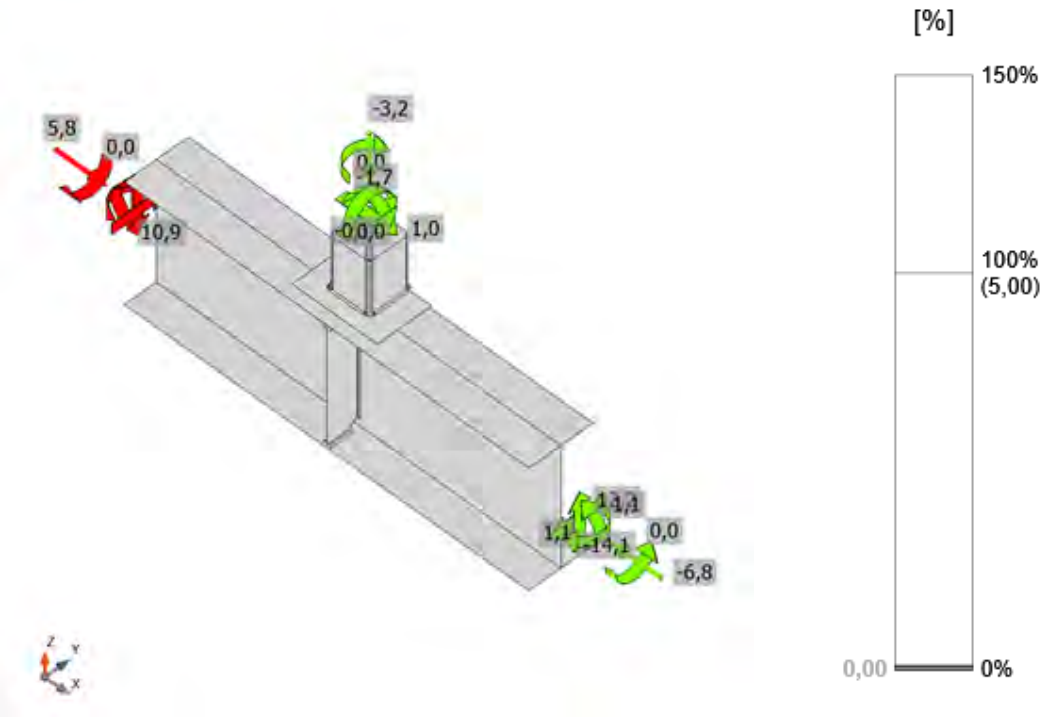


*Dehnung, CO9(15)*

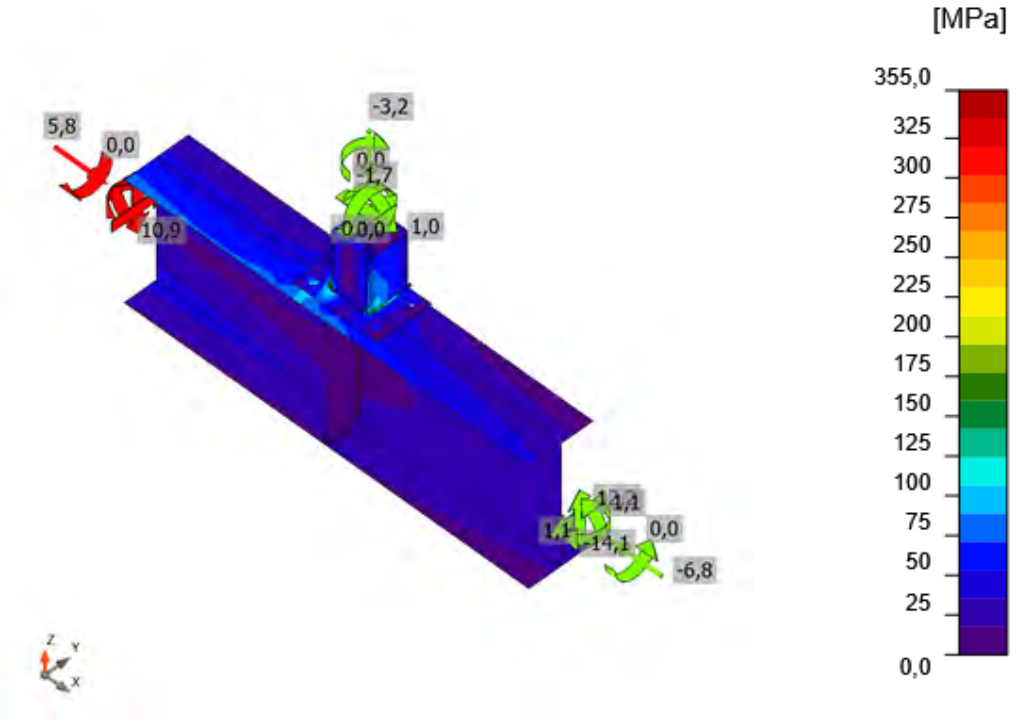


*Vergleichsspannung, CO9(15)*

## Schrauben

| Form | Position | Klasse | Lasten | $F_{t,Ed}$ [kN] | $F_{v,Ed}$ [kN] | $F_{b,Rd}$ [kN] | $Ut_t$ [%] | $Ut_s$ [%] | $Ut_{ts}$ [%] | Konstruktionsregeln | Status |
|---|---|---|---|---|---|---|---|---|---|---|---|
| 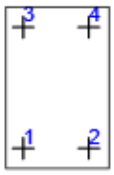 | B1 | M12 8.8 - 1 | CO9(15) | 7,6 | 0,3 | 59,1 | 15,6 | 0,9 | 12,1 | OK | OK |
| | B2 | M12 8.8 - 1 | CO9(15) | 9,6 | 0,2 | 60,3 | 19,7 | 0,7 | 14,7 | OK | OK |
| | B3 | M12 8.8 - 1 | CO11(20) | 4,6 | 0,4 | 71,3 | 9,4 | 1,2 | 7,9 | OK | OK |
| | B4 | M12 8.8 - 1 | CO11(20) | 7,0 | 0,2 | 60,3 | 14,4 | 0,7 | 11,0 | OK | OK |



**Bemessungsdaten**

| Klasse | $F_{t,Rd}$ [kN] | $B_{p,Rd}$ [kN] | $F_{v,Rd}$ [kN] |
|---|---|---|---|
| M12 8.8 - 1 | 48,6 | 137,7 | 32,4 |

**Erläuterung von Symbolen**

| | |
|---|---|
| $F_{t,Ed}$ | Zugkraft |
| $F_{v,Ed}$ | Resultierende der Schraubenscherkräfte Vy und Vz in Scherebenen |
| $F_{b,Rd}$ | Lochleibungstragfähigkeit der Platte nach EN 1993-1-8 Tab. 3.4 |
| $Ut_t$ | Ausnutzung unter Zug |
| $Ut_s$ | Ausnutzung unter Schub |
| $Ut_{ts}$ | Interaktion von Zug und Schub EN_1993-1-8 Tabelle 3.4 |
| $F_{t,Rd}$ | Zugtragfähigkeit der Schraube nach EN 1993-1-8 Tabelle 3.4 |
| $B_{p,Rd}$ | Durchstanztragfähigkeit nach EN 1993-1-8 Tabelle 3.4 |
| $F_{v,Rd}$ | Schertragfähigkeit der Schraube nach EN 1993-1-8 Tabelle 3.4 |

## Schweißnähte

| Position | Kante | $T_w$ [mm] | L [mm] | Lasten | $\sigma_{w,Ed}$ [MPa] | $\varepsilon_{Pl}$ [%] | $\sigma_{\perp}$ [MPa] | $\tau_{\perp}$ [MPa] | $\tau_{\parallel}$ [MPa] | Ut [%] | $Ut_c$ [%] | Konstruktionsregeln | Status |
|---|---|---|---|---|---|---|---|---|---|---|---|---|---|
| 229-bfl 1 | Rippe1a | ◢ 4,0 ◣ | 42 | CO11(10) | 25,0 | 0,0 | 10,4 | 10,0 | 8,4 | 5,7 | 5,7 | OK | OK |
| | | ◢ 4,0 ◣ | 42 | CO11(11) | 25,3 | 0,0 | -3,7 | 2,6 | 14,2 | 5,8 | 5,8 | OK | OK |
| 229-w 1 | Rippe1a | ◢ 4,0 ◣ | 190 | CO11(10) | 25,7 | 0,0 | -10,7 | -9,8 | -9,3 | 5,9 | 5,9 | OK | OK |
| | | ◢ 4,0 ◣ | 190 | CO11(10) | 23,1 | 0,0 | -10,7 | 11,6 | 2,0 | 5,3 | 5,3 | OK | OK |
| 229-tfl 1 | Rippe1a | ◢ 4,0 ◣ | 42 | CO11(12) | 30,8 | 0,0 | -4,3 | -0,5 | -17,6 | 7,1 | 7,1 | OK | OK |
| | | ◢ 4,0 ◣ | 42 | CO11(12) | 30,0 | 0,0 | 9,9 | -6,0 | 15,2 | 6,9 | 6,9 | OK | OK |
| 229-bfl 1 | Rippe1b | ◢ 4,0 ◣ | 42 | CO11(4) | 52,5 | 0,0 | -34,3 | -19,9 | 11,4 | 12,1 | 9,0 | OK | OK |
| | | ◢ 4,0 ◣ | 42 | CO11(10) | 56,2 | 0,0 | -29,2 | 27,7 | 1,2 | 12,9 | 8,1 | OK | OK |
| 229-w 1 | Rippe1b | ◢ 4,0 ◣ | 190 | CO11(10) | 32,7 | 0,0 | -8,4 | -8,2 | -16,3 | 7,5 | 7,5 | OK | OK |
| | | ◢ 4,0 ◣ | 190 | CO11(10) | 26,1 | 0,0 | -10,5 | 10,8 | 8,6 | 6,0 | 6,0 | OK | OK |
| 229-tfl 1 | Rippe1b | ◢ 4,0 ◣ | 42 | CO11(10) | 26,6 | 0,0 | -12,4 | -11,9 | 6,5 | 6,1 | 6,1 | OK | OK |
| | | ◢ 4,0 ◣ | 42 | CO11(11) | 21,4 | 0,0 | 6,6 | -4,1 | 11,0 | 4,9 | 4,9 | OK | OK |
| Stirnblech1 | 358 | ◢ 4,0 | 281 | CO9(15) | 223,1 | 0,0 | 161,1 | -88,8 | -7,1 | 51,2 | 31,6 | OK | OK |

**Bemessungsdaten**

| Material | $f_u$ [MPa] | $\beta_w$ [-] | $\sigma_{w,Rd}$ [MPa] | 0.9 σ [MPa] |
|---|---|---|---|---|
| S 355 | 490,0 | 0,90 | 435,6 | 352,8 |

**Erläuterung von Symbolen**

| | |
|---|---|
| $T_w$ | Nahtdicke a |
| L | Länge |
| $\sigma_{w,Ed}$ | Vergleichsspannung |
| $\varepsilon_{Pl}$ | Dehnung |
| $\sigma_{\perp}$ | Senkrechte Spannung |
| $\tau_{\perp}$ | Scherspannung senkrecht zur Schweißnahtachse |
| $\tau_{\parallel}$ | Scherspannung parallel zur Schweißnahtachse |
| Ut | Ausnutzung |
| $Ut_c$ | Schätzung der Schweißnahtkapazität |
| ◢ | Kehlnaht |
| $f_u$ | Grenzfestigkeit der Schweißnaht |
| $\beta_w$ | Korrelationsfaktor nach EN 1993-1-8 Tab. 4.1 |
| $\sigma_{w,Rd}$ | Tragfähigkeit der Schweißnaht |
| 0.9 σ | Senkrechter Spannungswiderstand - 0.9*fu / γM2 |

### Beulen

**Die Beulanalyse wurde nicht berechnet.**

## Normeinstellungen

| Position | Wert | Einheit | Bezug |
|---|---|---|---|
| Sicherheitsfaktor $\gamma_{M0}$ | 1,00 | - | EN 1993-1-1 – 6.1 |
| Sicherheitsfaktor $\gamma_{M1}$ | 1,00 | - | EN 1993-1-1 – 6.1 |
| Sicherheitsfaktor $\gamma_{M2}$ | 1,25 | - | EN 1993-1-1 – 6.1 |
| Sicherheitsfaktor $\gamma_{M3}$ | 1,25 | - | EN 1993-1-8 – Table 2.1 |
| Sicherheitsfaktor $\gamma_C$ | 1,50 | - | EN 1992-1-1 – 2.4.2.4 |
| Sicherheitsfaktor $\gamma_{Inst}$ | 1,20 | - | EN 1992-4 – Table 4.1 |
| Verbindungskoeffizient βj | 0,67 | - | EN 1993-1-8 – 6.2.5(7) |
| Wirksame Fläche - Einfluss der Netzgröße | 0,10 | - | |
| Reibungsbeiwert - Beton | 0,25 | - | EN 1993-1-8 |
| Reibungskoeffizient bei gleitfesten Verbindungen | 0,30 | - | EN 1993-1-8 – Table 3.7 |
| Plastische Dehnung - Grenzwert | 0,05 | - | EN 1993-1-5 |
| Konstruktionsregeln | Ja | | |
| Distance between bolts [d0] | 2,20 | - | EN 1993-1-8 – Table 3.3 |
| Distance between bolts and edge [d0] | 1,20 | - | EN 1993-1-8 – Table 3.3 |
| Nachweis der Tragfähigkeit bei Betonausbruch | Beide | | |
| Berechnetes αb für Lochleibungsnachweis anwenden. | Ja | | EN 1993-1-8 – Table 3.4 |
| Gerissener Beton | Ja | | EN 1992-4 |
| Überprüfen der lokalen Verformung | Ja | | |
| Lokale Verformung - Grenzwert | 0,03 | - | CIDECT DG 1, 3 – 1.1 |
| Geometrische Nichtlinearität (GMNA) | Ja | | Analyse mit großen Verformungen für Verbindungen mit Hohlprofilen |
| Ausgesteiftes System | Nein | | EN 1993-1-8 – 5.2.2.5 |

| | |
|---|---|
| **Projekt:** | **IdeaStatiCa-Stadion_Fazanerija_JK-6_BR - 1432** |
| **Projektnummer:** | **Detajl D10-O6** |
| **Autor:** | **mag. Igor Gorup dipl. ing.** |

## Projektdaten

| | |
|---|---|
| Projektname | IdeaStatiCa-Stadion_Fazanerija_JK-6_BR - 1432 |
| Projektnummer | Detajl D10-O6 |
| Autor | mag. Igor Gorup dipl. ing. |
| Beschreibung | |
| Datum | 18.06.2025 |
| Norm | EN |

## Material

| | |
|---|---|
| Stahl | Baustahl S 355, Baustahl S 235, S 355 |

# Projektposition 1432

## Bemessung

| | |
|---|---|
| Name | 1432 |
| Beschreibung | |
| Berechnung | Spannung, Dehnung/ Lasten im Gleichgewicht |

### Bauteile

#### Geometrie

| Name | Querschnitt | β – Rotation [°] | Y - Rotation [°] | α - Rotation [°] | Abstand ex [mm] | Abstand ey [mm] | Abstand ez [mm] |
|---|---|---|---|---|---|---|---|
| 173 | 12 - HEA200 | 0,0 | 90,0 | -180,0 | 0 | 0 | 0 |
| 528 | 795 - RHS80x80 | -90,0 | 34,5 | -180,0 | 0 | 0 | 0 |

#### Auflager und Kräfte

| Name | Auflager | Kräfte in | X [mm] |
|---|---|---|---|
| 173 / anfang | N-Vy-Vz-Mx-My-Mz | Position | 0 |
| 173 / ende | | Position | 0 |
| 528 / ende | | Position | 0 |

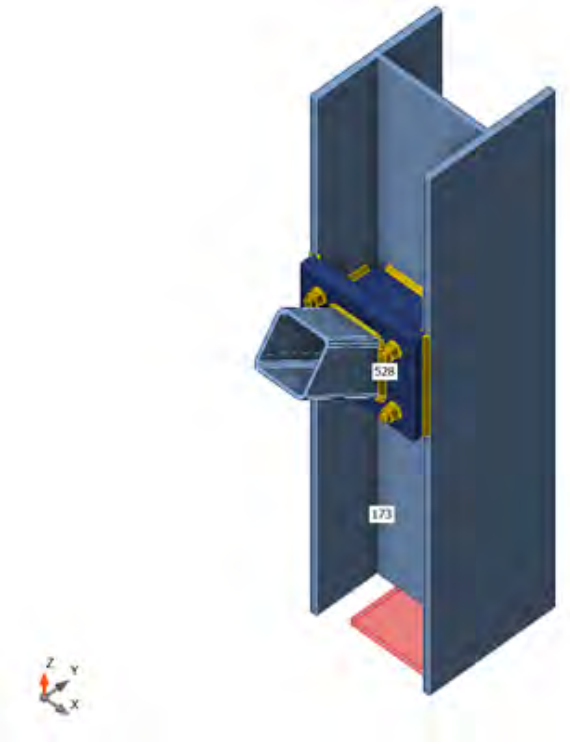


### Querschnitte

| Name | Material |
|---|---|
| 12 - HEA200 | Baustahl S 355 |
| 795 - RHS80x80 | Baustahl S 355 |

## Schrauben

| Name | Durchmesser [mm] | $f_y$ [MPa] | $f_u$ [MPa] | Bruttofläche [$mm^2$] |
|---|---|---|---|---|
| M12 8.8 | 12 | 640,0 | 800,0 | 113 |

## Lasteinwirkungen (Kräfte im Gleichgewicht)

| Name | Bauteil | N [kN] | Vy [kN] | Vz [kN] | Mx [kNm] | My [kNm] | Mz [kNm] |
|---|---|---|---|---|---|---|---|
| CO11(10) | 173 / Anfang | 72,1 | 14,4 | -1,4 | 0,1 | -7,4 | -32,8 |
| | 173 / Ende | -42,0 | 29,7 | 1,2 | -0,1 | 7,3 | 32,8 |
| | 528 / Ende | -53,3 | 0,0 | 0,1 | 0,1 | 0,0 | 0,0 |
| CO11(11) | 173 / Anfang | 71,8 | 14,3 | -1,4 | 0,1 | -7,4 | -32,7 |
| | 173 / Ende | -41,8 | 29,6 | 1,2 | -0,1 | 7,3 | 32,7 |
| | 528 / Ende | -53,2 | 0,0 | 0,1 | 0,1 | 0,0 | 0,0 |
| CO11(12) | 173 / Anfang | 50,9 | 1,4 | -4,6 | -0,1 | -10,6 | -11,9 |
| | 173 / Ende | -42,8 | 10,2 | 4,7 | 0,2 | 10,8 | 11,9 |
| | 528 / Ende | -14,2 | 0,0 | 0,1 | -0,2 | 0,0 | 0,0 |
| CO9(13) | 173 / Anfang | 20,8 | 2,3 | -11,7 | 0,0 | -15,9 | -4,9 |
| | 173 / Ende | -16,0 | 4,7 | 11,6 | -0,1 | 15,7 | 4,9 |
| | 528 / Ende | -8,5 | 0,0 | 0,0 | 0,2 | 0,0 | 0,0 |
| CO11(14) | 173 / Anfang | 59,0 | 3,9 | -1,1 | 0,0 | -6,6 | -17,2 |
| | 173 / Ende | -46,1 | 14,9 | 1,2 | 0,1 | 6,8 | 17,2 |
| | 528 / Ende | -22,8 | 0,0 | 0,1 | -0,2 | 0,0 | 0,0 |
| CO11(15) | 173 / Anfang | 79,6 | 13,3 | -6,3 | 0,0 | -14,4 | -32,3 |
| | 173 / Ende | -50,6 | 29,2 | 6,0 | 0,0 | 14,3 | 32,3 |
| | 528 / Ende | -51,5 | 0,0 | 0,1 | 0,1 | 0,0 | 0,0 |
| CO11(16) | 173 / Anfang | 65,9 | 3,0 | -5,6 | -0,2 | -13,0 | -16,8 |
| | 173 / Ende | -53,8 | 14,4 | 5,7 | 0,3 | 13,2 | 16,8 |
| | 528 / Ende | -21,2 | 0,0 | 0,1 | -0,2 | 0,0 | 0,0 |
| CO11(1) | 173 / Anfang | 84,8 | 12,1 | -7,3 | -0,1 | -16,2 | -31,7 |
| | 173 / Ende | -57,1 | 28,5 | 7,1 | 0,1 | 16,1 | 31,7 |
| | 528 / Ende | -49,1 | 0,0 | 0,1 | 0,1 | 0,0 | 0,0 |
| CO11(2) | 173 / Anfang | 32,2 | -0,8 | -2,9 | 0,0 | -6,7 | -5,3 |
| | 173 / Ende | -29,7 | 4,3 | 2,9 | 0,2 | 6,8 | 5,3 |
| | 528 / Ende | -4,3 | 0,0 | 0,1 | -0,2 | 0,0 | 0,0 |
| CO11(5) | 173 / Anfang | 25,9 | 0,0 | 1,2 | 0,0 | -0,8 | -5,7 |
| | 173 / Ende | -22,5 | 4,8 | -1,2 | 0,1 | 1,0 | 5,7 |
| | 528 / Ende | -5,8 | 0,0 | 0,1 | -0,2 | 0,0 | 0,0 |
| CO11(8) | 173 / Anfang | 75,2 | 5,9 | -7,2 | -0,2 | -15,9 | -22,1 |
| | 173 / Ende | -57,8 | 19,5 | 7,2 | 0,3 | 16,0 | 22,1 |
| | 528 / Ende | -30,8 | 0,0 | 0,1 | -0,1 | 0,0 | 0,0 |
| CO11(9) | 173 / Anfang | 81,5 | 9,3 | -8,4 | -0,2 | -17,9 | -27,4 |
| | 173 / Ende | -58,4 | 24,5 | 8,4 | 0,2 | 17,9 | 27,4 |
| | 528 / Ende | -40,9 | 0,0 | 0,1 | 0,0 | 0,0 | 0,0 |

### Fehlende Lasten

| Name | X [kN] | Y [kN] | Z [kN] | Mx [kNm] | My [kNm] | Mz [kNm] |
|---|---|---|---|---|---|---|
| CO11(10) | -0,2 | -0,2 | -0,2 | 0,0 | 0,0 | 0,0 |
| CO11(11) | -0,2 | -0,2 | -0,2 | 0,0 | 0,0 | 0,0 |
| CO11(12) | 0,1 | 0,0 | 0,0 | 0,0 | 0,0 | 0,0 |
| CO9(13) | -0,1 | 0,0 | 0,0 | 0,0 | 0,0 | 0,0 |
| CO11(14) | 0,1 | 0,0 | -0,1 | 0,0 | 0,0 | 0,0 |
| CO11(15) | -0,2 | -0,2 | -0,2 | 0,0 | 0,0 | 0,0 |
| CO11(16) | 0,1 | 0,0 | 0,0 | 0,0 | 0,0 | 0,0 |
| CO11(1) | -0,1 | -0,1 | -0,2 | 0,0 | 0,0 | 0,0 |
| CO11(2) | 0,0 | 0,0 | 0,0 | 0,0 | 0,0 | 0,0 |
| CO11(5) | 0,0 | 0,0 | 0,0 | 0,0 | 0,0 | 0,0 |
| CO11(8) | 0,1 | -0,1 | -0,1 | 0,0 | 0,0 | 0,0 |
| CO11(9) | 0,0 | -0,1 | -0,1 | 0,0 | 0,0 | 0,0 |

## Nachweis

### Übersicht

| Name | Wert | Nachweisstatus |
|---|---|---|
| Berechnung | 100,0% | OK |
| Platten | 0,0 < 5,0% | OK |
| Lokale Verformung | 0,0 < 3% | OK |
| Schrauben | 25,3 < 100% | OK |
| Schweißnähte | 85,0 < 100% | OK |
| Beulen | Nicht berechnet | |

### Platten

| Name | Material | $t_p$ [mm] | Lasten | $\sigma_{Ed}$ [MPa] | $\varepsilon_{Pl}$ [%] | $\sigma_{c,Ed}$ [MPa] | Status |
|---|---|---|---|---|---|---|---|
| 173-bfl 1 | Baustahl S 355 | 10,0 | CO11(15) | 325,9 | 0,0 | 0,0 | OK |
| 173-tfl 1 | Baustahl S 355 | 10,0 | CO11(10) | 277,8 | 0,0 | 0,0 | OK |
| 173-w 1 | Baustahl S 355 | 6,5 | CO11(9) | 66,7 | 0,0 | 0,0 | OK |
| 528 | Baustahl S 355 | 4,0 | CO11(10) | 95,2 | 0,0 | 0,0 | OK |
| Verschobene Stirnplatte1a | S 355 | 10,0 | CO11(15) | 218,9 | 0,0 | 13,2 | OK |
| Verschobene Stirnplatte1b | S 355 | 10,0 | CO11(10) | 72,0 | 0,0 | 13,6 | OK |
| STEIFF | S 355 | 10,0 | CO11(1) | 49,5 | 0,0 | 0,0 | OK |

#### Bemessungsdaten

| Material | $f_y$ [MPa] | $\varepsilon_{lim}$ [%] |
|---|---|---|
| Baustahl S 355 | 355,0 | 5,0 |
| S 355 | 355,0 | 5,0 |

**Erläuterung von Symbolen**

| | |
|---|---|
| $t_p$ | Plattendicke |
| $\sigma_{Ed}$ | Vergleichsspannung |
| $\varepsilon_{Pl}$ | Plastische Dehnung |
| $\sigma_{c,Ed}$ | Kontaktspannung |
| $f_y$ | Streckgrenze |
| $\varepsilon_{lim}$ | Grenzwert plastische Dehnung |

## Lokale Verformung

| Name | $d_0$ [mm] | Lasten | $\delta$ [mm] | $\delta_{lim}$ [mm] | $\delta/d_0$ [%] | Nachweisstatus |
|---|---|---|---|---|---|---|
| 528 | 80 | CO11(9) | 0 | 2 | 0,0 | OK |

**Erläuterung von Symbolen**

| | |
|---|---|
| $d_0$ | Querschnittsgröße |
| $\delta$ | Lokale Verformung im Querschnitt |
| $\delta_{lim}$ | Zulässige Verformung |

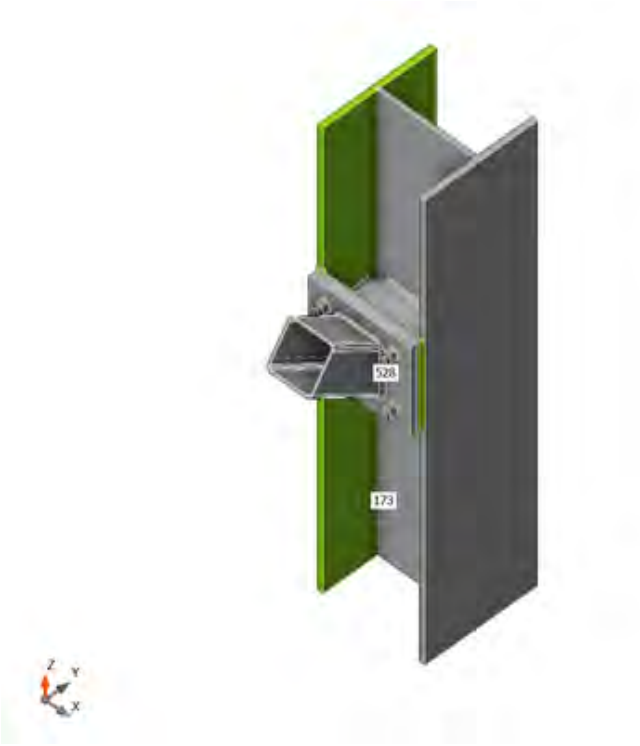


*Gesamt, CO11(15)*

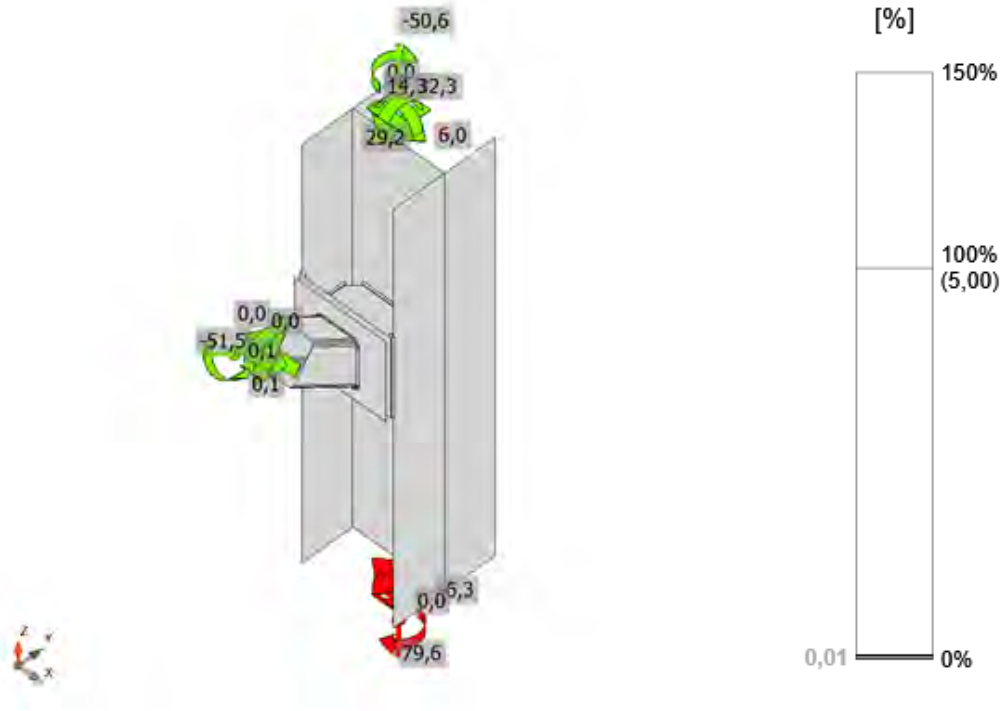


*Dehnung, CO11(15)*

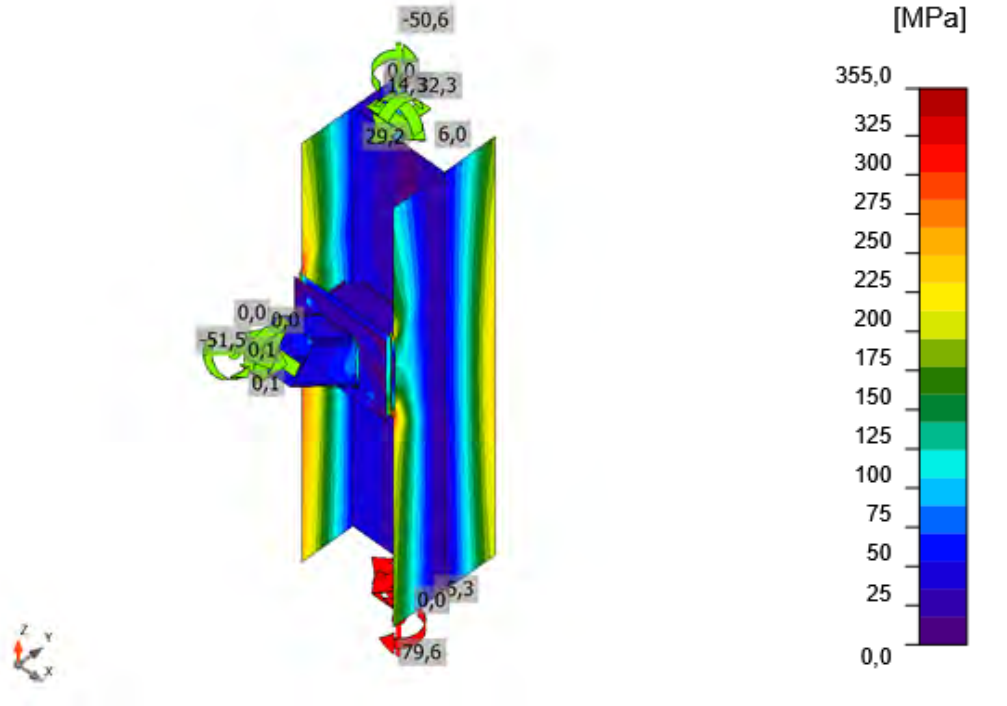


*Vergleichsspannung, CO11(15)*

## Schrauben

| Form | Position | Klasse | Lasten | $F_{t,Ed}$ [kN] | $F_{v,Ed}$ [kN] | $F_{b,Rd}$ [kN] | $Ut_t$ [%] | $Ut_s$ [%] | $Ut_{ts}$ [%] | Konstruktionsregeln | Status |
|---|---|---|---|---|---|---|---|---|---|---|---|
| 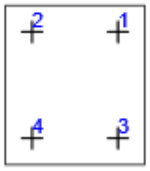 | B1 | M12 8.8 - 1 | CO11(10) | 0,0 | 7,0 | 90,5 | 0,0 | 21,7 | 21,7 | OK | OK |
| | B2 | M12 8.8 - 1 | CO11(10) | 0,0 | 7,6 | 90,5 | 0,0 | 23,4 | 23,4 | OK | OK |
| | B3 | M12 8.8 - 1 | CO11(10) | 0,1 | 7,6 | 90,5 | 0,2 | 23,4 | 23,5 | OK | OK |
| | B4 | M12 8.8 - 1 | CO11(10) | 0,0 | 8,2 | 90,5 | 0,0 | 25,3 | 25,3 | OK | OK |



**Bemessungsdaten**

| Klasse | $F_{t,Rd}$ [kN] | $B_{p,Rd}$ [kN] | $F_{v,Rd}$ [kN] |
|---|---|---|---|
| M12 8.8 - 1 | 48,6 | 140,5 | 32,4 |

**Erläuterung von Symbolen**

| | |
|---|---|
| $F_{t,Ed}$ | Zugkraft |
| $F_{v,Ed}$ | Resultierende der Schraubenscherkräfte Vy und Vz in Scherebenen |
| $F_{b,Rd}$ | Lochleibungstragfähigkeit der Platte nach EN 1993-1-8 Tab. 3.4 |
| $Ut_t$ | Ausnutzung unter Zug |
| $Ut_s$ | Ausnutzung unter Schub |
| $Ut_{ts}$ | Interaktion von Zug und Schub EN_1993-1-8 Tabelle 3.4 |
| $F_{t,Rd}$ | Zugtragfähigkeit der Schraube nach EN 1993-1-8 Tabelle 3.4 |
| $B_{p,Rd}$ | Durchstanztragfähigkeit nach EN 1993-1-8 Tabelle 3.4 |
| $F_{v,Rd}$ | Schertragfähigkeit der Schraube nach EN 1993-1-8 Tabelle 3.4 |

## Schweißnähte

| Position | Kante | $T_w$ [mm] | L [mm] | Lasten | $\sigma_{w,Ed}$ [MPa] | $\varepsilon_{Pl}$ [%] | $\sigma_{\perp}$ [MPa] | $\tau_{\perp}$ [MPa] | $\tau_{\parallel}$ [MPa] | Ut [%] | $Ut_c$ [%] | Konstruktionsregeln | Status |
|---|---|---|---|---|---|---|---|---|---|---|---|---|---|
| Verschobene Stirnplatte1a | 173-tfl 1 | ◢ 4,0 ◣ | 156 | CO11(10) | 301,6 | 0,0 | -34,2 | 81,3 | -152,7 | 69,2 | 37,4 | OK | OK |
| | | ◢ 4,0 ◣ | 156 | CO11(10) | 314,4 | 0,0 | -92,8 | 108,8 | 135,1 | 72,2 | 39,7 | OK | OK |
| Verschobene Stirnplatte1a | 173-bfl 1 | ◢ 4,0 ◣ | 156 | CO11(10) | 370,2 | 0,0 | -116,8 | 124,6 | 160,0 | 85,0 | 48,4 | OK | OK |
| | | ◢ 4,0 ◣ | 156 | CO11(1) | 368,4 | 0,0 | -49,6 | 101,4 | -184,8 | 84,6 | 50,0 | OK | OK |
| 173-bfl 1 | STEIFF | ◢ 4,0 ◣ | 79 | CO11(1) | 69,9 | 0,0 | 11,0 | 6,4 | -39,3 | 16,0 | 9,5 | OK | OK |
| | | ◢ 4,0 ◣ | 79 | CO11(15) | 66,3 | 0,0 | 4,9 | -9,1 | 37,1 | 15,2 | 9,4 | OK | OK |
| 173-w 1 | STEIFF | ◢ 4,0 ◣ | 134 | CO11(10) | 41,9 | 0,0 | -2,0 | -0,9 | -24,2 | 9,6 | 7,9 | OK | OK |
| | | ◢ 4,0 ◣ | 134 | CO11(15) | 42,4 | 0,0 | -1,5 | 1,8 | 24,4 | 9,7 | 7,8 | OK | OK |
| 173-tfl 1 | STEIFF | ◢ 4,0 ◣ | 79 | CO11(10) | 58,2 | 0,0 | 9,4 | 5,1 | 32,8 | 13,4 | 10,4 | OK | OK |
| | | ◢ 4,0 ◣ | 79 | CO11(10) | 54,8 | 0,0 | 3,0 | -7,4 | -30,7 | 12,6 | 10,3 | OK | OK |
| Verschobene Stirnplatte1a | STEIFF | ◢ 4,0 ◣ | 168 | CO11(10) | 67,4 | 0,0 | -32,1 | -32,6 | 10,2 | 15,5 | 10,6 | OK | OK |
| | | ◢ 4,0 ◣ | 168 | CO11(10) | 74,7 | 0,0 | -37,0 | 36,4 | -8,6 | 17,1 | 12,5 | OK | OK |
| Verschobene Stirnplatte1b | 528 | ◢ 4,0 | 320 | CO11(10) | 126,7 | 0,0 | -33,3 | 55,5 | -43,6 | 29,1 | 18,1 | OK | OK |

**Bemessungsdaten**

| Material | $f_u$ [MPa] | $\beta_w$ [-] | $\sigma_{w,Rd}$ [MPa] | 0.9 σ [MPa] |
|---|---|---|---|---|
| S 355 | 490,0 | 0,90 | 435,6 | 352,8 |

**Erläuterung von Symbolen**

| | |
|---|---|
| $T_w$ | Nahtdicke a |
| L | Länge |
| $\sigma_{w,Ed}$ | Vergleichsspannung |
| $\varepsilon_{Pl}$ | Dehnung |
| $\sigma_{\perp}$ | Senkrechte Spannung |
| $\tau_{\perp}$ | Scherspannung senkrecht zur Schweißnahtachse |
| $\tau_{\parallel}$ | Scherspannung parallel zur Schweißnahtachse |
| Ut | Ausnutzung |
| $Ut_c$ | Schätzung der Schweißnahtkapazität |
| ◢ | Kehlnaht |
| $f_u$ | Grenzfestigkeit der Schweißnaht |
| $\beta_w$ | Korrelationsfaktor nach EN 1993-1-8 Tab. 4.1 |
| $\sigma_{w,Rd}$ | Tragfähigkeit der Schweißnaht |
| 0.9 σ | Senkrechter Spannungswiderstand - 0.9*fu / γM2 |

### Beulen

**Die Beulanalyse wurde nicht berechnet.**

## Normeinstellungen

| Position | Wert | Einheit | Bezug |
|---|---|---|---|
| Sicherheitsfaktor $\gamma_{M0}$ | 1,00 | - | EN 1993-1-1 – 6.1 |
| Sicherheitsfaktor $\gamma_{M1}$ | 1,00 | - | EN 1993-1-1 – 6.1 |
| Sicherheitsfaktor $\gamma_{M2}$ | 1,25 | - | EN 1993-1-1 – 6.1 |
| Sicherheitsfaktor $\gamma_{M3}$ | 1,25 | - | EN 1993-1-8 – Table 2.1 |
| Sicherheitsfaktor $\gamma_C$ | 1,50 | - | EN 1992-1-1 – 2.4.2.4 |
| Sicherheitsfaktor $\gamma_{Inst}$ | 1,20 | - | EN 1992-4 – Table 4.1 |
| Verbindungskoeffizient βj | 0,67 | - | EN 1993-1-8 – 6.2.5(7) |
| Wirksame Fläche - Einfluss der Netzgröße | 0,10 | - | |
| Reibungsbeiwert - Beton | 0,25 | - | EN 1993-1-8 |
| Reibungskoeffizient bei gleitfesten Verbindungen | 0,30 | - | EN 1993-1-8 – Table 3.7 |
| Plastische Dehnung - Grenzwert | 0,05 | - | EN 1993-1-5 |
| Konstruktionsregeln | Ja | | |
| Distance between bolts [d0] | 2,20 | - | EN 1993-1-8 – Table 3.3 |
| Distance between bolts and edge [d0] | 1,20 | - | EN 1993-1-8 – Table 3.3 |
| Nachweis der Tragfähigkeit bei Betonausbruch | Beide | | |
| Berechnetes αb für Lochleibungsnachweis anwenden. | Ja | | EN 1993-1-8 – Table 3.4 |
| Gerissener Beton | Ja | | EN 1992-4 |
| Überprüfen der lokalen Verformung | Ja | | |
| Lokale Verformung - Grenzwert | 0,03 | - | CIDECT DG 1, 3 – 1.1 |
| Geometrische Nichtlinearität (GMNA) | Ja | | Analyse mit großen Verformungen für Verbindungen mit Hohlprofilen |
| Ausgesteiftes System | Nein | | EN 1993-1-8 – 5.2.2.5 |

## Projektdaten

| | |
|---|---|
| Projektname | IdeaStatiCa-Stadion_Fazanerija_JK-6_BR - 1017 |
| Projektnummer | Detajl D11-O6 |
| Autor | mag. Igor Gorup dipl. ing. |
| Beschreibung | |
| Datum | 18.06.2025 |
| Norm | EN |

## Material

| | |
|---|---|
| Stahl | Baustahl S 355, Baustahl S 235, S 355 |

# Projektposition 1017

## Bemessung

| | |
|---|---|
| Name | 1017 |
| Beschreibung | |
| Berechnung | Spannung, Dehnung/ Lasten im Gleichgewicht |

### Bauteile

#### Geometrie

| Name | Querschnitt | β – Rotation [°] | Y - Rotation [°] | α - Rotation [°] | Abstand ex [mm] | Abstand ey [mm] | Abstand ez [mm] |
|---|---|---|---|---|---|---|---|
| 528 | 795 - RHS80x80 | -90,0 | 34,5 | -180,0 | 0 | 0 | 0 |
| 156 | 871 - IPE180 | 0,0 | 0,0 | -180,0 | 0 | 0 | 0 |
| 157 | 871 - IPE180 | 90,0 | 0,0 | -180,0 | 0 | 0 | 0 |

#### Auflager und Kräfte

| Name | Auflager | Kräfte in | X [mm] |
|---|---|---|---|
| 528 / anfang | Mx-My-Mz | Schrauben | 0 |
| 156 / anfang | N-Vy-Vz-Mx-My-Mz | Position | 0 |
| 156 / ende | | Position | 0 |
| 157 / ende | | Position | 0 |

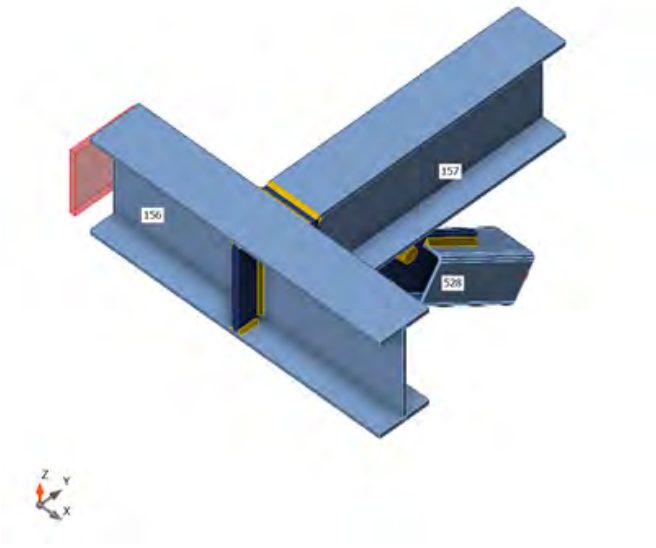


### Querschnitte

| Name | Material |
|---|---|
| 795 - RHS80x80 | Baustahl S 355 |
| 871 - IPE180 | S 355 |

### Schrauben

| Name | Durchmesser [mm] | $f_y$ [MPa] | $f_u$ [MPa] | Bruttofläche [$mm^2$] |
|---|---|---|---|---|
| M12 8.8 | 12 | 640,0 | 800,0 | 113 |
| M16 8.8 | 16 | 640,0 | 800,0 | 201 |

## Lasteinwirkungen (Kräfte im Gleichgewicht)

| Name | Bauteil | N [kN] | Vy [kN] | Vz [kN] | Mx [kNm] | My [kNm] | Mz [kNm] |
|---|---|---|---|---|---|---|---|
| CO11(16) | 528 / Anfang | 51,0 | 0,0 | 0,1 | 0,0 | 0,0 | 0,0 |
| | 156 / Anfang | 9,7 | -1,5 | 9,2 | 0,0 | 7,9 | 0,4 |
| | 156 / Ende | -1,6 | -0,8 | 11,5 | 0,0 | -7,8 | -0,3 |
| | 157 / Ende | 11,2 | -0,1 | 8,1 | 0,0 | 0,0 | -0,1 |
| CO11(17) | 528 / Anfang | 20,9 | 0,0 | 0,1 | 0,0 | 0,0 | 0,0 |
| | 156 / Anfang | 5,1 | 0,7 | 1,4 | 0,0 | -1,0 | 0,0 |
| | 156 / Ende | -2,7 | 0,2 | 3,5 | 0,0 | 0,8 | 0,1 |
| | 157 / Ende | 6,2 | 0,1 | 6,8 | 0,0 | 0,0 | 0,0 |
| CO11(18) | 528 / Anfang | 53,2 | 0,0 | 0,1 | 0,0 | 0,0 | 0,0 |
| | 156 / Anfang | 9,9 | -2,1 | 10,2 | 0,0 | 8,9 | 0,5 |
| | 156 / Ende | -1,2 | -1,0 | 11,8 | 0,0 | -8,8 | -0,4 |
| | 157 / Ende | 11,2 | -0,2 | 8,1 | 0,0 | 0,0 | -0,1 |
| CO11(19) | 528 / Anfang | 50,8 | 0,0 | 0,1 | 0,0 | 0,0 | 0,0 |
| | 156 / Anfang | 9,7 | -1,6 | 9,1 | 0,0 | 7,6 | 0,4 |
| | 156 / Ende | -1,6 | -0,8 | 10,8 | 0,0 | -7,5 | -0,3 |
| | 157 / Ende | 11,1 | -0,1 | 8,7 | 0,0 | 0,0 | -0,1 |
| CO11(20) | 528 / Anfang | 21,0 | 0,0 | 0,1 | 0,0 | 0,0 | 0,0 |
| | 156 / Anfang | 5,1 | 0,7 | 1,4 | 0,0 | -0,9 | 0,0 |
| | 156 / Ende | -2,7 | 0,2 | 3,6 | 0,0 | 0,7 | 0,1 |
| | 157 / Ende | 6,3 | 0,1 | 6,8 | 0,0 | 0,0 | 0,0 |
| CO11(21) | 528 / Anfang | 34,7 | 0,0 | 0,1 | 0,0 | 0,0 | 0,0 |
| | 156 / Anfang | 6,3 | -1,8 | 7,1 | 0,0 | 6,5 | 0,4 |
| | 156 / Ende | -0,5 | -0,8 | 7,9 | 0,0 | -6,4 | -0,4 |
| | 157 / Ende | 6,8 | -0,1 | 4,5 | 0,0 | 0,0 | -0,1 |
| CO11(22) | 528 / Anfang | 4,2 | 0,0 | 0,1 | 0,0 | 0,0 | 0,0 |
| | 156 / Anfang | 1,8 | 0,9 | -1,2 | 0,0 | -2,8 | -0,1 |
| | 156 / Ende | -1,9 | 0,4 | 0,2 | 0,0 | 2,6 | 0,1 |
| | 157 / Ende | 2,3 | 0,1 | 3,3 | 0,0 | 0,0 | 0,0 |
| CO11(23) | 528 / Anfang | 45,6 | 0,0 | 0,1 | 0,0 | 0,0 | 0,0 |
| | 156 / Anfang | 8,4 | -2,0 | 9,0 | 0,0 | 8,1 | 0,4 |
| | 156 / Ende | -1,0 | -1,0 | 10,7 | 0,0 | -8,0 | -0,4 |
| | 157 / Ende | 9,4 | -0,1 | 6,1 | 0,0 | 0,0 | -0,1 |
| CO9(24) | 528 / Anfang | 8,5 | 0,0 | 0,0 | 0,0 | 0,0 | 0,0 |
| | 156 / Anfang | -0,3 | 0,2 | 2,5 | 0,0 | 2,9 | -0,1 |
| | 156 / Ende | 0,6 | -0,1 | 1,9 | 0,0 | -2,7 | 0,0 |
| | 157 / Ende | 2,2 | 0,0 | 0,4 | 0,0 | 0,0 | 0,0 |
| CO11(25) | 528 / Anfang | 27,6 | 0,0 | 0,1 | 0,0 | 0,0 | 0,0 |
| | 156 / Anfang | 6,0 | 0,2 | 3,2 | 0,0 | 0,9 | 0,1 |
| | 156 / Ende | -2,3 | 0,0 | 4,5 | 0,0 | -1,0 | 0,0 |
| | 157 / Ende | 7,3 | 0,0 | 7,8 | 0,0 | 0,0 | 0,0 |
| CO11(10) | 528 / Anfang | 22,7 | 0,0 | 0,1 | 0,0 | 0,0 | 0,0 |
| | 156 / Anfang | 5,8 | 0,6 | 1,8 | 0,0 | -0,6 | 0,1 |
| | 156 / Ende | -2,7 | 0,2 | 4,1 | 0,0 | 0,4 | 0,0 |
| | 157 / Ende | 6,4 | 0,0 | 6,9 | 0,0 | 0,0 | 0,0 |
| CO11(11) | 528 / Anfang | 33,1 | 0,0 | 0,1 | 0,0 | 0,0 | 0,0 |
| | 156 / Anfang | 5,7 | -1,7 | 6,8 | 0,0 | 6,2 | 0,3 |
| | 156 / Ende | -0,4 | -0,8 | 7,4 | 0,0 | -6,1 | -0,3 |
| | 157 / Ende | 6,7 | -0,1 | 4,5 | 0,0 | 0,0 | -0,1 |
| CO11(15) | 528 / Anfang | 53,0 | 0,0 | 0,1 | 0,0 | 0,0 | 0,0 |
| | 156 / Anfang | 9,9 | -2,1 | 10,1 | 0,0 | 8,9 | 0,5 |
| | 156 / Ende | -1,2 | -1,0 | 11,7 | 0,0 | -8,8 | -0,4 |
| | 157 / Ende | 11,1 | -0,2 | 8,1 | 0,0 | 0,0 | -0,1 |

| Name | Bauteil | N [kN] | Vy [kN] | Vz [kN] | Mx [kNm] | My [kNm] | Mz [kNm] |
|---|---|---|---|---|---|---|---|
| CO11(3) | 528 / Anfang | 14,1 | 0,0 | 0,1 | 0,0 | 0,0 | 0,0 |
| | 156 / Anfang | 3,7 | 0,8 | 0,4 | 0,0 | -1,6 | 0,0 |
| | 156 / Ende | -2,4 | 0,3 | 2,6 | 0,0 | 1,4 | 0,1 |
| | 157 / Ende | 4,7 | 0,1 | 4,9 | 0,0 | 0,0 | 0,0 |
| CO11(6) | 528 / Anfang | 51,4 | 0,0 | 0,1 | 0,0 | 0,0 | 0,0 |
| | 156 / Anfang | 9,2 | -1,9 | 9,8 | 0,0 | 8,5 | 0,4 |
| | 156 / Ende | -1,2 | -1,0 | 11,2 | 0,0 | -8,4 | -0,4 |
| | 157 / Ende | 11,1 | -0,1 | 8,1 | 0,0 | 0,0 | -0,1 |

### Fehlende Lasten

| Name | X [kN] | Y [kN] | Z [kN] | Mx [kNm] | My [kNm] | Mz [kNm] |
|---|---|---|---|---|---|---|
| CO11(16) | 8,0 | -28,6 | 0,0 | 0,0 | -0,1 | 0,0 |
| CO11(17) | 2,5 | -12,0 | 0,0 | 0,0 | 0,2 | -0,1 |
| CO11(18) | 8,5 | -29,6 | 0,0 | 0,0 | -0,1 | 0,1 |
| CO11(19) | 8,0 | -28,4 | 0,0 | 0,0 | -0,1 | 0,0 |
| CO11(20) | 2,4 | -12,0 | 0,0 | 0,0 | 0,2 | -0,1 |
| CO11(21) | 5,8 | -19,2 | 0,0 | 0,0 | -0,1 | 0,1 |
| CO11(22) | -0,1 | -2,6 | 0,0 | 0,0 | 0,2 | -0,1 |
| CO11(23) | 7,4 | -25,3 | 0,0 | 0,0 | -0,1 | 0,1 |
| CO9(24) | 0,3 | -4,9 | 0,0 | 0,0 | -0,1 | 0,1 |
| CO11(25) | 3,6 | -15,6 | 0,0 | 0,0 | 0,1 | -0,1 |
| CO11(10) | 3,1 | -13,1 | 0,0 | 0,0 | 0,2 | -0,1 |
| CO11(11) | 5,1 | -18,1 | 0,0 | 0,0 | -0,1 | 0,1 |
| CO11(15) | 8,5 | -29,6 | 0,0 | 0,0 | -0,1 | 0,1 |
| CO11(3) | 1,4 | -8,1 | 0,0 | 0,0 | 0,2 | -0,1 |
| CO11(6) | 7,8 | -28,4 | 0,0 | 0,0 | -0,1 | 0,1 |

## Nachweis

### Übersicht

| Name | Wert | Nachweisstatus |
|---|---|---|
| Berechnung | 100,0% | OK |
| Platten | 1,0 < 5,0% | OK |
| Lokale Verformung | 0,5 < 3% | OK |
| Schrauben | 57,6 < 100% | OK |
| Schweißnähte | 98,2 < 100% | OK |
| Beulen | Nicht berechnet | |

### Platten

| Name | Material | $t_p$ [mm] | Lasten | $\sigma_{Ed}$ [MPa] | $\varepsilon_{Pl}$ [%] | $\sigma_{c,Ed}$ [MPa] | Status |
|---|---|---|---|---|---|---|---|
| 528 | Baustahl S 355 | 4,0 | CO11(18) | 324,4 | 0,6 | 0,0 | OK |
| 156-bfl 1 | S 355 | 8,0 | CO11(18) | 292,1 | 0,0 | 0,0 | OK |
| 156-tfl 1 | S 355 | 8,0 | CO11(18) | 283,0 | 0,0 | 0,0 | OK |
| 156-w 1 | S 355 | 5,3 | CO11(18) | 62,3 | 0,0 | 0,0 | OK |
| 157-bfl 1 | S 355 | 8,0 | CO11(18) | 67,4 | 0,0 | 0,0 | OK |
| 157-tfl 1 | S 355 | 8,0 | CO11(18) | 194,1 | 0,0 | 0,0 | OK |
| 157-w 1 | S 355 | 5,3 | CO11(18) | 114,9 | 0,0 | 0,0 | OK |
| Verschobene Stirnplatte1a | S 355 | 10,0 | CO11(18) | 84,2 | 0,0 | 205,5 | OK |
| Verschobene Stirnplatte1b | S 355 | 10,0 | CO11(18) | 140,8 | 0,0 | 205,5 | OK |
| STEIFF | S 355 | 10,0 | CO11(18) | 39,2 | 0,0 | 0,0 | OK |
| Verbindungsblech1a | S 355 | 10,0 | CO11(18) | 355,1 | 0,1 | 143,7 | OK |
| Verbindungsblech1b | S 355 | 10,0 | CO11(18) | 357,2 | 1,0 | 97,7 | OK |
| Rippe1 | S 355 | 10,0 | CO11(18) | 12,5 | 0,0 | 0,0 | OK |

**Bemessungsdaten**

| Material | $f_y$ [MPa] | $\varepsilon_{lim}$ [%] |
|---|---|---|
| Baustahl S 355 | 355,0 | 5,0 |
| S 355 | 355,0 | 5,0 |

**Erläuterung von Symbolen**

| | |
|---|---|
| $t_p$ | Plattendicke |
| $\sigma_{Ed}$ | Vergleichsspannung |
| $\varepsilon_{Pl}$ | Plastische Dehnung |
| $\sigma_{c,Ed}$ | Kontaktspannung |
| $f_y$ | Streckgrenze |
| $\varepsilon_{lim}$ | Grenzwert plastische Dehnung |

## Lokale Verformung

| Name | $d_0$ [mm] | Lasten | $\delta$ [mm] | $\delta_{lim}$ [mm] | $\delta/d_0$ [%] | Nachweisstatus |
|---|---|---|---|---|---|---|
| 528 | 80 | CO11(18) | 0 | 2 | 0,5 | OK |

**Erläuterung von Symbolen**

| | |
|---|---|
| $d_0$ | Querschnittsgröße |
| $\delta$ | Lokale Verformung im Querschnitt |
| $\delta_{lim}$ | Zulässige Verformung |

*Gesamt, CO11(18)*

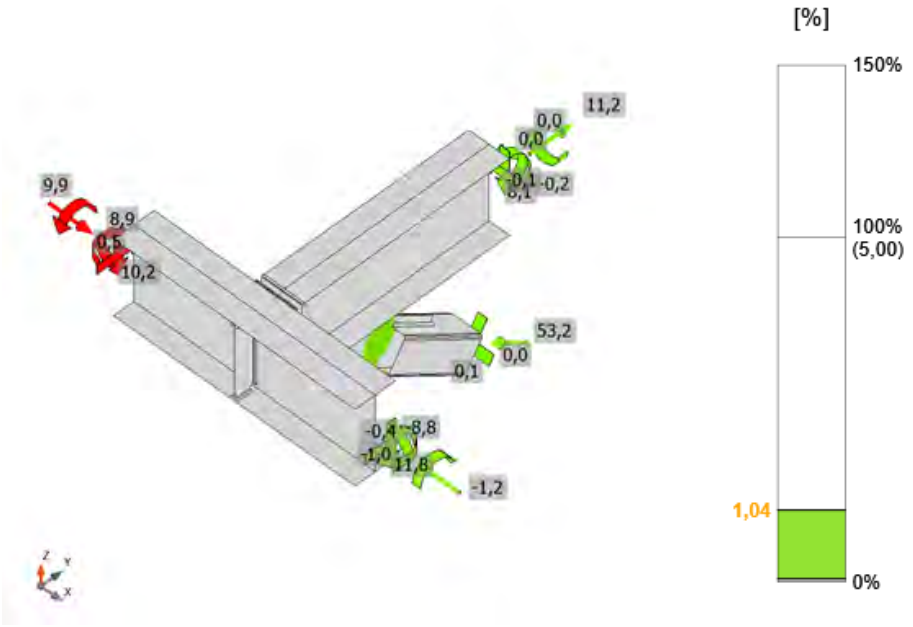


*Dehnung, CO11(18)*

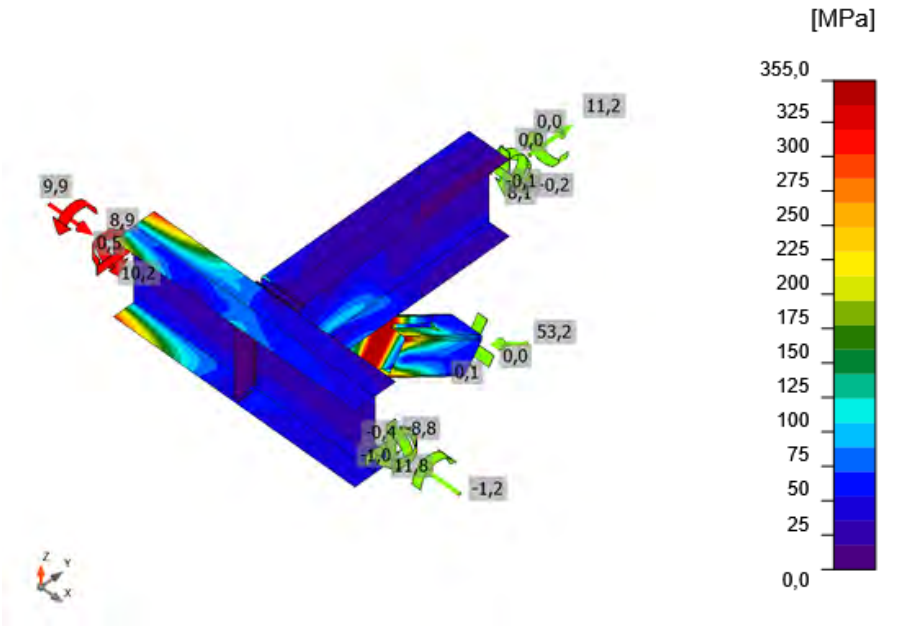


*Vergleichsspannung, CO11(18)*

## Schrauben

| Form | Position | Klasse | Lasten | $F_{t,Ed}$ [kN] | $F_{v,Ed}$ [kN] | $F_{b,Rd}$ [kN] | $Ut_t$ [%] | $Ut_s$ [%] | $Ut_{ts}$ [%] | Konstruktionsregeln | Status |
|---|---|---|---|---|---|---|---|---|---|---|---|
| 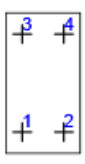 | B1 | M12 8.8 - 1 | CO11(18) | 5,7 | 5,6 | 78,4 | 11,7 | 17,2 | 25,6 | OK | OK |
| | B2 | M12 8.8 - 1 | CO11(18) | 1,0 | 5,4 | 78,4 | 2,1 | 16,7 | 18,2 | OK | OK |
| | B3 | M12 8.8 - 1 | CO11(18) | 2,3 | 5,7 | 78,4 | 4,7 | 17,5 | 20,8 | OK | OK |
| | B4 | M12 8.8 - 1 | CO11(18) | 0,4 | 5,4 | 78,4 | 0,8 | 16,7 | 17,2 | OK | OK |
| 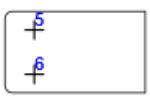 | B5 | M16 8.8 - 2 | CO11(18) | 15,8 | 27,1 | 137,3 | 17,4 | 44,9 | 57,3 | OK | OK |
| | B6 | M16 8.8 - 2 | CO11(18) | 17,7 | 26,3 | 130,9 | 19,6 | 43,6 | 57,6 | OK | OK |

**Bemessungsdaten**

| Klasse | $F_{t,Rd}$ [kN] | $B_{p,Rd}$ [kN] | $F_{v,Rd}$ [kN] |
|---|---|---|---|
| M12 8.8 - 1 | 48,6 | 140,5 | 32,4 |
| M16 8.8 - 2 | 90,4 | 187,5 | 60,3 |

**Erläuterung von Symbolen**

| | |
|---|---|
| $F_{t,Ed}$ | Zugkraft |
| $F_{v,Ed}$ | Resultierende der Schraubenscherkräfte Vy und Vz in Scherebenen |
| $F_{b,Rd}$ | Lochleibungstragfähigkeit der Platte nach EN 1993-1-8 Tab. 3.4 |
| $Ut_t$ | Ausnutzung unter Zug |
| $Ut_s$ | Ausnutzung unter Schub |
| $Ut_{ts}$ | Interaktion von Zug und Schub EN_1993-1-8 Tabelle 3.4 |
| $F_{t,Rd}$ | Zugtragfähigkeit der Schraube nach EN 1993-1-8 Tabelle 3.4 |
| $B_{p,Rd}$ | Durchstanztragfähigkeit nach EN 1993-1-8 Tabelle 3.4 |
| $F_{v,Rd}$ | Schertragfähigkeit der Schraube nach EN 1993-1-8 Tabelle 3.4 |

## Schweißnähte

| Position | Kante | $T_w$ [mm] | L [mm] | Lasten | $\sigma_{w,Ed}$ [MPa] | $\varepsilon_{Pl}$ [%] | $\sigma_{\perp}$ [MPa] | $\tau_{\perp}$ [MPa] | $\tau_{\parallel}$ [MPa] | Ut [%] | $Ut_c$ [%] | Konstruktionsregeln | Status |
|---|---|---|---|---|---|---|---|---|---|---|---|---|---|
| Verschobene Stirnplatte1a | 156-tfl 1 | ◢ 4,0 ◣ | 90 | CO11(18) | 331,0 | 0,0 | -179,2 | 149,8 | 58,1 | 76,0 | 42,9 | OK | OK |
| | | ◢ 4,0 ◣ | 90 | CO11(18) | 217,0 | 0,0 | -88,4 | 112,1 | -22,8 | 49,8 | 32,0 | OK | OK |
| Verschobene Stirnplatte1a | 156-bfl 1 | ◢ 4,0 ◣ | 90 | CO11(18) | 113,0 | 0,0 | -69,0 | -51,6 | 1,5 | 25,9 | 15,5 | OK | OK |
| | | ◢ 4,0 ◣ | 90 | CO11(18) | 107,2 | 0,0 | -64,0 | -49,5 | 3,8 | 24,6 | 16,0 | OK | OK |
| Verschobene Stirnplatte1b | 157-bfl 1 | ◢ 4,0 ◣ | 90 | CO11(18) | 64,5 | 0,0 | -15,8 | -27,1 | 23,9 | 14,8 | 9,2 | OK | OK |
| | | ◢ 4,0 ◣ | 90 | CO11(18) | 119,9 | 0,0 | -72,2 | -50,4 | -22,7 | 27,5 | 16,0 | OK | OK |
| Verschobene Stirnplatte1b | 157-tfl 1 | ◢ 4,0 ◣ | 90 | CO11(18) | 264,9 | 0,0 | -155,9 | 113,8 | 48,4 | 60,8 | 36,3 | OK | OK |
| | | ◢ 4,0 ◣ | 90 | CO11(18) | 163,0 | 0,0 | -47,8 | 68,9 | -57,9 | 37,4 | 24,5 | OK | OK |
| Verschobene Stirnplatte1b | 157-w 1 | ◢ 4,0 ◣ | 170 | CO11(21) | 38,6 | 0,0 | 19,1 | 6,9 | 18,1 | 8,9 | 7,7 | OK | OK |
| | | ◢ 4,0 ◣ | 171 | CO11(18) | 70,6 | 0,0 | -15,1 | 1,3 | 39,8 | 16,2 | 11,2 | OK | OK |
| 156-bfl 1 | STEIFF | ◢ 4,0 ◣ | 34 | CO11(18) | 38,3 | 0,0 | 0,6 | -1,1 | -22,1 | 8,8 | 7,2 | OK | OK |
| | | ◢ 4,0 ◣ | 34 | CO11(18) | 32,7 | 0,0 | -5,4 | 3,7 | 18,3 | 7,5 | 6,6 | OK | OK |
| 156-w 1 | STEIFF | ◢ 4,0 ◣ | 146 | CO11(18) | 49,9 | 0,0 | 11,0 | 6,5 | 27,3 | 11,5 | 10,2 | OK | OK |
| | | ◢ 4,0 ◣ | 146 | CO11(18) | 39,7 | 0,0 | -7,0 | 8,4 | -21,0 | 9,1 | 8,5 | OK | OK |
| 156-tfl 1 | STEIFF | ◢ 4,0 ◣ | 34 | CO11(23) | 52,3 | 0,0 | 9,5 | 0,9 | -29,7 | 12,0 | 7,9 | OK | OK |
| | | ◢ 4,0 ◣ | 34 | CO11(23) | 38,9 | 0,0 | -4,3 | -4,3 | 21,9 | 8,9 | 6,8 | OK | OK |
| Verschobene Stirnplatte1a | STEIFF | ◢ 4,0 ◣ | 162 | CO11(18) | 50,2 | 0,0 | -13,3 | -10,3 | 26,0 | 11,5 | 8,8 | OK | OK |
| | | ◢ 4,0 ◣ | 162 | CO11(23) | 53,3 | 0,0 | 23,8 | -8,5 | -26,1 | 12,2 | 7,6 | OK | OK |
| 157-tfl 1 | Verbindungsblech1a | ◢ 6,0 ◣ | 219 | CO11(18) | 137,0 | 0,0 | -62,8 | -34,0 | 61,5 | 31,5 | 26,2 | OK | OK |
| | | ◢ 6,0 ◣ | 219 | CO11(19) | 101,5 | 0,0 | -43,8 | 1,0 | -52,9 | 23,3 | 15,6 | OK | OK |
| Verbindungsblech1b | 528-w 1 | ◢ 6,0 | 109 | CO11(19) | 244,0 | 0,0 | -1,9 | -59,8 | -127,5 | 56,0 | 39,1 | OK | OK |
| Verbindungsblech1b | 528-w 1 | ◢ 6,0 | 109 | CO11(18) | 373,1 | 0,0 | -34,1 | 95,8 | -191,9 | 85,7 | 42,5 | OK | OK |

| Position | Kante | $T_w$ [mm] | L [mm] | Lasten | $\sigma_{w,Ed}$ [MPa] | $\varepsilon_{Pl}$ [%] | $\sigma_{\perp}$ [MPa] | $\tau_{\perp}$ [MPa] | $\tau_{\parallel}$ [MPa] | Ut [%] | $Ut_c$ [%] | Konstruktionsregeln | Status |
|---|---|---|---|---|---|---|---|---|---|---|---|---|---|
| Verbindungsblech1b | 528-w 3 | ◢ 6,0 | 109 | CO11(18) | 427,8 | 0,6 | -85,1 | 66,7 | 232,7 | 98,2 | 69,3 | OK | OK |
| Verbindungsblech1b | 528-w 3 | ◢ 6,0 | 109 | CO11(18) | 427,7 | 0,5 | 81,5 | -62,9 | 234,1 | 98,2 | 53,3 | OK | OK |
| 156-bfl 1 | Rippe1 | ◢ 4,0 ◣ | 34 | CO11(18) | 17,1 | 0,0 | 0,2 | -0,1 | 9,8 | 3,9 | 3,9 | OK | OK |
| | | ◢ 4,0 ◣ | 34 | CO11(18) | 20,8 | 0,0 | 1,3 | -1,6 | -11,9 | 4,8 | 4,8 | OK | OK |
| 156-w 1 | Rippe1 | ◢ 4,0 ◣ | 146 | CO11(18) | 20,9 | 0,0 | -11,0 | -9,8 | 2,9 | 4,8 | 4,8 | OK | OK |
| | | ◢ 4,0 ◣ | 146 | CO11(18) | 19,8 | 0,0 | -8,9 | 10,1 | -1,8 | 4,6 | 4,6 | OK | OK |
| 156-tfl 1 | Rippe1 | ◢ 4,0 ◣ | 34 | CO11(18) | 13,4 | 0,0 | 8,5 | 6,0 | 0,3 | 3,1 | 3,1 | OK | OK |
| | | ◢ 4,0 ◣ | 34 | CO11(23) | 14,4 | 0,0 | -4,1 | 3,1 | -7,3 | 3,3 | 3,3 | OK | OK |

**Bemessungsdaten**

| Material | $f_u$ [MPa] | $\beta_w$ [-] | $\sigma_{w,Rd}$ [MPa] | 0.9 σ [MPa] |
|---|---|---|---|---|
| S 355 | 490,0 | 0,90 | 435,6 | 352,8 |

**Erläuterung von Symbolen**

| | |
|---|---|
| $T_w$ | Nahtdicke a |
| L | Länge |
| $\sigma_{w,Ed}$ | Vergleichsspannung |
| $\varepsilon_{Pl}$ | Dehnung |
| $\sigma_{\perp}$ | Senkrechte Spannung |
| $\tau_{\perp}$ | Scherspannung senkrecht zur Schweißnahtachse |
| $\tau_{\parallel}$ | Scherspannung parallel zur Schweißnahtachse |
| Ut | Ausnutzung |
| $Ut_c$ | Schätzung der Schweißnahtkapazität |
| ◢ | Kehlnaht |
| $f_u$ | Grenzfestigkeit der Schweißnaht |
| $\beta_w$ | Korrelationsfaktor nach EN 1993-1-8 Tab. 4.1 |
| $\sigma_{w,Rd}$ | Tragfähigkeit der Schweißnaht |
| 0.9 σ | Senkrechter Spannungswiderstand - 0.9*fu / γM2 |

## Beulen

**Die Beulanalyse wurde nicht berechnet.**

## Normeinstellungen

| Position | Wert | Einheit | Bezug |
|---|---|---|---|
| Sicherheitsfaktor $\gamma_{M0}$ | 1,00 | - | EN 1993-1-1 – 6.1 |
| Sicherheitsfaktor $\gamma_{M1}$ | 1,00 | - | EN 1993-1-1 – 6.1 |
| Sicherheitsfaktor $\gamma_{M2}$ | 1,25 | - | EN 1993-1-1 – 6.1 |
| Sicherheitsfaktor $\gamma_{M3}$ | 1,25 | - | EN 1993-1-8 – Table 2.1 |
| Sicherheitsfaktor $\gamma_C$ | 1,50 | - | EN 1992-1-1 – 2.4.2.4 |
| Sicherheitsfaktor $\gamma_{Inst}$ | 1,20 | - | EN 1992-4 – Table 4.1 |
| Verbindungskoeffizient βj | 0,67 | - | EN 1993-1-8 – 6.2.5(7) |
| Wirksame Fläche - Einfluss der Netzgröße | 0,10 | - | |
| Reibungsbeiwert - Beton | 0,25 | - | EN 1993-1-8 |
| Reibungskoeffizient bei gleitfesten Verbindungen | 0,30 | - | EN 1993-1-8 – Table 3.7 |
| Plastische Dehnung - Grenzwert | 0,05 | - | EN 1993-1-5 |
| Konstruktionsregeln | Ja | | |
| Distance between bolts [d0] | 2,20 | - | EN 1993-1-8 – Table 3.3 |
| Distance between bolts and edge [d0] | 1,20 | - | EN 1993-1-8 – Table 3.3 |
| Nachweis der Tragfähigkeit bei Betonausbruch | Beide | | |
| Berechnetes αb für Lochleibungsnachweis anwenden. | Ja | | EN 1993-1-8 – Table 3.4 |
| Gerissener Beton | Ja | | EN 1992-4 |
| Überprüfen der lokalen Verformung | Ja | | |
| Lokale Verformung - Grenzwert | 0,03 | - | CIDECT DG 1, 3 – 1.1 |
| Geometrische Nichtlinearität (GMNA) | Ja | | Analyse mit großen Verformungen für Verbindungen mit Hohlprofilen |
| Ausgesteiftes System | Nein | | EN 1993-1-8 – 5.2.2.5 |

| | |
|---|---|
| **Projekt:** | **IdeaStatiCa-Stadion_Fazanerija_JK-6_BR - 1129** |
| **Projektnummer:** | **Detajl D12-O6** |
| **Autor:** | **mag. Igor Gorup dipl. ing.** |

## Projektdaten

| | |
|---|---|
| Projektname | IdeaStatiCa-Stadion_Fazanerija_JK-6_BR - 1129 |
| Projektnummer | Detajl D12-O6 |
| Autor | mag. Igor Gorup dipl. ing. |
| Beschreibung | |
| Datum | 18.06.2025 |
| Norm | EN |

## Material

| | |
|---|---|
| Stahl | Baustahl S 355, Baustahl S 235, S 355 |

# Projektposition 1129

## Bemessung

| | |
|---|---|
| Name | 1129 |
| Beschreibung | |
| Berechnung | Spannung, Dehnung/ Lasten im Gleichgewicht |

### Bauteile

#### Geometrie

| Name | Querschnitt | β – Rotation [°] | Y - Rotation [°] | α - Rotation [°] | Abstand ex [mm] | Abstand ey [mm] | Abstand ez [mm] |
|---|---|---|---|---|---|---|---|
| 253 | 18 - IPE200 | 90,0 | 1,4 | 180,0 | 0 | 0 | 0 |
| 279 | 18 - IPE200 | -90,0 | -3,3 | -180,0 | 0 | 0 | 0 |
| 523 | 18 - IPE200 | 0,0 | 0,0 | -180,0 | 0 | 0 | 0 |

#### Auflager und Kräfte

| Name | Auflager | Kräfte in | X [mm] |
|---|---|---|---|
| 253 / ende | | Position | 0 |
| 279 / ende | | Position | 0 |
| 523 / anfang | N-Vy-Vz-Mx-My-Mz | Position | 0 |
| 523 / ende | | Position | 0 |

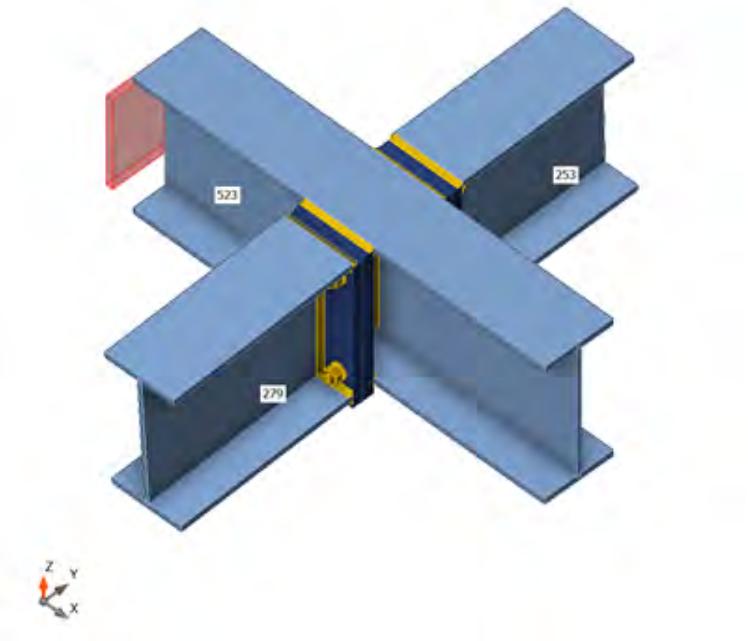


### Querschnitte

| Name | Material |
|---|---|
| 18 - IPE200 | Baustahl S 355 |

## Schrauben

| Name | Durchmesser [mm] | $f_y$ [MPa] | $f_u$ [MPa] | Bruttofläche [$mm^2$] |
|---|---|---|---|---|
| M12 8.8 | 12 | 640,0 | 800,0 | 113 |

## Lasteinwirkungen (Kräfte im Gleichgewicht)

| Name | Bauteil | N [kN] | Vy [kN] | Vz [kN] | Mx [kNm] | My [kNm] | Mz [kNm] |
|---|---|---|---|---|---|---|---|
| CO11(24) | 253 / Ende | -1,4 | -0,2 | 1,1 | 0,0 | -2,0 | -0,2 |
| | 279 / Ende | -2,5 | 0,5 | 4,0 | 0,0 | -2,0 | 0,4 |
| | 523 / Anfang | 1,0 | 0,8 | -3,2 | 0,0 | -8,6 | -0,7 |
| | 523 / Ende | -0,3 | 0,6 | -1,9 | 0,0 | 8,6 | 0,6 |
| CO11(25) | 253 / Ende | -0,1 | 0,1 | -0,4 | 0,0 | 1,6 | 0,1 |
| | 279 / Ende | -0,1 | -0,9 | 3,0 | 0,0 | 1,6 | -0,8 |
| | 523 / Anfang | -1,8 | -0,3 | -3,4 | 0,0 | -3,0 | 0,3 |
| | 523 / Ende | 0,8 | 0,6 | 0,8 | 0,0 | 2,9 | 0,4 |
| CO11(26) | 253 / Ende | 0,4 | -0,1 | -1,8 | 0,0 | 4,5 | -0,1 |
| | 279 / Ende | 0,5 | -0,7 | -1,2 | 0,0 | 4,5 | -0,6 |
| | 523 / Anfang | -1,0 | -0,5 | 0,0 | 0,0 | 1,7 | 0,5 |
| | 523 / Ende | 0,4 | 0,2 | 2,9 | 0,0 | -1,7 | 0,2 |
| CO11(27) | 253 / Ende | -1,8 | 0,0 | 2,8 | 0,0 | -5,5 | 0,0 |
| | 279 / Ende | -3,1 | 0,4 | 8,7 | 0,0 | -5,5 | 0,2 |
| | 523 / Anfang | 0,2 | 1,0 | -6,9 | 0,0 | -13,9 | -0,9 |
| | 523 / Ende | 0,1 | 0,9 | -4,4 | 0,0 | 13,9 | 0,7 |
| CO11(28) | 253 / Ende | -1,8 | 0,0 | 1,6 | 0,0 | -2,7 | 0,0 |
| | 279 / Ende | -3,3 | 0,2 | 6,6 | 0,0 | -2,7 | 0,0 |
| | 523 / Anfang | 0,0 | 0,9 | -5,7 | 0,0 | -12,7 | -0,8 |
| | 523 / Ende | 0,2 | 1,0 | -2,3 | 0,0 | 12,7 | 0,8 |
| CO9(29) | 253 / Ende | 0,0 | -0,3 | 0,0 | 0,0 | 0,0 | -0,4 |
| | 279 / Ende | 0,2 | 0,4 | -0,6 | 0,0 | 0,0 | 0,4 |
| | 523 / Anfang | 0,5 | 0,0 | 1,1 | 0,0 | -0,8 | 0,0 |
| | 523 / Ende | -0,3 | 0,0 | -0,5 | 0,0 | 0,8 | 0,0 |
| CO11(30) | 253 / Ende | 0,1 | -0,1 | -2,4 | 0,0 | 5,9 | -0,1 |
| | 279 / Ende | -0,1 | -0,7 | -2,2 | 0,0 | 5,9 | -0,5 |
| | 523 / Anfang | -0,9 | -0,4 | 0,6 | 0,0 | 1,2 | 0,3 |
| | 523 / Ende | 0,3 | 0,4 | 4,0 | 0,0 | -1,2 | 0,3 |
| CO11(31) | 253 / Ende | -1,0 | 0,0 | 1,7 | 0,0 | -3,1 | 0,0 |
| | 279 / Ende | -1,6 | -0,2 | 7,1 | 0,0 | -3,1 | -0,3 |
| | 523 / Anfang | -0,6 | 0,3 | -5,9 | 0,0 | -9,1 | -0,3 |
| | 523 / Ende | 0,4 | 0,8 | -2,8 | 0,0 | 9,1 | 0,6 |
| CO11(32) | 253 / Ende | -1,0 | 0,0 | -0,8 | 0,0 | 2,5 | 0,0 |
| | 279 / Ende | -2,0 | -0,6 | 2,4 | 0,0 | 2,5 | -0,5 |
| | 523 / Anfang | -1,2 | 0,2 | -3,1 | 0,0 | -6,3 | -0,2 |
| | 523 / Ende | 0,6 | 1,0 | 1,6 | 0,0 | 6,2 | 0,8 |
| CO11(33) | 253 / Ende | -1,5 | 0,0 | 3,4 | 0,0 | -6,8 | 0,0 |
| | 279 / Ende | -2,4 | 0,3 | 9,6 | 0,0 | -6,8 | 0,1 |
| | 523 / Anfang | 0,1 | 0,8 | -7,5 | 0,0 | -13,2 | -0,8 |
| | 523 / Ende | 0,2 | 0,7 | -5,3 | 0,0 | 13,2 | 0,6 |
| CO11(34) | 253 / Ende | -1,7 | -0,2 | 1,9 | 0,0 | -3,6 | -0,3 |
| | 279 / Ende | -2,9 | 0,5 | 7,0 | 0,0 | -3,6 | 0,3 |
| | 523 / Anfang | 0,9 | 0,8 | -5,5 | 0,0 | -12,1 | -0,8 |
| | 523 / Ende | -0,2 | 0,9 | -3,3 | 0,0 | 12,1 | 0,7 |
| CO11(35) | 253 / Ende | -1,8 | 0,0 | 2,9 | 0,0 | -5,6 | 0,0 |

| Name | Bauteil | N [kN] | Vy [kN] | Vz [kN] | Mx [kNm] | My [kNm] | Mz [kNm] |
|---|---|---|---|---|---|---|---|
| | 279 / Ende | -3,0 | 0,4 | 8,8 | 0,0 | -5,6 | 0,2 |
| | 523 / Anfang | 0,2 | 0,9 | -7,1 | 0,0 | -14,0 | -0,9 |
| | 523 / Ende | 0,2 | 0,9 | -4,4 | 0,0 | 14,0 | 0,7 |
| CO11(12) | 253 / Ende | -1,9 | 0,0 | 1,4 | 0,0 | -2,4 | 0,0 |
| | 279 / Ende | -3,5 | 0,2 | 6,3 | 0,0 | -2,4 | 0,1 |
| | 523 / Anfang | 0,1 | 0,9 | -5,4 | 0,0 | -12,5 | -0,9 |
| | 523 / Ende | 0,1 | 1,0 | -2,1 | 0,0 | 12,4 | 0,9 |
| CO11(14) | 253 / Ende | -1,5 | -0,2 | 1,7 | 0,0 | -3,2 | -0,2 |
| | 279 / Ende | -2,7 | 0,5 | 5,9 | 0,0 | -3,2 | 0,4 |
| | 523 / Anfang | 1,0 | 0,8 | -4,5 | 0,0 | -10,4 | -0,8 |
| | 523 / Ende | -0,3 | 0,7 | -3,0 | 0,0 | 10,4 | 0,6 |
| CO11(17) | 253 / Ende | 0,0 | -0,1 | -2,5 | 0,0 | 6,1 | -0,1 |
| | 279 / Ende | -0,2 | -0,7 | -2,4 | 0,0 | 6,1 | -0,5 |
| | 523 / Anfang | -0,9 | -0,3 | 0,8 | 0,0 | 1,3 | 0,3 |
| | 523 / Ende | 0,3 | 0,4 | 4,1 | 0,0 | -1,4 | 0,3 |
| CO11(21) | 253 / Ende | -1,4 | 0,0 | 2,9 | 0,0 | -5,6 | 0,0 |
| | 279 / Ende | -2,2 | 0,1 | 9,1 | 0,0 | -5,6 | 0,0 |
| | 523 / Anfang | -0,2 | 0,6 | -7,2 | 0,0 | -12,0 | -0,6 |
| | 523 / Ende | 0,3 | 0,8 | -4,6 | 0,0 | 12,0 | 0,6 |
| CO11(23) | 253 / Ende | -0,4 | 0,0 | -1,0 | 0,0 | 2,9 | 0,1 |
| | 279 / Ende | -0,8 | -0,9 | 2,0 | 0,0 | 2,9 | -0,8 |
| | 523 / Anfang | -1,8 | -0,2 | -2,9 | 0,0 | -3,5 | 0,1 |
| | 523 / Ende | 0,8 | 0,7 | 1,9 | 0,0 | 3,5 | 0,6 |
| CO11(3) | 253 / Ende | 0,3 | 0,1 | -1,0 | 0,0 | 2,8 | 0,2 |
| | 279 / Ende | 0,4 | -0,8 | 0,3 | 0,0 | 2,8 | -0,7 |
| | 523 / Anfang | -1,7 | -0,4 | -1,3 | 0,0 | 0,1 | 0,4 |
| | 523 / Ende | 0,7 | 0,3 | 2,0 | 0,0 | -0,1 | 0,2 |
| CO11(8) | 253 / Ende | -0,1 | -0,1 | -2,4 | 0,0 | 6,0 | -0,1 |
| | 279 / Ende | -0,6 | -0,7 | -1,5 | 0,0 | 6,0 | -0,6 |
| | 523 / Anfang | -1,0 | -0,3 | 0,0 | 0,0 | 0,0 | 0,2 |
| | 523 / Ende | 0,4 | 0,6 | 4,0 | 0,0 | 0,0 | 0,5 |
| CO11(9) | 253 / Ende | -0,2 | -0,2 | -1,8 | 0,0 | 4,8 | -0,2 |
| | 279 / Ende | -0,7 | -0,8 | 0,4 | 0,0 | 4,8 | -0,6 |
| | 523 / Anfang | -1,1 | -0,3 | -1,4 | 0,0 | -1,8 | 0,2 |
| | 523 / Ende | 0,4 | 0,7 | 2,9 | 0,0 | 1,7 | 0,6 |
| CO11(10) | 253 / Ende | -1,2 | 0,1 | 2,6 | 0,0 | -5,3 | 0,1 |
| | 279 / Ende | -1,9 | 0,3 | 6,7 | 0,0 | -5,3 | 0,2 |
| | 523 / Anfang | 0,1 | 0,7 | -5,3 | 0,0 | -9,8 | -0,7 |
| | 523 / Ende | 0,1 | 0,5 | -4,0 | 0,0 | 9,8 | 0,4 |

### Fehlende Lasten

| Name | X [kN] | Y [kN] | Z [kN] | Mx [kNm] | My [kNm] | Mz [kNm] |
|---|---|---|---|---|---|---|
| CO11(24) | 0,0 | 0,0 | 0,0 | 0,0 | 0,0 | 0,0 |
| CO11(25) | 0,0 | 0,0 | 0,0 | 0,0 | 0,0 | 0,0 |
| CO11(26) | 0,0 | 0,0 | 0,0 | 0,0 | 0,0 | 0,0 |
| CO11(27) | 0,0 | 0,0 | 0,0 | 0,0 | 0,0 | 0,0 |
| CO11(28) | 0,0 | 0,0 | 0,0 | 0,0 | 0,0 | 0,0 |
| CO9(29) | -0,6 | -0,1 | 0,0 | 0,0 | 0,0 | 0,0 |
| CO11(30) | 0,0 | 0,0 | 0,0 | 0,0 | 0,0 | 0,0 |
| CO11(31) | 0,0 | 0,0 | 0,0 | 0,0 | 0,0 | 0,0 |
| CO11(32) | 0,0 | 0,0 | 0,0 | 0,0 | 0,0 | 0,0 |
| CO11(33) | 0,0 | 0,0 | 0,0 | 0,0 | 0,0 | 0,0 |
| CO11(34) | 0,0 | 0,0 | 0,0 | 0,0 | 0,0 | 0,0 |
| CO11(35) | 0,0 | 0,0 | 0,0 | 0,0 | 0,0 | 0,0 |
| CO11(12) | 0,0 | 0,0 | 0,0 | 0,0 | 0,0 | 0,0 |
| CO11(14) | 0,0 | 0,0 | 0,0 | 0,0 | 0,0 | 0,0 |
| CO11(17) | 0,0 | 0,0 | 0,0 | 0,0 | 0,0 | 0,0 |
| CO11(21) | 0,0 | 0,0 | 0,0 | 0,0 | 0,0 | 0,0 |
| CO11(23) | 0,0 | 0,0 | 0,0 | 0,0 | 0,0 | 0,0 |
| CO11(3) | 0,0 | 0,0 | 0,0 | 0,0 | 0,0 | 0,0 |
| CO11(8) | 0,0 | 0,0 | 0,0 | 0,0 | 0,0 | 0,0 |
| CO11(9) | 0,0 | 0,0 | 0,0 | 0,0 | 0,0 | 0,0 |
| CO11(10) | 0,0 | 0,0 | 0,0 | 0,0 | 0,0 | 0,0 |

## Nachweis

### Übersicht

| Name | Wert | Nachweisstatus |
|---|---|---|
| Berechnung | 100,0% | OK |
| Platten | 0,0 < 5,0% | OK |
| Schrauben | 44,9 < 100% | OK |
| Schweißnähte | 33,1 < 100% | OK |
| Beulen | Nicht berechnet | |

## Platten

| Name | Material | $t_p$ [mm] | Lasten | $\sigma_{Ed}$ [MPa] | $\varepsilon_{Pl}$ [%] | $\sigma_{c,Ed}$ [MPa] | Status |
|---|---|---|---|---|---|---|---|
| 253-bfl 1 | Baustahl S 355 | 8,5 | CO11(33) | 82,9 | 0,0 | 0,0 | OK |
| 253-tfl 1 | Baustahl S 355 | 8,5 | CO11(8) | 77,4 | 0,0 | 0,0 | OK |
| 253-w 1 | Baustahl S 355 | 5,6 | CO11(8) | 68,7 | 0,0 | 0,0 | OK |
| 279-bfl 1 | Baustahl S 355 | 8,5 | CO11(33) | 87,8 | 0,0 | 0,0 | OK |
| 279-tfl 1 | Baustahl S 355 | 8,5 | CO11(8) | 94,3 | 0,0 | 0,0 | OK |
| 279-w 1 | Baustahl S 355 | 5,6 | CO11(8) | 75,9 | 0,0 | 0,0 | OK |
| 523-bfl 1 | Baustahl S 355 | 8,5 | CO11(35) | 104,3 | 0,0 | 0,0 | OK |
| 523-tfl 1 | Baustahl S 355 | 8,5 | CO11(35) | 118,0 | 0,0 | 0,0 | OK |
| 523-w 1 | Baustahl S 355 | 5,6 | CO11(35) | 67,3 | 0,0 | 0,0 | OK |
| Verschobene Stirnplatte1a | S 355 | 15,0 | CO11(33) | 130,9 | 0,0 | 19,3 | OK |
| Verschobene Stirnplatte1b | S 355 | 15,0 | CO11(8) | 149,0 | 0,0 | 52,3 | OK |
| STEIFF | S 355 | 10,0 | CO11(8) | 50,3 | 0,0 | 0,0 | OK |
| Verschobene Stirnplatte2a | S 355 | 15,0 | CO11(33) | 122,8 | 0,0 | 24,9 | OK |
| Verschobene Stirnplatte2b | S 355 | 15,0 | CO11(33) | 141,7 | 0,0 | 24,9 | OK |
| STEIFF | S 355 | 10,0 | CO11(8) | 45,2 | 0,0 | 0,0 | OK |

**Bemessungsdaten**

| Material | $f_y$ [MPa] | $\varepsilon_{lim}$ [%] |
|---|---|---|
| Baustahl S 355 | 355,0 | 5,0 |
| S 355 | 355,0 | 5,0 |

**Erläuterung von Symbolen**

| | |
|---|---|
| $t_p$ | Plattendicke |
| $\sigma_{Ed}$ | Vergleichsspannung |
| $\varepsilon_{Pl}$ | Plastische Dehnung |
| $\sigma_{c,Ed}$ | Kontaktspannung |
| $f_y$ | Streckgrenze |
| $\varepsilon_{lim}$ | Grenzwert plastische Dehnung |

*Gesamt, CO11(33)*

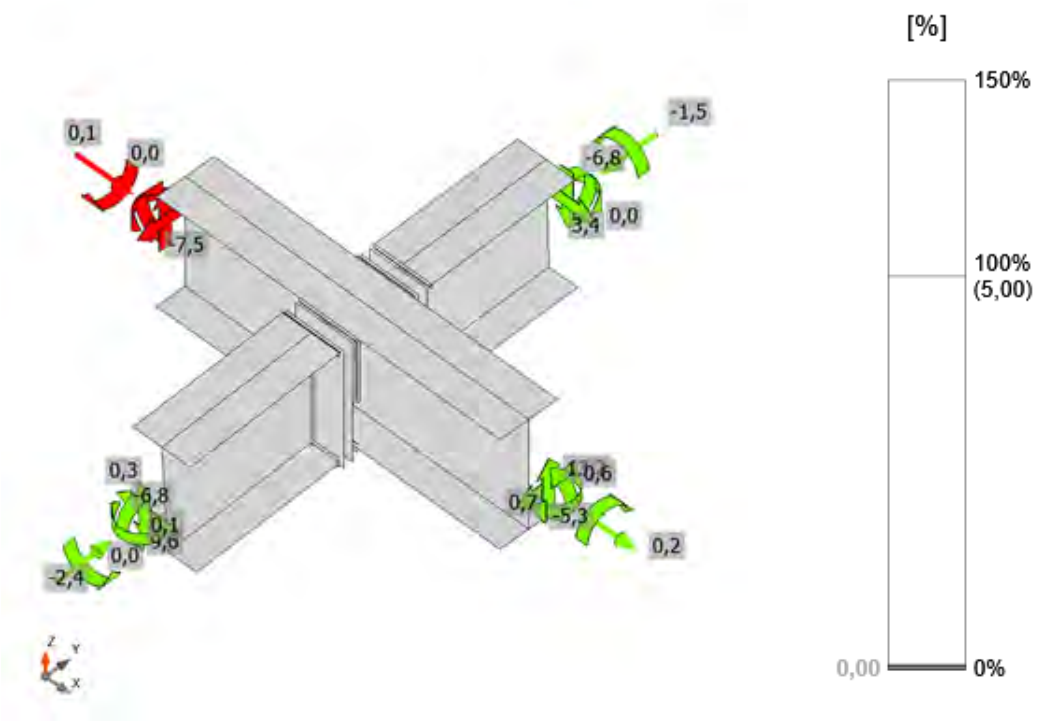


*Dehnung, CO11(33)*

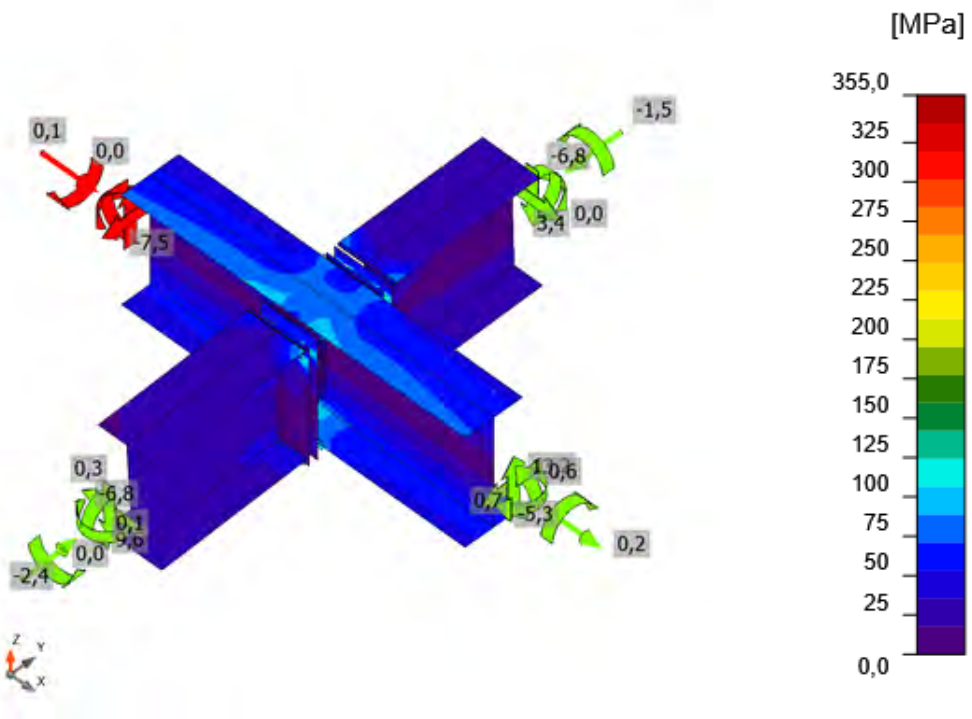


*Vergleichsspannung, CO11(33)*

## Schrauben

| Form | Position | Klasse | Lasten | $F_{t,Ed}$ [kN] | $F_{v,Ed}$ [kN] | $F_{b,Rd}$ [kN] | $Ut_t$ [%] | $Ut_s$ [%] | $Ut_{ts}$ [%] | Konstruktionsregeln | Status |
|---|---|---|---|---|---|---|---|---|---|---|---|
| 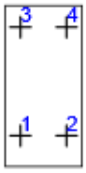 | B1 | M12 8.8 - 1 | CO11(17) | 15,5 | 0,6 | 127,5 | 31,9 | 1,8 | 24,6 | OK | OK |
| | B2 | M12 8.8 - 1 | CO11(8) | 21,8 | 0,4 | 91,6 | 44,9 | 1,2 | 33,3 | OK | OK |
| | B3 | M12 8.8 - 1 | CO11(33) | 19,2 | 2,3 | 108,6 | 39,5 | 7,1 | 35,3 | OK | OK |
| | B4 | M12 8.8 - 1 | CO11(33) | 16,9 | 2,4 | 108,6 | 34,9 | 7,5 | 32,4 | OK | OK |
| 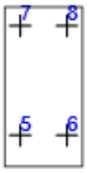 | B5 | M12 8.8 - 1 | CO11(8) | 19,2 | 0,6 | 176,4 | 39,4 | 1,8 | 30,0 | OK | OK |
| | B6 | M12 8.8 - 1 | CO11(17) | 17,8 | 0,6 | 176,4 | 36,7 | 1,8 | 28,0 | OK | OK |
| | B7 | M12 8.8 - 1 | CO11(33) | 19,4 | 0,8 | 108,6 | 39,9 | 2,4 | 30,9 | OK | OK |
| | B8 | M12 8.8 - 1 | CO11(33) | 19,1 | 0,8 | 108,6 | 39,3 | 2,4 | 30,5 | OK | OK |

**Bemessungsdaten**

| Klasse | $F_{t,Rd}$ [kN] | $B_{p,Rd}$ [kN] | $F_{v,Rd}$ [kN] |
|---|---|---|---|
| M12 8.8 - 1 | 48,6 | 210,8 | 32,4 |

**Erläuterung von Symbolen**

| | |
|---|---|
| $F_{t,Ed}$ | Zugkraft |
| $F_{v,Ed}$ | Resultierende der Schraubenscherkräfte Vy und Vz in Scherebenen |
| $F_{b,Rd}$ | Lochleibungstragfähigkeit der Platte nach EN 1993-1-8 Tab. 3.4 |
| $Ut_t$ | Ausnutzung unter Zug |
| $Ut_s$ | Ausnutzung unter Schub |
| $Ut_{ts}$ | Interaktion von Zug und Schub EN_1993-1-8 Tabelle 3.4 |
| $F_{t,Rd}$ | Zugtragfähigkeit der Schraube nach EN 1993-1-8 Tabelle 3.4 |
| $B_{p,Rd}$ | Durchstanztragfähigkeit nach EN 1993-1-8 Tabelle 3.4 |
| $F_{v,Rd}$ | Schertragfähigkeit der Schraube nach EN 1993-1-8 Tabelle 3.4 |

## Schweißnähte

| Position | Kante | $T_w$ [mm] | L [mm] | Lasten | $\sigma_{w,Ed}$ [MPa] | $\varepsilon_{Pl}$ [%] | $\sigma_{\perp}$ [MPa] | $\tau_{\perp}$ [MPa] | $\tau_{\parallel}$ [MPa] | Ut [%] | $Ut_c$ [%] | Konstruktionsregeln | Status |
|---|---|---|---|---|---|---|---|---|---|---|---|---|---|
| Verschobene Stirnplatte1a | 523-tfl 1 | ◢ 4,0 ◣ | 99 | CO11(33) | 113,5 | 0,0 | -38,9 | 42,9 | -44,2 | 26,1 | 21,8 | OK | OK |
| | | ◢ 4,0 ◣ | 99 | CO11(8) | 144,0 | 0,0 | 86,2 | 66,4 | 4,3 | 33,1 | 21,8 | OK | OK |
| Verschobene Stirnplatte1a | 523-bfl 1 | ◢ 4,0 ◣ | 100 | CO11(33) | 100,5 | 0,0 | 82,2 | 19,6 | 27,1 | 23,3 | 16,1 | OK | OK |
| | | ◢ 4,0 ◣ | 100 | CO11(8) | 108,4 | 0,0 | -63,0 | -49,7 | -10,9 | 24,9 | 16,7 | OK | OK |
| Verschobene Stirnplatte1b | 279-bfl 1 | ◢ 4,0 ◣ | 99 | CO11(33) | 65,4 | 0,0 | 38,5 | 22,7 | -20,4 | 15,0 | 11,8 | OK | OK |
| | | ◢ 4,0 ◣ | 99 | CO11(8) | 112,7 | 0,0 | -73,6 | -48,9 | 6,3 | 25,9 | 17,5 | OK | OK |
| Verschobene Stirnplatte1b | 279-tfl 1 | ◢ 4,0 ◣ | 100 | CO11(33) | 82,6 | 0,0 | -34,5 | -36,9 | -22,7 | 19,0 | 15,8 | OK | OK |
| | | ◢ 4,0 ◣ | 100 | CO11(8) | 101,6 | 0,0 | 52,4 | -35,8 | -35,2 | 23,3 | 15,9 | OK | OK |
| Verschobene Stirnplatte1b | 279-w 1 | ◢ 4,0 ◣ | 188 | CO11(8) | 92,9 | 0,0 | 46,4 | 42,9 | 17,9 | 21,3 | 12,3 | OK | OK |
| | | ◢ 4,0 ◣ | 188 | CO11(17) | 84,6 | 0,0 | 39,9 | -43,1 | -1,4 | 19,4 | 11,9 | OK | OK |
| 523-bfl 1 | STEIFF | ◢ 4,0 ◣ | 35 | CO11(33) | 70,8 | 0,0 | -1,9 | -0,6 | 40,8 | 16,3 | 10,9 | OK | OK |
| | | ◢ 4,0 ◣ | 35 | CO11(33) | 72,0 | 0,0 | 0,5 | 0,7 | -41,6 | 16,5 | 10,6 | OK | OK |
| 523-w 1 | STEIFF | ◢ 4,0 ◣ | 159 | CO11(33) | 86,8 | 0,0 | 39,1 | 39,4 | -21,3 | 19,9 | 11,6 | OK | OK |
| | | ◢ 4,0 ◣ | 159 | CO11(33) | 87,2 | 0,0 | 39,5 | -39,2 | 21,9 | 20,0 | 11,6 | OK | OK |
| 523-tfl 1 | STEIFF | ◢ 4,0 ◣ | 35 | CO11(33) | 50,9 | 0,0 | -11,1 | -10,8 | -26,6 | 11,7 | 9,5 | OK | OK |
| | | ◢ 4,0 ◣ | 35 | CO11(33) | 50,1 | 0,0 | -10,7 | 11,0 | 26,0 | 11,5 | 9,5 | OK | OK |
| Verschobene Stirnplatte1a | STEIFF | ◢ 4,0 ◣ | 181 | CO11(33) | 115,5 | 0,0 | 58,7 | 56,1 | -12,1 | 26,5 | 15,1 | OK | OK |
| | | ◢ 4,0 ◣ | 181 | CO11(33) | 110,5 | 0,0 | 52,9 | -55,4 | 7,9 | 25,4 | 13,7 | OK | OK |

| Position | Kante | $T_w$ [mm] | L [mm] | Lasten | $\sigma_{w,Ed}$ [MPa] | $\varepsilon_{Pl}$ [%] | $\sigma_{\perp}$ [MPa] | $\tau_{\perp}$ [MPa] | $\tau_{\parallel}$ [MPa] | Ut [%] | $Ut_c$ [%] | Konstruktionsregeln | Status |
|---|---|---|---|---|---|---|---|---|---|---|---|---|---|
| Verschobene Stirnplatte2a | 523-tfl 1 | ◢ 4,0 ◣ | 100 | CO11(35) | 127,4 | 0,0 | -5,9 | 13,4 | 72,3 | 29,3 | 24,4 | OK | OK |
| | | ◢ 4,0 ◣ | 100 | CO11(8) | 130,1 | 0,0 | 81,1 | 58,7 | 2,3 | 29,9 | 20,8 | OK | OK |
| Verschobene Stirnplatte2a | 523-bfl 1 | ◢ 4,0 ◣ | 100 | CO11(33) | 96,9 | 0,0 | 72,4 | -32,0 | 19,1 | 22,3 | 16,8 | OK | OK |
| | | ◢ 4,0 ◣ | 100 | CO11(8) | 87,3 | 0,0 | -50,7 | 41,0 | 3,0 | 20,1 | 14,1 | OK | OK |
| Verschobene Stirnplatte2b | 253-bfl 1 | ◢ 4,0 ◣ | 100 | CO11(33) | 58,3 | 0,0 | 36,1 | 20,9 | 16,1 | 13,4 | 11,8 | OK | OK |
| | | ◢ 4,0 ◣ | 99 | CO11(8) | 88,1 | 0,0 | -57,4 | -38,4 | 3,3 | 20,2 | 16,0 | OK | OK |
| Verschobene Stirnplatte2b | 253-tfl 1 | ◢ 4,0 ◣ | 99 | CO11(33) | 81,6 | 0,0 | -36,3 | -34,7 | -24,0 | 18,7 | 16,1 | OK | OK |
| | | ◢ 4,0 ◣ | 99 | CO11(8) | 82,5 | 0,0 | 41,5 | -29,6 | -28,6 | 18,9 | 15,3 | OK | OK |
| Verschobene Stirnplatte2b | 253-w 1 | ◢ 4,0 ◣ | 188 | CO11(33) | 85,1 | 0,0 | 41,2 | 41,9 | -9,4 | 19,5 | 11,6 | OK | OK |
| | | ◢ 4,0 ◣ | 188 | CO11(33) | 84,2 | 0,0 | 42,0 | -41,3 | 8,3 | 19,3 | 11,4 | OK | OK |
| 523-bfl 1 | STEIFF | ◢ 4,0 ◣ | 47 | CO11(33) | 42,3 | 0,0 | 13,3 | 12,9 | 19,2 | 9,7 | 7,3 | OK | OK |
| | | ◢ 4,0 ◣ | 47 | CO11(33) | 42,0 | 0,0 | 12,5 | -12,9 | -19,2 | 9,6 | 7,3 | OK | OK |
| 523-w 1 | STEIFF | ◢ 4,0 ◣ | 182 | CO11(33) | 61,5 | 0,0 | 30,4 | 30,6 | 4,2 | 14,1 | 9,3 | OK | OK |
| | | ◢ 4,0 ◣ | 182 | CO11(33) | 60,9 | 0,0 | 30,4 | -30,2 | -3,9 | 14,0 | 9,2 | OK | OK |
| 523-tfl 1 | STEIFF | ◢ 4,0 ◣ | 47 | CO11(33) | 51,6 | 0,0 | -14,9 | -14,7 | 24,4 | 11,8 | 9,1 | OK | OK |
| | | ◢ 4,0 ◣ | 47 | CO11(33) | 51,8 | 0,0 | -14,3 | 14,5 | -24,8 | 11,9 | 9,0 | OK | OK |
| Verschobene Stirnplatte2a | STEIFF | ◢ 4,0 ◣ | 181 | CO11(33) | 95,4 | 0,0 | 47,4 | 47,6 | 4,7 | 21,9 | 13,1 | OK | OK |
| | | ◢ 4,0 ◣ | 181 | CO11(17) | 96,5 | 0,0 | 49,5 | -47,7 | -4,2 | 22,2 | 12,1 | OK | OK |

**Bemessungsdaten**

| Material | $f_u$ [MPa] | $\beta_w$ [-] | $\sigma_{w,Rd}$ [MPa] | 0.9 σ [MPa] |
|---|---|---|---|---|
| S 355 | 490,0 | 0,90 | 435,6 | 352,8 |

**Erläuterung von Symbolen**

| | |
|---|---|
| $T_w$ | Nahtdicke a |
| L | Länge |
| $\sigma_{w,Ed}$ | Vergleichsspannung |
| $\varepsilon_{Pl}$ | Dehnung |
| $\sigma_{\perp}$ | Senkrechte Spannung |
| $\tau_{\perp}$ | Scherspannung senkrecht zur Schweißnahtachse |
| $\tau_{\parallel}$ | Scherspannung parallel zur Schweißnahtachse |
| Ut | Ausnutzung |
| $Ut_c$ | Schätzung der Schweißnahtkapazität |
| ◢ | Kehlnaht |
| $f_u$ | Grenzfestigkeit der Schweißnaht |
| $\beta_w$ | Korrelationsfaktor nach EN 1993-1-8 Tab. 4.1 |
| $\sigma_{w,Rd}$ | Tragfähigkeit der Schweißnaht |
| 0.9 σ | Senkrechter Spannungswiderstand - 0.9*fu / γM2 |

## Beulen

**Die Beulanalyse wurde nicht berechnet.**

## Normeinstellungen

| Position | Wert | Einheit | Bezug |
|---|---|---|---|
| Sicherheitsfaktor $\gamma_{M0}$ | 1,00 | - | EN 1993-1-1 – 6.1 |
| Sicherheitsfaktor $\gamma_{M1}$ | 1,00 | - | EN 1993-1-1 – 6.1 |
| Sicherheitsfaktor $\gamma_{M2}$ | 1,25 | - | EN 1993-1-1 – 6.1 |
| Sicherheitsfaktor $\gamma_{M3}$ | 1,25 | - | EN 1993-1-8 – Table 2.1 |
| Sicherheitsfaktor $\gamma_{C}$ | 1,50 | - | EN 1992-1-1 – 2.4.2.4 |
| Sicherheitsfaktor $\gamma_{Inst}$ | 1,20 | - | EN 1992-4 – Table 4.1 |
| Verbindungskoeffizient βj | 0,67 | - | EN 1993-1-8 – 6.2.5(7) |
| Wirksame Fläche - Einfluss der Netzgröße | 0,10 | - | |
| Reibungsbeiwert - Beton | 0,25 | - | EN 1993-1-8 |
| Reibungskoeffizient bei gleitfesten Verbindungen | 0,30 | - | EN 1993-1-8 – Table 3.7 |
| Plastische Dehnung - Grenzwert | 0,05 | - | EN 1993-1-5 |
| Konstruktionsregeln | Ja | | |
| Distance between bolts [d0] | 2,20 | - | EN 1993-1-8 – Table 3.3 |
| Distance between bolts and edge [d0] | 1,20 | - | EN 1993-1-8 – Table 3.3 |
| Nachweis der Tragfähigkeit bei Betonausbruch | Beide | | |
| Berechnetes αb für Lochleibungsnachweis anwenden. | Ja | | EN 1993-1-8 – Table 3.4 |
| Gerissener Beton | Ja | | EN 1992-4 |
| Überprüfen der lokalen Verformung | Ja | | |
| Lokale Verformung - Grenzwert | 0,03 | - | CIDECT DG 1, 3 – 1.1 |
| Geometrische Nichtlinearität (GMNA) | Ja | | Analyse mit großen Verformungen für Verbindungen mit Hohlprofilen |
| Ausgesteiftes System | Nein | | EN 1993-1-8 – 5.2.2.5 |

| | |
|---|---|
| **Projekt:** | **IdeaStatiCa-Stadion_Fazanerija_JK-6_BR - 1424** |
| **Projektnummer:** | **Detajl D13-O6** |
| **Autor:** | **mag. Igor Gorup dipl. ing.** |

## Projektdaten

| | |
|---|---|
| Projektname | IdeaStatiCa-Stadion_Fazanerija_JK-6_BR - 1424 |
| Projektnummer | Detajl D13-O6 |
| Autor | mag. Igor Gorup dipl. ing. |
| Beschreibung | |
| Datum | 18.06.2025 |
| Norm | EN |

## Material

| | |
|---|---|
| Stahl | Baustahl S 355, Baustahl S 235, S 355 |

# Projektposition 1424

## Bemessung

| | |
|---|---|
| Name | 1424 |
| Beschreibung | |
| Berechnung | Spannung, Dehnung/ Lasten im Gleichgewicht |

### Bauteile

#### Geometrie

| Name | Querschnitt | β – Rotation [°] | Y - Rotation [°] | α - Rotation [°] | Abstand ex [mm] | Abstand ey [mm] | Abstand ez [mm] |
|---|---|---|---|---|---|---|---|
| 353 | 18 - IPE200 | -90,0 | -3,5 | 180,0 | 0 | 0 | 0 |
| 358 | 795 - RHS80x80 | 4,4 | 90,0 | 175,6 | 0 | 0 | 0 |
| 285 | 18 - IPE200 | 0,0 | 0,0 | -180,0 | 0 | 0 | 0 |
| 526 | 18 - IPE200 | -90,0 | -1,4 | 180,0 | 0 | 0 | 0 |

#### Auflager und Kräfte

| Name | Auflager | Kräfte in | X [mm] |
|---|---|---|---|
| 353 / ende | | Position | 0 |
| 358 / anfang | | Position | 0 |
| 285 / anfang | N-Vy-Vz-Mx-My-Mz | Position | 0 |
| 285 / ende | | Position | 0 |
| 526 / anfang | | Position | 0 |

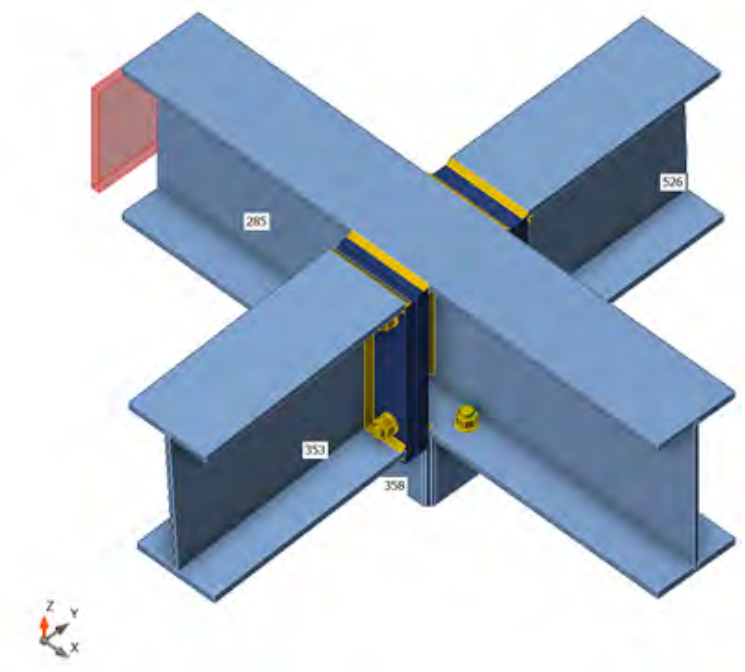

## Querschnitte

| Name | Material |
|---|---|
| 18 - IPE200 | Baustahl S 355 |
| 795 - RHS80x80 | Baustahl S 355 |

## Schrauben

| Name | Durchmesser [mm] | $f_y$ [MPa] | $f_u$ [MPa] | Bruttofläche [$mm^2$] |
|---|---|---|---|---|
| M12 8.8 | 12 | 640,0 | 800,0 | 113 |

## Lasteinwirkungen (Kräfte im Gleichgewicht)

| Name | Bauteil | N [kN] | Vy [kN] | Vz [kN] | Mx [kNm] | My [kNm] | Mz [kNm] |
|---|---|---|---|---|---|---|---|
| CO9(33) | 353 / Ende | -0,4 | 0,1 | -0,8 | 0,0 | 2,3 | 0,2 |
| | 358 / Anfang | 3,2 | 0,1 | -1,0 | 0,0 | -1,6 | -0,2 |
| | 285 / Anfang | 1,3 | 0,1 | 6,7 | 0,0 | -0,9 | 0,0 |
| | 285 / Ende | -0,5 | 0,0 | -1,1 | 0,0 | 2,5 | 0,0 |
| | 526 / Anfang | 0,4 | 0,2 | -1,5 | 0,0 | -2,5 | -0,3 |
| CO11(34) | 353 / Ende | 0,7 | -0,1 | 5,6 | 0,0 | -4,9 | -0,2 |
| | 358 / Anfang | 10,6 | 0,0 | 0,9 | 0,0 | 1,7 | 0,1 |
| | 285 / Anfang | -3,0 | 0,3 | -7,9 | 0,0 | 4,9 | -0,3 |
| | 285 / Ende | 1,8 | 0,2 | 9,2 | 0,0 | -6,6 | 0,2 |
| | 526 / Anfang | -0,8 | -0,2 | 3,6 | 0,0 | 5,0 | 0,3 |
| CO11(35) | 353 / Ende | 0,4 | 0,1 | 5,9 | 0,0 | -2,2 | 0,2 |
| | 358 / Anfang | 12,0 | 0,5 | 0,6 | 0,0 | 1,2 | -1,8 |
| | 285 / Anfang | -1,1 | 0,5 | -7,6 | 0,0 | 3,1 | -0,4 |
| | 285 / Ende | 0,0 | -0,9 | 14,5 | 0,0 | -4,3 | -0,5 |
| | 526 / Anfang | -0,2 | -0,6 | -0,9 | 0,0 | 0,3 | 0,7 |
| CO11(36) | 353 / Ende | 0,0 | 0,2 | 3,2 | 0,0 | 0,1 | 0,3 |
| | 358 / Anfang | 9,1 | 0,4 | 0,0 | 0,0 | 0,0 | -1,3 |
| | 285 / Anfang | 0,9 | 0,4 | -1,1 | 0,0 | 1,3 | -0,2 |
| | 285 / Ende | -1,0 | -0,7 | 8,7 | 0,0 | -1,3 | -0,4 |
| | 526 / Anfang | 0,1 | -0,3 | -1,6 | 0,0 | -1,5 | 0,4 |
| CO11(37) | 353 / Ende | 0,8 | -0,2 | 4,7 | 0,0 | -5,6 | -0,3 |
| | 358 / Anfang | 7,5 | -0,1 | 0,9 | 0,0 | 1,7 | 0,3 |
| | 285 / Anfang | -3,1 | 0,0 | -8,7 | 0,0 | 4,1 | -0,1 |
| | 285 / Ende | 1,9 | 0,3 | 7,4 | 0,0 | -5,8 | 0,3 |
| | 526 / Anfang | -0,7 | -0,1 | 4,2 | 0,0 | 6,0 | 0,2 |
| CO11(38) | 353 / Ende | 0,7 | -0,2 | 4,5 | 0,0 | -5,2 | -0,3 |
| | 358 / Anfang | 7,3 | 0,1 | 0,8 | 0,0 | 1,6 | -0,1 |
| | 285 / Anfang | -2,6 | 0,0 | -9,1 | 0,0 | 3,5 | -0,1 |
| | 285 / Ende | 1,4 | 0,1 | 8,7 | 0,0 | -5,1 | 0,1 |
| | 526 / Anfang | -0,5 | -0,2 | 3,2 | 0,0 | 5,1 | 0,3 |
| CO11(39) | 353 / Ende | 0,5 | -0,1 | 3,3 | 0,0 | -3,7 | -0,2 |
| | 358 / Anfang | 7,7 | -0,2 | 0,3 | 0,0 | 0,7 | 0,8 |
| | 285 / Anfang | -1,4 | 0,1 | -3,5 | 0,0 | 3,7 | -0,1 |
| | 285 / Ende | 1,0 | 0,5 | 4,2 | 0,0 | -4,4 | 0,4 |
| | 526 / Anfang | -0,6 | 0,1 | 3,7 | 0,0 | 4,5 | -0,1 |
| CO11(40) | 353 / Ende | 0,4 | 0,0 | 4,9 | 0,0 | -2,8 | 0,1 |
| | 358 / Anfang | 8,6 | 0,5 | 0,7 | 0,0 | 1,2 | -1,9 |
| | 285 / Anfang | -1,0 | 0,2 | -8,8 | 0,0 | 1,7 | -0,2 |
| | 285 / Ende | -0,2 | -0,9 | 13,5 | 0,0 | -2,9 | -0,6 |
| | 526 / Anfang | 0,0 | -0,6 | -0,9 | 0,0 | 0,8 | 0,7 |
| CO11(41) | 353 / Ende | 0,4 | -0,1 | 3,0 | 0,0 | -2,9 | -0,1 |
| | 358 / Anfang | 7,5 | -0,2 | 0,3 | 0,0 | 0,6 | 0,8 |
| | 285 / Anfang | -1,2 | 0,1 | -1,8 | 0,0 | 3,5 | -0,1 |
| | 285 / Ende | 1,0 | 0,5 | 2,9 | 0,0 | -4,1 | 0,4 |
| | 526 / Anfang | -0,6 | 0,2 | 3,4 | 0,0 | 3,8 | -0,2 |

| Name | Bauteil | N [kN] | Vy [kN] | Vz [kN] | Mx [kNm] | My [kNm] | Mz [kNm] |
|---|---|---|---|---|---|---|---|
| CO11(42) | 353 / Ende | 0,6 | -0,1 | 4,2 | 0,0 | -4,3 | -0,2 |
| | 358 / Anfang | 9,7 | -0,2 | 0,4 | 0,0 | 0,9 | 0,6 |
| | 285 / Anfang | -1,6 | 0,2 | -4,5 | 0,0 | 4,3 | -0,1 |
| | 285 / Ende | 1,1 | 0,4 | 6,0 | 0,0 | -5,2 | 0,3 |
| | 526 / Anfang | -0,7 | 0,1 | 4,0 | 0,0 | 4,9 | -0,1 |
| CO11(21) | 353 / Ende | 0,4 | -0,1 | 3,0 | 0,0 | -2,8 | -0,1 |
| | 358 / Anfang | 3,6 | 0,5 | 0,6 | 0,0 | 1,1 | -1,5 |
| | 285 / Anfang | -1,0 | -0,1 | -8,3 | 0,0 | 0,3 | 0,0 |
| | 285 / Ende | -0,1 | -0,8 | 9,5 | 0,0 | -1,4 | -0,5 |
| | 526 / Anfang | 0,2 | -0,5 | -0,6 | 0,0 | 1,3 | 0,5 |
| CO11(22) | 353 / Ende | 0,1 | 0,2 | 5,1 | 0,0 | 0,0 | 0,4 |
| | 358 / Anfang | 15,3 | 0,2 | 0,0 | 0,0 | 0,1 | -0,8 |
| | 285 / Anfang | 0,3 | 0,8 | 0,1 | 0,0 | 4,2 | -0,5 |
| | 285 / Ende | -0,4 | -0,5 | 10,3 | 0,0 | -4,3 | -0,2 |
| | 526 / Anfang | -0,3 | -0,3 | -0,3 | 0,0 | -0,9 | 0,3 |
| CO11(23) | 353 / Ende | 0,5 | 0,0 | 5,2 | 0,0 | -3,5 | 0,0 |
| | 358 / Anfang | 9,4 | 0,5 | 0,7 | 0,0 | 1,3 | -1,6 |
| | 285 / Anfang | -1,4 | 0,2 | -9,1 | 0,0 | 2,5 | -0,1 |
| | 285 / Ende | 0,1 | -0,7 | 13,3 | 0,0 | -3,8 | -0,4 |
| | 526 / Anfang | -0,1 | -0,5 | 0,0 | 0,0 | 1,9 | 0,6 |
| CO11(26) | 353 / Ende | 0,7 | -0,1 | 5,6 | 0,0 | -4,8 | -0,2 |
| | 358 / Anfang | 10,6 | 0,1 | 0,8 | 0,0 | 1,6 | -0,4 |
| | 285 / Anfang | -2,5 | 0,2 | -8,5 | 0,0 | 4,4 | -0,2 |
| | 285 / Ende | 1,3 | -0,1 | 10,7 | 0,0 | -6,0 | 0,0 |
| | 526 / Anfang | -0,6 | -0,3 | 2,8 | 0,0 | 4,4 | 0,3 |
| CO11(27) | 353 / Ende | 0,1 | 0,3 | 5,1 | 0,0 | 0,2 | 0,4 |
| | 358 / Anfang | 14,7 | 0,4 | 0,0 | 0,0 | 0,2 | -1,4 |
| | 285 / Anfang | 0,6 | 0,7 | -0,7 | 0,0 | 3,3 | -0,4 |
| | 285 / Ende | -0,8 | -0,7 | 11,6 | 0,0 | -3,4 | -0,4 |
| | 526 / Anfang | -0,2 | -0,4 | -1,3 | 0,0 | -1,6 | 0,4 |
| CO11(28) | 353 / Ende | 0,7 | -0,2 | 3,8 | 0,0 | -5,0 | -0,3 |
| | 358 / Anfang | 5,5 | -0,1 | 0,8 | 0,0 | 1,5 | 0,5 |
| | 285 / Anfang | -2,9 | 0,0 | -7,6 | 0,0 | 3,4 | -0,1 |
| | 285 / Ende | 1,8 | 0,4 | 5,5 | 0,0 | -4,9 | 0,3 |
| | 526 / Anfang | -0,7 | -0,1 | 3,9 | 0,0 | 5,5 | 0,1 |
| CO11(29) | 353 / Ende | 0,5 | -0,1 | 4,0 | 0,0 | -3,9 | -0,1 |
| | 358 / Anfang | 6,2 | 0,4 | 0,7 | 0,0 | 1,3 | -1,4 |
| | 285 / Anfang | -1,4 | -0,1 | -9,6 | 0,0 | 1,6 | 0,0 |
| | 285 / Ende | 0,2 | -0,6 | 11,2 | 0,0 | -2,9 | -0,4 |
| | 526 / Anfang | 0,0 | -0,4 | 0,5 | 0,0 | 2,5 | 0,5 |
| CO11(31) | 353 / Ende | 0,4 | 0,1 | 6,0 | 0,0 | -2,5 | 0,1 |
| | 358 / Anfang | 16,5 | 0,1 | 0,3 | 0,0 | 0,7 | -0,2 |
| | 285 / Anfang | -0,9 | 0,6 | -2,3 | 0,0 | 5,6 | -0,4 |
| | 285 / Ende | 0,5 | -0,1 | 10,7 | 0,0 | -6,3 | 0,0 |
| | 526 / Anfang | -0,6 | -0,2 | 2,0 | 0,0 | 2,3 | 0,2 |
| CO11(32) | 353 / Ende | 0,3 | 0,2 | 5,6 | 0,0 | -1,1 | 0,3 |
| | 358 / Anfang | 15,7 | 0,1 | 0,1 | 0,0 | 0,4 | -0,2 |

| Name | Bauteil | N [kN] | Vy [kN] | Vz [kN] | Mx [kNm] | My [kNm] | Mz [kNm] |
|---|---|---|---|---|---|---|---|
| | 285 / Anfang | -0,5 | 0,7 | -0,4 | 0,0 | 5,3 | -0,5 |
| | 285 / Ende | 0,4 | -0,1 | 9,2 | 0,0 | -5,7 | 0,0 |
| | 526 / Anfang | -0,6 | -0,2 | 1,4 | 0,0 | 1,0 | 0,2 |
| CO11(13) | 353 / Ende | 0,8 | -0,2 | 5,8 | 0,0 | -5,2 | -0,2 |
| | 358 / Anfang | 10,8 | 0,0 | 0,9 | 0,0 | 1,7 | 0,1 |
| | 285 / Anfang | -3,0 | 0,2 | -8,1 | 0,0 | 5,0 | -0,3 |
| | 285 / Ende | 1,8 | 0,2 | 9,4 | 0,0 | -6,7 | 0,2 |
| | 526 / Anfang | -0,7 | -0,2 | 3,8 | 0,0 | 5,3 | 0,3 |
| CO11(14) | 353 / Ende | 0,5 | -0,1 | 3,9 | 0,0 | -3,5 | -0,1 |
| | 358 / Anfang | 5,6 | 0,5 | 0,7 | 0,0 | 1,2 | -1,7 |
| | 285 / Anfang | -1,2 | -0,1 | -9,5 | 0,0 | 0,9 | 0,0 |
| | 285 / Ende | -0,1 | -0,8 | 11,5 | 0,0 | -2,2 | -0,5 |
| | 526 / Anfang | 0,1 | -0,5 | -0,3 | 0,0 | 1,8 | 0,6 |
| CO11(15) | 353 / Ende | 0,6 | -0,1 | 5,4 | 0,0 | -4,1 | -0,1 |
| | 358 / Anfang | 10,4 | 0,0 | 0,8 | 0,0 | 1,5 | 0,2 |
| | 285 / Anfang | -2,8 | 0,3 | -6,3 | 0,0 | 4,8 | -0,3 |
| | 285 / Ende | 1,7 | 0,2 | 8,0 | 0,0 | -6,2 | 0,2 |
| | 526 / Anfang | -0,7 | -0,2 | 3,3 | 0,0 | 4,3 | 0,2 |
| CO11(18) | 353 / Ende | 0,2 | 0,1 | 2,5 | 0,0 | -1,4 | 0,1 |
| | 358 / Anfang | 6,1 | 0,4 | 0,1 | 0,0 | 0,2 | -1,2 |
| | 285 / Anfang | 0,6 | 0,1 | -3,7 | 0,0 | 0,6 | 0,0 |
| | 285 / Ende | -0,9 | -0,6 | 8,1 | 0,0 | -0,8 | -0,4 |
| | 526 / Anfang | 0,2 | -0,3 | -0,8 | 0,0 | 0,2 | 0,3 |
| CO11(3) | 353 / Ende | 0,0 | 0,3 | 4,2 | 0,0 | 0,8 | 0,4 |
| | 358 / Anfang | 12,6 | 0,3 | -0,1 | 0,0 | 0,0 | -1,2 |
| | 285 / Anfang | 0,8 | 0,7 | 0,3 | 0,0 | 2,7 | -0,4 |
| | 285 / Ende | -0,8 | -0,7 | 9,7 | 0,0 | -2,7 | -0,4 |
| | 526 / Anfang | -0,1 | -0,3 | -1,6 | 0,0 | -2,0 | 0,4 |
| CO11(4) | 353 / Ende | 0,7 | 0,0 | 6,6 | 0,0 | -4,0 | 0,0 |
| | 358 / Anfang | 13,8 | 0,2 | 0,8 | 0,0 | 1,5 | -0,5 |
| | 285 / Anfang | -2,4 | 0,4 | -7,2 | 0,0 | 5,3 | -0,4 |
| | 285 / Ende | 1,3 | -0,2 | 12,2 | 0,0 | -6,8 | 0,0 |
| | 526 / Anfang | -0,6 | -0,3 | 2,2 | 0,0 | 3,5 | 0,4 |
| CO11(5) | 353 / Ende | 0,3 | 0,0 | 3,5 | 0,0 | -2,4 | 0,1 |
| | 358 / Anfang | 8,6 | 0,3 | 0,2 | 0,0 | 0,4 | -1,0 |
| | 285 / Anfang | 0,1 | 0,1 | -4,9 | 0,0 | 1,9 | 0,0 |
| | 285 / Ende | -0,5 | -0,5 | 9,7 | 0,0 | -2,3 | -0,3 |
| | 526 / Anfang | 0,0 | -0,2 | 0,3 | 0,0 | 1,4 | 0,3 |
| CO11(7) | 353 / Ende | 0,3 | 0,1 | 4,5 | 0,0 | -1,6 | 0,2 |
| | 358 / Anfang | 11,8 | 0,4 | 0,1 | 0,0 | 0,4 | -1,3 |
| | 285 / Anfang | 0,3 | 0,4 | -3,9 | 0,0 | 2,7 | -0,2 |
| | 285 / Ende | -0,6 | -0,7 | 11,6 | 0,0 | -3,1 | -0,4 |
| | 526 / Anfang | -0,1 | -0,3 | -0,3 | 0,0 | 0,4 | 0,4 |

### Fehlende Lasten

| Name | X [kN] | Y [kN] | Z [kN] | Mx [kNm] | My [kNm] | Mz [kNm] |
|---|---|---|---|---|---|---|
| CO9(33) | -0,5 | -0,2 | 0,0 | 0,0 | 0,0 | 0,0 |
| CO11(34) | 0,0 | 0,0 | 0,0 | 0,0 | 0,0 | 0,0 |
| CO11(35) | 0,0 | 0,0 | 0,0 | 0,0 | 0,0 | 0,0 |
| CO11(36) | 0,0 | 0,0 | 0,0 | 0,0 | 0,0 | 0,0 |
| CO11(37) | 0,0 | 0,0 | 0,0 | 0,0 | 0,0 | 0,0 |
| CO11(38) | 0,0 | 0,0 | 0,0 | 0,0 | 0,0 | 0,0 |
| CO11(39) | 0,0 | 0,0 | 0,0 | 0,0 | 0,0 | 0,0 |
| CO11(40) | 0,0 | 0,0 | 0,0 | 0,0 | 0,0 | 0,0 |
| CO11(41) | 0,0 | 0,0 | 0,0 | 0,0 | 0,0 | 0,0 |
| CO11(42) | 0,0 | 0,0 | 0,0 | 0,0 | 0,0 | 0,0 |
| CO11(21) | 0,0 | 0,0 | 0,0 | 0,0 | 0,0 | 0,0 |
| CO11(22) | 0,0 | 0,0 | 0,0 | 0,0 | 0,0 | 0,0 |
| CO11(23) | 0,0 | 0,0 | 0,0 | 0,0 | 0,0 | 0,0 |
| CO11(26) | 0,0 | 0,0 | 0,0 | 0,0 | 0,0 | 0,0 |
| CO11(27) | 0,0 | 0,0 | 0,0 | 0,0 | 0,0 | 0,0 |
| CO11(28) | 0,0 | 0,0 | 0,0 | 0,0 | 0,0 | 0,0 |
| CO11(29) | 0,0 | 0,0 | 0,0 | 0,0 | 0,0 | 0,0 |
| CO11(31) | 0,0 | 0,0 | 0,0 | 0,0 | 0,0 | 0,0 |
| CO11(32) | 0,0 | 0,0 | 0,0 | 0,0 | 0,0 | 0,0 |
| CO11(13) | 0,0 | 0,0 | 0,0 | 0,0 | 0,0 | 0,0 |
| CO11(14) | 0,0 | 0,0 | 0,0 | 0,0 | 0,0 | 0,0 |
| CO11(15) | 0,0 | 0,0 | 0,0 | 0,0 | 0,0 | 0,0 |
| CO11(18) | 0,0 | 0,0 | 0,0 | 0,0 | 0,0 | 0,0 |
| CO11(3) | 0,0 | 0,0 | 0,0 | 0,0 | 0,0 | 0,0 |
| CO11(4) | 0,0 | 0,0 | 0,0 | 0,0 | 0,0 | 0,0 |
| CO11(5) | 0,0 | 0,0 | 0,0 | 0,0 | 0,0 | 0,0 |
| CO11(7) | 0,0 | 0,0 | 0,0 | 0,0 | 0,0 | 0,0 |

## Nachweis

### Übersicht

| Name | Wert | Nachweisstatus |
|---|---|---|
| Berechnung | 100,0% | OK |
| Platten | 0,0 < 5,0% | OK |
| Lokale Verformung | 0,0 < 3% | OK |
| Schrauben | 48,6 < 100% | OK |
| Schweißnähte | 98,0 < 100% | OK |
| Beulen | Nicht berechnet | |

## Platten

| Name | Material | $t_p$ [mm] | Lasten | $\sigma_{Ed}$ [MPa] | $\varepsilon_{Pl}$ [%] | $\sigma_{c,Ed}$ [MPa] | Status |
|---|---|---|---|---|---|---|---|
| 353-bfl 1 | Baustahl S 355 | 8,5 | CO11(37) | 88,2 | 0,0 | 0,0 | OK |
| 353-tfl 1 | Baustahl S 355 | 8,5 | CO11(37) | 51,6 | 0,0 | 0,0 | OK |
| 353-w 1 | Baustahl S 355 | 5,6 | CO11(37) | 64,8 | 0,0 | 0,0 | OK |
| 358 | Baustahl S 355 | 4,0 | CO11(40) | 306,6 | 0,0 | 0,0 | OK |
| 285-bfl 1 | Baustahl S 355 | 8,5 | CO11(37) | 68,1 | 0,0 | 0,0 | OK |
| 285-tfl 1 | Baustahl S 355 | 8,5 | CO11(40) | 274,5 | 0,0 | 26,4 | OK |
| 285-w 1 | Baustahl S 355 | 5,6 | CO11(40) | 117,2 | 0,0 | 0,0 | OK |
| 526-bfl 1 | Baustahl S 355 | 8,5 | CO11(37) | 79,4 | 0,0 | 0,0 | OK |
| 526-tfl 1 | Baustahl S 355 | 8,5 | CO11(37) | 50,6 | 0,0 | 0,0 | OK |
| 526-w 1 | Baustahl S 355 | 5,6 | CO11(37) | 62,7 | 0,0 | 0,0 | OK |
| Verschobene Stirnplatte1a | S 355 | 15,0 | CO11(37) | 120,0 | 0,0 | 13,4 | OK |
| Verschobene Stirnplatte1b | S 355 | 15,0 | CO11(37) | 136,3 | 0,0 | 13,2 | OK |
| STEIFF | S 355 | 10,0 | CO11(40) | 72,6 | 0,0 | 0,0 | OK |
| Verschobene Stirnplatte2a | S 355 | 15,0 | CO11(37) | 108,7 | 0,0 | 15,6 | OK |
| Verschobene Stirnplatte2b | S 355 | 15,0 | CO11(37) | 132,7 | 0,0 | 15,6 | OK |
| STEIFF | S 355 | 10,0 | CO11(37) | 39,1 | 0,0 | 0,0 | OK |
| Stirnblech1 | S 355 | 10,0 | CO11(40) | 330,3 | 0,0 | 98,7 | OK |

### Bemessungsdaten

| Material | $f_y$ [MPa] | $\varepsilon_{lim}$ [%] |
|---|---|---|
| Baustahl S 355 | 355,0 | 5,0 |
| S 355 | 355,0 | 5,0 |

### Erläuterung von Symbolen

| | |
|---|---|
| $t_p$ | Plattendicke |
| $\sigma_{Ed}$ | Vergleichsspannung |
| $\varepsilon_{Pl}$ | Plastische Dehnung |
| $\sigma_{c,Ed}$ | Kontaktspannung |
| $f_y$ | Streckgrenze |
| $\varepsilon_{lim}$ | Grenzwert plastische Dehnung |

## Lokale Verformung

| Name | $d_0$ [mm] | Lasten | $\delta$ [mm] | $\delta_{lim}$ [mm] | $\delta/d_0$ [%] | Nachweisstatus |
|---|---|---|---|---|---|---|
| 358 | 80 | CO11(7) | 0 | 2 | 0,0 | OK |

### Erläuterung von Symbolen

| | |
|---|---|
| $d_0$ | Querschnittsgröße |
| $\delta$ | Lokale Verformung im Querschnitt |
| $\delta_{lim}$ | Zulässige Verformung |

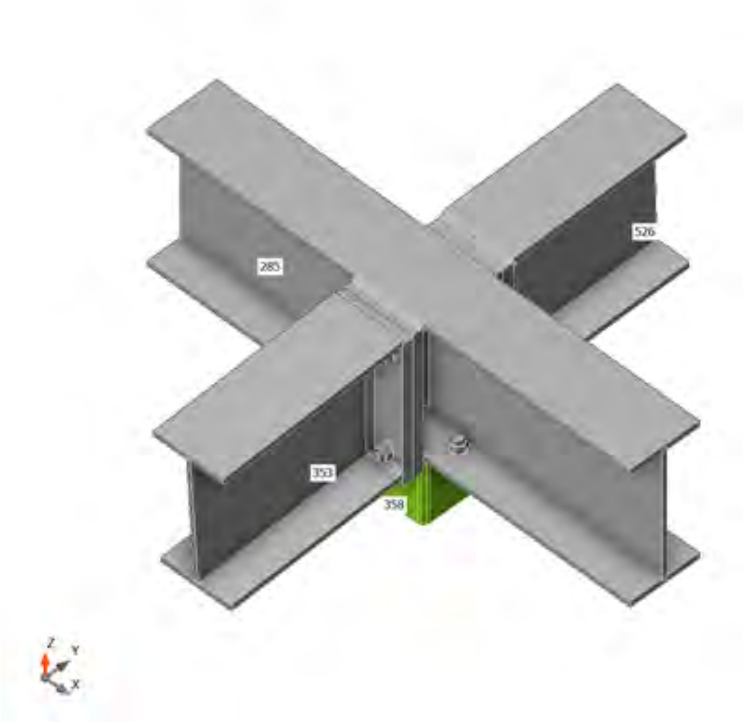


*Gesamt, CO11(40)*

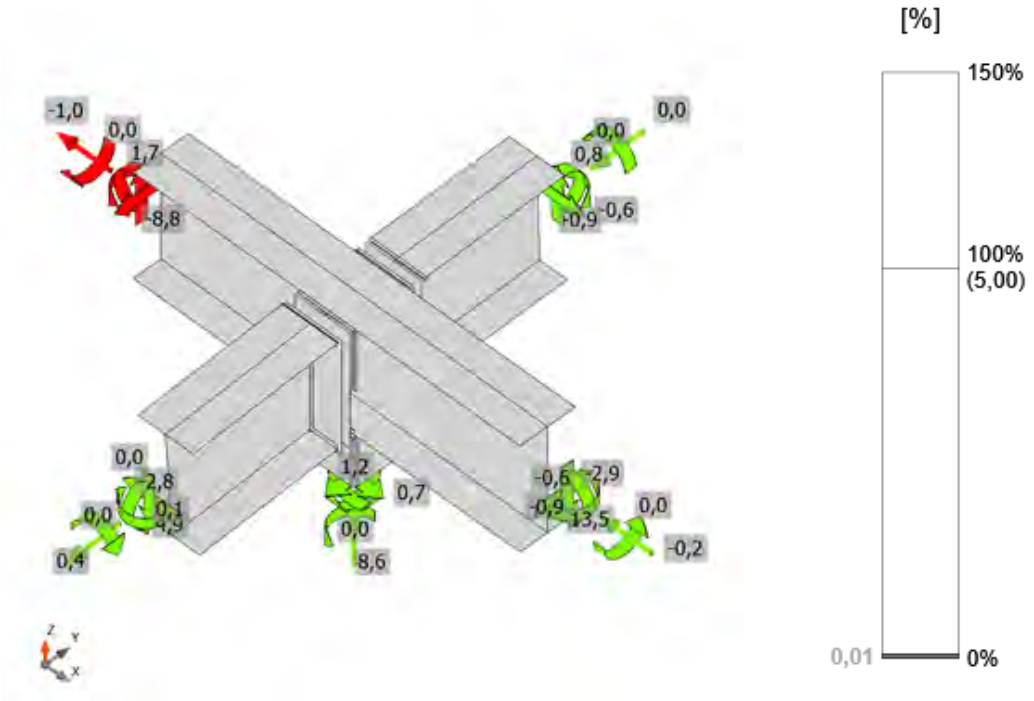


*Dehnung, CO11(40)*

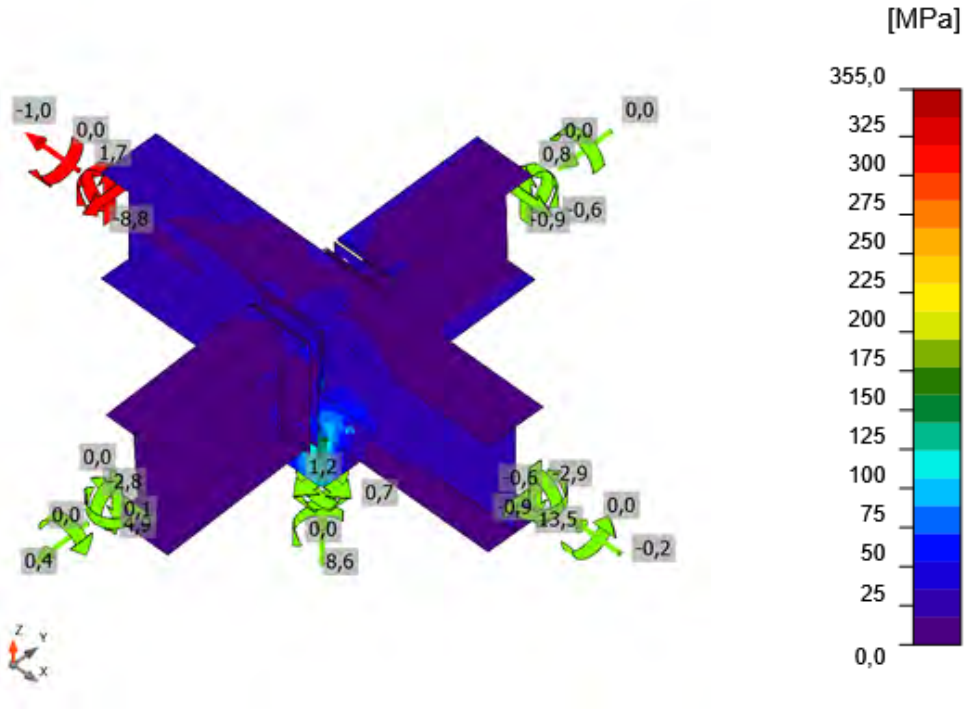


*Vergleichsspannung, CO11(40)*

## Schrauben

| Form | Position | Klasse | Lasten | $F_{t,Ed}$ [kN] | $F_{v,Ed}$ [kN] | $F_{b,Rd}$ [kN] | $Ut_t$ [%] | $Ut_s$ [%] | $Ut_{ts}$ [%] | Konstruktionsregeln | Status |
|---|---|---|---|---|---|---|---|---|---|---|---|
| 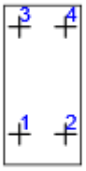 | B1 | M12 8.8 - 1 | CO9(33) | 8,3 | 0,2 | 105,5 | 17,0 | 0,6 | 12,8 | OK | OK |
| | B2 | M12 8.8 - 1 | CO9(33) | 5,7 | 0,2 | 120,2 | 11,7 | 0,6 | 8,9 | OK | OK |
| | B3 | M12 8.8 - 1 | CO11(37) | 14,8 | 1,2 | 108,6 | 30,4 | 3,7 | 25,4 | OK | OK |
| | B4 | M12 8.8 - 1 | CO11(37) | 18,0 | 1,1 | 108,6 | 37,0 | 3,5 | 29,9 | OK | OK |
| 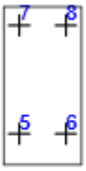 | B5 | M12 8.8 - 1 | CO9(33) | 9,0 | 0,4 | 149,9 | 18,6 | 1,2 | 14,5 | OK | OK |
| | B6 | M12 8.8 - 1 | CO11(3) | 8,7 | 0,4 | 130,7 | 17,9 | 1,2 | 14,0 | OK | OK |
| | B7 | M12 8.8 - 1 | CO11(37) | 16,7 | 0,9 | 108,6 | 34,3 | 2,9 | 27,4 | OK | OK |
| | B8 | M12 8.8 - 1 | CO11(37) | 17,9 | 1,0 | 108,6 | 36,9 | 2,9 | 29,3 | OK | OK |
| 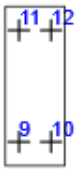 | B9 | M12 8.8 - 2 | CO11(28) | 10,2 | 0,2 | 52,2 | 21,1 | 0,6 | 15,7 | OK | OK |
| | B10 | M12 8.8 - 2 | CO11(40) | 23,6 | 0,6 | 60,3 | 48,6 | 2,0 | 36,7 | OK | OK |
| | B11 | M12 8.8 - 2 | CO9(33) | 8,2 | 0,3 | 62,4 | 16,8 | 1,1 | 13,1 | OK | OK |
| | B12 | M12 8.8 - 2 | CO11(40) | 14,4 | 0,3 | 71,0 | 29,7 | 0,9 | 22,1 | OK | OK |

**Bemessungsdaten**

| Klasse | $F_{t,Rd}$ [kN] | $B_{p,Rd}$ [kN] | $F_{v,Rd}$ [kN] |
|---|---|---|---|
| M12 8.8 - 1 | 48,6 | 210,8 | 32,4 |
| M12 8.8 - 2 | 48,6 | 119,4 | 32,4 |

**Erläuterung von Symbolen**

| | |
|---|---|
| $F_{t,Ed}$ | Zugkraft |
| $F_{v,Ed}$ | Resultierende der Schraubenscherkräfte Vy und Vz in Scherebenen |
| $F_{b,Rd}$ | Lochleibungstragfähigkeit der Platte nach EN 1993-1-8 Tab. 3.4 |
| $Ut_t$ | Ausnutzung unter Zug |
| $Ut_s$ | Ausnutzung unter Schub |
| $Ut_{ts}$ | Interaktion von Zug und Schub EN_1993-1-8 Tabelle 3.4 |
| $F_{t,Rd}$ | Zugtragfähigkeit der Schraube nach EN 1993-1-8 Tabelle 3.4 |
| $B_{p,Rd}$ | Durchstanztragfähigkeit nach EN 1993-1-8 Tabelle 3.4 |
| $F_{v,Rd}$ | Schertragfähigkeit der Schraube nach EN 1993-1-8 Tabelle 3.4 |

## Schweißnähte

| Position | Kante | $T_w$ [mm] | L [mm] | Lasten | $\sigma_{w,Ed}$ [MPa] | $\varepsilon_{Pl}$ [%] | $\sigma_{\perp}$ [MPa] | $\tau_{\perp}$ [MPa] | $\tau_{\parallel}$ [MPa] | Ut [%] | $Ut_c$ [%] | Konstruktionsregeln | Status |
|---|---|---|---|---|---|---|---|---|---|---|---|---|---|
| Verschobene Stirnplatte1a | 285-tfl 1 | ◢ 4,0 ◣ | 99 | CO11(37) | 138,5 | 0,0 | -60,6 | 64,0 | -32,9 | 31,8 | 24,3 | OK | OK |
| | | ◢ 4,0 ◣ | 99 | CO11(13) | 129,3 | 0,0 | -64,5 | -46,1 | 45,4 | 29,7 | 17,2 | OK | OK |
| Verschobene Stirnplatte1a | 285-bfl 1 | ◢ 4,0 ◣ | 100 | CO11(37) | 100,0 | 0,0 | 76,6 | 37,1 | 1,6 | 23,0 | 13,4 | OK | OK |
| | | ◢ 4,0 ◣ | 100 | CO11(37) | 45,2 | 0,0 | 10,4 | 21,2 | -13,9 | 10,4 | 8,5 | OK | OK |
| Verschobene Stirnplatte1b | 353-bfl 1 | ◢ 4,0 ◣ | 99 | CO11(37) | 65,1 | 0,0 | 38,2 | 22,9 | 20,1 | 14,9 | 11,8 | OK | OK |
| | | ◢ 4,0 ◣ | 99 | CO9(33) | 42,5 | 0,0 | -27,7 | -18,4 | -2,5 | 9,8 | 8,2 | OK | OK |
| Verschobene Stirnplatte1b | 353-tfl 1 | ◢ 4,0 ◣ | 99 | CO11(37) | 79,0 | 0,0 | -38,3 | -39,9 | 1,7 | 18,1 | 12,6 | OK | OK |
| | | ◢ 4,0 ◣ | 99 | CO11(37) | 66,3 | 0,0 | -34,1 | 32,7 | -2,7 | 15,2 | 10,6 | OK | OK |
| Verschobene Stirnplatte1b | 353-w 1 | ◢ 4,0 ◣ | 188 | CO11(37) | 72,3 | 0,0 | 36,8 | 35,0 | -8,3 | 16,6 | 10,1 | OK | OK |
| | | ◢ 4,0 ◣ | 188 | CO11(37) | 68,2 | 0,0 | 32,5 | -34,2 | -5,5 | 15,7 | 10,3 | OK | OK |
| 285-bfl 1 | STEIFF | ◢ 4,0 ◣ | 35 | CO11(37) | 48,5 | 0,0 | -3,8 | -4,7 | 27,5 | 11,1 | 9,7 | OK | OK |
| | | ◢ 4,0 ◣ | 35 | CO11(37) | 48,1 | 0,0 | -6,7 | 5,8 | -26,9 | 11,0 | 9,6 | OK | OK |
| 285-w 1 | STEIFF | ◢ 4,0 ◣ | 159 | CO11(40) | 72,3 | 0,0 | -0,4 | -2,3 | 41,7 | 16,6 | 11,4 | OK | OK |
| | | ◢ 4,0 ◣ | 159 | CO11(40) | 74,8 | 0,0 | -3,0 | 1,1 | -43,1 | 17,2 | 11,4 | OK | OK |
| 285-tfl 1 | STEIFF | ◢ 4,0 ◣ | 35 | CO11(40) | 114,3 | 0,0 | -45,0 | -39,7 | -45,8 | 26,2 | 17,2 | OK | OK |
| | | ◢ 4,0 ◣ | 35 | CO11(40) | 96,8 | 0,0 | -24,6 | 29,9 | 45,1 | 22,2 | 15,3 | OK | OK |
| Verschobene Stirnplatte1a | STEIFF | ◢ 4,0 ◣ | 181 | CO11(37) | 90,9 | 0,0 | 42,2 | 46,3 | -4,4 | 20,9 | 11,8 | OK | OK |
| | | ◢ 4,0 ◣ | 181 | CO11(37) | 100,1 | 0,0 | 52,4 | -48,2 | 10,0 | 23,0 | 12,6 | OK | OK |

| Position | Kante | $T_w$ [mm] | L [mm] | Lasten | $\sigma_{w,Ed}$ [MPa] | $\varepsilon_{Pl}$ [%] | $\sigma_{\perp}$ [MPa] | $\tau_{\perp}$ [MPa] | $\tau_{\parallel}$ [MPa] | Ut [%] | $Ut_c$ [%] | Konstruktionsregeln | Status |
|---|---|---|---|---|---|---|---|---|---|---|---|---|---|
| Verschobene Stirnplatte2a | 285-tfl 1 | ◢ 4,0 ◣ | 99 | CO11(40) | 174,6 | 0,0 | -101,4 | 45,3 | 68,4 | 40,1 | 25,3 | OK | OK |
| | | ◢ 4,0 ◣ | 99 | CO11(40) | 165,8 | 0,0 | 99,1 | 16,3 | -75,0 | 38,1 | 20,0 | OK | OK |
| Verschobene Stirnplatte2a | 285-bfl 1 | ◢ 4,0 ◣ | 99 | CO11(37) | 105,8 | 0,0 | 70,2 | -44,5 | 10,6 | 24,3 | 15,8 | OK | OK |
| | | ◢ 4,0 ◣ | 99 | CO11(42) | 65,3 | 0,0 | 22,1 | -25,2 | 25,0 | 15,0 | 10,3 | OK | OK |
| Verschobene Stirnplatte2b | 526-bfl 1 | ◢ 4,0 ◣ | 99 | CO11(37) | 56,5 | 0,0 | 34,7 | 19,8 | -16,5 | 13,0 | 10,8 | OK | OK |
| | | ◢ 4,0 ◣ | 99 | CO11(3) | 51,4 | 0,0 | -33,4 | -20,5 | 9,5 | 11,8 | 8,2 | OK | OK |
| Verschobene Stirnplatte2b | 526-tfl 1 | ◢ 4,0 ◣ | 99 | CO11(37) | 73,9 | 0,0 | -37,4 | -36,8 | -0,9 | 17,0 | 13,0 | OK | OK |
| | | ◢ 4,0 ◣ | 99 | CO11(37) | 67,5 | 0,0 | -33,0 | 33,7 | 4,2 | 15,5 | 11,5 | OK | OK |
| Verschobene Stirnplatte2b | 526-w 1 | ◢ 4,0 ◣ | 188 | CO11(37) | 76,5 | 0,0 | 38,9 | 37,2 | 7,9 | 17,6 | 10,6 | OK | OK |
| | | ◢ 4,0 ◣ | 188 | CO11(37) | 75,0 | 0,0 | 35,9 | -37,6 | -5,7 | 17,2 | 10,6 | OK | OK |
| 285-bfl 1 | STEIFF | ◢ 4,0 ◣ | 35 | CO11(37) | 24,7 | 0,0 | -5,9 | -6,1 | 12,4 | 5,7 | 5,7 | OK | OK |
| | | ◢ 4,0 ◣ | 35 | CO11(38) | 24,0 | 0,0 | -4,7 | 4,7 | -12,8 | 5,5 | 5,5 | OK | OK |
| 285-w 1 | STEIFF | ◢ 4,0 ◣ | 158 | CO11(37) | 40,2 | 0,0 | 19,3 | 19,8 | 4,6 | 9,2 | 7,6 | OK | OK |
| | | ◢ 4,0 ◣ | 158 | CO11(37) | 42,9 | 0,0 | 21,4 | -20,9 | -5,2 | 9,9 | 7,8 | OK | OK |
| 285-tfl 1 | STEIFF | ◢ 4,0 ◣ | 35 | CO11(41) | 39,8 | 0,0 | -9,6 | -12,9 | -18,2 | 9,1 | 8,9 | OK | OK |
| | | ◢ 4,0 ◣ | 35 | CO11(41) | 50,8 | 0,0 | -22,2 | 18,9 | 18,4 | 11,7 | 9,7 | OK | OK |
| Verschobene Stirnplatte2a | STEIFF | ◢ 4,0 ◣ | 181 | CO11(37) | 81,2 | 0,0 | 41,3 | 39,6 | 7,5 | 18,6 | 10,6 | OK | OK |
| | | ◢ 4,0 ◣ | 181 | CO11(37) | 79,3 | 0,0 | 37,7 | -39,4 | -8,5 | 18,2 | 10,3 | OK | OK |
| Stirnblech1 | 358 | ◢ 4,0 | 275 | CO11(40) | 426,9 | 0,1 | 290,3 | -120,7 | 134,5 | 98,0 | 61,5 | OK | OK |

**Bemessungsdaten**

| Material | $f_u$ [MPa] | $\beta_w$ [-] | $\sigma_{w,Rd}$ [MPa] | 0.9 σ [MPa] |
|---|---|---|---|---|
| S 355 | 490,0 | 0,90 | 435,6 | 352,8 |

**Erläuterung von Symbolen**

| | |
|---|---|
| $T_w$ | Nahtdicke a |
| L | Länge |
| $\sigma_{w,Ed}$ | Vergleichsspannung |
| $\varepsilon_{Pl}$ | Dehnung |
| $\sigma_{\perp}$ | Senkrechte Spannung |
| $\tau_{\perp}$ | Scherspannung senkrecht zur Schweißnahtachse |
| $\tau_{\parallel}$ | Scherspannung parallel zur Schweißnahtachse |
| Ut | Ausnutzung |
| $Ut_c$ | Schätzung der Schweißnahtkapazität |
| ◢ | Kehlnaht |
| $f_u$ | Grenzfestigkeit der Schweißnaht |
| $\beta_w$ | Korrelationsfaktor nach EN 1993-1-8 Tab. 4.1 |
| $\sigma_{w,Rd}$ | Tragfähigkeit der Schweißnaht |
| 0.9 σ | Senkrechter Spannungswiderstand - 0.9*fu / γM2 |

## Beulen

**Die Beulanalyse wurde nicht berechnet.**

## Normeinstellungen

| Position | Wert | Einheit | Bezug |
|---|---|---|---|
| Sicherheitsfaktor $\gamma_{M0}$ | 1,00 | - | EN 1993-1-1 – 6.1 |
| Sicherheitsfaktor $\gamma_{M1}$ | 1,00 | - | EN 1993-1-1 – 6.1 |
| Sicherheitsfaktor $\gamma_{M2}$ | 1,25 | - | EN 1993-1-1 – 6.1 |
| Sicherheitsfaktor $\gamma_{M3}$ | 1,25 | - | EN 1993-1-8 – Table 2.1 |
| Sicherheitsfaktor $\gamma_{C}$ | 1,50 | - | EN 1992-1-1 – 2.4.2.4 |
| Sicherheitsfaktor $\gamma_{Inst}$ | 1,20 | - | EN 1992-4 – Table 4.1 |
| Verbindungskoeffizient βj | 0,67 | - | EN 1993-1-8 – 6.2.5(7) |
| Wirksame Fläche - Einfluss der Netzgröße | 0,10 | - | |
| Reibungsbeiwert - Beton | 0,25 | - | EN 1993-1-8 |
| Reibungskoeffizient bei gleitfesten Verbindungen | 0,30 | - | EN 1993-1-8 – Table 3.7 |
| Plastische Dehnung - Grenzwert | 0,05 | - | EN 1993-1-5 |
| Konstruktionsregeln | Ja | | |
| Distance between bolts [d0] | 2,20 | - | EN 1993-1-8 – Table 3.3 |
| Distance between bolts and edge [d0] | 1,20 | - | EN 1993-1-8 – Table 3.3 |
| Nachweis der Tragfähigkeit bei Betonausbruch | Beide | | |
| Berechnetes αb für Lochleibungsnachweis anwenden. | Ja | | EN 1993-1-8 – Table 3.4 |
| Gerissener Beton | Ja | | EN 1992-4 |
| Überprüfen der lokalen Verformung | Ja | | |
| Lokale Verformung - Grenzwert | 0,03 | - | CIDECT DG 1, 3 – 1.1 |
| Geometrische Nichtlinearität (GMNA) | Ja | | Analyse mit großen Verformungen für Verbindungen mit Hohlprofilen |
| Ausgesteiftes System | Nein | | EN 1993-1-8 – 5.2.2.5 |

| | |
|---|---|
| **Projekt:** | **IdeaStatiCa-Stadion_Fazanerija_JK-6_BR - 1371** |
| **Projektnummer:** | **Detajl D14-O6** |
| **Autor:** | **mag. Igor Gorup dipl. ing.** |

## Projektdaten

| | |
|---|---|
| Projektname | IdeaStatiCa-Stadion_Fazanerija_JK-6_BR - 1371 |
| Projektnummer | Detajl D14-O6 |
| Autor | mag. Igor Gorup dipl. ing. |
| Beschreibung | |
| Datum | 18.06.2025 |
| Norm | EN |

## Material

| | |
|---|---|
| Stahl | Baustahl S 355, Baustahl S 235, S 355 |

# Projektposition 1371

## Bemessung

| | |
|---|---|
| Name | 1371 |
| Beschreibung | |
| Berechnung | Spannung, Dehnung/ Lasten im Gleichgewicht |

### Bauteile

#### Geometrie

| Name | Querschnitt | β – Rotation [°] | Y - Rotation [°] | α - Rotation [°] | Abstand ex [mm] | Abstand ey [mm] | Abstand ez [mm] |
|---|---|---|---|---|---|---|---|
| 173 | 12 - HEA200 | 0,0 | 90,0 | -180,0 | 0 | 0 | 0 |
| 157 | 871 - IPE180 | 90,0 | 0,0 | -180,0 | 0 | 0 | -30 |
| 230 | 24 - IPE240 | 0,0 | 0,0 | -180,0 | 0 | 0 | 0 |

#### Auflager und Kräfte

| Name | Auflager | Kräfte in | X [mm] |
|---|---|---|---|
| 173 / anfang | N-Vy-Vz-Mx-My-Mz | Position | 0 |
| 157 / anfang | | Position | 0 |
| 230 / anfang | | Position | 0 |
| 230 / ende | | Position | 0 |

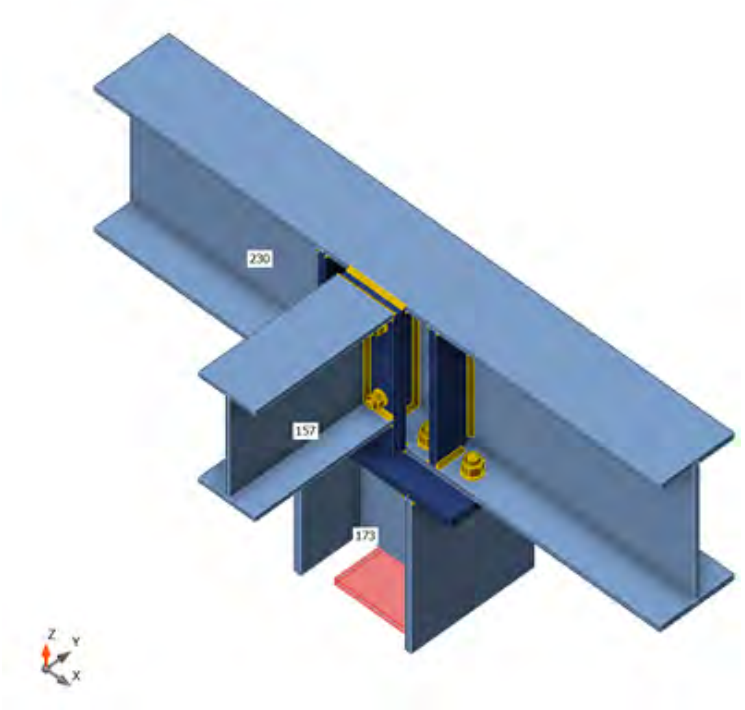


### Querschnitte

| Name | Material |
|---|---|
| 12 - HEA200 | Baustahl S 355 |
| 871 - IPE180 | S 355 |
| 24 - IPE240 | Baustahl S 355 |

## Schrauben

| Name | Durchmesser [mm] | $f_y$ [MPa] | $f_u$ [MPa] | Bruttofläche [$mm^2$] |
|---|---|---|---|---|
| M16 8.8 | 16 | 640,0 | 800,0 | 201 |
| M12 8.8 | 12 | 640,0 | 800,0 | 113 |

## Lasteinwirkungen (Kräfte im Gleichgewicht)

| Name | Bauteil | N [kN] | Vy [kN] | Vz [kN] | Mx [kNm] | My [kNm] | Mz [kNm] |
|---|---|---|---|---|---|---|---|
| CO11(20) | 173 / Anfang | 57,6 | -24,8 | -8,2 | -0,4 | -27,9 | 2,3 |
| | 157 / Anfang | -10,1 | 0,0 | 6,6 | 0,0 | -2,3 | 0,0 |
| | 230 / Anfang | 12,6 | 0,7 | 45,9 | 0,0 | 30,5 | -0,5 |
| | 230 / Ende | -2,9 | 0,3 | 5,2 | 0,0 | -2,6 | 0,1 |
| CO11(21) | 173 / Anfang | 22,0 | -4,8 | 1,2 | -0,1 | 0,5 | 0,0 |
| | 157 / Anfang | -2,4 | 0,0 | 4,2 | 0,0 | 0,0 | 0,0 |
| | 230 / Anfang | -0,1 | 0,4 | 15,2 | 0,0 | 0,9 | 0,0 |
| | 230 / Ende | -0,6 | -0,2 | 2,7 | 0,0 | -1,3 | -0,1 |
| CO11(22) | 173 / Anfang | 49,5 | -29,4 | -6,0 | -0,1 | -21,4 | 3,0 |
| | 157 / Anfang | -11,1 | 0,1 | 6,2 | 0,0 | -3,0 | -0,1 |
| | 230 / Anfang | 11,0 | 0,6 | 38,6 | 0,0 | 23,7 | -0,4 |
| | 230 / Ende | -3,4 | 0,7 | 4,7 | 0,0 | -2,3 | 0,3 |
| CO11(23) | 173 / Anfang | 18,3 | -18,8 | 0,9 | 0,0 | -0,4 | 2,0 |
| | 157 / Anfang | -6,8 | 0,1 | 3,0 | 0,0 | -2,0 | 0,0 |
| | 230 / Anfang | 2,2 | 0,2 | 13,0 | 0,0 | 1,5 | -0,2 |
| | 230 / Ende | -2,1 | 0,5 | 2,4 | 0,0 | -1,2 | 0,2 |
| CO11(24) | 173 / Anfang | 53,1 | -14,6 | -5,5 | -0,4 | -19,9 | 0,8 |
| | 157 / Anfang | -6,5 | 0,0 | 7,4 | 0,0 | -0,8 | 0,0 |
| | 230 / Anfang | 8,1 | 1,0 | 40,7 | 0,0 | 22,5 | -0,4 |
| | 230 / Ende | -1,7 | -0,1 | 5,0 | 0,1 | -2,5 | 0,0 |
| CO11(25) | 173 / Anfang | 50,2 | -20,2 | -2,2 | -0,2 | -11,6 | 1,4 |
| | 157 / Anfang | -8,4 | 0,0 | 8,1 | 0,0 | -1,4 | 0,0 |
| | 230 / Anfang | 5,9 | 0,7 | 36,9 | 0,0 | 14,3 | -0,2 |
| | 230 / Ende | -2,4 | 0,1 | 5,4 | 0,0 | -2,7 | 0,0 |
| CO9(26) | 173 / Anfang | 16,0 | -4,7 | -11,6 | 0,1 | -29,7 | 0,7 |
| | 157 / Anfang | -2,2 | 0,0 | -0,4 | 0,0 | -0,7 | 0,0 |
| | 230 / Anfang | 10,8 | 0,4 | 16,5 | 0,0 | 29,7 | -0,1 |
| | 230 / Ende | -0,6 | 0,3 | -0,1 | 0,0 | 0,0 | 0,2 |
| CO11(27) | 173 / Anfang | 40,9 | -29,8 | -1,2 | 0,0 | -8,6 | 3,0 |
| | 157 / Anfang | -11,2 | 0,1 | 6,2 | 0,0 | -3,0 | -0,1 |
| | 230 / Anfang | 6,4 | 0,5 | 30,2 | 0,0 | 10,9 | -0,3 |
| | 230 / Ende | -3,4 | 0,7 | 4,6 | 0,0 | -2,3 | 0,3 |
| CO11(28) | 173 / Anfang | 52,9 | -14,5 | -5,4 | -0,4 | -19,8 | 0,8 |
| | 157 / Anfang | -6,4 | 0,0 | 7,4 | 0,0 | -0,8 | 0,0 |
| | 230 / Anfang | 8,1 | 1,0 | 40,4 | 0,0 | 22,4 | -0,4 |
| | 230 / Ende | -1,7 | -0,1 | 5,0 | 0,1 | -2,5 | 0,0 |
| CO11(29) | 173 / Anfang | 49,7 | -29,5 | -6,0 | -0,1 | -21,5 | 3,0 |
| | 157 / Anfang | -11,2 | 0,1 | 6,2 | 0,0 | -3,0 | -0,1 |
| | 230 / Anfang | 11,0 | 0,6 | 38,9 | 0,0 | 23,8 | -0,4 |
| | 230 / Ende | -3,4 | 0,7 | 4,7 | 0,0 | -2,3 | 0,3 |
| CO11(30) | 173 / Anfang | 29,2 | -4,4 | -2,9 | -0,2 | -10,3 | -0,1 |
| | 157 / Anfang | -2,3 | 0,0 | 4,2 | 0,0 | 0,1 | 0,0 |
| | 230 / Anfang | 3,8 | 0,5 | 22,3 | 0,0 | 11,8 | -0,1 |
| | 230 / Ende | -0,5 | -0,2 | 2,8 | 0,1 | -1,4 | -0,1 |
| CO11(10) | 173 / Anfang | 46,0 | -29,3 | -2,4 | -0,1 | -12,2 | 2,9 |

| Name | Bauteil | N [kN] | Vy [kN] | Vz [kN] | Mx [kNm] | My [kNm] | Mz [kNm] |
|---|---|---|---|---|---|---|---|
| | 157 / Anfang | -11,3 | 0,1 | 6,2 | 0,0 | -3,0 | -0,1 |
| | 230 / Anfang | 7,6 | 0,5 | 34,9 | 0,0 | 14,7 | -0,3 |
| | 230 / Ende | -3,4 | 0,5 | 5,0 | 0,0 | -2,5 | 0,3 |
| CO11(12) | 173 / Anfang | 41,2 | -30,0 | -1,3 | 0,0 | -8,7 | 3,0 |
| | 157 / Anfang | -11,3 | 0,1 | 6,1 | 0,0 | -3,0 | -0,1 |
| | 230 / Anfang | 6,4 | 0,5 | 30,4 | 0,0 | 11,0 | -0,3 |
| | 230 / Ende | -3,4 | 0,7 | 4,6 | 0,0 | -2,3 | 0,3 |
| CO11(13) | 173 / Anfang | 47,7 | -29,2 | -2,3 | -0,1 | -11,9 | 2,7 |
| | 157 / Anfang | -11,3 | 0,1 | 7,3 | 0,0 | -2,7 | -0,1 |
| | 230 / Anfang | 7,4 | 0,5 | 35,3 | 0,0 | 14,5 | -0,3 |
| | 230 / Ende | -3,4 | 0,5 | 5,1 | 0,0 | -2,6 | 0,3 |
| CO11(17) | 173 / Anfang | 30,3 | -25,4 | -0,4 | 0,0 | -5,3 | 2,8 |
| | 157 / Anfang | -9,5 | 0,1 | 4,0 | 0,0 | -2,8 | -0,1 |
| | 230 / Anfang | 4,8 | 0,3 | 22,7 | 0,0 | 7,1 | -0,2 |
| | 230 / Ende | -2,9 | 0,6 | 3,6 | 0,0 | -1,8 | 0,3 |
| CO11(19) | 173 / Anfang | 54,7 | -17,8 | -5,9 | -0,4 | -21,0 | 1,1 |
| | 157 / Anfang | -7,6 | 0,0 | 8,2 | 0,0 | -1,1 | 0,0 |
| | 230 / Anfang | 9,0 | 0,8 | 41,3 | 0,0 | 23,6 | -0,4 |
| | 230 / Ende | -2,1 | 0,1 | 5,1 | 0,0 | -2,6 | 0,0 |
| CO11(1) | 173 / Anfang | 58,8 | -24,8 | -7,9 | -0,4 | -26,8 | 2,1 |
| | 157 / Anfang | -10,0 | 0,0 | 7,7 | 0,0 | -2,1 | 0,0 |
| | 230 / Anfang | 12,1 | 0,7 | 45,8 | 0,0 | 29,5 | -0,5 |
| | 230 / Ende | -2,9 | 0,3 | 5,4 | 0,0 | -2,7 | 0,1 |
| CO11(8) | 173 / Anfang | 57,1 | -19,8 | -7,0 | -0,5 | -24,6 | 1,6 |
| | 157 / Anfang | -8,4 | 0,0 | 7,0 | 0,0 | -1,6 | 0,0 |
| | 230 / Anfang | 10,6 | 0,9 | 44,8 | 0,0 | 27,3 | -0,5 |
| | 230 / Ende | -2,3 | 0,1 | 5,3 | 0,0 | -2,7 | 0,0 |

### Fehlende Lasten

| Name | X [kN] | Y [kN] | Z [kN] | Mx [kNm] | My [kNm] | Mz [kNm] |
|---|---|---|---|---|---|---|
| CO11(20) | 1,5 | 13,8 | 0,0 | 0,3 | 0,0 | 0,0 |
| CO11(21) | 0,5 | 2,2 | 0,0 | 0,1 | 0,0 | 0,0 |
| CO11(22) | 1,7 | 17,0 | 0,0 | 0,3 | 0,0 | 0,0 |
| CO11(23) | 1,0 | 11,2 | 0,0 | 0,2 | 0,0 | 0,0 |
| CO11(24) | 0,9 | 7,2 | 0,0 | 0,2 | 0,0 | 0,0 |
| CO11(25) | 1,3 | 10,9 | 0,0 | 0,3 | 0,0 | 0,0 |
| CO9(26) | -1,4 | 1,8 | 0,0 | 0,1 | 0,0 | 0,0 |
| CO11(27) | 1,8 | 17,5 | 0,0 | 0,3 | 0,0 | 0,0 |
| CO11(28) | 0,9 | 7,1 | 0,0 | 0,2 | 0,0 | 0,0 |
| CO11(29) | 1,7 | 17,1 | 0,0 | 0,3 | 0,0 | 0,0 |
| CO11(30) | 0,3 | 1,7 | 0,0 | 0,1 | 0,0 | 0,0 |
| CO11(10) | 1,9 | 17,0 | 0,0 | 0,3 | 0,0 | 0,0 |
| CO11(12) | 1,8 | 17,6 | 0,0 | 0,3 | 0,0 | 0,0 |
| CO11(13) | 1,8 | 16,9 | 0,0 | 0,3 | 0,0 | 0,0 |
| CO11(17) | 1,6 | 15,0 | 0,0 | 0,3 | 0,0 | 0,0 |
| CO11(19) | 1,0 | 9,4 | 0,0 | 0,2 | 0,0 | 0,0 |
| CO11(1) | 1,4 | 13,7 | 0,0 | 0,3 | 0,0 | 0,0 |
| CO11(8) | 1,3 | 10,4 | 0,0 | 0,3 | 0,0 | 0,0 |

## Nachweis

### Übersicht

| Name | Wert | Nachweisstatus |
|---|---|---|
| Berechnung | 100,0% | OK |
| Platten | 0,0 < 5,0% | OK |
| Schrauben | 56,4 < 100% | OK |
| Schweißnähte | 57,6 < 100% | OK |
| Beulen | Nicht berechnet | |

## Platten

| Name | Material | $t_p$ [mm] | Lasten | $\sigma_{Ed}$ [MPa] | $\varepsilon_{Pl}$ [%] | $\sigma_{c,Ed}$ [MPa] | Status |
|---|---|---|---|---|---|---|---|
| 173-bfl 1 | Baustahl S 355 | 10,0 | CO11(20) | 230,1 | 0,0 | 0,0 | OK |
| 173-tfl 1 | Baustahl S 355 | 10,0 | CO9(26) | 175,3 | 0,0 | 0,0 | OK |
| 173-w 1 | Baustahl S 355 | 6,5 | CO11(20) | 120,4 | 0,0 | 0,0 | OK |
| 157-bfl 1 | S 355 | 8,0 | CO11(13) | 30,9 | 0,0 | 0,0 | OK |
| 157-tfl 1 | S 355 | 8,0 | CO11(12) | 85,8 | 0,0 | 0,0 | OK |
| 157-w 1 | S 355 | 5,3 | CO11(12) | 85,9 | 0,0 | 0,0 | OK |
| 230-bfl 1 | Baustahl S 355 | 9,8 | CO9(26) | 116,6 | 0,0 | 0,0 | OK |
| 230-tfl 1 | Baustahl S 355 | 9,8 | CO9(26) | 316,3 | 0,0 | 55,0 | OK |
| 230-w 1 | Baustahl S 355 | 6,2 | CO9(26) | 192,5 | 0,0 | 0,0 | OK |
| Stirnblech1 | S 355 | 15,0 | CO9(26) | 216,6 | 0,0 | 49,9 | OK |
| Rippe1a | S 355 | 10,0 | CO9(26) | 145,4 | 0,0 | 0,0 | OK |
| Rippe1b | S 355 | 10,0 | CO11(20) | 165,2 | 0,0 | 0,0 | OK |
| Rippe1c | S 355 | 10,0 | CO9(26) | 112,0 | 0,0 | 0,0 | OK |
| Rippe1d | S 355 | 10,0 | CO9(26) | 91,6 | 0,0 | 0,0 | OK |
| Verschobene Stirnplatte1a | S 355 | 10,0 | CO9(26) | 239,2 | 0,0 | 16,7 | OK |
| Verschobene Stirnplatte1b | S 355 | 10,0 | CO11(12) | 159,2 | 0,0 | 29,2 | OK |
| STEIFF | S 355 | 10,0 | CO11(29) | 65,6 | 0,0 | 0,0 | OK |

### Bemessungsdaten

| Material | $f_y$ [MPa] | $\varepsilon_{lim}$ [%] |
|---|---|---|
| Baustahl S 355 | 355,0 | 5,0 |
| S 355 | 355,0 | 5,0 |

### Erläuterung von Symbolen

| | |
|---|---|
| $t_p$ | Plattendicke |
| $\sigma_{Ed}$ | Vergleichsspannung |
| $\varepsilon_{Pl}$ | Plastische Dehnung |
| $\sigma_{c,Ed}$ | Kontaktspannung |
| $f_y$ | Streckgrenze |
| $\varepsilon_{lim}$ | Grenzwert plastische Dehnung |

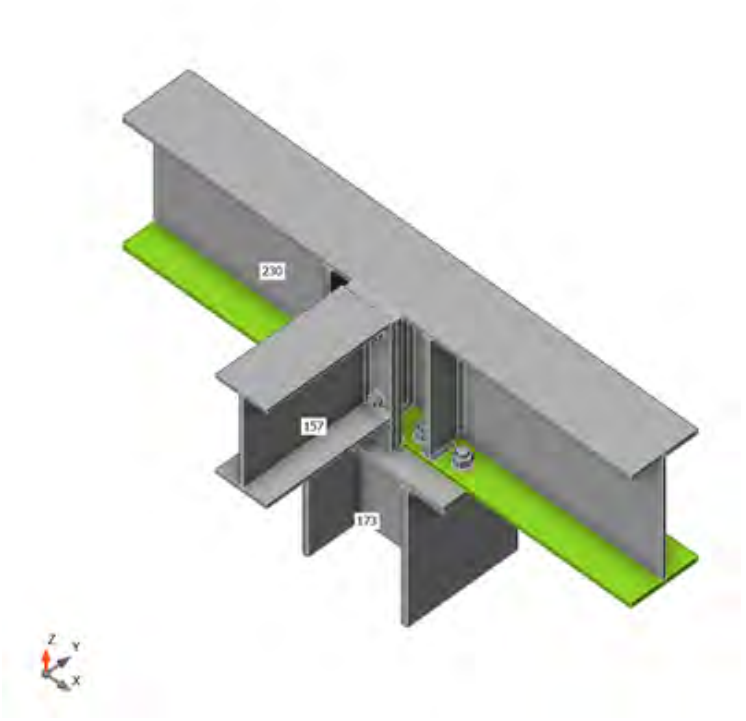


*Gesamt, CO9(26)*

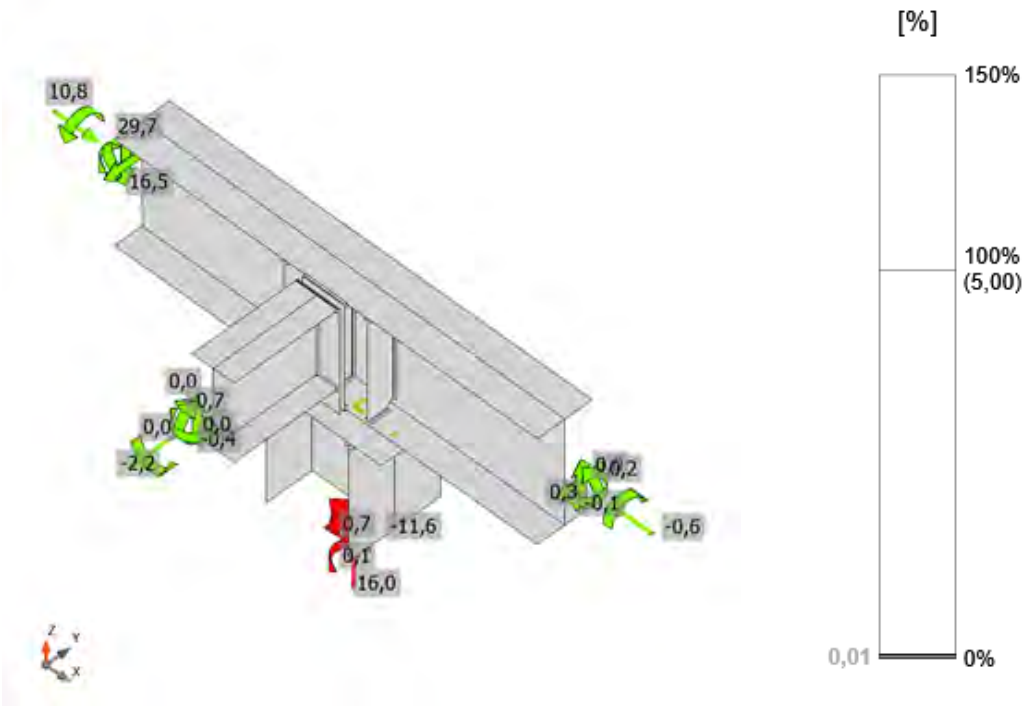


*Dehnung, CO9(26)*

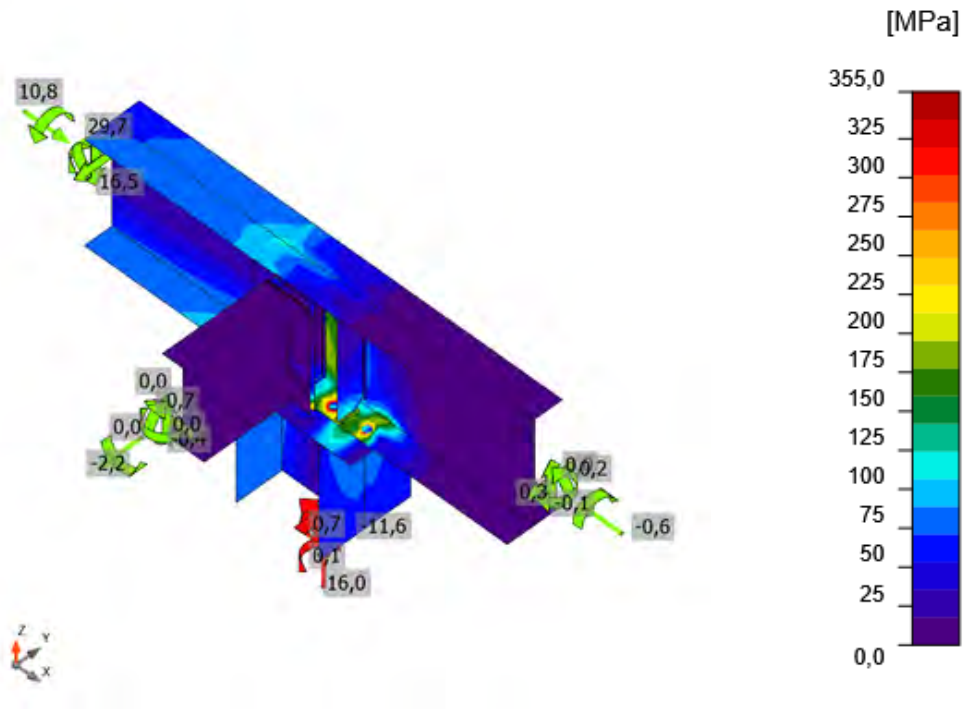


*Vergleichsspannung, CO9(26)*

## Schrauben

| Form | Position | Klasse | Lasten | $F_{t,Ed}$ [kN] | $F_{v,Ed}$ [kN] | $F_{b,Rd}$ [kN] | $Ut_t$ [%] | $Ut_s$ [%] | $Ut_{ts}$ [%] | Konstruktionsregeln | Status |
|---|---|---|---|---|---|---|---|---|---|---|---|
| 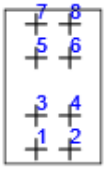 | B1 | M16 8.8 - 1 | CO11(20) | 0,5 | 4,9 | 153,7 | 0,6 | 8,1 | 8,6 | OK | OK |
| | B2 | M16 8.8 - 1 | CO9(26) | 0,5 | 3,8 | 135,9 | 0,5 | 6,3 | 6,7 | OK | OK |
| | B3 | M16 8.8 - 1 | CO11(20) | 0,2 | 2,4 | 153,7 | 0,2 | 4,0 | 4,1 | OK | OK |
| | B4 | M16 8.8 - 1 | CO11(12) | 0,0 | 1,5 | 65,8 | 0,0 | 2,6 | 2,6 | OK | OK |
| | B5 | M16 8.8 - 1 | CO9(26) | 51,0 | 0,4 | 153,7 | 56,4 | 0,7 | 40,9 | OK | OK |
| | B6 | M16 8.8 - 1 | CO9(26) | 40,7 | 1,1 | 71,1 | 45,0 | 1,8 | 33,9 | OK | OK |
| | B7 | M16 8.8 - 1 | CO9(26) | 36,9 | 1,1 | 66,8 | 40,8 | 1,8 | 31,0 | OK | OK |
| | B8 | M16 8.8 - 1 | CO9(26) | 34,6 | 1,5 | 62,5 | 38,3 | 2,5 | 29,9 | OK | OK |
| 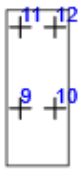 | B9 | M12 8.8 - 2 | CO11(12) | 16,3 | 1,4 | 92,5 | 33,6 | 4,3 | 28,4 | OK | OK |
| | B10 | M12 8.8 - 2 | CO11(12) | 17,8 | 1,5 | 101,9 | 36,7 | 4,7 | 30,8 | OK | OK |
| | B11 | M12 8.8 - 2 | CO11(13) | 1,2 | 1,9 | 75,7 | 2,5 | 6,0 | 7,8 | OK | OK |
| | B12 | M12 8.8 - 2 | CO11(13) | 1,3 | 1,9 | 75,7 | 2,6 | 5,9 | 7,8 | OK | OK |

**Bemessungsdaten**

| Klasse | $F_{t,Rd}$ [kN] | $B_{p,Rd}$ [kN] | $F_{v,Rd}$ [kN] |
|---|---|---|---|
| M16 8.8 - 1 | 90,4 | 183,7 | 60,3 |
| M12 8.8 - 2 | 48,6 | 140,5 | 32,4 |

**Erläuterung von Symbolen**

| | |
|---|---|
| $F_{t,Ed}$ | Zugkraft |
| $F_{v,Ed}$ | Resultierende der Schraubenscherkräfte Vy und Vz in Scherebenen |
| $F_{b,Rd}$ | Lochleibungstragfähigkeit der Platte nach EN 1993-1-8 Tab. 3.4 |
| $Ut_t$ | Ausnutzung unter Zug |
| $Ut_s$ | Ausnutzung unter Schub |
| $Ut_{ts}$ | Interaktion von Zug und Schub EN_1993-1-8 Tabelle 3.4 |
| $F_{t,Rd}$ | Zugtragfähigkeit der Schraube nach EN 1993-1-8 Tabelle 3.4 |
| $B_{p,Rd}$ | Durchstanztragfähigkeit nach EN 1993-1-8 Tabelle 3.4 |
| $F_{v,Rd}$ | Schertragfähigkeit der Schraube nach EN 1993-1-8 Tabelle 3.4 |

## Schweißnähte

| Position | Kante | $T_w$ [mm] | L [mm] | Lasten | $\sigma_{w,Ed}$ [MPa] | $\varepsilon_{Pl}$ [%] | $\sigma_{\perp}$ [MPa] | $\tau_{\perp}$ [MPa] | $\tau_{\parallel}$ [MPa] | Ut [%] | $Ut_c$ [%] | Konstruktionsregeln | Status |
|---|---|---|---|---|---|---|---|---|---|---|---|---|---|
| Stirnblech1 | 173-bfl 1 | ◢ 6,0 ◣ | 199 | CO11(20) | 195,9 | 0,0 | -57,4 | -100,9 | -38,7 | 45,0 | 25,7 | OK | OK |
| | | ◢ 6,0 ◣ | 199 | CO11(20) | 226,5 | 0,0 | -143,2 | 101,3 | 1,7 | 52,0 | 29,5 | OK | OK |
| Stirnblech1 | 173-tfl 1 | ◢ 6,0 ◣ | 199 | CO9(26) | 165,4 | 0,0 | 115,5 | 64,4 | 22,7 | 38,0 | 22,0 | OK | OK |
| | | ◢ 6,0 ◣ | 199 | CO9(26) | 118,7 | 0,0 | 48,1 | -61,3 | 13,0 | 27,2 | 16,3 | OK | OK |
| Stirnblech1 | 173-w 1 | ◢ 6,0 ◣ | 179 | CO9(26) | 97,8 | 0,0 | 21,6 | 17,8 | -52,1 | 22,4 | 12,6 | OK | OK |
| | | ◢ 6,0 ◣ | 179 | CO9(26) | 85,8 | 0,0 | 16,9 | -20,8 | 43,9 | 19,7 | 12,0 | OK | OK |
| 230-bfl 1 | Rippe1a | ◢ 4,0 ◣ | 42 | CO9(26) | 60,5 | 0,0 | -28,7 | -26,6 | -15,4 | 13,9 | 11,2 | OK | OK |
| | | ◢ 4,0 ◣ | 42 | CO9(26) | 51,4 | 0,0 | -4,4 | 6,5 | 28,9 | 11,8 | 8,4 | OK | OK |
| 230-w 1 | Rippe1a | ◢ 4,0 ◣ | 190 | CO9(26) | 69,6 | 0,0 | -4,0 | -12,7 | 38,0 | 16,0 | 10,2 | OK | OK |
| | | ◢ 4,0 ◣ | 190 | CO11(20) | 77,5 | 0,0 | -24,4 | 18,2 | -38,4 | 17,8 | 10,0 | OK | OK |
| 230-tfl 1 | Rippe1a | ◢ 4,0 ◣ | 42 | CO11(20) | 168,7 | 0,0 | -82,3 | -83,7 | -15,0 | 38,7 | 32,1 | OK | OK |
| | | ◢ 4,0 ◣ | 42 | CO9(26) | 215,8 | 0,0 | -107,5 | 105,0 | 25,5 | 49,5 | 42,1 | OK | OK |
| 230-bfl 1 | Rippe1b | ◢ 4,0 ◣ | 42 | CO11(20) | 51,2 | 0,0 | -3,4 | -9,0 | -28,1 | 11,7 | 8,8 | OK | OK |
| | | ◢ 4,0 ◣ | 42 | CO11(20) | 67,1 | 0,0 | -29,5 | 23,9 | 25,3 | 15,4 | 10,8 | OK | OK |
| 230-w 1 | Rippe1b | ◢ 4,0 ◣ | 190 | CO11(20) | 81,1 | 0,0 | -22,4 | -19,5 | 40,5 | 18,6 | 10,4 | OK | OK |
| | | ◢ 4,0 ◣ | 190 | CO11(20) | 93,2 | 0,0 | -9,6 | 12,5 | -52,0 | 21,4 | 13,0 | OK | OK |
| 230-tfl 1 | Rippe1b | ◢ 4,0 ◣ | 42 | CO11(20) | 250,9 | 0,0 | -126,0 | -124,3 | -15,7 | 57,6 | 49,3 | OK | OK |
| | | ◢ 4,0 ◣ | 42 | CO11(20) | 200,6 | 0,0 | -86,0 | 95,5 | 42,8 | 46,0 | 40,4 | OK | OK |

| Position | Kante | $T_w$ [mm] | L [mm] | Lasten | $\sigma_{w,Ed}$ [MPa] | $\varepsilon_{Pl}$ [%] | $\sigma_{\perp}$ [MPa] | $\tau_{\perp}$ [MPa] | $\tau_{\parallel}$ [MPa] | Ut [%] | $Ut_c$ [%] | Konstruktionsregeln | Status |
|---|---|---|---|---|---|---|---|---|---|---|---|---|---|
| 230-bfl 1 | Rippe1c | ◢ 4,0 ◣ | 42 | CO9(26) | 34,8 | 0,0 | -4,9 | -1,3 | 19,9 | 8,0 | 7,2 | OK | OK |
| | | ◢ 4,0 ◣ | 42 | CO9(26) | 39,9 | 0,0 | 21,0 | -17,5 | -8,9 | 9,2 | 8,7 | OK | OK |
| 230-w 1 | Rippe1c | ◢ 4,0 ◣ | 190 | CO9(26) | 54,1 | 0,0 | 5,1 | 6,8 | -30,4 | 12,4 | 10,9 | OK | OK |
| | | ◢ 4,0 ◣ | 190 | CO9(26) | 55,0 | 0,0 | 13,3 | -11,7 | 28,5 | 12,6 | 11,0 | OK | OK |
| 230-tfl 1 | Rippe1c | ◢ 4,0 ◣ | 42 | CO9(26) | 186,4 | 0,0 | 68,3 | 85,4 | 52,2 | 42,8 | 35,6 | OK | OK |
| | | ◢ 4,0 ◣ | 42 | CO9(26) | 169,9 | 0,0 | 93,1 | -75,9 | -31,3 | 39,0 | 31,1 | OK | OK |
| 230-bfl 1 | Rippe1d | ◢ 4,0 ◣ | 42 | CO9(26) | 36,9 | 0,0 | 22,6 | 14,7 | 8,2 | 8,5 | 7,4 | OK | OK |
| | | ◢ 4,0 ◣ | 42 | CO9(26) | 21,5 | 0,0 | -8,2 | 0,3 | -11,4 | 4,9 | 4,9 | OK | OK |
| 230-w 1 | Rippe1d | ◢ 4,0 ◣ | 190 | CO9(26) | 53,8 | 0,0 | 10,6 | 12,6 | -27,7 | 12,3 | 10,9 | OK | OK |
| | | ◢ 4,0 ◣ | 190 | CO9(26) | 45,2 | 0,0 | 16,7 | -11,0 | 21,6 | 10,4 | 9,2 | OK | OK |
| 230-tfl 1 | Rippe1d | ◢ 4,0 ◣ | 42 | CO9(26) | 160,0 | 0,0 | 71,6 | 75,2 | 34,1 | 36,7 | 30,7 | OK | OK |
| | | ◢ 4,0 ◣ | 42 | CO9(26) | 150,0 | 0,0 | 74,1 | -70,4 | -26,8 | 34,4 | 29,5 | OK | OK |
| Verschobene Stirnplatte1a | 230-tfl 1 | ◢ 4,0 ◣ | 90 | CO9(26) | 177,5 | 0,0 | 15,1 | 46,8 | 90,8 | 40,8 | 25,3 | OK | OK |
| | | ◢ 4,0 ◣ | 91 | CO9(26) | 185,3 | 0,0 | 76,7 | 14,6 | 96,2 | 42,5 | 27,1 | OK | OK |
| Verschobene Stirnplatte1a | 230-bfl 1 | ◢ 4,0 ◣ | 91 | CO9(26) | 107,5 | 0,0 | 23,0 | 6,7 | 60,2 | 24,7 | 13,7 | OK | OK |
| | | ◢ 4,0 ◣ | 90 | CO11(29) | 63,4 | 0,0 | -33,8 | -30,9 | 1,6 | 14,6 | 11,4 | OK | OK |
| Verschobene Stirnplatte1b | 157-bfl 1 | ◢ 4,0 ◣ | 90 | CO11(12) | 26,4 | 0,0 | -5,8 | -14,7 | 2,3 | 6,1 | 6,1 | OK | OK |
| | | ◢ 4,0 ◣ | 91 | CO11(12) | 53,9 | 0,0 | -33,3 | -22,8 | -9,0 | 12,4 | 10,7 | OK | OK |
| Verschobene Stirnplatte1b | 157-tfl 1 | ◢ 4,0 ◣ | 90 | CO11(12) | 60,6 | 0,0 | -24,9 | -28,0 | -15,3 | 13,9 | 9,2 | OK | OK |

| Position | Kante | $T_w$ [mm] | L [mm] | Lasten | $\sigma_{w,Ed}$ [MPa] | $\varepsilon_{Pl}$ [%] | $\sigma_{\perp}$ [MPa] | $\tau_{\perp}$ [MPa] | $\tau_{\parallel}$ [MPa] | Ut [%] | $Ut_c$ [%] | Konstruktionsregeln | Status |
|---|---|---|---|---|---|---|---|---|---|---|---|---|---|
| | | ◢ 4,0 ◣ | 90 | CO11(12) | 72,3 | 0,0 | 34,2 | -25,8 | -26,2 | 16,6 | 12,9 | OK | OK |
| Verschobene Stirnplatte1b | 157-w 1 | ◢ 4,0 ◣ | 170 | CO11(12) | 89,9 | 0,0 | 42,9 | 45,4 | 4,4 | 20,6 | 11,3 | OK | OK |
| | | ◢ 4,0 ◣ | 170 | CO11(12) | 90,3 | 0,0 | 47,0 | -44,5 | -1,7 | 20,7 | 11,4 | OK | OK |
| 230-bfl 1 | STEIFF | ◢ 4,0 ◣ | 57 | CO9(26) | 37,6 | 0,0 | -36,2 | -1,2 | -5,8 | 10,2 | 7,7 | OK | OK |
| | | ◢ 4,0 ◣ | 57 | CO11(29) | 51,4 | 0,0 | 0,7 | -2,2 | -29,6 | 11,8 | 9,4 | OK | OK |
| 230-w 1 | STEIFF | ◢ 4,0 ◣ | 220 | CO11(20) | 58,2 | 0,0 | 1,1 | 17,4 | 28,8 | 13,4 | 10,2 | OK | OK |
| | | ◢ 4,0 ◣ | 219 | CO11(29) | 46,8 | 0,0 | -1,8 | 0,6 | 27,0 | 10,7 | 8,8 | OK | OK |
| 230-tfl 1 | STEIFF | ◢ 4,0 ◣ | 57 | CO11(20) | 67,4 | 0,0 | 44,8 | 10,9 | -26,9 | 15,5 | 10,9 | OK | OK |
| | | ◢ 4,0 ◣ | 57 | CO11(29) | 63,6 | 0,0 | -19,9 | -5,9 | 34,4 | 14,6 | 8,5 | OK | OK |
| Verschobene Stirnplatte1a | STEIFF | ◢ 4,0 ◣ | 219 | CO11(12) | 132,0 | 0,0 | 61,0 | 64,7 | 19,6 | 30,3 | 17,3 | OK | OK |
| | | ◢ 4,0 ◣ | 219 | CO11(29) | 153,5 | 0,0 | 74,6 | -71,8 | -29,0 | 35,2 | 19,9 | OK | OK |

**Bemessungsdaten**

| Material | $f_u$ [MPa] | $\beta_w$ [-] | $\sigma_{w,Rd}$ [MPa] | 0.9 σ [MPa] |
|---|---|---|---|---|
| S 355 | 490,0 | 0,90 | 435,6 | 352,8 |

**Erläuterung von Symbolen**

| | |
|---|---|
| $T_w$ | Nahtdicke a |
| L | Länge |
| $\sigma_{w,Ed}$ | Vergleichsspannung |
| $\varepsilon_{Pl}$ | Dehnung |
| $\sigma_{\perp}$ | Senkrechte Spannung |
| $\tau_{\perp}$ | Scherspannung senkrecht zur Schweißnahtachse |
| $\tau_{\parallel}$ | Scherspannung parallel zur Schweißnahtachse |
| Ut | Ausnutzung |
| $Ut_c$ | Schätzung der Schweißnahtkapazität |
| ◢ | Kehlnaht |
| $f_u$ | Grenzfestigkeit der Schweißnaht |
| $\beta_w$ | Korrelationsfaktor nach EN 1993-1-8 Tab. 4.1 |
| $\sigma_{w,Rd}$ | Tragfähigkeit der Schweißnaht |
| 0.9 σ | Senkrechter Spannungswiderstand - 0.9*fu / γM2 |

### Beulen

**Die Beulanalyse wurde nicht berechnet.**

## Normeinstellungen

| Position | Wert | Einheit | Bezug |
|---|---|---|---|
| Sicherheitsfaktor $\gamma_{M0}$ | 1,00 | - | EN 1993-1-1 – 6.1 |
| Sicherheitsfaktor $\gamma_{M1}$ | 1,00 | - | EN 1993-1-1 – 6.1 |
| Sicherheitsfaktor $\gamma_{M2}$ | 1,25 | - | EN 1993-1-1 – 6.1 |
| Sicherheitsfaktor $\gamma_{M3}$ | 1,25 | - | EN 1993-1-8 – Table 2.1 |
| Sicherheitsfaktor $\gamma_{C}$ | 1,50 | - | EN 1992-1-1 – 2.4.2.4 |
| Sicherheitsfaktor $\gamma_{Inst}$ | 1,20 | - | EN 1992-4 – Table 4.1 |
| Verbindungskoeffizient βj | 0,67 | - | EN 1993-1-8 – 6.2.5(7) |
| Wirksame Fläche - Einfluss der Netzgröße | 0,10 | - | |
| Reibungsbeiwert - Beton | 0,25 | - | EN 1993-1-8 |
| Reibungskoeffizient bei gleitfesten Verbindungen | 0,30 | - | EN 1993-1-8 – Table 3.7 |
| Plastische Dehnung - Grenzwert | 0,05 | - | EN 1993-1-5 |
| Konstruktionsregeln | Ja | | |
| Distance between bolts [d0] | 2,20 | - | EN 1993-1-8 – Table 3.3 |
| Distance between bolts and edge [d0] | 1,20 | - | EN 1993-1-8 – Table 3.3 |
| Nachweis der Tragfähigkeit bei Betonausbruch | Beide | | |
| Berechnetes αb für Lochleibungsnachweis anwenden. | Ja | | EN 1993-1-8 – Table 3.4 |
| Gerissener Beton | Ja | | EN 1992-4 |
| Überprüfen der lokalen Verformung | Ja | | |
| Lokale Verformung - Grenzwert | 0,03 | - | CIDECT DG 1, 3 – 1.1 |
| Geometrische Nichtlinearität (GMNA) | Ja | | Analyse mit großen Verformungen für Verbindungen mit Hohlprofilen |
| Ausgesteiftes System | Nein | | EN 1993-1-8 – 5.2.2.5 |

# DETAJLI ETAŽNE KONSTRUKCIJE

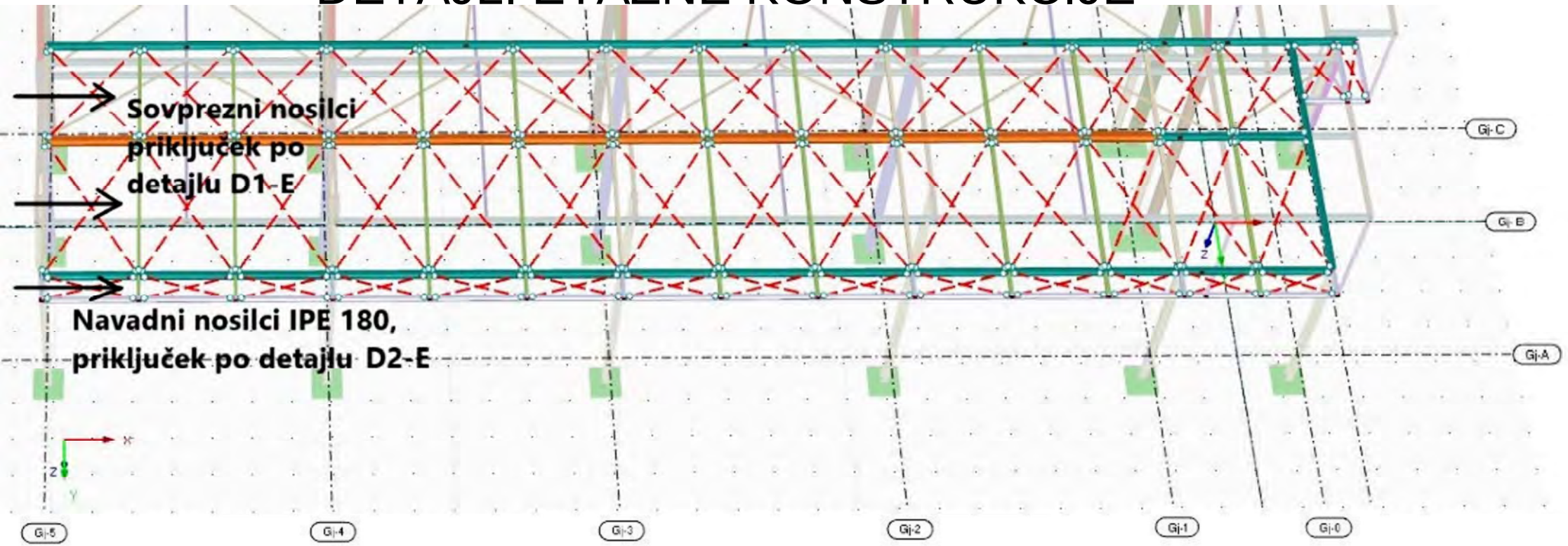

## Projektdaten

| | |
|---|---|
| Projektname | IdeaStatiCa-Stadion_Fazanerija_JK-6_BR - 1341 |
| Projektnummer | Detail D1-E |
| Autor | mag. Igor Gorup dipl. ing. |
| Beschreibung | |
| Datum | 18.06.2025 |
| Norm | EN |

## Material

| | |
|---|---|
| Stahl | Baustahl S 355, Baustahl S 235, S 355 |

# Projektposition 1341

## Bemessung

| | |
|---|---|
| Name | 1341 |
| Beschreibung | |
| Berechnung | Spannung, Dehnung/ Lasten im Gleichgewicht |

### Bauteile

#### Geometrie

| Name | Querschnitt | β – Rotation [°] | Y - Rotation [°] | α - Rotation [°] | Abstand ex [mm] | Abstand ey [mm] | Abstand ez [mm] |
|---|---|---|---|---|---|---|---|
| 315 | 272 - IPE300 | 0,0 | 0,0 | -180,0 | 0 | 0 | 0 |
| 317 | 606 - IPE180 | -90,0 | 0,0 | -180,0 | 0 | 0 | -60 |
| 322 | 606 - IPE180 | -90,0 | 0,0 | -180,0 | 0 | 0 | -60 |

#### Auflager und Kräfte

| Name | Auflager | Kräfte in | X [mm] |
|---|---|---|---|
| 315 / anfang | N-Vy-Vz-Mx-My-Mz | Position | 0 |
| 315 / ende | | Position | 0 |
| 317 / ende | Mx-My-Mz | Schrauben | 74 |
| 322 / anfang | Mx-My-Mz | Schrauben | 74 |

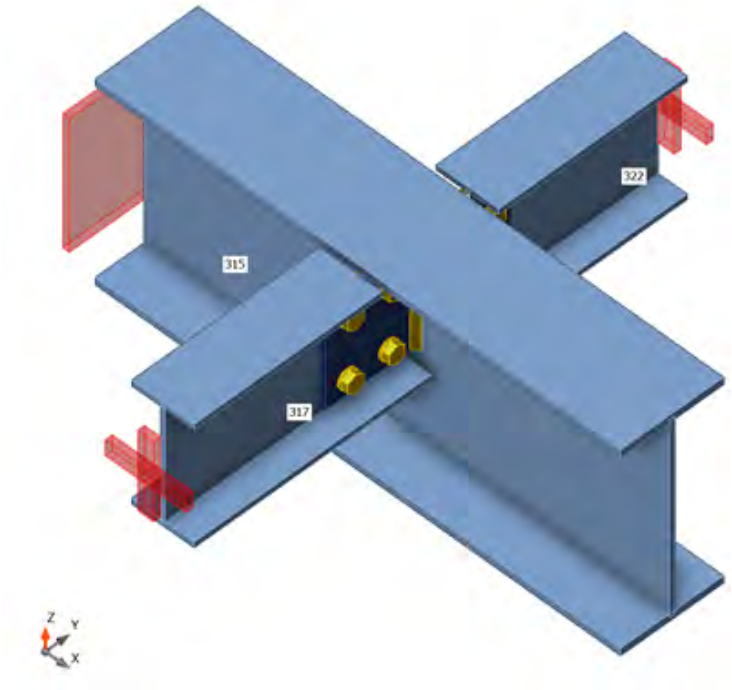


### Querschnitte

| Name | Material |
|---|---|
| 272 - IPE300 | Baustahl S 355 |
| 606 - IPE180 | S 355 |

## Schrauben

| Name | Durchmesser [mm] | $f_y$ [MPa] | $f_u$ [MPa] | Bruttofläche [$mm^2$] |
|---|---|---|---|---|
| M16 8.8 | 16 | 640,0 | 800,0 | 201 |

## Lasteinwirkungen (Kräfte im Gleichgewicht)

| Name | Bauteil | N [kN] | Vy [kN] | Vz [kN] | Mx [kNm] | My [kNm] | Mz [kNm] |
|---|---|---|---|---|---|---|---|
| CO11(27) | 315 / Anfang | -19,5 | -2,5 | 13,2 | 0,0 | -68,0 | 0,4 |
| | 315 / Ende | 20,5 | -1,7 | -96,6 | 0,0 | 68,0 | -0,4 |
| | 317 / Ende | -0,7 | 0,3 | 48,2 | 0,0 | 0,0 | 0,0 |
| | 322 / Anfang | 8,1 | 0,2 | 35,2 | 0,0 | 0,0 | 0,0 |
| CO11(28) | 315 / Anfang | -16,6 | -1,5 | 15,0 | 0,0 | -76,1 | 0,1 |
| | 315 / Ende | 16,8 | -0,9 | -108,9 | 0,0 | 76,1 | -0,1 |
| | 317 / Ende | -0,1 | 0,4 | 54,4 | 0,0 | 0,0 | 0,0 |
| | 322 / Anfang | 6,5 | 0,3 | 39,6 | 0,0 | 0,0 | 0,0 |
| CO9(29) | 315 / Anfang | -5,4 | 0,0 | 10,2 | 0,0 | 9,5 | 0,0 |
| | 315 / Ende | 9,2 | 0,0 | -10,2 | 0,0 | -9,5 | 0,0 |
| | 317 / Ende | -0,7 | 0,0 | 0,0 | 0,0 | 0,0 | 0,0 |
| | 322 / Anfang | 3,2 | 0,0 | 0,0 | 0,0 | 0,0 | 0,0 |
| CO11(30) | 315 / Anfang | -11,4 | 1,5 | 10,0 | 0,0 | -81,5 | -0,2 |
| | 315 / Ende | 6,0 | 1,0 | -103,9 | 0,0 | 81,5 | 0,2 |
| | 317 / Ende | 0,6 | 0,4 | 54,3 | 0,0 | 0,0 | 0,0 |
| | 322 / Anfang | 3,2 | 0,3 | 39,6 | 0,0 | 0,0 | 0,0 |
| CO11(31) | 315 / Anfang | -12,7 | -1,5 | 7,9 | 0,0 | -68,1 | 0,3 |
| | 315 / Ende | 12,6 | -1,2 | -86,6 | 0,0 | 68,1 | -0,3 |
| | 317 / Ende | -0,1 | 0,3 | 45,6 | 0,0 | 0,0 | 0,0 |
| | 322 / Anfang | 5,1 | 0,2 | 33,2 | 0,0 | 0,0 | 0,0 |
| CO11(32) | 315 / Anfang | -13,4 | 2,5 | 12,5 | 0,0 | -69,5 | -0,5 |
| | 315 / Ende | 5,5 | 1,9 | -95,8 | 0,0 | 69,5 | 0,5 |
| | 317 / Ende | 0,3 | 0,3 | 48,2 | 0,0 | 0,0 | 0,0 |
| | 322 / Anfang | 3,6 | 0,2 | 35,1 | 0,0 | 0,0 | 0,0 |
| CO11(33) | 315 / Anfang | -12,7 | -1,5 | 8,7 | 0,0 | -34,5 | 0,3 |
| | 315 / Ende | 13,4 | -1,2 | -52,1 | 0,0 | 34,5 | -0,3 |
| | 317 / Ende | -0,9 | 0,1 | 25,1 | 0,0 | 0,0 | 0,0 |
| | 322 / Anfang | 5,4 | 0,1 | 18,3 | 0,0 | 0,0 | 0,0 |
| CO11(34) | 315 / Anfang | -19,5 | -2,5 | 13,2 | 0,0 | -68,0 | 0,4 |
| | 315 / Ende | 20,5 | -1,7 | -96,5 | 0,0 | 68,0 | -0,4 |
| | 317 / Ende | -0,7 | 0,3 | 48,2 | 0,0 | 0,0 | 0,0 |
| | 322 / Anfang | 8,1 | 0,2 | 35,2 | 0,0 | 0,0 | 0,0 |
| CO11(35) | 315 / Anfang | -10,4 | 0,0 | 15,7 | 0,0 | -76,0 | -0,1 |
| | 315 / Ende | 9,0 | 0,1 | -109,6 | 0,0 | 76,0 | 0,1 |
| | 317 / Ende | 0,5 | 0,4 | 54,3 | 0,0 | 0,0 | 0,0 |
| | 322 / Anfang | 3,5 | 0,3 | 39,6 | 0,0 | 0,0 | 0,0 |
| CO11(36) | 315 / Anfang | -16,6 | -1,5 | 15,0 | 0,0 | -76,2 | 0,1 |
| | 315 / Ende | 16,7 | -0,9 | -108,9 | 0,0 | 76,2 | -0,1 |
| | 317 / Ende | -0,1 | 0,4 | 54,4 | 0,0 | 0,0 | 0,0 |
| | 322 / Anfang | 6,5 | 0,3 | 39,6 | 0,0 | 0,0 | 0,0 |
| CO11(37) | 315 / Anfang | -14,5 | -1,5 | 10,2 | 0,0 | -80,9 | 0,3 |
| | 315 / Ende | 14,4 | -1,1 | -104,1 | 0,0 | 80,9 | -0,3 |
| | 317 / Ende | 0,1 | 0,4 | 54,3 | 0,0 | 0,0 | 0,0 |
| | 322 / Anfang | 5,7 | 0,3 | 39,6 | 0,0 | 0,0 | 0,0 |
| CO11(14) | 315 / Anfang | -15,7 | -2,5 | 8,0 | 0,0 | -35,3 | 0,7 |
| | 315 / Ende | 16,8 | -2,1 | -51,4 | 0,0 | 35,3 | -0,7 |

| Name | Bauteil | N [kN] | Vy [kN] | Vz [kN] | Mx [kNm] | My [kNm] | Mz [kNm] |
|---|---|---|---|---|---|---|---|
| | 317 / Ende | -1,2 | 0,1 | 25,1 | 0,0 | 0,0 | 0,0 |
| | 322 / Anfang | 6,9 | 0,1 | 18,3 | 0,0 | 0,0 | 0,0 |
| CO11(15) | 315 / Anfang | -9,1 | 0,0 | 11,1 | 0,0 | -80,3 | 0,0 |
| | 315 / Ende | 7,7 | 0,0 | -105,0 | 0,0 | 80,3 | 0,0 |
| | 317 / Ende | 0,6 | 0,4 | 54,3 | 0,0 | 0,0 | 0,0 |
| | 322 / Anfang | 3,0 | 0,3 | 39,6 | 0,0 | 0,0 | 0,0 |
| CO11(19) | 315 / Anfang | -15,1 | -1,5 | 10,1 | 0,0 | -80,8 | 0,2 |
| | 315 / Ende | 15,3 | -1,0 | -104,0 | 0,0 | 80,8 | -0,2 |
| | 317 / Ende | 0,1 | 0,4 | 54,3 | 0,0 | 0,0 | 0,0 |
| | 322 / Anfang | 6,0 | 0,3 | 39,6 | 0,0 | 0,0 | 0,0 |
| CO11(20) | 315 / Anfang | -15,5 | -2,4 | 6,1 | 0,0 | -59,9 | 0,6 |
| | 315 / Ende | 16,3 | -2,1 | -74,2 | 0,0 | 59,9 | -0,6 |
| | 317 / Ende | -0,7 | 0,2 | 39,4 | 0,0 | 0,0 | 0,0 |
| | 322 / Anfang | 6,6 | 0,1 | 28,7 | 0,0 | 0,0 | 0,0 |
| CO11(21) | 315 / Anfang | -13,3 | 1,5 | 14,6 | 0,0 | -76,9 | -0,4 |
| | 315 / Ende | 8,2 | 1,2 | -108,5 | 0,0 | 76,9 | 0,4 |
| | 317 / Ende | 0,4 | 0,4 | 54,3 | 0,0 | 0,0 | 0,0 |
| | 322 / Anfang | 4,0 | 0,3 | 39,6 | 0,0 | 0,0 | 0,0 |
| CO11(23) | 315 / Anfang | -11,1 | 0,0 | 15,9 | 0,0 | -75,5 | -0,1 |
| | 315 / Ende | 10,0 | 0,2 | -109,7 | 0,0 | 75,5 | 0,1 |
| | 317 / Ende | 0,4 | 0,4 | 54,3 | 0,0 | 0,0 | 0,0 |
| | 322 / Anfang | 3,8 | 0,3 | 39,6 | 0,0 | 0,0 | 0,0 |
| CO11(25) | 315 / Anfang | -13,1 | 1,5 | 13,6 | 0,0 | -67,9 | -0,5 |
| | 315 / Ende | 8,5 | 1,4 | -96,9 | 0,0 | 67,9 | 0,5 |
| | 317 / Ende | 0,1 | 0,3 | 48,2 | 0,0 | 0,0 | 0,0 |
| | 322 / Anfang | 4,1 | 0,2 | 35,1 | 0,0 | 0,0 | 0,0 |
| CO11(26) | 315 / Anfang | -12,0 | 1,5 | 9,9 | 0,0 | -81,3 | -0,3 |
| | 315 / Ende | 6,9 | 1,1 | -103,8 | 0,0 | 81,3 | 0,3 |
| | 317 / Ende | 0,6 | 0,4 | 54,3 | 0,0 | 0,0 | 0,0 |
| | 322 / Anfang | 3,5 | 0,3 | 39,6 | 0,0 | 0,0 | 0,0 |
| CO11(2) | 315 / Anfang | -9,1 | 2,4 | 2,8 | 0,0 | -40,6 | -0,7 |
| | 315 / Ende | 2,1 | 2,2 | -46,3 | 0,0 | 40,6 | 0,7 |
| | 317 / Ende | -0,2 | 0,1 | 25,1 | 0,0 | 0,0 | 0,0 |
| | 322 / Anfang | 2,3 | 0,1 | 18,3 | 0,0 | 0,0 | 0,0 |
| CO11(3) | 315 / Anfang | -14,4 | -2,4 | 3,1 | 0,0 | -39,9 | 0,7 |
| | 315 / Ende | 15,6 | -2,2 | -46,6 | 0,0 | 39,9 | -0,7 |
| | 317 / Ende | -1,0 | 0,1 | 25,1 | 0,0 | 0,0 | 0,0 |
| | 322 / Anfang | 6,4 | 0,1 | 18,3 | 0,0 | 0,0 | 0,0 |
| CO11(5) | 315 / Anfang | -17,3 | -2,4 | 8,4 | 0,0 | -72,8 | 0,5 |
| | 315 / Ende | 18,1 | -2,0 | -91,7 | 0,0 | 72,8 | -0,5 |
| | 317 / Ende | -0,5 | 0,3 | 48,2 | 0,0 | 0,0 | 0,0 |
| | 322 / Anfang | 7,2 | 0,2 | 35,1 | 0,0 | 0,0 | 0,0 |
| CO11(8) | 315 / Anfang | -13,6 | -2,4 | 3,3 | 0,0 | -39,9 | 0,7 |
| | 315 / Ende | 14,7 | -2,2 | -46,7 | 0,0 | 39,9 | -0,7 |
| | 317 / Ende | -1,0 | 0,1 | 25,1 | 0,0 | 0,0 | 0,0 |
| | 322 / Anfang | 6,0 | 0,1 | 18,3 | 0,0 | 0,0 | 0,0 |
| CO11(9) | 315 / Anfang | -10,2 | 2,4 | 7,3 | 0,0 | -36,3 | -0,8 |
| | 315 / Ende | 3,3 | 2,2 | -50,8 | 0,0 | 36,3 | 0,8 |

| Name | Bauteil | N [kN] | Vy [kN] | Vz [kN] | Mx [kNm] | My [kNm] | Mz [kNm] |
|---|---|---|---|---|---|---|---|
| | 317 / Ende | -0,3 | 0,1 | 25,1 | 0,0 | 0,0 | 0,0 |
| | 322 / Anfang | 2,8 | 0,1 | 18,3 | 0,0 | 0,0 | 0,0 |

### Fehlende Lasten

| Name | X [kN] | Y [kN] | Z [kN] | Mx [kNm] | My [kNm] | Mz [kNm] |
|---|---|---|---|---|---|---|
| CO11(27) | 0,5 | -3,2 | -0,1 | 1,4 | 0,0 | 0,0 |
| CO11(28) | -0,5 | -4,0 | -0,1 | 1,5 | 0,0 | 0,0 |
| CO9(29) | 3,8 | -2,5 | 0,0 | 0,2 | 0,0 | 0,0 |
| CO11(30) | -6,0 | -6,3 | 0,0 | 1,3 | 0,0 | 0,0 |
| CO11(31) | -0,5 | -2,3 | -0,1 | 1,2 | 0,0 | 0,0 |
| CO11(32) | -8,4 | -8,2 | 0,0 | 1,2 | 0,0 | 0,0 |
| CO11(33) | 0,5 | -1,9 | 0,0 | 0,8 | 0,0 | 0,0 |
| CO11(34) | 0,4 | -3,2 | -0,1 | 1,4 | 0,0 | 0,0 |
| CO11(35) | -2,1 | -4,1 | 0,0 | 1,3 | 0,0 | 0,0 |
| CO11(36) | -0,6 | -4,0 | -0,1 | 1,5 | 0,0 | 0,0 |
| CO11(37) | -0,8 | -3,2 | -0,1 | 1,4 | 0,0 | 0,0 |
| CO11(14) | 1,0 | -1,2 | 0,0 | 0,8 | 0,0 | 0,0 |
| CO11(15) | -2,1 | -3,6 | 0,0 | 1,3 | 0,0 | 0,0 |
| CO11(19) | -0,5 | -3,5 | -0,1 | 1,4 | 0,0 | 0,0 |
| CO11(20) | 0,5 | -1,5 | -0,1 | 1,1 | 0,0 | 0,0 |
| CO11(21) | -5,7 | -7,1 | 0,0 | 1,4 | 0,0 | 0,0 |
| CO11(23) | -1,8 | -4,4 | -0,1 | 1,3 | 0,0 | 0,0 |
| CO11(25) | -5,1 | -7,0 | 0,0 | 1,2 | 0,0 | 0,0 |
| CO11(26) | -5,8 | -6,6 | 0,0 | 1,3 | 0,0 | 0,0 |
| CO11(2) | -7,1 | -6,7 | 0,0 | 0,6 | 0,0 | 0,0 |
| CO11(3) | 1,1 | -0,7 | 0,0 | 0,8 | 0,0 | 0,0 |
| CO11(5) | 0,3 | -2,4 | -0,1 | 1,4 | 0,0 | 0,0 |
| CO11(8) | 0,9 | -0,4 | 0,0 | 0,8 | 0,0 | 0,0 |
| CO11(9) | -7,1 | -7,1 | 0,0 | 0,6 | 0,0 | 0,0 |

## Nachweis

### Übersicht

| Name | Wert | Nachweisstatus |
|---|---|---|
| Berechnung | 100,0% | OK |
| Platten | 0,0 < 5,0% | OK |
| Schrauben | 41,6 < 100% | OK |
| Schweißnähte | 85,0 < 100% | OK |
| Beulen | Nicht berechnet | |

## Platten

| Name | Material | $t_p$ [mm] | Lasten | $\sigma_{Ed}$ [MPa] | $\varepsilon_{Pl}$ [%] | $\sigma_{c,Ed}$ [MPa] | Status |
|---|---|---|---|---|---|---|---|
| 315-bfl 1 | Baustahl S 355 | 10,7 | CO11(26) | 175,1 | 0,0 | 0,0 | OK |
| 315-tfl 1 | Baustahl S 355 | 10,7 | CO11(26) | 180,6 | 0,0 | 0,0 | OK |
| 315-w 1 | Baustahl S 355 | 7,1 | CO11(34) | 182,4 | 0,0 | 0,0 | OK |
| 317-bfl 1 | S 355 | 8,0 | CO11(36) | 97,4 | 0,0 | 0,0 | OK |
| 317-tfl 1 | S 355 | 8,0 | CO11(21) | 101,2 | 0,0 | 0,0 | OK |
| 317-w 1 | S 355 | 5,3 | CO11(26) | 256,6 | 0,0 | 14,9 | OK |
| 322-bfl 1 | S 355 | 8,0 | CO11(19) | 63,0 | 0,0 | 0,0 | OK |
| 322-tfl 1 | S 355 | 8,0 | CO11(15) | 59,5 | 0,0 | 0,0 | OK |
| 322-w 1 | S 355 | 5,3 | CO11(28) | 253,7 | 0,0 | 14,3 | OK |
| Fahnenblech1 | S 355 | 10,0 | CO11(21) | 267,1 | 0,0 | 22,9 | OK |
| Fahnenblech2 | S 355 | 10,0 | CO11(28) | 256,4 | 0,0 | 23,3 | OK |

**Bemessungsdaten**

| Material | $f_y$ [MPa] | $\varepsilon_{lim}$ [%] |
|---|---|---|
| Baustahl S 355 | 355,0 | 5,0 |
| S 355 | 355,0 | 5,0 |

**Erläuterung von Symbolen**

| | |
|---|---|
| $t_p$ | Plattendicke |
| $\sigma_{Ed}$ | Vergleichsspannung |
| $\varepsilon_{Pl}$ | Plastische Dehnung |
| $\sigma_{c,Ed}$ | Kontaktspannung |
| $f_y$ | Streckgrenze |
| $\varepsilon_{lim}$ | Grenzwert plastische Dehnung |

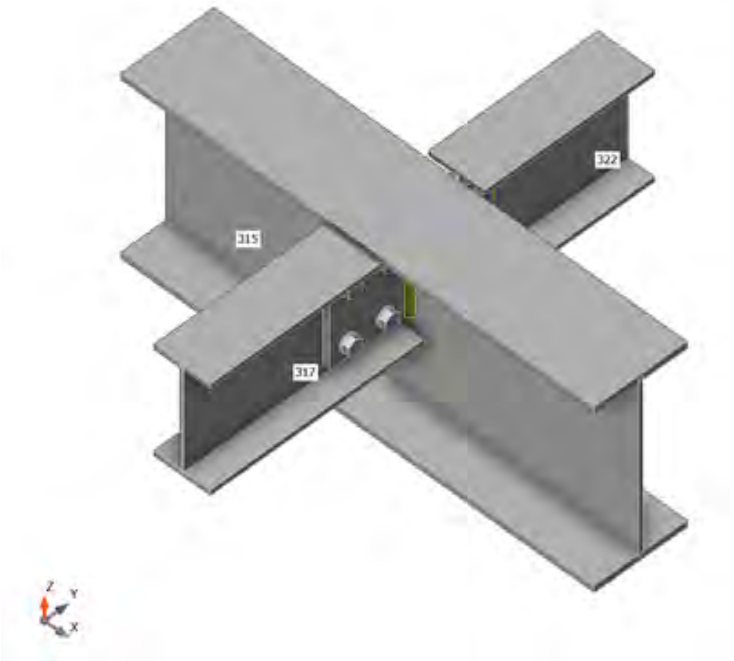


*Gesamt, CO11(28)*

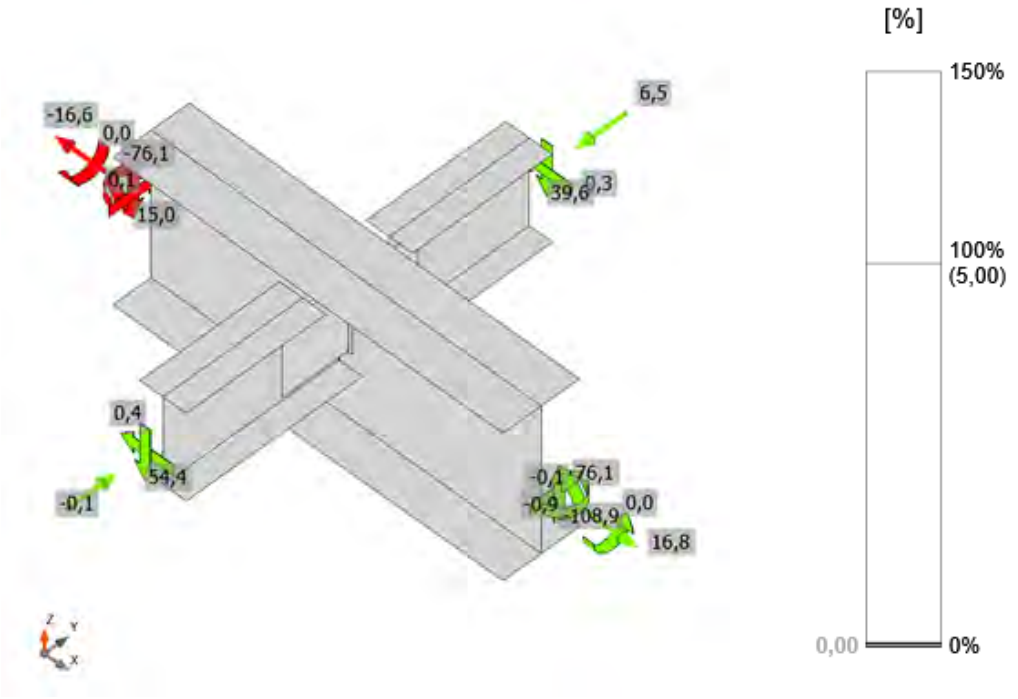


*Dehnung, CO11(28)*

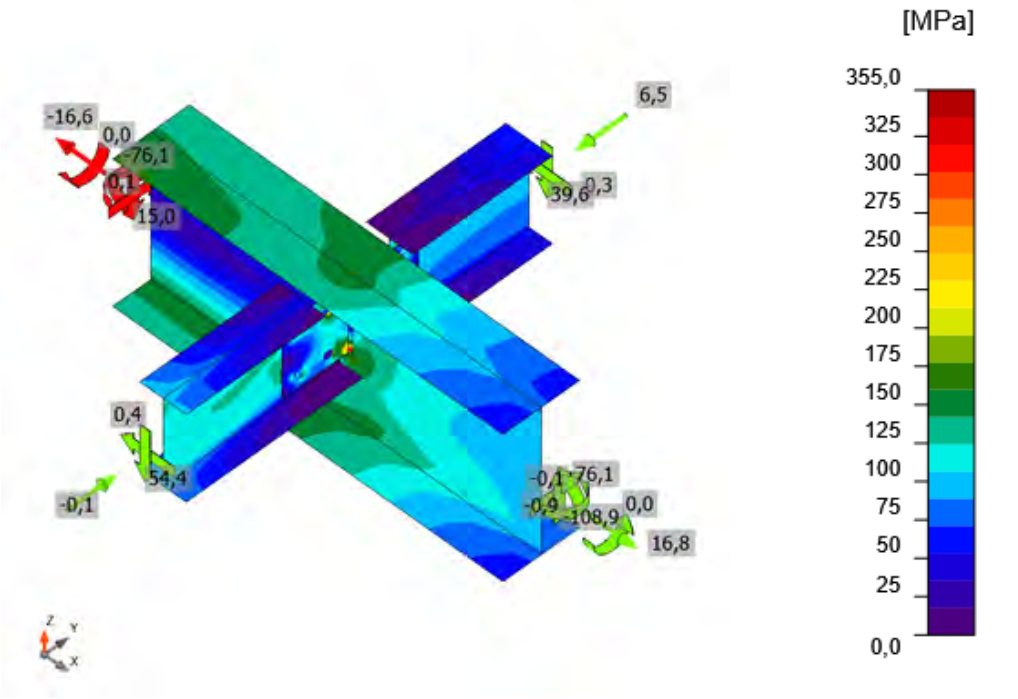


*Vergleichsspannung, CO11(28)*

## Schrauben

| Form | Position | Klasse | Lasten | $F_{t,Ed}$ [kN] | $F_{v,Ed}$ [kN] | $F_{b,Rd}$ [kN] | $Ut_t$ [%] | $Ut_s$ [%] | $Ut_{ts}$ [%] | Konstruktionsregeln | Status |
|---|---|---|---|---|---|---|---|---|---|---|---|
| 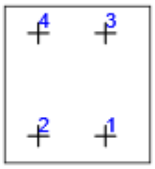 | B1 | M16 8.8 - 1 | CO11(36) | 1,6 | 12,1 | 58,7 | 1,8 | 20,6 | 21,3 | OK | OK |
| | B2 | M16 8.8 - 1 | CO11(15) | 3,0 | 20,8 | 57,4 | 3,4 | 36,3 | 36,9 | OK | OK |
| | B3 | M16 8.8 - 1 | CO11(21) | 4,5 | 12,1 | 29,1 | 4,9 | 41,6 | 23,6 | OK | OK |
| | B4 | M16 8.8 - 1 | CO11(15) | 3,9 | 20,7 | 52,1 | 4,3 | 39,8 | 37,5 | OK | OK |
| 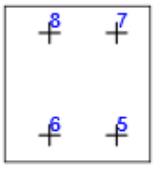 | B5 | M16 8.8 - 1 | CO11(28) | 3,4 | 23,2 | 57,2 | 3,8 | 40,6 | 41,3 | OK | OK |
| | B6 | M16 8.8 - 1 | CO11(28) | 2,5 | 15,1 | 71,6 | 2,8 | 25,0 | 27,0 | OK | OK |
| | B7 | M16 8.8 - 1 | CO11(21) | 2,6 | 21,7 | 52,1 | 2,8 | 41,6 | 38,0 | OK | OK |
| | B8 | M16 8.8 - 1 | CO11(15) | 3,0 | 12,1 | 35,5 | 3,3 | 34,0 | 22,4 | OK | OK |

**Bemessungsdaten**

| Klasse | $F_{t,Rd}$ [kN] | $B_{p,Rd}$ [kN] | $F_{v,Rd}$ [kN] |
|---|---|---|---|
| M16 8.8 - 1 | 90,4 | 99,4 | 60,3 |

**Erläuterung von Symbolen**

| | |
|---|---|
| $F_{t,Ed}$ | Zugkraft |
| $F_{v,Ed}$ | Resultierende der Schraubenscherkräfte Vy und Vz in Scherebenen |
| $F_{b,Rd}$ | Lochleibungstragfähigkeit der Platte nach EN 1993-1-8 Tab. 3.4 |
| $Ut_t$ | Ausnutzung unter Zug |
| $Ut_s$ | Ausnutzung unter Schub |
| $Ut_{ts}$ | Interaktion von Zug und Schub EN_1993-1-8 Tabelle 3.4 |
| $F_{t,Rd}$ | Zugtragfähigkeit der Schraube nach EN 1993-1-8 Tabelle 3.4 |
| $B_{p,Rd}$ | Durchstanztragfähigkeit nach EN 1993-1-8 Tabelle 3.4 |
| $F_{v,Rd}$ | Schertragfähigkeit der Schraube nach EN 1993-1-8 Tabelle 3.4 |

## Schweißnähte

| Position | Kante | $T_w$ [mm] | L [mm] | Lasten | $\sigma_{w,Ed}$ [MPa] | $\varepsilon_{Pl}$ [%] | $\sigma_{\perp}$ [MPa] | $\tau_{\perp}$ [MPa] | $\tau_{\parallel}$ [MPa] | Ut [%] | $Ut_c$ [%] | Konstruktionsregeln | Status |
|---|---|---|---|---|---|---|---|---|---|---|---|---|---|
| 315-w 1 | Fahnenblech1 | ◢ 6,0 ◣ | 138 | CO11(28) | 311,1 | 0,0 | -141,6 | -139,9 | -77,6 | 71,4 | 43,1 | OK | OK |
| | | ◢ 6,0 ◣ | 138 | CO11(36) | 281,7 | 0,0 | -123,2 | 125,0 | 75,8 | 64,7 | 40,6 | OK | OK |
| 315-w 1 | Fahnenblech2 | ◢ 6,0 ◣ | 139 | CO11(36) | 338,9 | 0,0 | -158,3 | -150,9 | 84,6 | 77,8 | 44,9 | OK | OK |
| | | ◢ 6,0 ◣ | 139 | CO11(27) | 370,4 | 0,0 | -156,3 | 162,0 | -106,4 | 85,0 | 42,2 | OK | OK |

**Bemessungsdaten**

| Material | $f_u$ [MPa] | $\beta_w$ [-] | $\sigma_{w,Rd}$ [MPa] | 0.9 σ [MPa] |
|---|---|---|---|---|
| S 355 | 490,0 | 0,90 | 435,6 | 352,8 |

**Erläuterung von Symbolen**

| | |
|---|---|
| $T_w$ | Nahtdicke a |
| L | Länge |
| $\sigma_{w,Ed}$ | Vergleichsspannung |
| $\varepsilon_{Pl}$ | Dehnung |
| $\sigma_{\perp}$ | Senkrechte Spannung |
| $\tau_{\perp}$ | Scherspannung senkrecht zur Schweißnahtachse |
| $\tau_{\parallel}$ | Scherspannung parallel zur Schweißnahtachse |
| Ut | Ausnutzung |
| $Ut_c$ | Schätzung der Schweißnahtkapazität |
| ◢ | Kehlnaht |
| $f_u$ | Grenzfestigkeit der Schweißnaht |
| $\beta_w$ | Korrelationsfaktor nach EN 1993-1-8 Tab. 4.1 |
| $\sigma_{w,Rd}$ | Tragfähigkeit der Schweißnaht |
| 0.9 σ | Senkrechter Spannungswiderstand - 0.9*fu / γM2 |

### Beulen

**Die Beulanalyse wurde nicht berechnet.**

## Normeinstellungen

| Position | Wert | Einheit | Bezug |
|---|---|---|---|
| Sicherheitsfaktor $\gamma_{M0}$ | 1,00 | - | EN 1993-1-1 – 6.1 |
| Sicherheitsfaktor $\gamma_{M1}$ | 1,00 | - | EN 1993-1-1 – 6.1 |
| Sicherheitsfaktor $\gamma_{M2}$ | 1,25 | - | EN 1993-1-1 – 6.1 |
| Sicherheitsfaktor $\gamma_{M3}$ | 1,25 | - | EN 1993-1-8 – Table 2.1 |
| Sicherheitsfaktor $\gamma_C$ | 1,50 | - | EN 1992-1-1 – 2.4.2.4 |
| Sicherheitsfaktor $\gamma_{Inst}$ | 1,20 | - | EN 1992-4 – Table 4.1 |
| Verbindungskoeffizient βj | 0,67 | - | EN 1993-1-8 – 6.2.5(7) |
| Wirksame Fläche - Einfluss der Netzgröße | 0,10 | - | |
| Reibungsbeiwert - Beton | 0,25 | - | EN 1993-1-8 |
| Reibungskoeffizient bei gleitfesten Verbindungen | 0,30 | - | EN 1993-1-8 – Table 3.7 |
| Plastische Dehnung - Grenzwert | 0,05 | - | EN 1993-1-5 |
| Konstruktionsregeln | Ja | | |
| Distance between bolts [d0] | 2,20 | - | EN 1993-1-8 – Table 3.3 |
| Distance between bolts and edge [d0] | 1,20 | - | EN 1993-1-8 – Table 3.3 |
| Nachweis der Tragfähigkeit bei Betonausbruch | Beide | | |
| Berechnetes αb für Lochleibungsnachweis anwenden. | Ja | | EN 1993-1-8 – Table 3.4 |
| Gerissener Beton | Ja | | EN 1992-4 |
| Überprüfen der lokalen Verformung | Ja | | |
| Lokale Verformung - Grenzwert | 0,03 | - | CIDECT DG 1, 3 – 1.1 |
| Geometrische Nichtlinearität (GMNA) | Ja | | Analyse mit großen Verformungen für Verbindungen mit Hohlprofilen |
| Ausgesteiftes System | Nein | | EN 1993-1-8 – 5.2.2.5 |

| | |
|---|---|
| **Projekt:** | **IdeaStatiCa-Stadion_Fazanerija_JK-6_BR - 1342** |
| **Projektnummer:** | **Detajl D2-E** |
| **Autor:** | **mag. Igor Gorup dipl. ing.** |

## Projektdaten

| | |
|---|---|
| Projektname | IdeaStatiCa-Stadion_Fazanerija_JK-6_BR - 1342 |
| Projektnummer | Detajl D2-E |
| Autor | mag. Igor Gorup dipl. ing. |
| Beschreibung | |
| Datum | 18.06.2025 |
| Norm | EN |

## Material

| | |
|---|---|
| Stahl | Baustahl S 355, Baustahl S 235, S 355 |

# Projektposition 1342

## Bemessung

| | |
|---|---|
| Name | 1342 |
| Beschreibung | |
| Berechnung | Spannung, Dehnung/ Lasten im Gleichgewicht |

### Bauteile

#### Geometrie

| Name | Querschnitt | β – Rotation [°] | Y - Rotation [°] | α - Rotation [°] | Abstand ex [mm] | Abstand ey [mm] | Abstand ez [mm] |
|---|---|---|---|---|---|---|---|
| 31 | 24 - IPE240 | 0,0 | 0,0 | -180,0 | 0 | 0 | 0 |
| 364 | 606 - IPE180 | -90,0 | 0,0 | -180,0 | 0 | 0 | -30 |

#### Auflager und Kräfte

| Name | Auflager | Kräfte in | X [mm] |
|---|---|---|---|
| 31 / anfang | N-Vy-Vz-Mx-My-Mz | Position | 0 |
| 31 / ende | | Position | 0 |
| 364 / ende | Mx-My-Mz | Schrauben | 53 |

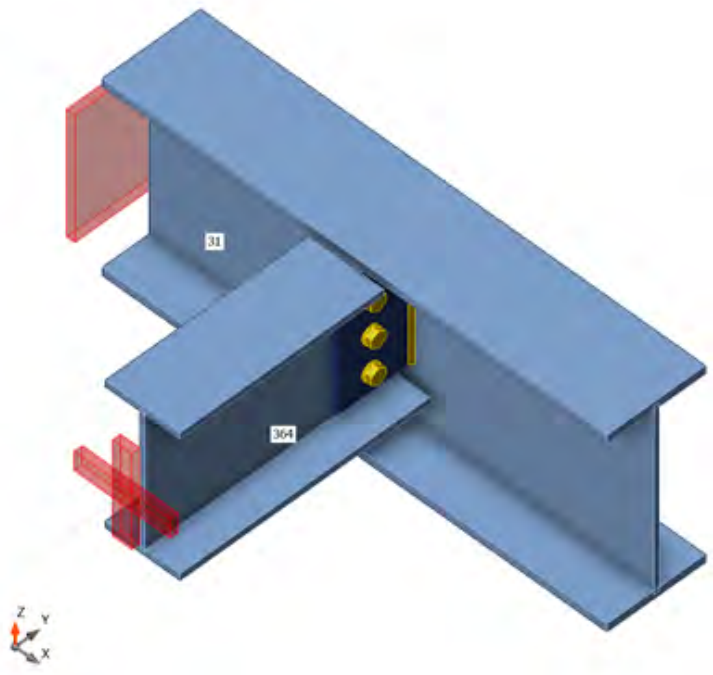


### Querschnitte

| Name | Material |
|---|---|
| 24 - IPE240 | Baustahl S 355 |
| 606 - IPE180 | S 355 |

## Schrauben

| Name | Durchmesser [mm] | $f_y$ [MPa] | $f_u$ [MPa] | Bruttofläche [$mm^2$] |
|---|---|---|---|---|
| M12 8.8 | 12 | 640,0 | 800,0 | 113 |

## Lasteinwirkungen (Kräfte im Gleichgewicht)

| Name | Bauteil | N [kN] | Vy [kN] | Vz [kN] | Mx [kNm] | My [kNm] | Mz [kNm] |
|---|---|---|---|---|---|---|---|
| CO11(10) | 31 / Anfang | -1,3 | 0,1 | 6,7 | 0,0 | -41,4 | 0,3 |
| | 31 / Ende | 1,1 | -0,4 | -52,8 | 0,0 | 41,4 | -0,3 |
| | 364 / Ende | -4,9 | 0,1 | 6,8 | 0,0 | 0,0 | 0,0 |
| CO9(11) | 31 / Anfang | 0,1 | 0,0 | 3,0 | 0,0 | 2,3 | 0,0 |
| | 31 / Ende | -0,6 | 0,0 | -3,0 | 0,0 | -2,3 | 0,0 |
| | 364 / Ende | 7,0 | 0,0 | 0,0 | 0,0 | 0,0 | 0,0 |
| CO11(12) | 31 / Anfang | -1,1 | 0,0 | 11,3 | 0,0 | -55,8 | 0,0 |
| | 31 / Ende | 0,9 | 0,0 | -75,0 | 0,0 | 55,8 | 0,0 |
| | 364 / Ende | 1,8 | 0,1 | 9,4 | 0,0 | 0,0 | 0,0 |
| CO11(13) | 31 / Anfang | -1,4 | 0,1 | 9,9 | 0,0 | -56,7 | 0,3 |
| | 31 / Ende | 1,4 | -0,4 | -73,5 | 0,0 | 56,7 | -0,3 |
| | 364 / Ende | -3,3 | 0,1 | 9,4 | 0,0 | 0,0 | 0,0 |
| CO11(14) | 31 / Anfang | -1,1 | 0,0 | 11,2 | 0,0 | -55,8 | 0,0 |
| | 31 / Ende | 0,9 | 0,0 | -75,0 | 0,0 | 55,8 | 0,0 |
| | 364 / Ende | 1,8 | 0,1 | 9,4 | 0,0 | 0,0 | 0,0 |
| CO11(15) | 31 / Anfang | -1,5 | 0,0 | 10,8 | 0,0 | -56,1 | 0,2 |
| | 31 / Ende | 1,0 | -0,3 | -74,5 | 0,0 | 56,1 | -0,2 |
| | 364 / Ende | -0,8 | 0,1 | 9,4 | 0,0 | 0,0 | 0,0 |
| CO11(16) | 31 / Anfang | -1,4 | 0,0 | 10,0 | 0,0 | -56,7 | -0,1 |
| | 31 / Ende | 1,7 | 0,1 | -73,8 | 0,0 | 56,7 | 0,1 |
| | 364 / Ende | -1,6 | 0,1 | 9,4 | 0,0 | 0,0 | 0,0 |
| CO11(17) | 31 / Anfang | -1,4 | -0,1 | 11,0 | 0,0 | -56,0 | -0,2 |
| | 31 / Ende | 1,4 | 0,3 | -74,8 | 0,0 | 56,0 | 0,2 |
| | 364 / Ende | 1,0 | 0,1 | 9,4 | 0,0 | 0,0 | 0,0 |
| CO11(18) | 31 / Anfang | -1,5 | 0,1 | 8,5 | 0,0 | -50,6 | 0,4 |
| | 31 / Ende | 1,3 | -0,5 | -64,9 | 0,0 | 50,6 | -0,4 |
| | 364 / Ende | -4,9 | 0,1 | 8,3 | 0,0 | 0,0 | 0,0 |
| CO11(19) | 31 / Anfang | -1,3 | 0,0 | 6,7 | 0,0 | -35,4 | 0,2 |
| | 31 / Ende | 0,6 | -0,3 | -46,4 | 0,0 | 35,4 | -0,2 |
| | 364 / Ende | -2,6 | 0,0 | 5,9 | 0,0 | 0,0 | 0,0 |
| CO11(2) | 31 / Anfang | -1,6 | 0,1 | 9,4 | 0,0 | -50,0 | 0,3 |
| | 31 / Ende | 1,0 | -0,4 | -65,8 | 0,0 | 50,0 | -0,3 |
| | 364 / Ende | -2,4 | 0,1 | 8,3 | 0,0 | 0,0 | 0,0 |
| CO11(3) | 31 / Anfang | -1,6 | -0,1 | 9,6 | 0,0 | -49,9 | -0,3 |
| | 31 / Ende | 1,5 | 0,4 | -66,3 | 0,0 | 49,9 | 0,3 |
| | 364 / Ende | 0,5 | 0,1 | 8,3 | 0,0 | 0,0 | 0,0 |
| CO11(6) | 31 / Anfang | -1,5 | -0,1 | 8,7 | 0,0 | -50,5 | -0,2 |
| | 31 / Ende | 1,8 | 0,2 | -65,3 | 0,0 | 50,6 | 0,2 |
| | 364 / Ende | -2,2 | 0,1 | 8,3 | 0,0 | 0,0 | 0,0 |
| CO11(7) | 31 / Anfang | -1,3 | 0,0 | 9,7 | 0,0 | -49,7 | 0,1 |
| | 31 / Ende | 0,9 | -0,2 | -66,2 | 0,0 | 49,8 | -0,1 |
| | 364 / Ende | -0,4 | 0,1 | 8,3 | 0,0 | 0,0 | 0,0 |
| CO11(9) | 31 / Anfang | -1,4 | 0,1 | 9,9 | 0,0 | -56,7 | 0,3 |
| | 31 / Ende | 1,5 | -0,4 | -73,5 | 0,0 | 56,7 | -0,3 |
| | 364 / Ende | -3,1 | 0,1 | 9,4 | 0,0 | 0,0 | 0,0 |

### Fehlende Lasten

| Name | X [kN] | Y [kN] | Z [kN] | Mx [kNm] | My [kNm] | Mz [kNm] |
|---|---|---|---|---|---|---|
| CO11(10) | -0,3 | 5,3 | 39,4 | 0,2 | 0,0 | 0,0 |
| CO9(11) | -0,4 | -7,0 | 0,0 | 0,2 | 0,0 | 0,0 |
| CO11(12) | -0,3 | -1,9 | 54,3 | 0,6 | 0,0 | 0,0 |
| CO11(13) | -0,1 | 3,6 | 54,3 | 0,4 | 0,0 | 0,0 |
| CO11(14) | -0,4 | -1,8 | 54,3 | 0,6 | 0,0 | 0,0 |
| CO11(15) | -0,6 | 1,0 | 54,3 | 0,5 | 0,0 | 0,0 |
| CO11(16) | 0,2 | 1,5 | 54,4 | 0,5 | 0,0 | 0,0 |
| CO11(17) | -0,2 | -1,3 | 54,4 | 0,5 | 0,0 | 0,0 |
| CO11(18) | -0,3 | 5,3 | 48,1 | 0,3 | 0,0 | 0,0 |
| CO11(19) | -0,8 | 2,8 | 33,9 | 0,2 | 0,0 | 0,0 |
| CO11(2) | -0,7 | 2,8 | 48,2 | 0,4 | 0,0 | 0,0 |
| CO11(3) | -0,2 | -0,8 | 48,3 | 0,5 | 0,0 | 0,0 |
| CO11(6) | 0,3 | 2,0 | 48,3 | 0,4 | 0,0 | 0,0 |
| CO11(7) | -0,5 | 0,6 | 48,2 | 0,4 | 0,0 | 0,0 |
| CO11(9) | 0,0 | 3,4 | 54,3 | 0,4 | 0,0 | 0,0 |

## Nachweis

### Übersicht

| Name | Wert | Nachweisstatus |
|---|---|---|
| Berechnung | 100,0% | OK |
| Platten | 0,0 < 5,0% | OK |
| Schrauben | 22,3 < 100% | OK |
| Schweißnähte | 58,1 < 100% | OK |
| Beulen | Nicht berechnet | |

### Platten

| Name | Material | $t_p$ [mm] | Lasten | $\sigma_{Ed}$ [MPa] | $\varepsilon_{Pl}$ [%] | $\sigma_{c,Ed}$ [MPa] | Status |
|---|---|---|---|---|---|---|---|
| 31-bfl 1 | Baustahl S 355 | 9,8 | CO11(13) | 267,4 | 0,0 | 0,0 | OK |
| 31-tfl 1 | Baustahl S 355 | 9,8 | CO11(13) | 267,3 | 0,0 | 0,0 | OK |
| 31-w 1 | Baustahl S 355 | 6,2 | CO11(13) | 227,9 | 0,0 | 0,0 | OK |
| 364-bfl 1 | S 355 | 8,0 | CO11(13) | 33,6 | 0,0 | 0,0 | OK |
| 364-tfl 1 | S 355 | 8,0 | CO11(18) | 44,2 | 0,0 | 0,0 | OK |
| 364-w 1 | S 355 | 5,3 | CO11(18) | 203,4 | 0,0 | 19,8 | OK |
| Fahnenblech1 | S 355 | 10,0 | CO9(11) | 139,5 | 0,0 | 19,0 | OK |

#### Bemessungsdaten

| Material | $f_y$ [MPa] | $\varepsilon_{lim}$ [%] |
|---|---|---|
| Baustahl S 355 | 355,0 | 5,0 |
| S 355 | 355,0 | 5,0 |

**Erläuterung von Symbolen**

| | |
|---|---|
| $t_p$ | Plattendicke |
| $\sigma_{Ed}$ | Vergleichsspannung |
| $\varepsilon_{Pl}$ | Plastische Dehnung |
| $\sigma_{c,Ed}$ | Kontaktspannung |
| $f_y$ | Streckgrenze |
| $\varepsilon_{lim}$ | Grenzwert plastische Dehnung |

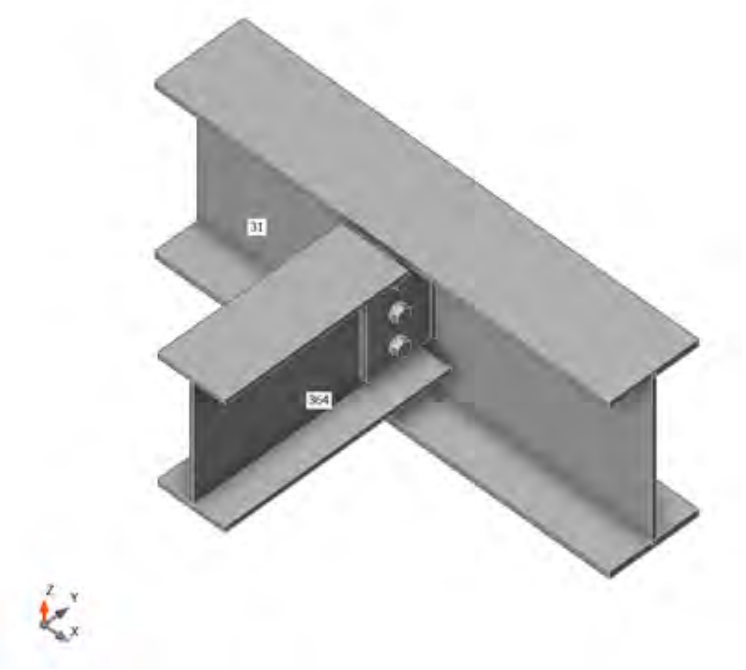


*Gesamt, CO11(13)*

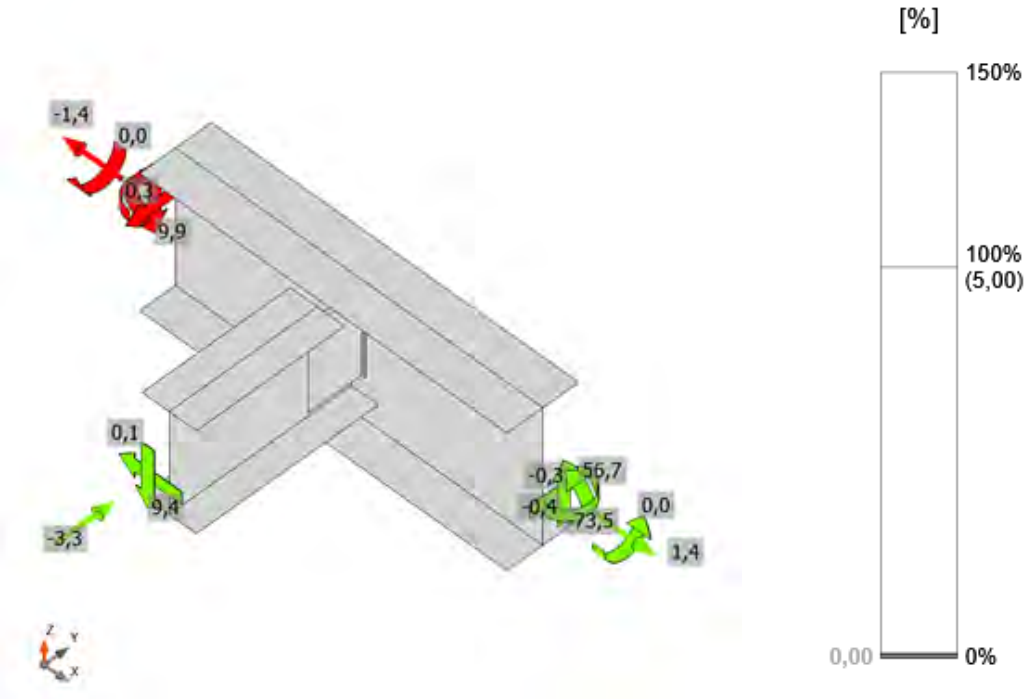


*Dehnung, CO11(13)*

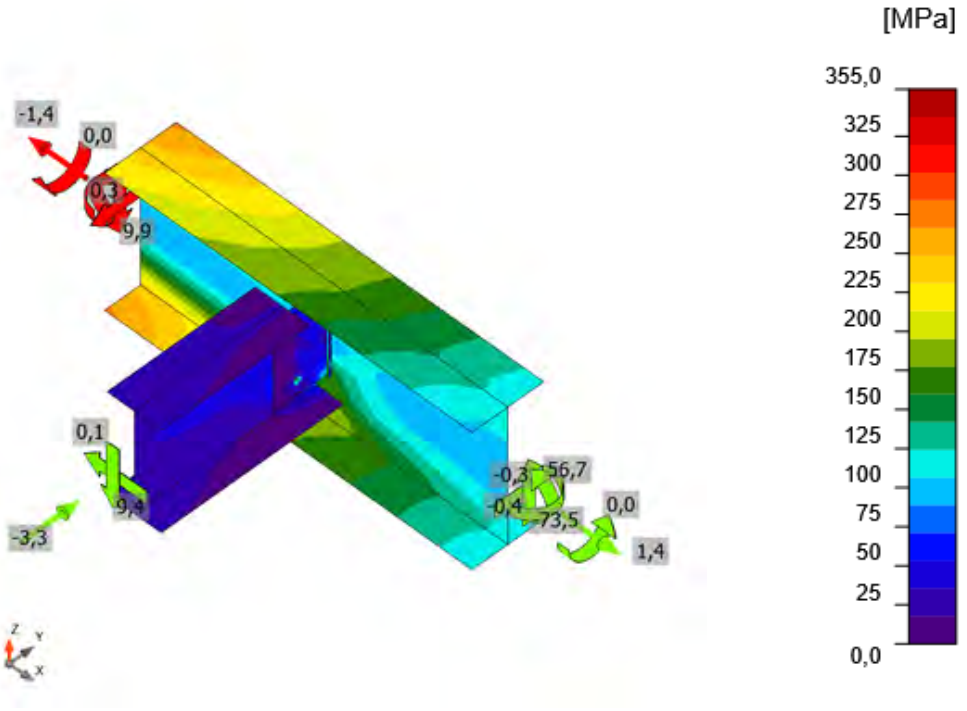


*Vergleichsspannung, CO11(13)*

## Schrauben

| Form | Position | Klasse | Lasten | $F_{t,Ed}$ [kN] | $F_{v,Ed}$ [kN] | $F_{b,Rd}$ [kN] | $Ut_t$ [%] | $Ut_s$ [%] | $Ut_{ts}$ [%] | Konstruktionsregeln | Status |
|---|---|---|---|---|---|---|---|---|---|---|---|
| 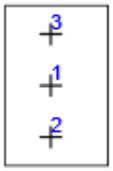 | B1 | M12 8.8 - 1 | CO11(18) | 1,5 | 3,2 | 62,3 | 3,1 | 9,8 | 12,0 | OK | OK |
| | B2 | M12 8.8 - 1 | CO11(12) | 2,2 | 6,2 | 62,3 | 4,5 | 19,1 | 22,3 | OK | OK |
| | B3 | M12 8.8 - 1 | CO11(9) | 1,6 | 5,6 | 55,7 | 3,2 | 17,3 | 19,6 | OK | OK |



**Bemessungsdaten**

| Klasse | $F_{t,Rd}$ [kN] | $B_{p,Rd}$ [kN] | $F_{v,Rd}$ [kN] |
|---|---|---|---|
| M12 8.8 - 1 | 48,6 | 74,5 | 32,4 |

**Erläuterung von Symbolen**

| | |
|---|---|
| $F_{t,Ed}$ | Zugkraft |
| $F_{v,Ed}$ | Resultierende der Schraubenscherkräfte Vy und Vz in Scherebenen |
| $F_{b,Rd}$ | Lochleibungstragfähigkeit der Platte nach EN 1993-1-8 Tab. 3.4 |
| $Ut_t$ | Ausnutzung unter Zug |
| $Ut_s$ | Ausnutzung unter Schub |
| $Ut_{ts}$ | Interaktion von Zug und Schub EN_1993-1-8 Tabelle 3.4 |
| $F_{t,Rd}$ | Zugtragfähigkeit der Schraube nach EN 1993-1-8 Tabelle 3.4 |
| $B_{p,Rd}$ | Durchstanztragfähigkeit nach EN 1993-1-8 Tabelle 3.4 |
| $F_{v,Rd}$ | Schertragfähigkeit der Schraube nach EN 1993-1-8 Tabelle 3.4 |

## Schweißnähte

| Position | Kante | $T_w$ [mm] | L [mm] | Lasten | $\sigma_{w,Ed}$ [MPa] | $\varepsilon_{Pl}$ [%] | $\sigma_{\perp}$ [MPa] | $\tau_{\perp}$ [MPa] | $\tau_{\parallel}$ [MPa] | Ut [%] | $Ut_c$ [%] | Konstruktionsregeln | Status |
|---|---|---|---|---|---|---|---|---|---|---|---|---|---|
| 31-w 1 | Fahnenblech1 | ◢ 3,0 ◣ | 139 | CO9(11) | 140,6 | 0,0 | 57,0 | 67,3 | 31,2 | 32,3 | 24,4 | OK | OK |
| | | ◢ 3,0 ◣ | 139 | CO9(11) | 253,1 | 0,0 | 122,1 | -111,8 | -62,4 | 58,1 | 37,0 | OK | OK |

**Bemessungsdaten**

| Material | $f_u$ [MPa] | $\beta_w$ [-] | $\sigma_{w,Rd}$ [MPa] | 0.9 σ [MPa] |
|---|---|---|---|---|
| S 355 | 490,0 | 0,90 | 435,6 | 352,8 |

**Erläuterung von Symbolen**

| | |
|---|---|
| $T_w$ | Nahtdicke a |
| L | Länge |
| $\sigma_{w,Ed}$ | Vergleichsspannung |
| $\varepsilon_{Pl}$ | Dehnung |
| $\sigma_{\perp}$ | Senkrechte Spannung |
| $\tau_{\perp}$ | Scherspannung senkrecht zur Schweißnahtachse |
| $\tau_{\parallel}$ | Scherspannung parallel zur Schweißnahtachse |
| Ut | Ausnutzung |
| $Ut_c$ | Schätzung der Schweißnahtkapazität |
| ◢ | Kehlnaht |
| $f_u$ | Grenzfestigkeit der Schweißnaht |
| $\beta_w$ | Korrelationsfaktor nach EN 1993-1-8 Tab. 4.1 |
| $\sigma_{w,Rd}$ | Tragfähigkeit der Schweißnaht |
| 0.9 σ | Senkrechter Spannungswiderstand - 0.9*fu / γM2 |

## Beulen

**Die Beulanalyse wurde nicht berechnet.**

## Normeinstellungen

| Position | Wert | Einheit | Bezug |
|---|---|---|---|
| Sicherheitsfaktor $\gamma_{M0}$ | 1,00 | - | EN 1993-1-1 – 6.1 |
| Sicherheitsfaktor $\gamma_{M1}$ | 1,00 | - | EN 1993-1-1 – 6.1 |
| Sicherheitsfaktor $\gamma_{M2}$ | 1,25 | - | EN 1993-1-1 – 6.1 |
| Sicherheitsfaktor $\gamma_{M3}$ | 1,25 | - | EN 1993-1-8 – Table 2.1 |
| Sicherheitsfaktor $\gamma_{C}$ | 1,50 | - | EN 1992-1-1 – 2.4.2.4 |
| Sicherheitsfaktor $\gamma_{Inst}$ | 1,20 | - | EN 1992-4 – Table 4.1 |
| Verbindungskoeffizient βj | 0,67 | - | EN 1993-1-8 – 6.2.5(7) |
| Wirksame Fläche - Einfluss der Netzgröße | 0,10 | - | |
| Reibungsbeiwert - Beton | 0,25 | - | EN 1993-1-8 |
| Reibungskoeffizient bei gleitfesten Verbindungen | 0,30 | - | EN 1993-1-8 – Table 3.7 |
| Plastische Dehnung - Grenzwert | 0,05 | - | EN 1993-1-5 |
| Konstruktionsregeln | Ja | | |
| Distance between bolts [d0] | 2,20 | - | EN 1993-1-8 – Table 3.3 |
| Distance between bolts and edge [d0] | 1,20 | - | EN 1993-1-8 – Table 3.3 |
| Nachweis der Tragfähigkeit bei Betonausbruch | Beide | | |
| Berechnetes αb für Lochleibungsnachweis anwenden. | Ja | | EN 1993-1-8 – Table 3.4 |
| Gerissener Beton | Ja | | EN 1992-4 |
| Überprüfen der lokalen Verformung | Ja | | |
| Lokale Verformung - Grenzwert | 0,03 | - | CIDECT DG 1, 3 – 1.1 |
| Geometrische Nichtlinearität (GMNA) | Ja | | Analyse mit großen Verformungen für Verbindungen mit Hohlprofilen |
| Ausgesteiftes System | Nein | | EN 1993-1-8 – 5.2.2.5 |

# DETAJLI NA STREŠNI KONSTRUKCIJI

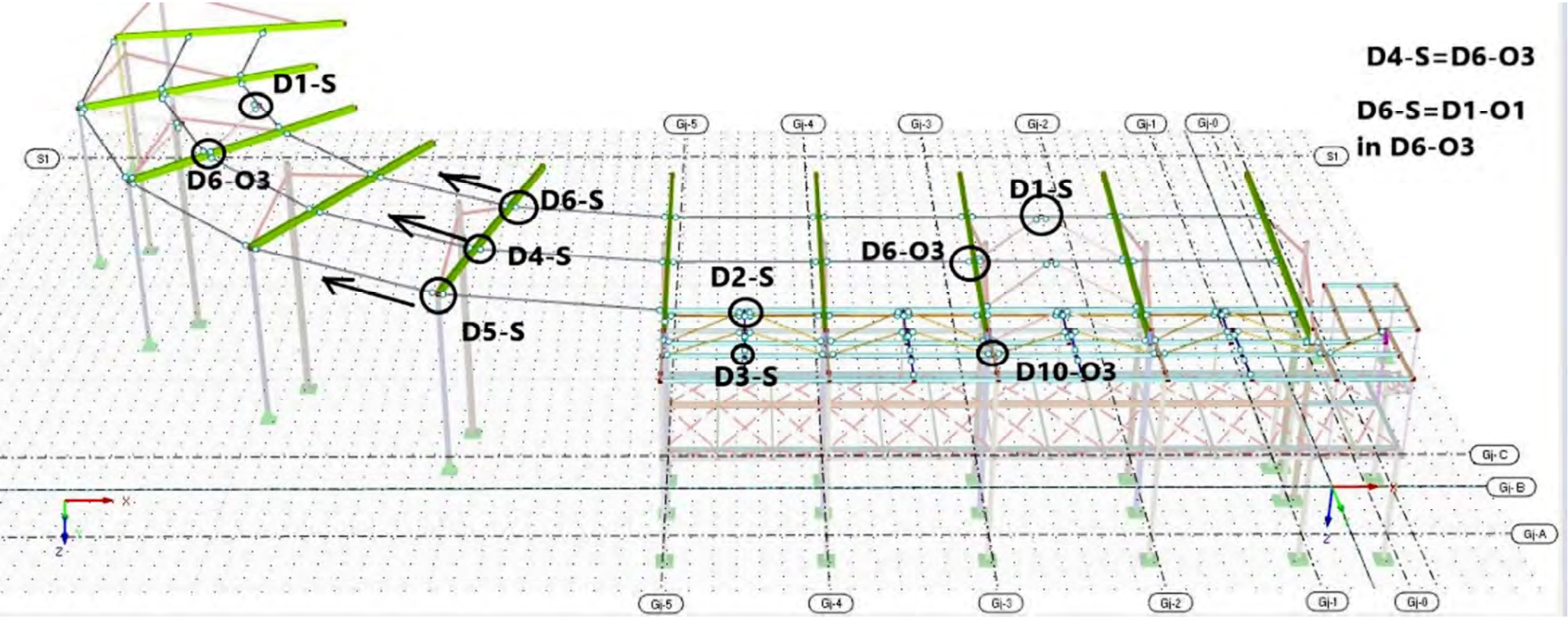

## Projektdaten

| | |
|---|---|
| Projektname | IdeaStatiCa-Stadion_Fazanerija_JK-6_BR - 103 |
| Projektnummer | Detajl D1-S |
| Autor | mag. Igor Gorup dipl.ing. |
| Beschreibung | |
| Datum | 18.06.2025 |
| Norm | EN |

## Material

| | |
|---|---|
| Stahl | Baustahl S 355, Baustahl S 235, S 355 |

# Projektposition 103

## Bemessung

| | |
|---|---|
| Name | 103 |
| Beschreibung | |
| Berechnung | Spannung, Dehnung/ Lasten im Gleichgewicht |

### Bauteile

#### Geometrie

| Name | Querschnitt | β – Rotation [°] | Y - Rotation [°] | α - Rotation [°] | Abstand ex [mm] | Abstand ey [mm] | Abstand ez [mm] |
|---|---|---|---|---|---|---|---|
| 510 | 470 - RO101.6X2.9 | 50,1 | 2,7 | 180,0 | 0 | 0 | 0 |
| 286 | 476 - RO101.6X4 | 0,0 | 0,0 | -180,0 | 0 | 0 | 0 |
| 509 | 470 - RO101.6X2.9 | 129,9 | 2,7 | -180,0 | 0 | 0 | 0 |

#### Auflager und Kräfte

| Name | Auflager | Kräfte in | X [mm] |
|---|---|---|---|
| 510 / ende | Mx-My-Mz | Schrauben | 0 |
| 286 / anfang | N-Vy-Vz-Mx-My-Mz | Position | 0 |
| 286 / ende | Mx-My-Mz | Position | 0 |
| 509 / ende | Mx-My-Mz | Schrauben | 0 |

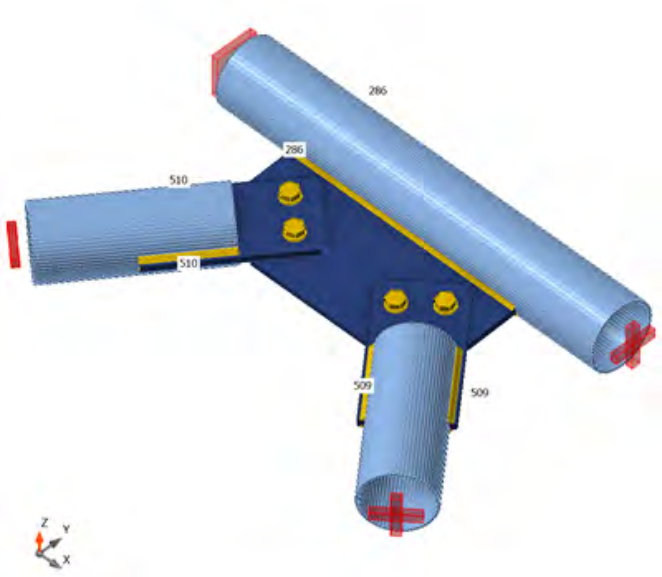


### Querschnitte

| Name | Material |
|---|---|
| 470 - RO101.6X2.9 | Baustahl S 355 |
| 476 - RO101.6X4 | Baustahl S 355 |

### Schrauben

| Name | Durchmesser [mm] | $f_y$ [MPa] | $f_u$ [MPa] | Bruttofläche [$mm^2$] |
|---|---|---|---|---|
| M16 8.8 | 16 | 640,0 | 800,0 | 201 |

## Lasteinwirkungen (Kräfte im Gleichgewicht)

| Name | Bauteil | N [kN] | Vy [kN] | Vz [kN] | Mx [kNm] | My [kNm] | Mz [kNm] |
|---|---|---|---|---|---|---|---|
| CO9(21) | 510 / Anfang | -39,6 | 0,0 | 0,0 | 0,0 | 0,0 | 0,0 |
| | 286 / Anfang | 26,1 | 0,0 | 0,0 | 0,0 | 0,0 | 0,0 |
| | 286 / Ende | 24,5 | 0,0 | 0,0 | 0,0 | 0,1 | 0,0 |
| | 509 / Anfang | 39,5 | 0,0 | 0,0 | 0,0 | 0,0 | 0,0 |
| CO11(22) | 510 / Anfang | 18,5 | 0,0 | 0,3 | 0,0 | 0,0 | 0,0 |
| | 286 / Anfang | -13,0 | 0,0 | -0,4 | 0,0 | -1,8 | -0,1 |
| | 286 / Ende | -10,6 | 0,0 | -0,2 | 0,0 | 1,8 | 0,1 |
| | 509 / Anfang | -18,4 | 0,0 | 0,2 | 0,0 | 0,0 | 0,0 |
| CO11(23) | 510 / Anfang | -19,6 | 0,0 | 0,2 | 0,0 | 0,0 | 0,0 |
| | 286 / Anfang | 13,9 | 0,0 | -0,2 | 0,0 | -1,8 | -0,2 |
| | 286 / Ende | 11,4 | 0,1 | -0,4 | 0,0 | 1,9 | 0,2 |
| | 509 / Anfang | 19,7 | 0,0 | 0,4 | 0,0 | 0,0 | 0,0 |
| CO11(24) | 510 / Anfang | 18,3 | 0,0 | 0,3 | 0,0 | 0,0 | 0,0 |
| | 286 / Anfang | -12,9 | 0,0 | -0,4 | 0,0 | -1,8 | -0,1 |
| | 286 / Ende | -10,5 | 0,0 | -0,2 | 0,0 | 1,7 | 0,1 |
| | 509 / Anfang | -18,3 | 0,0 | 0,2 | 0,0 | 0,0 | 0,0 |
| CO11(25) | 510 / Anfang | -19,8 | 0,0 | 0,2 | 0,0 | 0,0 | 0,0 |
| | 286 / Anfang | 14,2 | 0,0 | -0,2 | 0,0 | -1,8 | -0,2 |
| | 286 / Ende | 11,2 | 0,1 | -0,4 | 0,0 | 1,9 | 0,2 |
| | 509 / Anfang | 19,9 | 0,0 | 0,4 | 0,0 | 0,0 | 0,0 |
| CO11(26) | 510 / Anfang | 17,2 | 0,0 | 0,3 | 0,0 | 0,0 | 0,0 |
| | 286 / Anfang | -12,3 | 0,1 | -0,4 | 0,0 | -1,8 | -0,2 |
| | 286 / Ende | -9,7 | 0,0 | -0,2 | 0,0 | 1,7 | 0,2 |
| | 509 / Anfang | -17,1 | 0,0 | 0,2 | 0,0 | 0,0 | 0,0 |
| CO11(27) | 510 / Anfang | -14,2 | 0,0 | 0,2 | 0,0 | 0,0 | 0,0 |
| | 286 / Anfang | 10,0 | 0,0 | -0,2 | 0,0 | -1,8 | -0,1 |
| | 286 / Ende | 8,3 | 0,0 | -0,3 | 0,0 | 1,8 | 0,1 |
| | 509 / Anfang | 14,3 | 0,0 | 0,3 | 0,0 | 0,0 | 0,0 |
| CO11(28) | 510 / Anfang | -19,5 | 0,0 | 0,2 | 0,0 | 0,0 | 0,0 |
| | 286 / Anfang | 13,8 | 0,0 | -0,2 | 0,0 | -1,8 | -0,2 |
| | 286 / Ende | 11,3 | 0,1 | -0,4 | 0,0 | 1,9 | 0,2 |
| | 509 / Anfang | 19,6 | 0,0 | 0,4 | 0,0 | 0,0 | 0,0 |
| CO11(29) | 510 / Anfang | -16,4 | 0,0 | 0,2 | 0,0 | 0,0 | 0,0 |
| | 286 / Anfang | 11,6 | 0,0 | -0,2 | 0,0 | -1,8 | -0,1 |
| | 286 / Ende | 9,5 | 0,0 | -0,4 | 0,0 | 1,9 | 0,1 |
| | 509 / Anfang | 16,5 | 0,0 | 0,3 | 0,0 | 0,0 | 0,0 |
| CO11(12) | 510 / Anfang | 18,4 | 0,0 | 0,3 | 0,0 | 0,0 | 0,0 |
| | 286 / Anfang | -13,0 | 0,0 | -0,4 | 0,0 | -1,8 | -0,1 |
| | 286 / Ende | -10,5 | 0,0 | -0,2 | 0,0 | 1,8 | 0,1 |
| | 509 / Anfang | -18,3 | 0,0 | 0,2 | 0,0 | 0,0 | 0,0 |
| CO11(14) | 510 / Anfang | -19,3 | 0,0 | 0,2 | 0,0 | 0,0 | 0,0 |
| | 286 / Anfang | 13,9 | 0,0 | -0,2 | 0,0 | -1,8 | -0,2 |
| | 286 / Ende | 10,8 | 0,1 | -0,4 | 0,0 | 1,9 | 0,2 |
| | 509 / Anfang | 19,4 | 0,0 | 0,4 | 0,0 | 0,0 | 0,0 |
| CO11(15) | 510 / Anfang | -14,4 | 0,0 | 0,2 | 0,0 | 0,0 | 0,0 |
| | 286 / Anfang | 10,1 | 0,0 | -0,1 | 0,0 | -1,3 | -0,1 |
| | 286 / Ende | 8,4 | 0,0 | -0,3 | 0,0 | 1,4 | 0,1 |
| | 509 / Anfang | 14,4 | 0,0 | 0,2 | 0,0 | 0,0 | 0,0 |
| CO11(16) | 510 / Anfang | 17,1 | 0,0 | 0,3 | 0,0 | 0,0 | 0,0 |
| | 286 / Anfang | -12,2 | 0,1 | -0,4 | 0,0 | -1,8 | -0,2 |
| | 286 / Ende | -9,6 | 0,0 | -0,2 | 0,0 | 1,8 | 0,2 |
| | 509 / Anfang | -17,0 | 0,0 | 0,2 | 0,0 | 0,0 | 0,0 |

| Name | Bauteil | N [kN] | Vy [kN] | Vz [kN] | Mx [kNm] | My [kNm] | Mz [kNm] |
|---|---|---|---|---|---|---|---|
| CO11(18) | 510 / Anfang | -17,2 | 0,0 | 0,2 | 0,0 | 0,0 | 0,0 |
| | 286 / Anfang | 12,0 | 0,0 | -0,1 | 0,0 | -1,3 | -0,1 |
| | 286 / Ende | 10,1 | 0,0 | -0,3 | 0,0 | 1,4 | 0,1 |
| | 509 / Anfang | 17,3 | 0,0 | 0,3 | 0,0 | 0,0 | 0,0 |
| CO11(20) | 510 / Anfang | 18,2 | 0,0 | 0,3 | 0,0 | 0,0 | 0,0 |
| | 286 / Anfang | -12,8 | 0,0 | -0,3 | 0,0 | -1,3 | -0,1 |
| | 286 / Ende | -10,4 | 0,0 | -0,1 | 0,0 | 1,3 | 0,1 |
| | 509 / Anfang | -18,1 | 0,0 | 0,2 | 0,0 | 0,0 | 0,0 |
| CO11(7) | 510 / Anfang | -18,6 | 0,0 | 0,2 | 0,0 | 0,0 | 0,0 |
| | 286 / Anfang | 13,0 | 0,0 | -0,2 | 0,0 | -1,8 | -0,2 |
| | 286 / Ende | 10,9 | 0,1 | -0,4 | 0,0 | 1,9 | 0,2 |
| | 509 / Anfang | 18,7 | 0,0 | 0,3 | 0,0 | 0,0 | 0,0 |
| CO12(10) | 510 / Anfang | 17,7 | 0,0 | 0,3 | 0,0 | 0,0 | 0,0 |
| | 286 / Anfang | -12,5 | 0,0 | -0,3 | 0,0 | -1,3 | -0,1 |
| | 286 / Ende | -10,2 | 0,0 | -0,1 | 0,0 | 1,3 | 0,1 |
| | 509 / Anfang | -17,7 | 0,0 | 0,2 | 0,0 | 0,0 | 0,0 |

### Fehlende Lasten

| Name | X [kN] | Y [kN] | Z [kN] | Mx [kNm] | My [kNm] | Mz [kNm] |
|---|---|---|---|---|---|---|
| CO9(21) | -0,1 | -0,1 | 0,0 | 0,0 | -0,1 | 0,0 |
| CO11(22) | 0,0 | 0,0 | 0,0 | 0,0 | 0,0 | 0,0 |
| CO11(23) | 0,0 | 0,0 | 0,0 | 0,0 | -0,1 | 0,0 |
| CO11(24) | 0,0 | 0,0 | 0,0 | 0,0 | 0,0 | 0,0 |
| CO11(25) | 0,0 | 0,0 | 0,0 | 0,0 | -0,1 | 0,0 |
| CO11(26) | 0,0 | 0,0 | 0,0 | 0,0 | 0,0 | 0,0 |
| CO11(27) | 0,0 | 0,0 | 0,0 | 0,0 | -0,1 | 0,0 |
| CO11(28) | 0,0 | 0,0 | 0,0 | 0,0 | -0,1 | 0,0 |
| CO11(29) | 0,0 | 0,0 | 0,0 | 0,0 | -0,1 | 0,0 |
| CO11(12) | 0,0 | 0,0 | 0,0 | 0,0 | 0,0 | 0,0 |
| CO11(14) | 0,0 | 0,0 | 0,0 | 0,0 | -0,1 | 0,0 |
| CO11(15) | 0,0 | 0,0 | 0,0 | 0,0 | 0,0 | 0,0 |
| CO11(16) | 0,0 | 0,0 | 0,0 | 0,0 | 0,0 | 0,0 |
| CO11(18) | 0,0 | 0,0 | 0,0 | 0,0 | -0,1 | 0,0 |
| CO11(20) | 0,0 | 0,0 | 0,0 | 0,0 | 0,0 | 0,0 |
| CO11(7) | 0,0 | 0,0 | 0,0 | 0,0 | -0,1 | 0,0 |
| CO12(10) | 0,0 | 0,0 | 0,0 | 0,0 | 0,0 | 0,0 |

## Nachweis

### Übersicht

| Name | Wert | Nachweisstatus |
|---|---|---|
| Berechnung | 100,0% | OK |
| Platten | 0,0 < 5,0% | OK |
| Lokale Verformung | 0,1 < 3% | OK |
| Schrauben | 37,2 < 100% | OK |
| Schweißnähte | 31,2 < 100% | OK |
| Beulen | Nicht berechnet | |
| GMNA | Berechnet | |

## Platten

| Name | Material | $t_p$ [mm] | Lasten | $\sigma_{Ed}$ [MPa] | $\varepsilon_{Pl}$ [%] | $\sigma_{c,Ed}$ [MPa] | Status |
|---|---|---|---|---|---|---|---|
| 510 | Baustahl S 355 | 2,9 | CO9(21) | 198,8 | 0,0 | 0,0 | OK |
| 286 | Baustahl S 355 | 4,0 | CO9(21) | 296,4 | 0,0 | 0,0 | OK |
| 509 | Baustahl S 355 | 2,9 | CO9(21) | 220,6 | 0,0 | 0,0 | OK |
| Verbindungsblech1a | S 355 | 10,0 | CO9(21) | 143,4 | 0,0 | 8,1 | OK |
| Verbindungsblech1b | S 355 | 10,0 | CO9(21) | 134,0 | 0,0 | 12,5 | OK |
| Verbindungsblech2 | S 355 | 10,0 | CO9(21) | 121,2 | 0,0 | 8,5 | OK |

**Bemessungsdaten**

| Material | $f_y$ [MPa] | $\varepsilon_{lim}$ [%] |
|---|---|---|
| Baustahl S 355 | 355,0 | 5,0 |
| S 355 | 355,0 | 5,0 |

**Erläuterung von Symbolen**

| | |
|---|---|
| $t_p$ | Plattendicke |
| $\sigma_{Ed}$ | Vergleichsspannung |
| $\varepsilon_{Pl}$ | Plastische Dehnung |
| $\sigma_{c,Ed}$ | Kontaktspannung |
| $f_y$ | Streckgrenze |
| $\varepsilon_{lim}$ | Grenzwert plastische Dehnung |

## Lokale Verformung

| Name | $d_0$ [mm] | Lasten | $\delta$ [mm] | $\delta_{lim}$ [mm] | $\delta/d_0$ [%] | Nachweisstatus |
|---|---|---|---|---|---|---|
| 510 | 102 | CO12(10) | 0 | 3 | 0,0 | OK |
| 286 | 102 | CO9(21) | 0 | 3 | 0,1 | OK |
| 509 | 102 | CO9(21) | 0 | 3 | 0,1 | OK |

**Erläuterung von Symbolen**

| | |
|---|---|
| $d_0$ | Querschnittsgröße |
| $\delta$ | Lokale Verformung im Querschnitt |
| $\delta_{lim}$ | Zulässige Verformung |

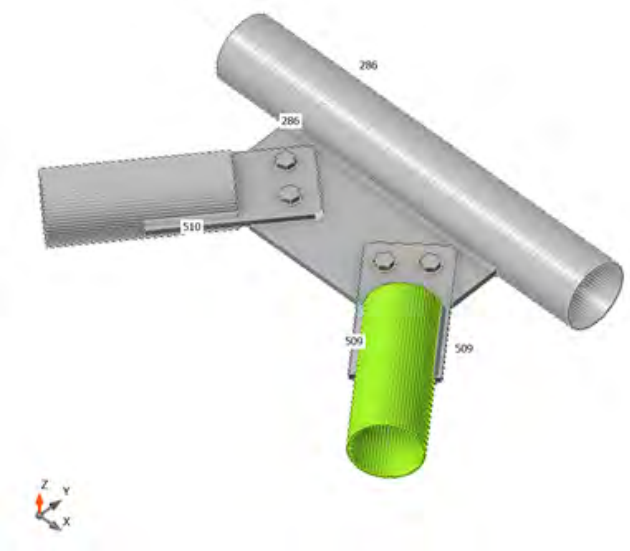


*Gesamt, CO9(21)*

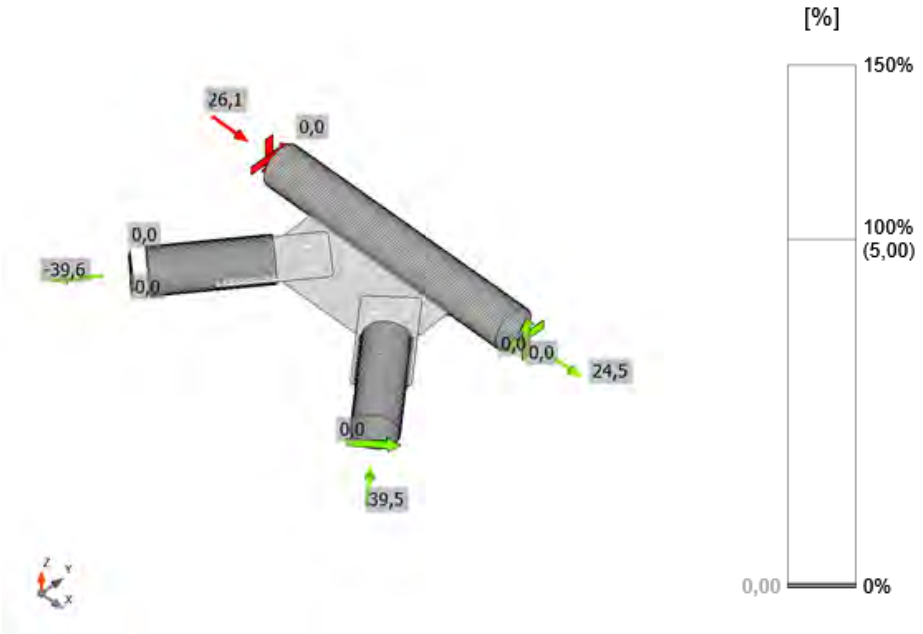


*Dehnung, CO9(21)*

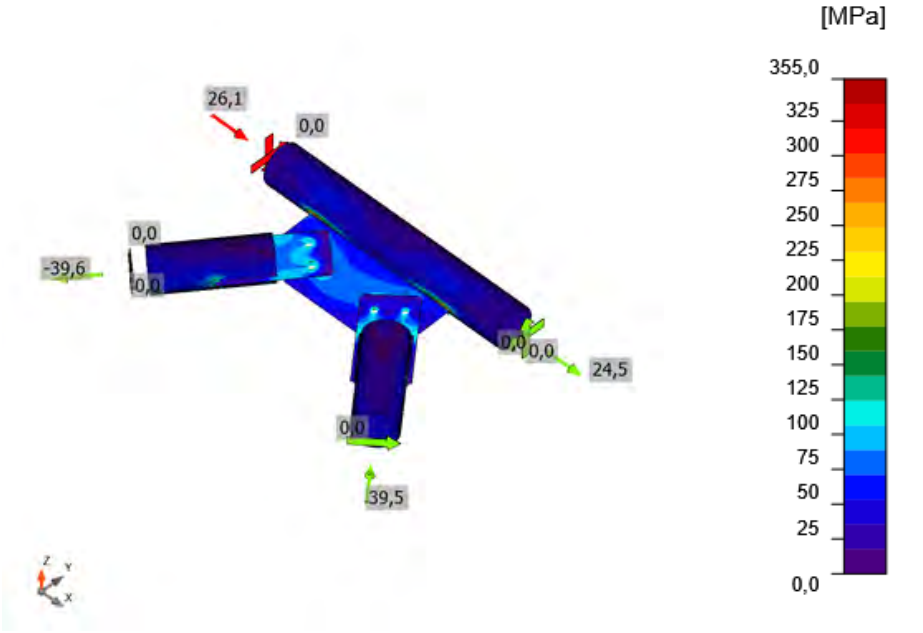


*Vergleichsspannung, CO9(21)*

## Schrauben

| Form | Position | Klasse | Lasten | $F_{t,Ed}$ [kN] | $F_{v,Ed}$ [kN] | $F_{b,Rd}$ [kN] | $Ut_t$ [%] | $Ut_s$ [%] | $Ut_{ts}$ [%] | Konstruktionsregeln | Status |
|---|---|---|---|---|---|---|---|---|---|---|---|
| 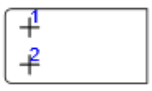 | B1 | M16 8.8 - 1 | CO9(21) | 3,2 | 19,0 | 116,1 | 3,5 | 31,6 | 34,1 | OK | OK |
| | B2 | M16 8.8 - 1 | CO9(21) | 3,4 | 20,6 | 116,1 | 3,7 | 34,1 | 36,8 | OK | OK |
| 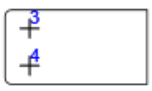 | B3 | M16 8.8 - 1 | CO9(21) | 4,4 | 18,9 | 156,8 | 4,8 | 31,4 | 34,9 | OK | OK |
| | B4 | M16 8.8 - 1 | CO9(21) | 4,0 | 20,5 | 156,8 | 4,4 | 34,1 | 37,2 | OK | OK |

**Bemessungsdaten**

| Klasse | $F_{t,Rd}$ [kN] | $B_{p,Rd}$ [kN] | $F_{v,Rd}$ [kN] |
|---|---|---|---|
| M16 8.8 - 1 | 90,4 | 187,5 | 60,3 |

**Erläuterung von Symbolen**

| | |
|---|---|
| $F_{t,Ed}$ | Zugkraft |
| $F_{v,Ed}$ | Resultierende der Schraubenscherkräfte Vy und Vz in Scherebenen |
| $F_{b,Rd}$ | Lochleibungstragfähigkeit der Platte nach EN 1993-1-8 Tab. 3.4 |
| $Ut_t$ | Ausnutzung unter Zug |
| $Ut_s$ | Ausnutzung unter Schub |
| $Ut_{ts}$ | Interaktion von Zug und Schub EN_1993-1-8 Tabelle 3.4 |
| $F_{t,Rd}$ | Zugtragfähigkeit der Schraube nach EN 1993-1-8 Tabelle 3.4 |
| $B_{p,Rd}$ | Durchstanztragfähigkeit nach EN 1993-1-8 Tabelle 3.4 |
| $F_{v,Rd}$ | Schertragfähigkeit der Schraube nach EN 1993-1-8 Tabelle 3.4 |

## Schweißnähte

| Position | Kante | $T_w$ [mm] | L [mm] | Lasten | $\sigma_{w,Ed}$ [MPa] | $\varepsilon_{Pl}$ [%] | $\sigma_{\perp}$ [MPa] | $\tau_{\perp}$ [MPa] | $\tau_{\parallel}$ [MPa] | Ut [%] | $Ut_c$ [%] | Konstruktionsregeln | Status |
|---|---|---|---|---|---|---|---|---|---|---|---|---|---|
| 286-arc 3 | Verbindungsblech1a | ◢ 4,0 ◣ | 378 | CO9(21) | 60,9 | 0,0 | 6,3 | 13,5 | 32,3 | 14,0 | 9,2 | OK | OK |
| | | ◢ 4,0 ◣ | 378 | CO9(21) | 103,0 | 0,0 | 60,0 | -44,1 | -19,8 | 23,6 | 19,3 | OK | OK |
| Verbindungsblech1b | 510-arc 2 | ◢ 4,0 | 119 | CO9(21) | 136,0 | 0,0 | -29,3 | 5,2 | 76,5 | 31,2 | 21,6 | OK | OK |
| Verbindungsblech1b | 510-arc 32 | ◢ 4,0 | 119 | CO9(21) | 128,3 | 0,0 | -27,1 | 4,7 | -72,3 | 29,5 | 18,6 | OK | OK |
| Verbindungsblech1b | 510-arc 34 | ◢ 4,0 | 119 | CO9(21) | 127,9 | 0,0 | -26,8 | 3,7 | 72,1 | 29,4 | 18,8 | OK | OK |
| Verbindungsblech1b | 510-arc 64 | ◢ 4,0 | 119 | CO9(21) | 135,8 | 0,0 | -25,8 | 4,0 | -76,9 | 31,2 | 16,3 | OK | OK |
| Verbindungsblech2 | 509-arc 1 | ◢ 4,0 | 119 | CO9(21) | 127,7 | 0,0 | 27,2 | -4,9 | -71,9 | 29,3 | 20,5 | OK | OK |
| Verbindungsblech2 | 509-arc 31 | ◢ 4,0 | 119 | CO9(21) | 135,6 | 0,0 | 29,8 | -5,3 | 76,2 | 31,1 | 19,9 | OK | OK |
| Verbindungsblech2 | 509-arc 33 | ◢ 4,0 | 119 | CO9(21) | 135,5 | 0,0 | 25,4 | -3,9 | -76,7 | 31,1 | 20,2 | OK | OK |
| Verbindungsblech2 | 509-arc 63 | ◢ 4,0 | 119 | CO9(21) | 127,0 | 0,0 | 26,7 | -3,6 | 71,6 | 29,1 | 16,4 | OK | OK |

**Bemessungsdaten**

| Material | $f_u$ [MPa] | $\beta_w$ [-] | $\sigma_{w,Rd}$ [MPa] | 0.9 σ [MPa] |
|---|---|---|---|---|
| S 355 | 490,0 | 0,90 | 435,6 | 352,8 |

**Erläuterung von Symbolen**

| | |
|---|---|
| $T_w$ | Nahtdicke a |
| L | Länge |
| $\sigma_{w,Ed}$ | Vergleichsspannung |
| $\varepsilon_{Pl}$ | Dehnung |
| $\sigma_{\perp}$ | Senkrechte Spannung |
| $\tau_{\perp}$ | Scherspannung senkrecht zur Schweißnahtachse |
| $\tau_{\parallel}$ | Scherspannung parallel zur Schweißnahtachse |
| Ut | Ausnutzung |
| $Ut_c$ | Schätzung der Schweißnahtkapazität |
| ◢ | Kehlnaht |
| $f_u$ | Grenzfestigkeit der Schweißnaht |
| $\beta_w$ | Korrelationsfaktor nach EN 1993-1-8 Tab. 4.1 |
| $\sigma_{w,Rd}$ | Tragfähigkeit der Schweißnaht |
| 0.9 σ | Senkrechter Spannungswiderstand - 0.9*fu / γM2 |

### Beulen

**Die Beulanalyse wurde nicht berechnet.**

## Normeinstellungen

| Position | Wert | Einheit | Bezug |
|---|---|---|---|
| Sicherheitsfaktor $\gamma_{M0}$ | 1,00 | - | EN 1993-1-1 – 6.1 |
| Sicherheitsfaktor $\gamma_{M1}$ | 1,00 | - | EN 1993-1-1 – 6.1 |
| Sicherheitsfaktor $\gamma_{M2}$ | 1,25 | - | EN 1993-1-1 – 6.1 |
| Sicherheitsfaktor $\gamma_{M3}$ | 1,25 | - | EN 1993-1-8 – Table 2.1 |
| Sicherheitsfaktor $\gamma_C$ | 1,50 | - | EN 1992-1-1 – 2.4.2.4 |
| Sicherheitsfaktor $\gamma_{Inst}$ | 1,20 | - | EN 1992-4 – Table 4.1 |
| Verbindungskoeffizient βj | 0,67 | - | EN 1993-1-8 – 6.2.5(7) |
| Wirksame Fläche - Einfluss der Netzgröße | 0,10 | - | |
| Reibungsbeiwert - Beton | 0,25 | - | EN 1993-1-8 |
| Reibungskoeffizient bei gleitfesten Verbindungen | 0,30 | - | EN 1993-1-8 – Table 3.7 |
| Plastische Dehnung - Grenzwert | 0,05 | - | EN 1993-1-5 |
| Konstruktionsregeln | Ja | | |
| Distance between bolts [d0] | 2,20 | - | EN 1993-1-8 – Table 3.3 |
| Distance between bolts and edge [d0] | 1,20 | - | EN 1993-1-8 – Table 3.3 |
| Nachweis der Tragfähigkeit bei Betonausbruch | Beide | | |
| Berechnetes αb für Lochleibungsnachweis anwenden. | Ja | | EN 1993-1-8 – Table 3.4 |
| Gerissener Beton | Ja | | EN 1992-4 |
| Überprüfen der lokalen Verformung | Ja | | |
| Lokale Verformung - Grenzwert | 0,03 | - | CIDECT DG 1, 3 – 1.1 |
| Geometrische Nichtlinearität (GMNA) | Ja | | Analyse mit großen Verformungen für Verbindungen mit Hohlprofilen |
| Ausgesteiftes System | Nein | | EN 1993-1-8 – 5.2.2.5 |

| | |
|---|---|
| **Projekt:** | **IdeaStatiCa-Stadion_Fazanerija_JK-6_BR - 55** |
| **Projektnummer:** | **Detajl D2-S** |
| **Autor:** | **mag. Igor Gorup dipl.ing.** |

## Projektdaten

| | |
|---|---|
| Projektname | IdeaStatiCa-Stadion_Fazanerija_JK-6_BR - 55 |
| Projektnummer | Detajl D2-S |
| Autor | mag. Igor Gorup dipl.ing. |
| Beschreibung | |
| Datum | 18.06.2025 |
| Norm | EN |

## Material

| | |
|---|---|
| Stahl | Baustahl S 355, Baustahl S 235, S 355 |

# Projektposition 55

## Bemessung

| | |
|---|---|
| Name | 55 |
| Beschreibung | |
| Berechnung | Spannung, Dehnung/ Lasten im Gleichgewicht |

### Bauteile

#### Geometrie

| Name | Querschnitt | β – Rotation [°] | Y - Rotation [°] | α - Rotation [°] | Abstand ex [mm] | Abstand ey [mm] | Abstand ez [mm] |
|---|---|---|---|---|---|---|---|
| 476 | 529 - RO76.1X2.9 | -32,2 | 0,4 | 180,0 | 0 | 0 | -30 |
| 84 | 648 - RHS80x80 | 90,0 | -0,8 | -180,0 | 0 | 0 | -30 |
| 169 | 24 - IPE240 | 0,0 | 0,0 | -180,0 | 0 | 0 | 0 |
| 474 | 529 - RO76.1X2.9 | 32,2 | -0,4 | -180,0 | 0 | 0 | -30 |

#### Auflager und Kräfte

| Name | Auflager | Kräfte in | X [mm] |
|---|---|---|---|
| 476 / ende | Mx-My-Mz | Schrauben | 0 |
| 84 / anfang | Mx-My-Mz | Position | 0 |
| 169 / anfang | N-Vy-Vz-Mx-My-Mz | Position | 0 |
| 169 / ende | | Position | 0 |
| 474 / ende | Mx-My-Mz | Schrauben | 0 |

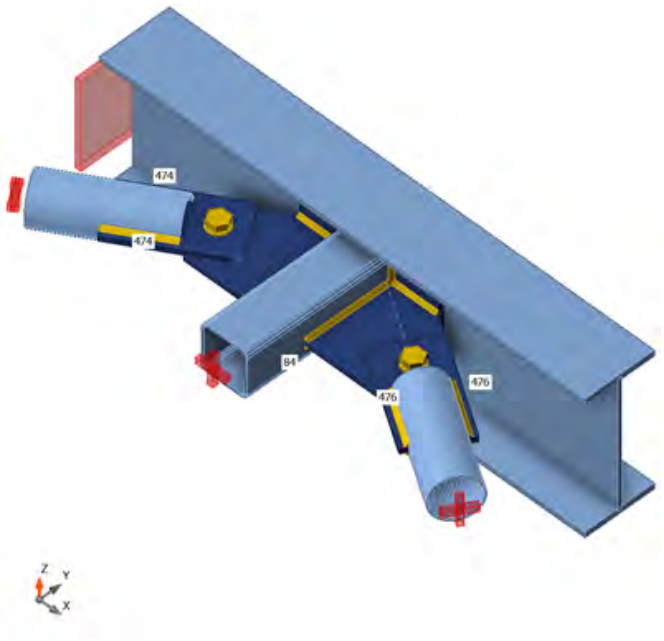


### Querschnitte

| Name | Material |
|---|---|
| 529 - RO76.1X2.9 | Baustahl S 355 |
| 648 - RHS80x80 | Baustahl S 355 |
| 24 - IPE240 | Baustahl S 355 |

## Schrauben

| Name | Durchmesser [mm] | $f_y$ [MPa] | $f_u$ [MPa] | Bruttofläche [$mm^2$] |
|---|---|---|---|---|
| M12 8.8 | 12 | 640,0 | 800,0 | 113 |
| M20 8.8 | 20 | 640,0 | 800,0 | 314 |

## Lasteinwirkungen (Kräfte im Gleichgewicht)

| Name | Bauteil | N [kN] | Vy [kN] | Vz [kN] | Mx [kNm] | My [kNm] | Mz [kNm] |
|---|---|---|---|---|---|---|---|
| CO11(34) | 476 / Ende | 6,0 | 0,0 | 0,1 | 0,0 | 0,0 | 0,0 |
| | 84 / Anfang | -2,3 | 0,0 | 0,1 | 0,0 | 0,0 | 0,0 |
| | 169 / Anfang | -13,6 | 0,1 | -0,4 | 0,0 | -2,3 | 0,0 |
| | 169 / Ende | -0,4 | 0,0 | 0,0 | 0,0 | 2,3 | 0,0 |
| | 474 / Anfang | 10,5 | 0,0 | 0,2 | 0,0 | 0,0 | 0,0 |
| CO11(35) | 476 / Ende | 0,4 | 0,0 | 0,1 | 0,0 | 0,0 | 0,0 |
| | 84 / Anfang | 6,3 | 0,0 | 0,1 | 0,0 | 0,0 | 0,0 |
| | 169 / Anfang | 18,1 | 0,1 | 0,6 | 0,0 | -4,2 | -0,1 |
| | 169 / Ende | -9,1 | 0,1 | -0,9 | 0,0 | 4,2 | 0,1 |
| | 474 / Anfang | -11,1 | 0,0 | 0,1 | 0,0 | 0,0 | 0,0 |
| CO11(36) | 476 / Ende | 2,2 | 0,0 | 0,1 | 0,0 | 0,0 | 0,0 |
| | 84 / Anfang | -0,2 | 0,0 | 0,1 | 0,0 | 0,0 | 0,0 |
| | 169 / Anfang | 13,9 | 0,0 | 0,5 | 0,0 | -8,1 | 0,0 |
| | 169 / Ende | -17,9 | 0,0 | -1,0 | 0,0 | 8,1 | 0,0 |
| | 474 / Anfang | 2,6 | 0,0 | 0,2 | 0,0 | 0,0 | 0,0 |
| CO11(37) | 476 / Ende | 5,5 | 0,0 | 0,1 | 0,0 | 0,0 | 0,0 |
| | 84 / Anfang | -2,3 | 0,0 | 0,1 | 0,0 | 0,0 | 0,0 |
| | 169 / Anfang | -12,4 | 0,1 | -0,6 | 0,0 | -1,3 | 0,0 |
| | 169 / Ende | -0,5 | 0,0 | 0,3 | 0,0 | 1,2 | 0,0 |
| | 474 / Anfang | 9,8 | 0,0 | 0,1 | 0,0 | 0,0 | 0,0 |
| CO11(38) | 476 / Ende | -0,3 | 0,0 | 0,2 | 0,0 | 0,0 | 0,0 |
| | 84 / Anfang | 3,6 | 0,0 | 0,1 | 0,0 | 0,0 | 0,0 |
| | 169 / Anfang | 23,4 | 0,1 | 1,3 | 0,0 | -8,6 | 0,0 |
| | 169 / Ende | -17,2 | 0,0 | -1,7 | 0,0 | 8,6 | 0,0 |
| | 474 / Anfang | -6,9 | 0,0 | 0,1 | 0,0 | 0,0 | 0,0 |
| CO11(39) | 476 / Ende | 5,8 | 0,0 | 0,1 | 0,0 | 0,0 | 0,0 |
| | 84 / Anfang | -2,3 | 0,0 | 0,1 | 0,0 | 0,0 | 0,0 |
| | 169 / Anfang | -15,3 | 0,1 | -0,5 | 0,0 | -1,2 | 0,0 |
| | 169 / Ende | 1,7 | 0,0 | 0,2 | 0,0 | 1,2 | 0,0 |
| | 474 / Anfang | 10,3 | 0,0 | 0,1 | 0,0 | 0,0 | 0,0 |
| CO11(40) | 476 / Ende | -1,7 | 0,0 | 0,2 | 0,0 | 0,0 | 0,0 |
| | 84 / Anfang | -0,2 | 0,0 | 0,1 | 0,0 | 0,0 | 0,0 |
| | 169 / Anfang | 20,7 | 0,0 | 1,5 | 0,0 | -8,2 | 0,0 |
| | 169 / Ende | -18,2 | 0,0 | -2,0 | 0,0 | 8,2 | 0,0 |
| | 474 / Anfang | -1,2 | 0,0 | 0,2 | 0,0 | 0,0 | 0,0 |
| CO11(41) | 476 / Ende | 4,6 | 0,0 | 0,1 | 0,0 | 0,0 | 0,0 |
| | 84 / Anfang | 6,2 | 0,0 | 0,1 | 0,0 | 0,0 | 0,0 |
| | 169 / Anfang | 11,9 | 0,1 | -0,1 | 0,0 | -6,9 | -0,1 |
| | 169 / Ende | -10,2 | 0,1 | -0,3 | 0,0 | 6,9 | 0,1 |
| | 474 / Anfang | -6,7 | 0,0 | 0,1 | 0,0 | 0,0 | 0,0 |
| CO11(42) | 476 / Ende | -0,6 | 0,0 | 0,2 | 0,0 | 0,0 | 0,0 |
| | 84 / Anfang | 3,7 | 0,0 | 0,1 | 0,0 | 0,0 | 0,0 |
| | 169 / Anfang | 25,9 | 0,1 | 1,3 | 0,0 | -8,7 | 0,0 |
| | 169 / Ende | -19,2 | 0,0 | -1,7 | 0,0 | 8,7 | 0,0 |
| | 474 / Anfang | -7,3 | 0,0 | 0,1 | 0,0 | 0,0 | 0,0 |
| CO11(43) | 476 / Ende | 2,0 | 0,0 | 0,1 | 0,0 | 0,0 | 0,0 |
| | 84 / Anfang | -2,3 | 0,0 | 0,1 | 0,0 | 0,0 | 0,0 |
| | 169 / Anfang | -6,6 | 0,1 | 0,2 | 0,0 | -1,4 | 0,0 |
| | 169 / Ende | -0,4 | 0,0 | -0,5 | 0,0 | 1,4 | 0,0 |
| | 474 / Anfang | 6,4 | 0,0 | 0,1 | 0,0 | 0,0 | 0,0 |
| CO9(44) | 476 / Ende | -0,1 | 0,0 | 0,0 | 0,0 | 0,0 | 0,0 |
| | 84 / Anfang | 3,1 | 0,0 | 0,0 | 0,0 | 0,0 | 0,0 |

| Name | Bauteil | N [kN] | Vy [kN] | Vz [kN] | Mx [kNm] | My [kNm] | Mz [kNm] |
|---|---|---|---|---|---|---|---|
| | 169 / Anfang | 7,0 | 0,1 | 1,7 | 0,0 | -0,1 | -0,1 |
| | 169 / Ende | -1,0 | 0,0 | -1,7 | 0,0 | 0,2 | 0,1 |
| | 474 / Anfang | -7,6 | 0,0 | 0,0 | 0,0 | 0,0 | 0,0 |
| CO11(45) | 476 / Ende | 0,4 | 0,0 | 0,2 | 0,0 | 0,0 | 0,0 |
| | 84 / Anfang | -1,5 | 0,0 | 0,1 | 0,0 | 0,0 | 0,0 |
| | 169 / Anfang | 11,8 | 0,1 | 1,2 | 0,0 | -7,0 | 0,0 |
| | 169 / Ende | -15,0 | 0,0 | -1,6 | 0,0 | 7,0 | 0,0 |
| | 474 / Anfang | 3,4 | 0,0 | 0,2 | 0,0 | 0,0 | 0,0 |
| CO11(46) | 476 / Ende | 4,2 | 0,0 | 0,1 | 0,0 | 0,0 | 0,0 |
| | 84 / Anfang | -1,5 | 0,0 | 0,1 | 0,0 | 0,0 | 0,0 |
| | 169 / Anfang | 5,2 | 0,1 | 0,2 | 0,0 | -6,9 | 0,0 |
| | 169 / Ende | -14,9 | 0,0 | -0,7 | 0,0 | 6,9 | 0,0 |
| | 474 / Anfang | 7,1 | 0,0 | 0,2 | 0,0 | 0,0 | 0,0 |
| CO11(47) | 476 / Ende | -0,6 | 0,0 | 0,1 | 0,0 | 0,0 | 0,0 |
| | 84 / Anfang | 3,7 | 0,0 | 0,1 | 0,0 | 0,0 | 0,0 |
| | 169 / Anfang | 23,9 | 0,1 | 1,1 | 0,0 | -7,6 | 0,0 |
| | 169 / Ende | -17,1 | 0,0 | -1,4 | 0,0 | 7,6 | 0,0 |
| | 474 / Anfang | -7,4 | 0,0 | 0,1 | 0,0 | 0,0 | 0,0 |
| CO11(26) | 476 / Ende | 1,9 | 0,0 | 0,1 | 0,0 | 0,0 | 0,0 |
| | 84 / Anfang | -0,1 | 0,0 | 0,1 | 0,0 | 0,0 | 0,0 |
| | 169 / Anfang | 16,6 | 0,0 | 0,5 | 0,0 | -8,2 | 0,0 |
| | 169 / Ende | -19,9 | 0,0 | -0,9 | 0,0 | 8,2 | 0,0 |
| | 474 / Anfang | 2,1 | 0,0 | 0,2 | 0,0 | 0,0 | 0,0 |
| CO11(29) | 476 / Ende | -0,9 | 0,0 | 0,1 | 0,0 | 0,0 | 0,0 |
| | 84 / Anfang | 3,7 | 0,0 | 0,1 | 0,0 | 0,0 | 0,0 |
| | 169 / Anfang | 21,7 | 0,1 | 1,0 | 0,0 | -4,0 | -0,1 |
| | 169 / Ende | -14,5 | 0,0 | -1,3 | 0,0 | 4,0 | 0,1 |
| | 474 / Anfang | -7,6 | 0,0 | 0,1 | 0,0 | 0,0 | 0,0 |
| CO11(30) | 476 / Ende | 3,3 | 0,0 | 0,1 | 0,0 | 0,0 | 0,0 |
| | 84 / Anfang | 3,7 | 0,0 | 0,1 | 0,0 | 0,0 | 0,0 |
| | 169 / Anfang | 19,0 | 0,1 | 0,3 | 0,0 | -8,6 | 0,0 |
| | 169 / Ende | -18,9 | 0,0 | -0,7 | 0,0 | 8,6 | 0,0 |
| | 474 / Anfang | -3,5 | 0,0 | 0,1 | 0,0 | 0,0 | 0,0 |
| CO11(31) | 476 / Ende | 0,8 | 0,0 | 0,2 | 0,0 | 0,0 | 0,0 |
| | 84 / Anfang | 6,2 | 0,0 | 0,1 | 0,0 | 0,0 | 0,0 |
| | 169 / Anfang | 18,6 | 0,1 | 0,9 | 0,0 | -7,0 | -0,1 |
| | 169 / Ende | -10,4 | 0,1 | -1,3 | 0,0 | 7,0 | 0,1 |
| | 474 / Anfang | -10,5 | 0,0 | 0,1 | 0,0 | 0,0 | 0,0 |
| CO11(33) | 476 / Ende | 0,6 | 0,0 | 0,1 | 0,0 | 0,0 | 0,0 |
| | 84 / Anfang | 6,2 | 0,0 | 0,1 | 0,0 | 0,0 | 0,0 |
| | 169 / Anfang | 15,5 | 0,1 | 0,7 | 0,0 | -4,1 | -0,1 |
| | 169 / Ende | -7,0 | 0,1 | -1,0 | 0,0 | 4,1 | 0,1 |
| | 474 / Anfang | -10,7 | 0,0 | 0,1 | 0,0 | 0,0 | 0,0 |
| CO11(12) | 476 / Ende | 4,3 | 0,0 | 0,1 | 0,0 | 0,0 | 0,0 |
| | 84 / Anfang | 6,3 | 0,0 | 0,1 | 0,0 | 0,0 | 0,0 |
| | 169 / Anfang | 12,6 | 0,1 | -0,2 | 0,0 | -5,8 | -0,1 |
| | 169 / Ende | -10,2 | 0,1 | 0,0 | 0,0 | 5,8 | 0,1 |
| | 474 / Anfang | -7,3 | 0,0 | 0,1 | 0,0 | 0,0 | 0,0 |
| CO11(13) | 476 / Ende | 2,0 | 0,0 | 0,1 | 0,0 | 0,0 | 0,0 |
| | 84 / Anfang | -2,4 | 0,0 | 0,1 | 0,0 | 0,0 | 0,0 |
| | 169 / Anfang | -2,0 | 0,1 | 0,6 | 0,0 | -2,5 | 0,0 |
| | 169 / Ende | -5,3 | 0,0 | -1,1 | 0,0 | 2,5 | 0,0 |
| | 474 / Anfang | 6,6 | 0,0 | 0,2 | 0,0 | 0,0 | 0,0 |

| Name | Bauteil | N [kN] | Vy [kN] | Vz [kN] | Mx [kNm] | My [kNm] | Mz [kNm] |
|---|---|---|---|---|---|---|---|
| CO11(14) | 476 / Ende | 5,5 | 0,0 | 0,1 | 0,0 | 0,0 | 0,0 |
| | 84 / Anfang | -2,3 | 0,0 | 0,1 | 0,0 | 0,0 | 0,0 |
| | 169 / Anfang | -10,0 | 0,1 | -0,4 | 0,0 | -1,3 | 0,0 |
| | 169 / Ende | -3,2 | 0,0 | 0,0 | 0,0 | 1,2 | 0,0 |
| | 474 / Anfang | 10,0 | 0,0 | 0,1 | 0,0 | 0,0 | 0,0 |
| CO11(15) | 476 / Ende | -2,0 | 0,0 | 0,2 | 0,0 | 0,0 | 0,0 |
| | 84 / Anfang | -0,1 | 0,0 | 0,1 | 0,0 | 0,0 | 0,0 |
| | 169 / Anfang | 23,3 | 0,0 | 1,5 | 0,0 | -8,3 | 0,0 |
| | 169 / Ende | -20,2 | 0,0 | -1,9 | 0,0 | 8,3 | 0,0 |
| | 474 / Anfang | -1,7 | 0,0 | 0,1 | 0,0 | 0,0 | 0,0 |
| CO11(16) | 476 / Ende | 4,4 | 0,0 | 0,1 | 0,0 | 0,0 | 0,0 |
| | 84 / Anfang | 6,3 | 0,0 | 0,1 | 0,0 | 0,0 | 0,0 |
| | 169 / Anfang | 14,5 | 0,1 | -0,1 | 0,0 | -7,0 | -0,1 |
| | 169 / Ende | -12,2 | 0,1 | -0,3 | 0,0 | 7,0 | 0,1 |
| | 474 / Anfang | -7,1 | 0,0 | 0,1 | 0,0 | 0,0 | 0,0 |
| CO11(22) | 476 / Ende | 0,0 | 0,0 | 0,1 | 0,0 | 0,0 | 0,0 |
| | 84 / Anfang | -1,5 | 0,0 | 0,1 | 0,0 | 0,0 | 0,0 |
| | 169 / Anfang | 7,7 | 0,1 | 0,9 | 0,0 | -2,2 | 0,0 |
| | 169 / Ende | -10,3 | 0,0 | -1,3 | 0,0 | 2,3 | 0,0 |
| | 474 / Anfang | 3,0 | 0,0 | 0,1 | 0,0 | 0,0 | 0,0 |
| CO11(1) | 476 / Ende | -2,3 | 0,0 | 0,1 | 0,0 | 0,0 | 0,0 |
| | 84 / Anfang | -0,1 | 0,0 | 0,1 | 0,0 | 0,0 | 0,0 |
| | 169 / Anfang | 19,1 | 0,0 | 1,2 | 0,0 | -3,5 | 0,0 |
| | 169 / Ende | -15,4 | 0,0 | -1,6 | 0,0 | 3,6 | 0,0 |
| | 474 / Anfang | -2,1 | 0,0 | 0,1 | 0,0 | 0,0 | 0,0 |
| CO11(5) | 476 / Ende | -2,3 | 0,0 | 0,2 | 0,0 | 0,0 | 0,0 |
| | 84 / Anfang | -0,2 | 0,0 | 0,1 | 0,0 | 0,0 | 0,0 |
| | 169 / Anfang | 21,1 | 0,0 | 1,4 | 0,0 | -4,7 | 0,0 |
| | 169 / Ende | -17,6 | 0,0 | -1,8 | 0,0 | 4,7 | 0,0 |
| | 474 / Anfang | -1,9 | 0,0 | 0,1 | 0,0 | 0,0 | 0,0 |

### Fehlende Lasten

| Name | X [kN] | Y [kN] | Z [kN] | Mx [kNm] | My [kNm] | Mz [kNm] |
|---|---|---|---|---|---|---|
| CO11(34) | 0,0 | 0,0 | 0,0 | 0,0 | 0,4 | 0,0 |
| CO11(35) | 0,0 | 0,0 | 0,0 | 0,0 | -0,3 | 0,0 |
| CO11(36) | 0,0 | 0,0 | 0,0 | 0,0 | 0,2 | 0,0 |
| CO11(37) | 0,0 | 0,0 | 0,0 | 0,0 | 0,4 | 0,0 |
| CO11(38) | 0,0 | 0,0 | 0,0 | 0,0 | -0,2 | 0,0 |
| CO11(39) | 0,0 | 0,0 | 0,0 | 0,0 | 0,4 | 0,0 |
| CO11(40) | 0,0 | 0,0 | 0,0 | 0,0 | -0,1 | 0,0 |
| CO11(41) | 0,0 | 0,0 | 0,0 | 0,0 | 0,0 | 0,0 |
| CO11(42) | 0,0 | 0,0 | 0,0 | 0,0 | -0,2 | 0,0 |
| CO11(43) | 0,0 | 0,0 | 0,0 | 0,0 | 0,2 | 0,0 |
| CO9(44) | -0,6 | -1,0 | 0,0 | 0,0 | -0,3 | 0,0 |
| CO11(45) | 0,0 | 0,0 | 0,0 | 0,0 | 0,1 | 0,0 |
| CO11(46) | 0,0 | 0,0 | 0,0 | 0,0 | 0,3 | 0,0 |
| CO11(47) | 0,0 | 0,0 | 0,0 | 0,0 | -0,2 | 0,0 |
| CO11(26) | 0,0 | 0,0 | 0,0 | 0,0 | 0,1 | 0,0 |
| CO11(29) | 0,0 | 0,0 | 0,0 | 0,0 | -0,2 | 0,0 |
| CO11(30) | 0,0 | 0,0 | 0,0 | 0,0 | 0,0 | 0,0 |
| CO11(31) | 0,0 | 0,0 | 0,0 | 0,0 | -0,3 | 0,0 |
| CO11(33) | 0,0 | 0,0 | 0,0 | 0,0 | -0,3 | 0,0 |
| CO11(12) | 0,0 | 0,0 | 0,0 | 0,0 | 0,0 | 0,0 |
| CO11(13) | 0,0 | 0,0 | 0,0 | 0,0 | 0,2 | 0,0 |
| CO11(14) | 0,0 | 0,0 | 0,0 | 0,0 | 0,4 | 0,0 |
| CO11(15) | 0,0 | 0,0 | 0,0 | 0,0 | -0,1 | 0,0 |
| CO11(16) | 0,0 | 0,0 | 0,0 | 0,0 | 0,0 | 0,0 |
| CO11(22) | 0,0 | 0,0 | 0,0 | 0,0 | 0,0 | 0,0 |
| CO11(1) | 0,0 | 0,0 | 0,0 | 0,0 | -0,1 | 0,0 |
| CO11(5) | 0,0 | 0,0 | 0,0 | 0,0 | -0,1 | 0,0 |

## Nachweis

### Übersicht

| Name | Wert | Nachweisstatus |
|---|---|---|
| Berechnung | 100,0% | OK |
| Platten | 0,0 < 5,0% | OK |
| Lokale Verformung | 0,0 < 3% | OK |
| Schrauben | 12,9 < 100% | OK |
| Schweißnähte | 13,8 < 100% | OK |
| Beulen | Nicht berechnet | |

## Platten

| Name | Material | $t_p$ [mm] | Lasten | $\sigma_{Ed}$ [MPa] | $\varepsilon_{Pl}$ [%] | $\sigma_{c,Ed}$ [MPa] | Status |
|---|---|---|---|---|---|---|---|
| 476 | Baustahl S 355 | 2,9 | CO11(34) | 49,8 | 0,0 | 0,0 | OK |
| 84 | Baustahl S 355 | 4,0 | CO11(31) | 62,2 | 0,0 | 0,0 | OK |
| 169-bfl 1 | Baustahl S 355 | 9,8 | CO11(42) | 35,9 | 0,0 | 0,0 | OK |
| 169-tfl 1 | Baustahl S 355 | 9,8 | CO11(30) | 24,0 | 0,0 | 0,0 | OK |
| 169-w 1 | Baustahl S 355 | 6,2 | CO9(44) | 53,0 | 0,0 | 7,2 | OK |
| 474 | Baustahl S 355 | 2,9 | CO11(31) | 78,5 | 0,0 | 0,0 | OK |
| Stirnblech1 | S 355 | 12,0 | CO11(34) | 24,7 | 0,0 | 3,4 | OK |
| Verbindungsblech1a | S 355 | 10,0 | CO11(35) | 54,6 | 0,0 | 4,7 | OK |
| Verbindungsblech1b | S 355 | 10,0 | CO11(35) | 68,0 | 0,0 | 4,8 | OK |
| Verbindungsblech2a | S 355 | 10,0 | CO11(34) | 42,8 | 0,0 | 2,5 | OK |
| Verbindungsblech2b | S 355 | 10,0 | CO11(34) | 36,0 | 0,0 | 2,5 | OK |

**Bemessungsdaten**

| Material | $f_y$ [MPa] | $\varepsilon_{lim}$ [%] |
|---|---|---|
| Baustahl S 355 | 355,0 | 5,0 |
| S 355 | 355,0 | 5,0 |

**Erläuterung von Symbolen**

| | |
|---|---|
| $t_p$ | Plattendicke |
| $\sigma_{Ed}$ | Vergleichsspannung |
| $\varepsilon_{Pl}$ | Plastische Dehnung |
| $\sigma_{c,Ed}$ | Kontaktspannung |
| $f_y$ | Streckgrenze |
| $\varepsilon_{lim}$ | Grenzwert plastische Dehnung |

## Lokale Verformung

| Name | $d_0$ [mm] | Lasten | $\delta$ [mm] | $\delta_{lim}$ [mm] | $\delta/d_0$ [%] | Nachweisstatus |
|---|---|---|---|---|---|---|
| 476 | 76 | CO11(5) | 0 | 2 | 0,0 | OK |
| 84 | 80 | CO11(5) | 0 | 2 | 0,0 | OK |
| 474 | 76 | CO11(5) | 0 | 2 | 0,0 | OK |

**Erläuterung von Symbolen**

| | |
|---|---|
| $d_0$ | Querschnittsgröße |
| $\delta$ | Lokale Verformung im Querschnitt |
| $\delta_{lim}$ | Zulässige Verformung |

*Gesamt, CO11(34)*

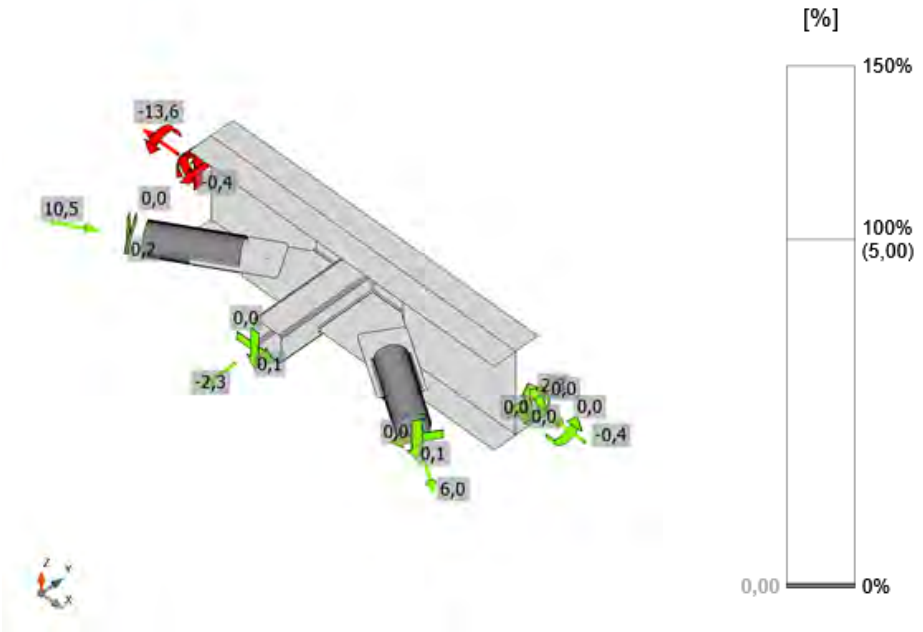


*Dehnung, CO11(34)*

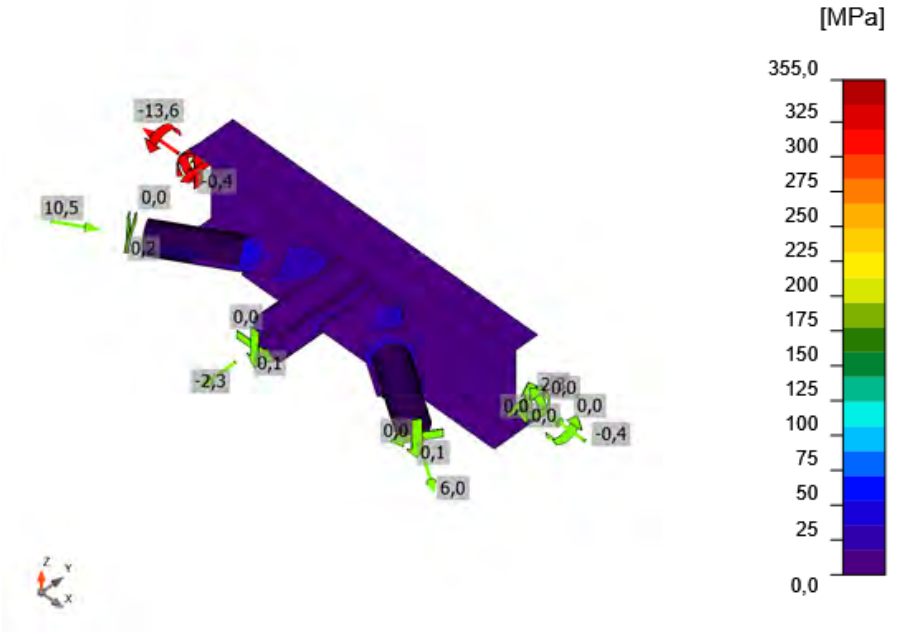


*Vergleichsspannung, CO11(34)*

## Schrauben

| Form | Position | Klasse | Lasten | $F_{t,Ed}$ [kN] | $F_{v,Ed}$ [kN] | $F_{b,Rd}$ [kN] | $Ut_t$ [%] | $Ut_s$ [%] | $Ut_{ts}$ [%] | Konstruktionsregeln | Status |
|---|---|---|---|---|---|---|---|---|---|---|---|
| 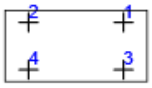 | B1 | M12 8.8 - 1 | CO11(34) | 0,7 | 3,5 | 72,9 | 1,4 | 10,9 | 11,9 | OK | OK |
| | B2 | M12 8.8 - 1 | CO11(34) | 0,5 | 3,5 | 72,9 | 1,0 | 10,7 | 11,5 | OK | OK |
| | B3 | M12 8.8 - 1 | CO11(34) | 0,6 | 3,5 | 72,9 | 1,3 | 10,7 | 11,6 | OK | OK |
| | B4 | M12 8.8 - 1 | CO11(34) | 0,6 | 3,5 | 72,9 | 1,1 | 10,9 | 11,7 | OK | OK |
| 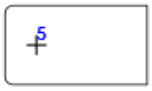 | B5 | M20 8.8 - 2 | CO11(35) | 2,2 | 11,1 | 94,5 | 1,6 | 11,8 | 12,9 | OK | OK |
| 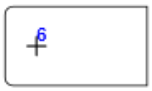 | B6 | M20 8.8 - 2 | CO11(34) | 1,1 | 6,0 | 94,5 | 0,8 | 6,3 | 6,9 | OK | OK |

**Bemessungsdaten**

| Klasse | $F_{t,Rd}$ [kN] | $B_{p,Rd}$ [kN] | $F_{v,Rd}$ [kN] |
|---|---|---|---|
| M12 8.8 - 1 | 48,6 | 87,1 | 32,4 |
| M20 8.8 - 2 | 141,1 | 234,7 | 94,1 |

**Erläuterung von Symbolen**

| | |
|---|---|
| $F_{t,Ed}$ | Zugkraft |
| $F_{v,Ed}$ | Resultierende der Schraubenscherkräfte Vy und Vz in Scherebenen |
| $F_{b,Rd}$ | Lochleibungstragfähigkeit der Platte nach EN 1993-1-8 Tab. 3.4 |
| $Ut_t$ | Ausnutzung unter Zug |
| $Ut_s$ | Ausnutzung unter Schub |
| $Ut_{ts}$ | Interaktion von Zug und Schub EN_1993-1-8 Tabelle 3.4 |
| $F_{t,Rd}$ | Zugtragfähigkeit der Schraube nach EN 1993-1-8 Tabelle 3.4 |
| $B_{p,Rd}$ | Durchstanztragfähigkeit nach EN 1993-1-8 Tabelle 3.4 |
| $F_{v,Rd}$ | Schertragfähigkeit der Schraube nach EN 1993-1-8 Tabelle 3.4 |

## Schweißnähte

| Position | Kante | $T_w$ [mm] | L [mm] | Lasten | $\sigma_{w,Ed}$ [MPa] | $\varepsilon_{Pl}$ [%] | $\sigma_{\perp}$ [MPa] | $\tau_{\perp}$ [MPa] | $\tau_{\parallel}$ [MPa] | Ut [%] | $Ut_c$ [%] | Konstruktionsregeln | Status |
|---|---|---|---|---|---|---|---|---|---|---|---|---|---|
| 84-w 4 | Verbindungsblech1a | ◢ 4,0 ◣ | 149 | CO11(35) | 23,5 | 0,0 | 4,7 | 6,1 | 11,8 | 5,4 | 5,4 | OK | OK |
| | | ◢ 4,0 ◣ | 149 | CO11(35) | 26,1 | 0,0 | 6,1 | -4,7 | -13,9 | 6,0 | 6,0 | OK | OK |
| Stirnblech1 | Verbindungsblech1a | ◢ 4,0 ◣ | 80 | CO11(35) | 20,0 | 0,0 | 2,5 | -1,7 | 11,3 | 4,6 | 4,6 | OK | OK |
| | | ◢ 4,0 ◣ | 80 | CO11(35) | 55,9 | 0,0 | 23,4 | 18,4 | -22,8 | 12,8 | 8,5 | OK | OK |
| Verbindungsblech1b | 474-arc 31 | ◢ 4,0 | 99 | CO11(35) | 45,4 | 0,0 | 19,7 | -12,6 | -20,0 | 10,4 | 8,3 | OK | OK |
| Verbindungsblech1b | 474-arc 63 | ◢ 4,0 | 99 | CO11(35) | 42,0 | 0,0 | -7,5 | 1,4 | -23,8 | 9,6 | 7,4 | OK | OK |
| 84-w 2 | Verbindungsblech2a | ◢ 4,0 ◣ | 149 | CO11(34) | 15,2 | 0,0 | 8,3 | 6,4 | -3,6 | 3,5 | 3,5 | OK | OK |
| | | ◢ 4,0 ◣ | 149 | CO9(44) | 15,4 | 0,0 | -2,8 | 2,5 | -8,4 | 3,5 | 3,5 | OK | OK |
| Stirnblech1 | Verbindungsblech2a | ◢ 4,0 ◣ | 80 | CO11(34) | 43,1 | 0,0 | 20,2 | -14,5 | 16,5 | 9,9 | 7,0 | OK | OK |
| | | ◢ 4,0 ◣ | 80 | CO11(42) | 23,3 | 0,0 | -13,6 | -8,6 | 6,7 | 5,3 | 5,3 | OK | OK |
| Verbindungsblech2b | 476-arc 31 | ◢ 4,0 | 99 | CO11(34) | 29,9 | 0,0 | 13,4 | -7,9 | 13,3 | 6,9 | 6,5 | OK | OK |
| Verbindungsblech2b | 476-arc 63 | ◢ 4,0 | 99 | CO11(34) | 22,7 | 0,0 | -3,5 | 0,7 | 13,0 | 5,2 | 5,2 | OK | OK |
| Stirnblech1 | 84 | ◢ 4,0 | 288 | CO11(35) | 27,9 | 0,0 | -1,3 | -15,7 | -3,6 | 6,4 | 5,8 | OK | OK |
| Verbindungsblech1b | 474 | ◢ 4,0 | 199 | CO11(31) | 60,0 | 0,0 | 25,0 | -15,0 | 27,7 | 13,8 | 9,3 | OK | OK |
| Verbindungsblech2b | 476 | ◢ 4,0 | 199 | CO11(34) | 26,5 | 0,0 | 10,7 | -7,1 | -12,0 | 6,1 | 6,1 | OK | OK |

**Bemessungsdaten**

| Material | $f_u$ [MPa] | $\beta_w$ [-] | $\sigma_{w,Rd}$ [MPa] | 0.9 σ [MPa] |
|---|---|---|---|---|
| S 355 | 490,0 | 0,90 | 435,6 | 352,8 |

**Erläuterung von Symbolen**

| | |
|---|---|
| $T_w$ | Nahtdicke a |
| L | Länge |
| $\sigma_{w,Ed}$ | Vergleichsspannung |
| $\varepsilon_{Pl}$ | Dehnung |
| $\sigma_{\perp}$ | Senkrechte Spannung |
| $\tau_{\perp}$ | Scherspannung senkrecht zur Schweißnahtachse |
| $\tau_{\parallel}$ | Scherspannung parallel zur Schweißnahtachse |
| Ut | Ausnutzung |
| $Ut_c$ | Schätzung der Schweißnahtkapazität |
| ◢ | Kehlnaht |
| $f_u$ | Grenzfestigkeit der Schweißnaht |
| $\beta_w$ | Korrelationsfaktor nach EN 1993-1-8 Tab. 4.1 |
| $\sigma_{w,Rd}$ | Tragfähigkeit der Schweißnaht |
| 0.9 σ | Senkrechter Spannungswiderstand - 0.9*fu / γM2 |

### Beulen

**Die Beulanalyse wurde nicht berechnet.**

## Normeinstellungen

| Position | Wert | Einheit | Bezug |
|---|---|---|---|
| Sicherheitsfaktor $\gamma_{M0}$ | 1,00 | - | EN 1993-1-1 – 6.1 |
| Sicherheitsfaktor $\gamma_{M1}$ | 1,00 | - | EN 1993-1-1 – 6.1 |
| Sicherheitsfaktor $\gamma_{M2}$ | 1,25 | - | EN 1993-1-1 – 6.1 |
| Sicherheitsfaktor $\gamma_{M3}$ | 1,25 | - | EN 1993-1-8 – Table 2.1 |
| Sicherheitsfaktor $\gamma_C$ | 1,50 | - | EN 1992-1-1 – 2.4.2.4 |
| Sicherheitsfaktor $\gamma_{Inst}$ | 1,20 | - | EN 1992-4 – Table 4.1 |
| Verbindungskoeffizient βj | 0,67 | - | EN 1993-1-8 – 6.2.5(7) |
| Wirksame Fläche - Einfluss der Netzgröße | 0,10 | - | |
| Reibungsbeiwert - Beton | 0,25 | - | EN 1993-1-8 |
| Reibungskoeffizient bei gleitfesten Verbindungen | 0,30 | - | EN 1993-1-8 – Table 3.7 |
| Plastische Dehnung - Grenzwert | 0,05 | - | EN 1993-1-5 |
| Konstruktionsregeln | Ja | | |
| Distance between bolts [d0] | 2,20 | - | EN 1993-1-8 – Table 3.3 |
| Distance between bolts and edge [d0] | 1,20 | - | EN 1993-1-8 – Table 3.3 |
| Nachweis der Tragfähigkeit bei Betonausbruch | Beide | | |
| Berechnetes αb für Lochleibungsnachweis anwenden. | Ja | | EN 1993-1-8 – Table 3.4 |
| Gerissener Beton | Ja | | EN 1992-4 |
| Überprüfen der lokalen Verformung | Ja | | |
| Lokale Verformung - Grenzwert | 0,03 | - | CIDECT DG 1, 3 – 1.1 |
| Geometrische Nichtlinearität (GMNA) | Ja | | Analyse mit großen Verformungen für Verbindungen mit Hohlprofilen |
| Ausgesteiftes System | Nein | | EN 1993-1-8 – 5.2.2.5 |

| | |
|---|---|
| **Projekt:** | **IdeaStatiCa-Stadion_Fazanerija_JK-6_BR - 54** |
| **Projektnummer:** | **Detajl D3-S** |
| **Autor:** | **mag. Igor Gorup dipl. ing.** |

## Projektdaten

| | |
|---|---|
| Projektname | IdeaStatiCa-Stadion_Fazanerija_JK-6_BR - 54 |
| Projektnummer | Detajl D3-S |
| Autor | mag. Igor Gorup dipl. ing. |
| Beschreibung | |
| Datum | 18.06.2025 |
| Norm | EN |

## Material

| | |
|---|---|
| Stahl | Baustahl S 355, Baustahl S 235, S 355 |

# Projektposition 54

## Bemessung

| | |
|---|---|
| Name | 54 |
| Beschreibung | |
| Berechnung | Spannung, Dehnung/ Lasten im Gleichgewicht |

### Bauteile

#### Geometrie

| Name | Querschnitt | β – Rotation [°] | Y - Rotation [°] | α - Rotation [°] | Abstand ex [mm] | Abstand ey [mm] | Abstand ez [mm] |
|---|---|---|---|---|---|---|---|
| 84 | 648 - RHS80x80 | 90,0 | -0,8 | -180,0 | 0 | 0 | -30 |
| 174 | 24 - IPE240 | 0,0 | 0,0 | -180,0 | 0 | 0 | 0 |
| 469 | 648 - RHS80x80 | 90,0 | -0,8 | -180,0 | 0 | 0 | -30 |

#### Auflager und Kräfte

| Name | Auflager | Kräfte in | X [mm] |
|---|---|---|---|
| 84 / ende | | Position | 0 |
| 174 / anfang | N-Vy-Vz-Mx-My-Mz | Position | 0 |
| 174 / ende | | Position | 0 |
| 469 / anfang | | Position | 0 |

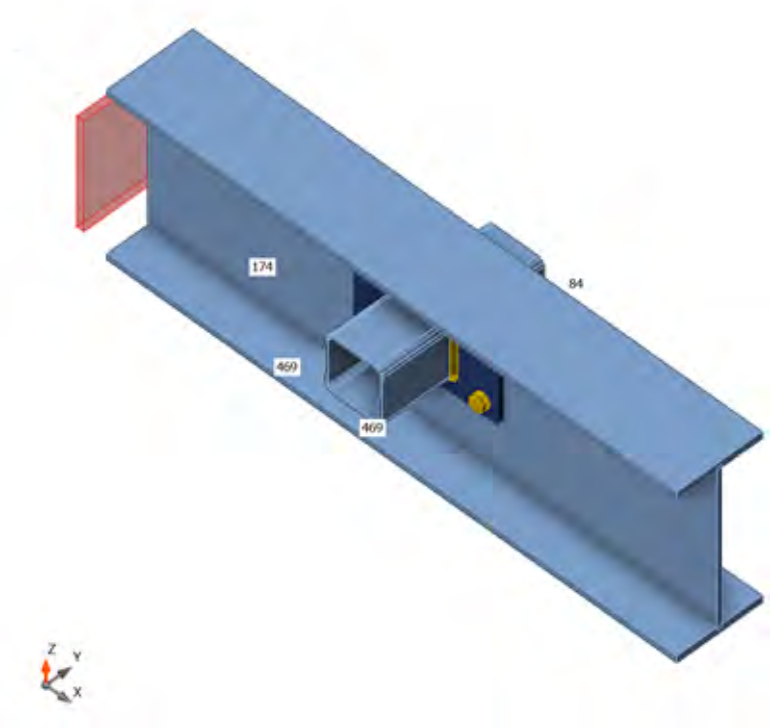


### Querschnitte

| Name | Material |
|---|---|
| 648 - RHS80x80 | Baustahl S 355 |
| 24 - IPE240 | Baustahl S 355 |

## Schrauben

| Name | Durchmesser [mm] | $f_y$ [MPa] | $f_u$ [MPa] | Bruttofläche [$mm^2$] |
|---|---|---|---|---|
| M12 8.8 | 12 | 640,0 | 800,0 | 113 |

## Lasteinwirkungen (Kräfte im Gleichgewicht)

| Name | Bauteil | N [kN] | Vy [kN] | Vz [kN] | Mx [kNm] | My [kNm] | Mz [kNm] |
|---|---|---|---|---|---|---|---|
| CO11(28) | 84 / Ende | -6,3 | 0,0 | 0,1 | 0,1 | 0,0 | 0,0 |
| | 174 / Anfang | 1,6 | 0,0 | 2,6 | 0,0 | -16,8 | 0,0 |
| | 174 / Ende | -1,6 | 0,0 | -2,9 | 0,0 | 16,9 | 0,0 |
| | 469 / Anfang | 6,4 | 0,0 | 0,1 | 0,0 | 0,0 | 0,0 |
| CO11(29) | 84 / Ende | 2,4 | 0,0 | 0,1 | 0,0 | 0,0 | 0,0 |
| | 174 / Anfang | -8,1 | -0,2 | 0,6 | 0,0 | -4,1 | 0,2 |
| | 174 / Ende | 8,1 | -0,1 | -0,9 | 0,0 | 4,1 | -0,2 |
| | 469 / Anfang | -2,8 | 0,0 | 0,1 | 0,0 | 0,0 | 0,0 |
| CO11(30) | 84 / Ende | 2,3 | 0,0 | 0,1 | 0,0 | 0,0 | 0,0 |
| | 174 / Anfang | -11,3 | -0,2 | 0,0 | 0,0 | -0,8 | 0,2 |
| | 174 / Ende | 11,3 | -0,1 | -0,2 | 0,0 | 0,8 | -0,2 |
| | 469 / Anfang | -2,7 | 0,0 | 0,1 | 0,0 | 0,0 | 0,0 |
| CO11(31) | 84 / Ende | 0,1 | 0,0 | 0,1 | 0,1 | 0,0 | 0,0 |
| | 174 / Anfang | 2,8 | -0,1 | 4,8 | 0,0 | -24,6 | 0,1 |
| | 174 / Ende | -2,8 | -0,1 | -5,1 | 0,0 | 24,7 | -0,1 |
| | 469 / Anfang | -0,3 | 0,0 | 0,1 | 0,0 | 0,0 | 0,0 |
| CO11(32) | 84 / Ende | -6,3 | 0,0 | 0,1 | 0,1 | 0,0 | 0,0 |
| | 174 / Anfang | 2,0 | 0,0 | 2,1 | 0,0 | -14,4 | 0,0 |
| | 174 / Ende | -2,0 | 0,0 | -2,4 | 0,0 | 14,4 | 0,0 |
| | 469 / Anfang | 6,3 | 0,0 | 0,1 | 0,0 | 0,0 | 0,0 |
| CO11(33) | 84 / Ende | 0,2 | 0,0 | 0,1 | 0,1 | 0,0 | 0,0 |
| | 174 / Anfang | 0,3 | -0,2 | 4,8 | 0,0 | -24,5 | 0,2 |
| | 174 / Ende | -0,3 | 0,0 | -5,0 | 0,0 | 24,6 | -0,2 |
| | 469 / Anfang | -0,4 | 0,0 | 0,1 | 0,0 | 0,0 | 0,0 |
| CO11(34) | 84 / Ende | 2,3 | 0,0 | 0,1 | 0,0 | 0,0 | 0,0 |
| | 174 / Anfang | -8,6 | -0,2 | 0,0 | 0,0 | -0,8 | 0,1 |
| | 174 / Ende | 8,7 | -0,1 | -0,2 | 0,0 | 0,8 | -0,1 |
| | 469 / Anfang | -2,6 | 0,0 | 0,1 | 0,0 | 0,0 | 0,0 |
| CO11(35) | 84 / Ende | -3,7 | 0,0 | 0,1 | 0,1 | 0,0 | 0,0 |
| | 174 / Anfang | 4,1 | 0,0 | 4,6 | 0,0 | -25,5 | 0,1 |
| | 174 / Ende | -4,1 | 0,0 | -4,9 | 0,0 | 25,6 | -0,1 |
| | 469 / Anfang | 3,6 | 0,0 | 0,1 | 0,0 | 0,0 | 0,0 |
| CO11(36) | 84 / Ende | 0,2 | 0,0 | 0,1 | 0,0 | 0,0 | 0,0 |
| | 174 / Anfang | 3,4 | -0,1 | 2,4 | 0,0 | -13,0 | 0,1 |
| | 174 / Ende | -3,4 | -0,1 | -2,7 | 0,0 | 13,0 | -0,1 |
| | 469 / Anfang | -0,4 | 0,0 | 0,1 | 0,0 | 0,0 | 0,0 |
| CO11(37) | 84 / Ende | 2,3 | 0,0 | 0,1 | 0,0 | 0,0 | 0,0 |
| | 174 / Anfang | -11,0 | -0,2 | 0,0 | 0,0 | -0,8 | 0,2 |
| | 174 / Ende | 11,0 | -0,1 | -0,2 | 0,0 | 0,8 | -0,2 |
| | 469 / Anfang | -2,7 | 0,0 | 0,1 | 0,0 | 0,0 | 0,0 |
| CO9(12) | 84 / Ende | -3,1 | 0,0 | 0,0 | -0,1 | 0,0 | 0,0 |
| | 174 / Anfang | 8,2 | -0,1 | 0,0 | 0,0 | 0,0 | 0,0 |
| | 174 / Ende | -9,1 | 0,1 | 0,0 | 0,0 | -0,1 | 0,0 |

| Name | Bauteil | N [kN] | Vy [kN] | Vz [kN] | Mx [kNm] | My [kNm] | Mz [kNm] |
|---|---|---|---|---|---|---|---|
| | 469 / Anfang | 1,4 | 0,0 | 0,0 | 0,0 | 0,0 | 0,0 |
| CO11(13) | 84 / Ende | 2,3 | 0,0 | 0,1 | 0,0 | 0,0 | 0,0 |
| | 174 / Anfang | -11,5 | -0,2 | 0,0 | 0,0 | -0,8 | 0,1 |
| | 174 / Ende | 11,5 | -0,1 | -0,2 | 0,0 | 0,8 | -0,1 |
| | 469 / Anfang | -2,5 | 0,0 | 0,1 | 0,0 | 0,0 | 0,0 |
| CO11(14) | 84 / Ende | 0,2 | 0,0 | 0,1 | 0,1 | 0,0 | 0,0 |
| | 174 / Anfang | 0,3 | -0,2 | 3,6 | 0,0 | -18,7 | 0,2 |
| | 174 / Ende | -0,3 | 0,0 | -3,9 | 0,0 | 18,8 | -0,2 |
| | 469 / Anfang | -0,4 | 0,0 | 0,1 | 0,0 | 0,0 | 0,0 |
| CO11(15) | 84 / Ende | -6,3 | 0,0 | 0,1 | 0,0 | 0,0 | 0,0 |
| | 174 / Anfang | 4,5 | 0,1 | 1,5 | 0,0 | -11,0 | 0,0 |
| | 174 / Ende | -4,5 | 0,0 | -1,7 | 0,0 | 11,0 | 0,0 |
| | 469 / Anfang | 6,3 | 0,0 | 0,1 | 0,0 | 0,0 | 0,0 |
| CO11(16) | 84 / Ende | 0,2 | 0,0 | 0,1 | 0,1 | 0,0 | 0,0 |
| | 174 / Anfang | 3,2 | -0,1 | 4,8 | 0,0 | -24,6 | 0,2 |
| | 174 / Ende | -3,2 | -0,1 | -5,0 | 0,0 | 24,7 | -0,2 |
| | 469 / Anfang | -0,4 | 0,0 | 0,1 | 0,0 | 0,0 | 0,0 |
| CO11(17) | 84 / Ende | -6,3 | 0,0 | 0,1 | 0,0 | 0,0 | 0,0 |
| | 174 / Anfang | 4,4 | 0,1 | 2,6 | 0,0 | -16,9 | 0,0 |
| | 174 / Ende | -4,4 | 0,0 | -2,9 | 0,0 | 16,9 | 0,0 |
| | 469 / Anfang | 6,3 | 0,0 | 0,1 | 0,0 | 0,0 | 0,0 |
| CO11(21) | 84 / Ende | 1,5 | 0,0 | 0,1 | 0,0 | 0,0 | 0,0 |
| | 174 / Anfang | -6,4 | -0,2 | 1,4 | 0,0 | -7,6 | 0,2 |
| | 174 / Ende | 6,4 | -0,1 | -1,6 | 0,0 | 7,6 | -0,2 |
| | 469 / Anfang | -1,8 | 0,0 | 0,1 | 0,0 | 0,0 | 0,0 |
| CO11(22) | 84 / Ende | 2,4 | 0,0 | 0,1 | 0,0 | 0,0 | 0,0 |
| | 174 / Anfang | -11,0 | -0,3 | 0,6 | 0,0 | -4,1 | 0,2 |
| | 174 / Ende | 11,0 | -0,1 | -0,9 | 0,0 | 4,1 | -0,2 |
| | 469 / Anfang | -2,7 | 0,0 | 0,1 | 0,0 | 0,0 | 0,0 |
| CO11(23) | 84 / Ende | 2,4 | 0,0 | 0,1 | 0,0 | 0,0 | 0,0 |
| | 174 / Anfang | -8,4 | -0,2 | 0,0 | 0,0 | -0,8 | 0,2 |
| | 174 / Ende | 8,4 | -0,1 | -0,2 | 0,0 | 0,8 | -0,2 |
| | 469 / Anfang | -2,7 | 0,0 | 0,1 | 0,0 | 0,0 | 0,0 |
| CO11(26) | 84 / Ende | -3,6 | 0,0 | 0,1 | 0,1 | 0,0 | 0,0 |
| | 174 / Anfang | 4,4 | -0,1 | 4,6 | 0,0 | -25,5 | 0,1 |
| | 174 / Ende | -4,4 | 0,0 | -4,9 | 0,0 | 25,6 | -0,1 |
| | 469 / Anfang | 3,5 | 0,0 | 0,1 | 0,0 | 0,0 | 0,0 |
| CO11(27) | 84 / Ende | 2,3 | 0,0 | 0,1 | 0,0 | 0,0 | 0,0 |
| | 174 / Anfang | -10,9 | -0,3 | 1,8 | 0,0 | -9,8 | 0,2 |
| | 174 / Ende | 10,9 | -0,1 | -2,0 | 0,0 | 9,9 | -0,2 |
| | 469 / Anfang | -2,7 | 0,0 | 0,1 | 0,0 | 0,0 | 0,0 |
| CO11(5) | 84 / Ende | -6,3 | 0,0 | 0,1 | 0,1 | 0,0 | 0,0 |
| | 174 / Anfang | 1,9 | 0,0 | 3,3 | 0,0 | -20,2 | 0,0 |
| | 174 / Ende | -1,9 | 0,0 | -3,6 | 0,0 | 20,3 | 0,0 |
| | 469 / Anfang | 6,3 | 0,0 | 0,1 | 0,0 | 0,0 | 0,0 |

| Name | Bauteil | N [kN] | Vy [kN] | Vz [kN] | Mx [kNm] | My [kNm] | Mz [kNm] |
|---|---|---|---|---|---|---|---|
| CO11(7) | 84 / Ende | 0,1 | 0,0 | 0,1 | 0,1 | 0,0 | 0,0 |
| | 174 / Anfang | 0,0 | -0,1 | 4,8 | 0,0 | -24,5 | 0,1 |
| | 174 / Ende | 0,0 | 0,0 | -5,0 | 0,0 | 24,6 | -0,1 |
| | 469 / Anfang | -0,3 | 0,0 | 0,1 | 0,0 | 0,0 | 0,0 |
| CO11(8) | 84 / Ende | -6,2 | 0,0 | 0,1 | 0,1 | 0,0 | 0,0 |
| | 174 / Anfang | 2,3 | -0,1 | 3,3 | 0,0 | -20,2 | 0,1 |
| | 174 / Ende | -2,3 | 0,0 | -3,6 | 0,0 | 20,3 | -0,1 |
| | 469 / Anfang | 6,2 | 0,0 | 0,1 | 0,0 | 0,0 | 0,0 |
| CO11(11) | 84 / Ende | 1,5 | 0,0 | 0,1 | 0,0 | 0,0 | 0,0 |
| | 174 / Anfang | -3,6 | -0,2 | 0,7 | 0,0 | -4,3 | 0,1 |
| | 174 / Ende | 3,6 | -0,1 | -0,9 | 0,0 | 4,3 | -0,1 |
| | 469 / Anfang | -1,7 | 0,0 | 0,1 | 0,0 | 0,0 | 0,0 |

## Fehlende Lasten

| Name | X [kN] | Y [kN] | Z [kN] | Mx [kNm] | My [kNm] | Mz [kNm] |
|---|---|---|---|---|---|---|
| CO11(28) | 0,0 | 0,0 | 0,0 | 0,0 | 0,0 | 0,0 |
| CO11(29) | 0,0 | 0,0 | 0,0 | 0,0 | 0,0 | 0,0 |
| CO11(30) | 0,0 | 0,0 | 0,0 | 0,0 | 0,0 | 0,0 |
| CO11(31) | 0,0 | 0,0 | 0,0 | 0,0 | 0,0 | 0,0 |
| CO11(32) | 0,0 | 0,0 | 0,0 | 0,0 | 0,0 | 0,0 |
| CO11(33) | 0,0 | 0,0 | 0,0 | 0,0 | 0,0 | 0,0 |
| CO11(34) | 0,0 | 0,0 | 0,0 | 0,0 | 0,0 | 0,0 |
| CO11(35) | 0,0 | 0,0 | 0,0 | 0,0 | 0,0 | 0,0 |
| CO11(36) | 0,0 | 0,0 | 0,0 | 0,0 | 0,0 | 0,0 |
| CO11(37) | 0,0 | 0,0 | 0,0 | 0,0 | 0,0 | 0,0 |
| CO9(12) | -0,9 | -1,7 | 0,0 | 0,1 | 0,0 | 0,0 |
| CO11(13) | 0,0 | 0,0 | 0,0 | 0,0 | 0,0 | 0,0 |
| CO11(14) | 0,0 | 0,0 | 0,0 | 0,0 | 0,0 | 0,0 |
| CO11(15) | 0,0 | 0,0 | 0,0 | 0,0 | 0,0 | 0,0 |
| CO11(16) | 0,0 | 0,0 | 0,0 | 0,0 | 0,0 | 0,0 |
| CO11(17) | 0,0 | 0,0 | 0,0 | 0,0 | 0,0 | 0,0 |
| CO11(21) | 0,0 | 0,0 | 0,0 | 0,0 | 0,0 | 0,0 |
| CO11(22) | 0,0 | 0,0 | 0,0 | 0,0 | 0,0 | 0,0 |
| CO11(23) | 0,0 | 0,0 | 0,0 | 0,0 | 0,0 | 0,0 |
| CO11(26) | 0,0 | 0,0 | 0,0 | 0,0 | 0,0 | 0,0 |
| CO11(27) | 0,0 | 0,0 | 0,0 | 0,0 | 0,0 | 0,0 |
| CO11(5) | 0,0 | 0,0 | 0,1 | 0,0 | 0,0 | 0,0 |
| CO11(7) | 0,0 | 0,0 | 0,0 | 0,0 | 0,0 | 0,0 |
| CO11(8) | 0,0 | 0,0 | 0,1 | 0,0 | 0,0 | 0,0 |
| CO11(11) | 0,0 | 0,0 | 0,0 | 0,0 | 0,0 | 0,0 |

# Nachweis

## Übersicht

| Name | Wert | Nachweisstatus |
|---|---|---|
| Berechnung | 100,0% | OK |
| Platten | 0,0 < 5,0% | OK |
| Lokale Verformung | 0,0 < 3% | OK |
| Schrauben | 2,5 < 100% | OK |
| Schweißnähte | 4,5 < 100% | OK |
| Beulen | Nicht berechnet | |

## Platten

| Name | Material | $t_p$ [mm] | Lasten | $\sigma_{Ed}$ [MPa] | $\varepsilon_{Pl}$ [%] | $\sigma_{c,Ed}$ [MPa] | Status |
|---|---|---|---|---|---|---|---|
| 84 | Baustahl S 355 | 4,0 | CO11(29) | 21,9 | 0,0 | 0,0 | OK |
| 174-bfl 1 | Baustahl S 355 | 9,8 | CO11(26) | 89,8 | 0,0 | 0,0 | OK |
| 174-tfl 1 | Baustahl S 355 | 9,8 | CO11(26) | 88,5 | 0,0 | 0,0 | OK |
| 174-w 1 | Baustahl S 355 | 6,2 | CO11(26) | 78,4 | 0,0 | 0,5 | OK |
| 469 | Baustahl S 355 | 4,0 | CO11(27) | 27,7 | 0,0 | 0,0 | OK |
| Stirnblech1a | S 355 | 10,0 | CO11(27) | 15,7 | 0,0 | 5,3 | OK |
| Stirnblech1b | S 355 | 10,0 | CO11(27) | 18,1 | 0,0 | 5,1 | OK |

### Bemessungsdaten

| Material | $f_y$ [MPa] | $\varepsilon_{lim}$ [%] |
|---|---|---|
| Baustahl S 355 | 355,0 | 5,0 |
| S 355 | 355,0 | 5,0 |

### Erläuterung von Symbolen

| | |
|---|---|
| $t_p$ | Plattendicke |
| $\sigma_{Ed}$ | Vergleichsspannung |
| $\varepsilon_{Pl}$ | Plastische Dehnung |
| $\sigma_{c,Ed}$ | Kontaktspannung |
| $f_y$ | Streckgrenze |
| $\varepsilon_{lim}$ | Grenzwert plastische Dehnung |

## Lokale Verformung

| Name | $d_0$ [mm] | Lasten | $\delta$ [mm] | $\delta_{lim}$ [mm] | $\delta/d_0$ [%] | Nachweisstatus |
|---|---|---|---|---|---|---|
| 84 | 80 | CO11(11) | 0 | 2 | 0,0 | OK |
| 469 | 80 | CO11(11) | 0 | 2 | 0,0 | OK |

### Erläuterung von Symbolen

| | |
|---|---|
| $d_0$ | Querschnittsgröße |
| $\delta$ | Lokale Verformung im Querschnitt |
| $\delta_{lim}$ | Zulässige Verformung |

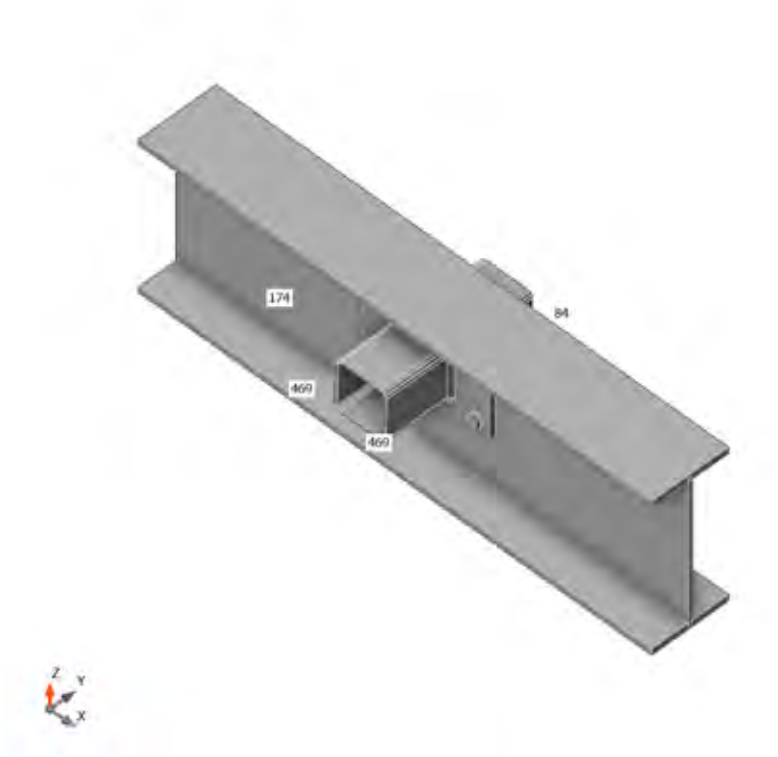


*Gesamt, CO11(29)*

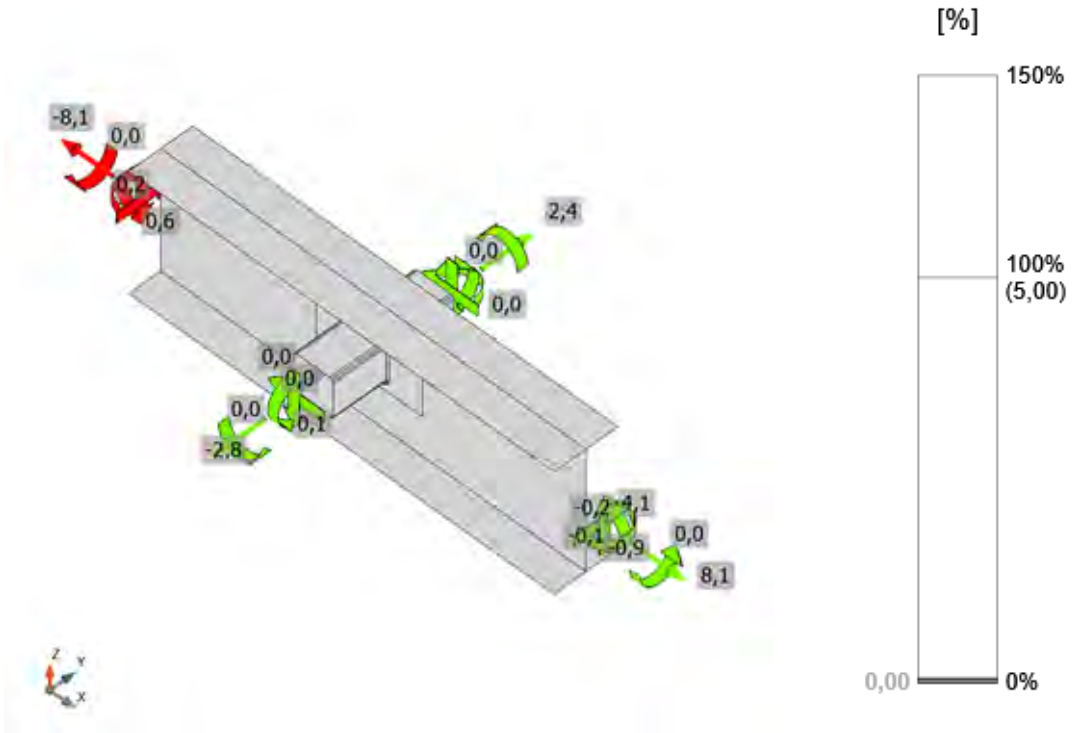


*Dehnung, CO11(29)*

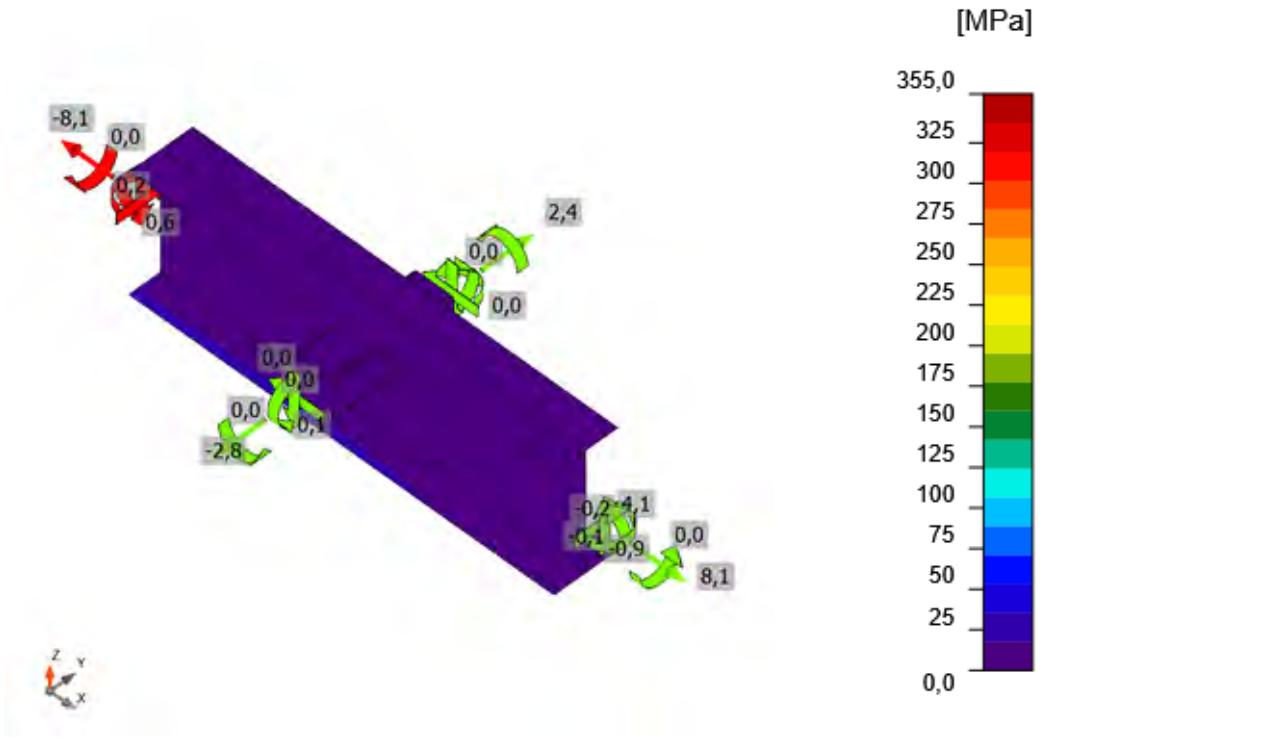


*Vergleichsspannung, CO11(29)*

## Schrauben

| Form | Position | Klasse | Lasten | $F_{t,Ed}$ [kN] | $F_{v,Ed}$ [kN] | $F_{b,Rd}$ [kN] | $Ut_t$ [%] | $Ut_s$ [%] | $Ut_{ts}$ [%] | Konstruktionsregeln | Status |
|---|---|---|---|---|---|---|---|---|---|---|---|
| 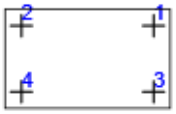 | B1 | M12 8.8 - 1 | CO11(27) | 1,2 | 0,2 | 72,9 | 2,5 | 0,7 | 2,5 | OK | OK |
| | B2 | M12 8.8 - 1 | CO11(29) | 1,2 | 0,1 | 72,9 | 2,5 | 0,3 | 2,0 | OK | OK |
| | B3 | M12 8.8 - 1 | CO11(29) | 1,2 | 0,1 | 72,9 | 2,5 | 0,2 | 2,0 | OK | OK |
| | B4 | M12 8.8 - 1 | CO11(29) | 1,2 | 0,1 | 72,9 | 2,5 | 0,3 | 2,1 | OK | OK |



### Bemessungsdaten

| Klasse | $F_{t,Rd}$ [kN] | $B_{p,Rd}$ [kN] | $F_{v,Rd}$ [kN] |
|---|---|---|---|
| M12 8.8 - 1 | 48,6 | 140,5 | 32,4 |

### Erläuterung von Symbolen

| | |
|---|---|
| $F_{t,Ed}$ | Zugkraft |
| $F_{v,Ed}$ | Resultierende der Schraubenscherkräfte Vy und Vz in Scherebenen |
| $F_{b,Rd}$ | Lochleibungstragfähigkeit der Platte nach EN 1993-1-8 Tab. 3.4 |
| $Ut_t$ | Ausnutzung unter Zug |
| $Ut_s$ | Ausnutzung unter Schub |
| $Ut_{ts}$ | Interaktion von Zug und Schub EN_1993-1-8 Tabelle 3.4 |
| $F_{t,Rd}$ | Zugtragfähigkeit der Schraube nach EN 1993-1-8 Tabelle 3.4 |
| $B_{p,Rd}$ | Durchstanztragfähigkeit nach EN 1993-1-8 Tabelle 3.4 |
| $F_{v,Rd}$ | Schertragfähigkeit der Schraube nach EN 1993-1-8 Tabelle 3.4 |

## Schweißnähte

| Position | Kante | $T_w$ [mm] | L [mm] | Lasten | $\sigma_{w,Ed}$ [MPa] | $\varepsilon_{Pl}$ [%] | $\sigma_{\perp}$ [MPa] | $\tau_{\perp}$ [MPa] | $\tau_{\parallel}$ [MPa] | Ut [%] | $Ut_c$ [%] | Konstruktionsregeln | Status |
|---|---|---|---|---|---|---|---|---|---|---|---|---|---|
| Stirnblech1a | 469 | ◢ 4,0 ◣ | 289 | CO11(27) | 17,3 | 0,0 | 3,0 | 9,5 | -2,4 | 4,0 | 4,0 | OK | OK |
| Stirnblech1b | 84 | ◢ 4,0 ◣ | 288 | CO11(29) | 13,7 | 0,0 | 2,5 | 7,6 | -1,6 | 3,1 | 3,1 | OK | OK |
| | | ◢ 4,0 ◣ | 289 | CO11(27) | 19,4 | 0,0 | 6,9 | -3,2 | -9,9 | 4,5 | 4,5 | OK | OK |
| | | ◢ 4,0 ◣ | 290 | CO11(29) | 13,4 | 0,0 | 5,0 | -2,3 | -6,8 | 3,1 | 3,1 | OK | OK |

**Bemessungsdaten**

| Material | $f_u$ [MPa] | $\beta_w$ [-] | $\sigma_{w,Rd}$ [MPa] | 0.9 σ [MPa] |
|---|---|---|---|---|
| S 355 | 490,0 | 0,90 | 435,6 | 352,8 |

**Erläuterung von Symbolen**

| | |
|---|---|
| $T_w$ | Nahtdicke a |
| L | Länge |
| $\sigma_{w,Ed}$ | Vergleichsspannung |
| $\varepsilon_{Pl}$ | Dehnung |
| $\sigma_{\perp}$ | Senkrechte Spannung |
| $\tau_{\perp}$ | Scherspannung senkrecht zur Schweißnahtachse |
| $\tau_{\parallel}$ | Scherspannung parallel zur Schweißnahtachse |
| Ut | Ausnutzung |
| $Ut_c$ | Schätzung der Schweißnahtkapazität |
| ◢ | Kehlnaht |
| $f_u$ | Grenzfestigkeit der Schweißnaht |
| $\beta_w$ | Korrelationsfaktor nach EN 1993-1-8 Tab. 4.1 |
| $\sigma_{w,Rd}$ | Tragfähigkeit der Schweißnaht |
| 0.9 σ | Senkrechter Spannungswiderstand - 0.9*fu / γM2 |

## Beulen

**Die Beulanalyse wurde nicht berechnet.**

## Normeinstellungen

| Position | Wert | Einheit | Bezug |
|---|---|---|---|
| Sicherheitsfaktor $\gamma_{M0}$ | 1,00 | - | EN 1993-1-1 – 6.1 |
| Sicherheitsfaktor $\gamma_{M1}$ | 1,00 | - | EN 1993-1-1 – 6.1 |
| Sicherheitsfaktor $\gamma_{M2}$ | 1,25 | - | EN 1993-1-1 – 6.1 |
| Sicherheitsfaktor $\gamma_{M3}$ | 1,25 | - | EN 1993-1-8 – Table 2.1 |
| Sicherheitsfaktor $\gamma_{C}$ | 1,50 | - | EN 1992-1-1 – 2.4.2.4 |
| Sicherheitsfaktor $\gamma_{Inst}$ | 1,20 | - | EN 1992-4 – Table 4.1 |
| Verbindungskoeffizient βj | 0,67 | - | EN 1993-1-8 – 6.2.5(7) |
| Wirksame Fläche - Einfluss der Netzgröße | 0,10 | - | |
| Reibungsbeiwert - Beton | 0,25 | - | EN 1993-1-8 |
| Reibungskoeffizient bei gleitfesten Verbindungen | 0,30 | - | EN 1993-1-8 – Table 3.7 |
| Plastische Dehnung - Grenzwert | 0,05 | - | EN 1993-1-5 |
| Konstruktionsregeln | Ja | | |
| Distance between bolts [d0] | 2,20 | - | EN 1993-1-8 – Table 3.3 |
| Distance between bolts and edge [d0] | 1,20 | - | EN 1993-1-8 – Table 3.3 |
| Nachweis der Tragfähigkeit bei Betonausbruch | Beide | | |
| Berechnetes αb für Lochleibungsnachweis anwenden. | Ja | | EN 1993-1-8 – Table 3.4 |
| Gerissener Beton | Ja | | EN 1992-4 |
| Überprüfen der lokalen Verformung | Ja | | |
| Lokale Verformung - Grenzwert | 0,03 | - | CIDECT DG 1, 3 – 1.1 |
| Geometrische Nichtlinearität (GMNA) | Ja | | Analyse mit großen Verformungen für Verbindungen mit Hohlprofilen |
| Ausgesteiftes System | Nein | | EN 1993-1-8 – 5.2.2.5 |

| | |
|---|---|
| **Projekt:** | **IdeaStatiCa-Stadion_Fazanerija_JK-6_BR - 79** |
| **Projektnummer:** | **Detajl D5-S** |
| **Autor:** | **mag. Igor Gorup dipl. ing.** |

## Projektdaten

| | |
|---|---|
| Projektname | IdeaStatiCa-Stadion_Fazanerija_JK-6_BR - 79 |
| Projektnummer | Detajl D5-S |
| Autor | mag. Igor Gorup dipl. ing. |
| Beschreibung | |
| Datum | 18.06.2025 |
| Norm | EN |

## Material

| | |
|---|---|
| Stahl | Baustahl S 355, Baustahl S 235, S 355 |

# Projektposition 79

## Bemessung

| | |
|---|---|
| Name | 79 |
| Beschreibung | |
| Berechnung | Spannung, Dehnung/ Lasten im Gleichgewicht |

### Bauteile

#### Geometrie

| Name | Querschnitt | β – Rotation [°] | Y - Rotation [°] | α - Rotation [°] | Abstand ex [mm] | Abstand ey [mm] | Abstand ez [mm] |
|---|---|---|---|---|---|---|---|
| 54 | 696 - HEA200 | 0,0 | 90,0 | -107,9 | 0 | 0 | 0 |
| 235 | 358 - IPE400 | 72,1 | 3,5 | 180,0 | -120 | 0 | 0 |
| 241 | 334 - CHS168.3/6.3 | -107,9 | -44,9 | -180,0 | 0 | 0 | 0 |
| 297 | 476 - RO101.6X4 | -9,0 | 0,0 | -180,0 | 0 | 0 | 0 |
| 299 | 476 - RO101.6X4 | -26,9 | 0,0 | -180,0 | 0 | 0 | 0 |

#### Auflager und Kräfte

| Name | Auflager | Kräfte in | X [mm] |
|---|---|---|---|
| 54 / anfang | N-Vy-Vz-Mx-My-Mz | Position | 0 |
| 235 / ende | | Position | 0 |
| 241 / ende | Mx-My-Mz | Schrauben | 0 |
| 297 / ende | | Position | 0 |
| 299 / ende | | Position | 0 |

### Querschnitte

| Name | Material |
|---|---|
| 696 - HEA200 | Baustahl S 355 |
| 358 - IPE400 | Baustahl S 355 |
| 334 - CHS168.3/6.3 | Baustahl S 355 |
| 476 - RO101.6X4 | Baustahl S 355 |

## Schrauben

| Name | Durchmesser [mm] | $f_y$ [MPa] | $f_u$ [MPa] | Bruttofläche [$mm^2$] |
|---|---|---|---|---|
| M24 10.9 | 24 | 900,0 | 1000,0 | 452 |
| M30 8.8 | 30 | 640,0 | 800,0 | 707 |
| M12 8.8 | 12 | 640,0 | 800,0 | 113 |

## Lasteinwirkungen (Kräfte im Gleichgewicht)

| Name | Bauteil | N [kN] | Vy [kN] | Vz [kN] | Mx [kNm] | My [kNm] | Mz [kNm] |
|---|---|---|---|---|---|---|---|
| CO11(45) | 54 / Anfang | -343,7 | 0,3 | 0,2 | 0,0 | 0,8 | -0,7 |
| | 235 / Ende | -370,5 | 0,3 | 0,6 | 0,7 | -0,7 | 0,1 |
| | 241 / Anfang | -523,1 | 0,0 | 0,3 | 0,0 | 0,0 | 0,0 |
| | 297 / Ende | -5,9 | 0,0 | 0,8 | -0,1 | 0,0 | 0,0 |
| | 299 / Anfang | 5,2 | 0,0 | 0,8 | 0,0 | 0,0 | 0,0 |
| CO9(46) | 54 / Anfang | -14,9 | 0,2 | -0,6 | 0,0 | -5,1 | -1,9 |
| | 235 / Ende | -7,9 | 0,2 | -8,8 | 1,9 | 5,1 | 0,1 |
| | 241 / Anfang | -9,4 | 0,0 | 0,0 | 0,0 | 0,0 | 0,0 |
| | 297 / Ende | 2,1 | 0,0 | 0,0 | 0,0 | 0,0 | 0,0 |
| | 299 / Anfang | -3,2 | 0,0 | 0,0 | 0,0 | 0,0 | 0,0 |
| CO11(47) | 54 / Anfang | -9,0 | 0,1 | 0,4 | 0,0 | 3,2 | -0,9 |
| | 235 / Ende | -16,8 | 0,2 | 4,6 | 0,9 | -3,2 | 0,1 |
| | 241 / Anfang | -23,1 | 0,0 | 0,4 | 0,0 | 0,0 | 0,0 |
| | 297 / Ende | -2,0 | 0,0 | 0,7 | 0,0 | 0,0 | 0,0 |
| | 299 / Anfang | 1,7 | 0,0 | 0,7 | 0,0 | 0,0 | 0,0 |
| CO11(48) | 54 / Anfang | -357,6 | -0,5 | -1,1 | 0,0 | -4,9 | 1,3 |
| | 235 / Ende | -376,7 | -0,2 | -7,9 | -1,3 | 5,0 | -0,1 |
| | 241 / Anfang | -531,2 | 0,0 | 0,3 | 0,0 | 0,0 | 0,0 |
| | 297 / Ende | 1,9 | 0,0 | 0,6 | -0,1 | 0,0 | 0,0 |
| | 299 / Anfang | -1,1 | 0,0 | 0,7 | 0,0 | 0,0 | 0,0 |
| CO11(49) | 54 / Anfang | -256,1 | -0,4 | -0,9 | 0,0 | -4,8 | 1,4 |
| | 235 / Ende | -267,1 | -0,1 | -7,8 | -1,4 | 4,8 | -0,1 |
| | 241 / Anfang | -377,1 | 0,0 | 0,3 | 0,0 | 0,0 | 0,0 |
| | 297 / Ende | 1,4 | 0,0 | 0,5 | 0,0 | 0,0 | 0,0 |
| | 299 / Anfang | -0,7 | 0,0 | 0,5 | 0,0 | 0,0 | 0,0 |
| CO11(50) | 54 / Anfang | -320,4 | 0,2 | 0,2 | 0,0 | 0,8 | -0,7 |
| | 235 / Ende | -345,2 | 0,3 | 0,9 | 0,7 | -0,7 | 0,1 |
| | 241 / Anfang | -487,5 | 0,0 | 0,3 | 0,0 | 0,0 | 0,0 |
| | 297 / Ende | -5,6 | 0,0 | 0,6 | -0,1 | 0,0 | 0,0 |
| | 299 / Anfang | 5,0 | 0,0 | 0,6 | 0,0 | 0,0 | 0,0 |
| CO11(51) | 54 / Anfang | -280,0 | -0,5 | -1,0 | 0,0 | -5,1 | 1,4 |
| | 235 / Ende | -292,6 | -0,2 | -8,4 | -1,4 | 5,1 | -0,1 |
| | 241 / Anfang | -412,9 | 0,0 | 0,4 | 0,0 | 0,0 | 0,0 |
| | 297 / Ende | 1,6 | 0,0 | 0,7 | 0,0 | 0,0 | 0,0 |
| | 299 / Anfang | -0,8 | 0,0 | 0,7 | 0,0 | 0,0 | 0,0 |
| CO11(52) | 54 / Anfang | -93,4 | 0,2 | 0,5 | 0,0 | 3,7 | -1,0 |
| | 235 / Ende | -108,0 | 0,2 | 5,3 | 1,0 | -3,7 | 0,1 |
| | 241 / Anfang | -151,6 | 0,0 | 0,4 | 0,0 | 0,0 | 0,0 |
| | 297 / Ende | -3,1 | 0,0 | 0,8 | 0,0 | 0,0 | 0,0 |
| | 299 / Anfang | 2,6 | 0,0 | 0,7 | 0,0 | 0,0 | 0,0 |
| CO11(53) | 54 / Anfang | -343,8 | 0,3 | 0,2 | 0,0 | 0,7 | -0,8 |
| | 235 / Ende | -370,6 | 0,3 | 0,6 | 0,8 | -0,7 | 0,1 |
| | 241 / Anfang | -523,1 | 0,0 | 0,3 | 0,0 | 0,0 | 0,0 |
| | 297 / Ende | -5,8 | 0,0 | 0,8 | -0,1 | 0,0 | 0,0 |
| | 299 / Anfang | 5,2 | 0,0 | 0,8 | 0,0 | 0,0 | 0,0 |
| CO11(54) | 54 / Anfang | 5,5 | 0,0 | 0,0 | 0,0 | 0,2 | 0,3 |
| | 235 / Ende | 3,8 | -0,4 | -0,5 | -0,3 | -0,2 | 0,0 |
| | 241 / Anfang | 6,9 | 0,0 | 0,3 | 0,0 | 0,0 | 0,0 |
| | 297 / Ende | 3,0 | 0,0 | 0,5 | 0,0 | 0,0 | 0,0 |
| | 299 / Anfang | -2,6 | 0,0 | 0,5 | 0,0 | 0,0 | 0,0 |
| CO11(37) | 54 / Anfang | 5,3 | 0,0 | 0,0 | 0,0 | 0,1 | 0,3 |
| | 235 / Ende | 3,7 | -0,4 | -0,6 | -0,3 | -0,1 | 0,0 |

| Name | Bauteil | N [kN] | Vy [kN] | Vz [kN] | Mx [kNm] | My [kNm] | Mz [kNm] |
|---|---|---|---|---|---|---|---|
| | 241 / Anfang | 6,8 | 0,0 | 0,3 | 0,0 | 0,0 | 0,0 |
| | 297 / Ende | 3,2 | 0,0 | 0,5 | 0,0 | 0,0 | 0,0 |
| | 299 / Anfang | -2,7 | 0,0 | 0,5 | 0,0 | 0,0 | 0,0 |
| CO11(42) | 54 / Anfang | -263,2 | -0,2 | -0,2 | 0,0 | -1,2 | 0,5 |
| | 235 / Ende | -282,1 | -0,4 | -2,5 | -0,5 | 1,3 | 0,0 |
| | 241 / Anfang | -396,5 | 0,0 | 0,4 | 0,0 | 0,0 | 0,0 |
| | 297 / Ende | 2,0 | 0,0 | 0,6 | 0,0 | 0,0 | 0,0 |
| | 299 / Anfang | -1,4 | 0,0 | 0,7 | 0,0 | 0,0 | 0,0 |
| CO11(43) | 54 / Anfang | -267,5 | 0,1 | 0,0 | 0,0 | -0,1 | -0,5 |
| | 235 / Ende | -286,8 | 0,4 | -0,7 | 0,5 | 0,1 | 0,0 |
| | 241 / Anfang | -405,6 | 0,0 | 0,4 | 0,0 | 0,0 | 0,0 |
| | 297 / Ende | -5,4 | 0,0 | 0,8 | -0,1 | 0,0 | 0,0 |
| | 299 / Anfang | 4,8 | 0,0 | 0,8 | 0,0 | 0,0 | 0,0 |
| CO11(44) | 54 / Anfang | -17,9 | 0,0 | 0,0 | 0,0 | 0,1 | 0,3 |
| | 235 / Ende | -21,3 | -0,4 | -0,7 | -0,3 | -0,1 | 0,0 |
| | 241 / Anfang | -28,5 | 0,0 | 0,4 | 0,0 | 0,0 | 0,0 |
| | 297 / Ende | 3,0 | 0,0 | 0,6 | 0,0 | 0,0 | 0,0 |
| | 299 / Anfang | -2,5 | 0,0 | 0,6 | 0,0 | 0,0 | 0,0 |
| CO11(28) | 54 / Anfang | 14,3 | 0,1 | 0,3 | 0,0 | 3,2 | -0,7 |
| | 235 / Ende | 8,4 | 0,2 | 4,9 | 0,7 | -3,2 | 0,1 |
| | 241 / Anfang | 12,3 | 0,0 | 0,3 | 0,0 | 0,0 | 0,0 |
| | 297 / Ende | -1,9 | 0,0 | 0,5 | 0,0 | 0,0 | 0,0 |
| | 299 / Anfang | 1,6 | 0,0 | 0,5 | 0,0 | 0,0 | 0,0 |
| CO11(29) | 54 / Anfang | -357,7 | -0,5 | -1,1 | 0,0 | -5,0 | 1,3 |
| | 235 / Ende | -376,7 | -0,2 | -8,0 | -1,3 | 5,1 | -0,1 |
| | 241 / Anfang | -531,2 | 0,0 | 0,3 | 0,0 | 0,0 | 0,0 |
| | 297 / Ende | 2,0 | 0,0 | 0,6 | -0,1 | 0,0 | 0,0 |
| | 299 / Anfang | -1,2 | 0,0 | 0,7 | 0,0 | 0,0 | 0,0 |
| CO11(32) | 54 / Anfang | -8,8 | 0,1 | 0,4 | 0,0 | 3,3 | -0,8 |
| | 235 / Ende | -16,7 | 0,2 | 4,7 | 0,8 | -3,3 | 0,1 |
| | 241 / Anfang | -23,0 | 0,0 | 0,4 | 0,0 | 0,0 | 0,0 |
| | 297 / Ende | -2,1 | 0,0 | 0,7 | 0,0 | 0,0 | 0,0 |
| | 299 / Anfang | 1,8 | 0,0 | 0,7 | 0,0 | 0,0 | 0,0 |
| CO11(34) | 54 / Anfang | -297,5 | 0,4 | 0,5 | 0,0 | 2,2 | -1,2 |
| | 235 / Ende | -323,6 | 0,2 | 2,7 | 1,2 | -2,1 | 0,1 |
| | 241 / Anfang | -456,2 | 0,0 | 0,4 | 0,0 | 0,0 | 0,0 |
| | 297 / Ende | -5,3 | 0,0 | 0,8 | -0,1 | 0,0 | 0,0 |
| | 299 / Anfang | 4,6 | 0,0 | 0,8 | 0,0 | 0,0 | 0,0 |
| CO11(18) | 54 / Anfang | -243,9 | 0,1 | 0,0 | 0,0 | 0,1 | -0,3 |
| | 235 / Ende | -261,4 | 0,4 | -0,3 | 0,3 | 0,0 | 0,0 |
| | 241 / Anfang | -369,9 | 0,0 | 0,3 | 0,0 | 0,0 | 0,0 |
| | 297 / Ende | -5,3 | 0,0 | 0,6 | -0,1 | 0,0 | 0,0 |
| | 299 / Anfang | 4,8 | 0,0 | 0,6 | 0,0 | 0,0 | 0,0 |
| CO11(19) | 54 / Anfang | -103,3 | -0,1 | 0,0 | 0,0 | 0,1 | 0,3 |
| | 235 / Ende | -112,9 | -0,5 | -0,7 | -0,3 | -0,1 | 0,0 |
| | 241 / Anfang | -157,6 | 0,0 | 0,4 | 0,0 | 0,0 | 0,0 |
| | 297 / Ende | 2,6 | 0,0 | 0,6 | 0,0 | 0,0 | 0,0 |
| | 299 / Anfang | -2,1 | 0,0 | 0,6 | 0,0 | 0,0 | 0,0 |
| CO11(20) | 54 / Anfang | -91,2 | 0,2 | 0,6 | 0,0 | 3,8 | -0,9 |
| | 235 / Ende | -105,5 | 0,2 | 5,8 | 0,9 | -3,8 | 0,1 |
| | 241 / Anfang | -148,3 | 0,0 | 0,3 | 0,0 | 0,0 | 0,0 |
| | 297 / Ende | -3,1 | 0,0 | 0,6 | 0,0 | 0,0 | 0,0 |
| | 299 / Anfang | 2,7 | 0,0 | 0,6 | 0,0 | 0,0 | 0,0 |
| CO11(23) | 54 / Anfang | -280,0 | -0,4 | -1,0 | 0,0 | -5,1 | 1,4 |

| Name | Bauteil | N [kN] | Vy [kN] | Vz [kN] | Mx [kNm] | My [kNm] | Mz [kNm] |
|---|---|---|---|---|---|---|---|
| | 235 / Ende | -292,6 | -0,2 | -8,5 | -1,4 | 5,2 | -0,1 |
| | 241 / Anfang | -413,0 | 0,0 | 0,4 | 0,0 | 0,0 | 0,0 |
| | 297 / Ende | 1,7 | 0,0 | 0,7 | 0,0 | 0,0 | 0,0 |
| | 299 / Anfang | -0,9 | 0,0 | 0,7 | 0,0 | 0,0 | 0,0 |
| CO11(24) | 54 / Anfang | -114,3 | 0,2 | 0,6 | 0,0 | 3,9 | -1,0 |
| | 235 / Ende | -130,7 | 0,2 | 5,6 | 1,0 | -3,9 | 0,1 |
| | 241 / Anfang | -183,7 | 0,0 | 0,4 | 0,0 | 0,0 | 0,0 |
| | 297 / Ende | -3,4 | 0,0 | 0,8 | 0,0 | 0,0 | 0,0 |
| | 299 / Anfang | 2,9 | 0,0 | 0,8 | 0,0 | 0,0 | 0,0 |
| CO11(27) | 54 / Anfang | -251,0 | 0,4 | 0,7 | 0,0 | 3,6 | -1,3 |
| | 235 / Ende | -276,5 | 0,2 | 4,9 | 1,3 | -3,6 | 0,1 |
| | 241 / Anfang | -389,4 | 0,0 | 0,4 | 0,0 | 0,0 | 0,0 |
| | 297 / Ende | -4,9 | 0,0 | 0,8 | 0,0 | 0,0 | 0,0 |
| | 299 / Anfang | 4,3 | 0,0 | 0,8 | 0,0 | 0,0 | 0,0 |
| CO11(3) | 54 / Anfang | -147,7 | -0,3 | -0,6 | 0,0 | -3,9 | 1,1 |
| | 235 / Ende | -152,0 | -0,2 | -6,8 | -1,1 | 4,0 | -0,1 |
| | 241 / Anfang | -214,7 | 0,0 | 0,3 | 0,0 | 0,0 | 0,0 |
| | 297 / Ende | 1,3 | 0,0 | 0,5 | 0,0 | 0,0 | 0,0 |
| | 299 / Anfang | -0,8 | 0,0 | 0,5 | 0,0 | 0,0 | 0,0 |
| CO11(5) | 54 / Anfang | -71,6 | -0,1 | -0,3 | 0,0 | -2,0 | 0,4 |
| | 235 / Ende | -74,4 | -0,4 | -3,9 | -0,4 | 2,0 | 0,0 |
| | 241 / Anfang | -104,2 | 0,0 | 0,3 | 0,0 | 0,0 | 0,0 |
| | 297 / Ende | 2,6 | 0,0 | 0,5 | 0,0 | 0,0 | 0,0 |
| | 299 / Anfang | -2,2 | 0,0 | 0,5 | 0,0 | 0,0 | 0,0 |
| CO11(11) | 54 / Anfang | -250,9 | 0,4 | 0,7 | 0,0 | 3,6 | -1,2 |
| | 235 / Ende | -276,4 | 0,2 | 5,0 | 1,2 | -3,6 | 0,1 |
| | 241 / Anfang | -389,3 | 0,0 | 0,4 | 0,0 | 0,0 | 0,0 |
| | 297 / Ende | -5,0 | 0,0 | 0,8 | 0,0 | 0,0 | 0,0 |
| | 299 / Anfang | 4,3 | 0,0 | 0,8 | 0,0 | 0,0 | 0,0 |

### Fehlende Lasten

| Name | X [kN] | Y [kN] | Z [kN] | Mx [kNm] | My [kNm] | Mz [kNm] |
|---|---|---|---|---|---|---|
| CO11(45) | -0,2 | -0,5 | 0,3 | 0,1 | 0,0 | 0,0 |
| CO9(46) | -1,1 | -1,3 | 0,0 | -1,0 | 0,3 | 0,0 |
| CO11(47) | 0,0 | 0,0 | -0,1 | 0,5 | -0,2 | 0,0 |
| CO11(48) | -0,1 | -0,6 | 0,7 | -0,9 | 0,3 | 0,0 |
| CO11(49) | 0,0 | -0,3 | 0,4 | -0,9 | 0,3 | 0,0 |
| CO11(50) | -0,2 | -0,4 | 0,3 | 0,1 | 0,0 | 0,0 |
| CO11(51) | 0,0 | -0,4 | 0,4 | -1,0 | 0,3 | 0,0 |
| CO11(52) | -0,1 | -0,1 | -0,1 | 0,6 | -0,2 | 0,0 |
| CO11(53) | -0,2 | -0,5 | 0,3 | 0,1 | 0,0 | 0,0 |
| CO11(54) | 0,0 | 0,0 | 0,1 | 0,0 | 0,0 | 0,0 |
| CO11(37) | 0,0 | 0,0 | 0,1 | -0,1 | 0,0 | 0,0 |
| CO11(42) | -0,1 | -0,3 | 0,4 | -0,3 | 0,1 | 0,0 |
| CO11(43) | -0,1 | -0,3 | 0,1 | -0,1 | 0,0 | 0,0 |
| CO11(44) | 0,0 | 0,0 | 0,1 | -0,1 | 0,0 | 0,0 |
| CO11(28) | 0,0 | 0,0 | -0,1 | 0,6 | -0,2 | 0,0 |
| CO11(29) | -0,1 | -0,6 | 0,7 | -0,9 | 0,3 | 0,0 |
| CO11(32) | 0,0 | 0,0 | -0,1 | 0,5 | -0,2 | 0,0 |
| CO11(34) | -0,2 | -0,4 | 0,2 | 0,3 | -0,1 | 0,0 |
| CO11(18) | -0,1 | -0,3 | 0,1 | 0,0 | 0,0 | 0,0 |
| CO11(19) | 0,0 | -0,1 | 0,2 | -0,1 | 0,0 | -0,1 |
| CO11(20) | 0,0 | 0,0 | 0,0 | 0,7 | -0,2 | 0,0 |
| CO11(23) | 0,0 | -0,4 | 0,5 | -1,0 | 0,3 | 0,0 |
| CO11(24) | -0,1 | -0,1 | -0,1 | 0,6 | -0,2 | 0,0 |
| CO11(27) | -0,2 | -0,3 | 0,1 | 0,6 | -0,2 | 0,0 |
| CO11(3) | 0,0 | -0,1 | 0,2 | -0,8 | 0,3 | 0,0 |
| CO11(5) | 0,0 | 0,0 | 0,1 | -0,4 | 0,1 | 0,0 |
| CO11(11) | -0,2 | -0,3 | 0,1 | 0,6 | -0,2 | 0,0 |

## Nachweis

### Übersicht

| Name | Wert | Nachweisstatus |
|---|---|---|
| Berechnung | 100,0% | OK |
| Platten | 0,3 < 5,0% | OK |
| Lokale Verformung | 0,1 < 3% | OK |
| Schrauben | 56,1 < 100% | OK |
| Schweißnähte | 98,0 < 100% | OK |
| Beulen | Nicht berechnet | |

## Platten

| Name | Material | $t_p$ [mm] | Lasten | $\sigma_{Ed}$ [MPa] | $\varepsilon_{Pl}$ [%] | $\sigma_{c,Ed}$ [MPa] | Status |
|---|---|---|---|---|---|---|---|
| 54-bfl 1 | Baustahl S 355 | 10,0 | CO11(53) | 141,5 | 0,0 | 0,0 | OK |
| 54-tfl 1 | Baustahl S 355 | 10,0 | CO11(48) | 182,8 | 0,0 | 0,0 | OK |
| 54-w 1 | Baustahl S 355 | 6,5 | CO11(48) | 218,6 | 0,0 | 0,0 | OK |
| 235-bfl 1 | Baustahl S 355 | 13,5 | CO11(48) | 93,4 | 0,0 | 0,0 | OK |
| 235-tfl 1 | Baustahl S 355 | 13,5 | CO11(48) | 355,1 | 0,1 | 28,9 | OK |
| 235-w 1 | Baustahl S 355 | 8,6 | CO11(48) | 222,9 | 0,0 | 2,5 | OK |
| 241 | Baustahl S 355 | 6,3 | CO11(45) | 355,6 | 0,3 | 0,0 | OK |
| 297 | Baustahl S 355 | 4,0 | CO9(46) | 17,2 | 0,0 | 0,0 | OK |
| 299 | Baustahl S 355 | 4,0 | CO9(46) | 18,4 | 0,0 | 0,0 | OK |
| Stirnblech1 | S 355 | 25,0 | CO11(48) | 247,8 | 0,0 | 46,3 | OK |
| Steifenblech2 | S 355 | 15,0 | CO11(53) | 266,6 | 0,0 | 0,0 | OK |
| Verbindungsblech1a | S 355 | 20,0 | CO11(48) | 147,3 | 0,0 | 8,3 | OK |
| Verbindungsblech1b | S 355 | 20,0 | CO11(48) | 149,5 | 0,0 | 6,4 | OK |
| Verbindungsblech1c | S 355 | 20,0 | CO11(48) | 278,4 | 0,0 | 8,7 | OK |
| Rippe1a | S 355 | 15,0 | CO11(48) | 303,3 | 0,0 | 0,0 | OK |
| Rippe1b | S 355 | 15,0 | CO11(53) | 244,3 | 0,0 | 0,0 | OK |
| Stirnblech2a | S 355 | 10,0 | CO9(46) | 42,9 | 0,0 | 10,1 | OK |
| Stirnblech2b | S 355 | 10,0 | CO9(46) | 44,0 | 0,0 | 10,8 | OK |

**Bemessungsdaten**

| Material | $f_y$ [MPa] | $\varepsilon_{lim}$ [%] |
|---|---|---|
| Baustahl S 355 | 355,0 | 5,0 |
| S 355 | 355,0 | 5,0 |

**Erläuterung von Symbolen**

| | |
|---|---|
| $t_p$ | Plattendicke |
| $\sigma_{Ed}$ | Vergleichsspannung |
| $\varepsilon_{Pl}$ | Plastische Dehnung |
| $\sigma_{c,Ed}$ | Kontaktspannung |
| $f_y$ | Streckgrenze |
| $\varepsilon_{lim}$ | Grenzwert plastische Dehnung |

## Lokale Verformung

| Name | $d_0$ [mm] | Lasten | $\delta$ [mm] | $\delta_{lim}$ [mm] | $\delta/d_0$ [%] | Nachweisstatus |
|---|---|---|---|---|---|---|
| 241 | 168 | CO11(48) | 0 | 5 | 0,1 | OK |
| 297 | 102 | CO11(11) | 0 | 3 | 0,0 | OK |
| 299 | 102 | CO11(11) | 0 | 3 | 0,0 | OK |

**Erläuterung von Symbolen**

| | |
|---|---|
| $d_0$ | Querschnittsgröße |
| $\delta$ | Lokale Verformung im Querschnitt |
| $\delta_{lim}$ | Zulässige Verformung |

*Gesamt, CO11(45)*

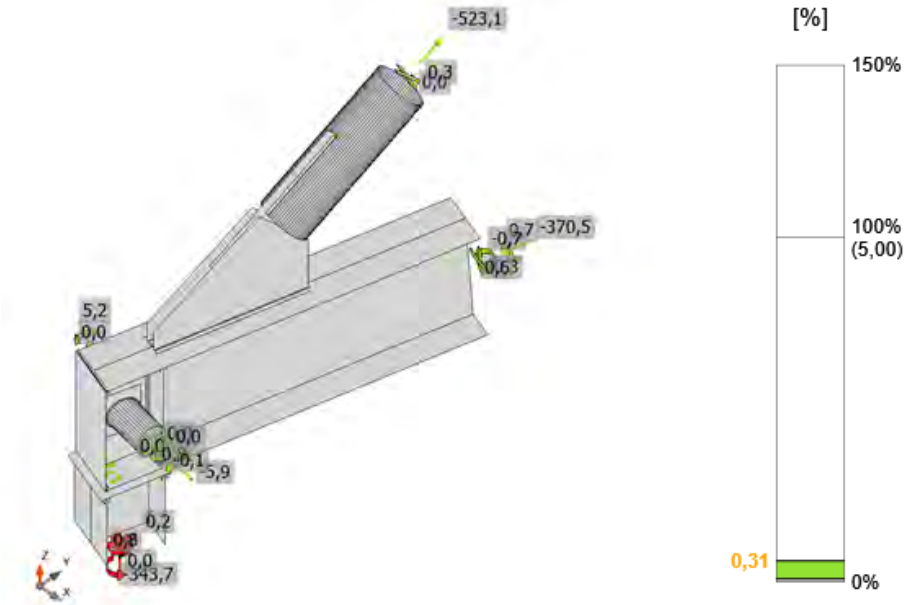


*Dehnung, CO11(45)*

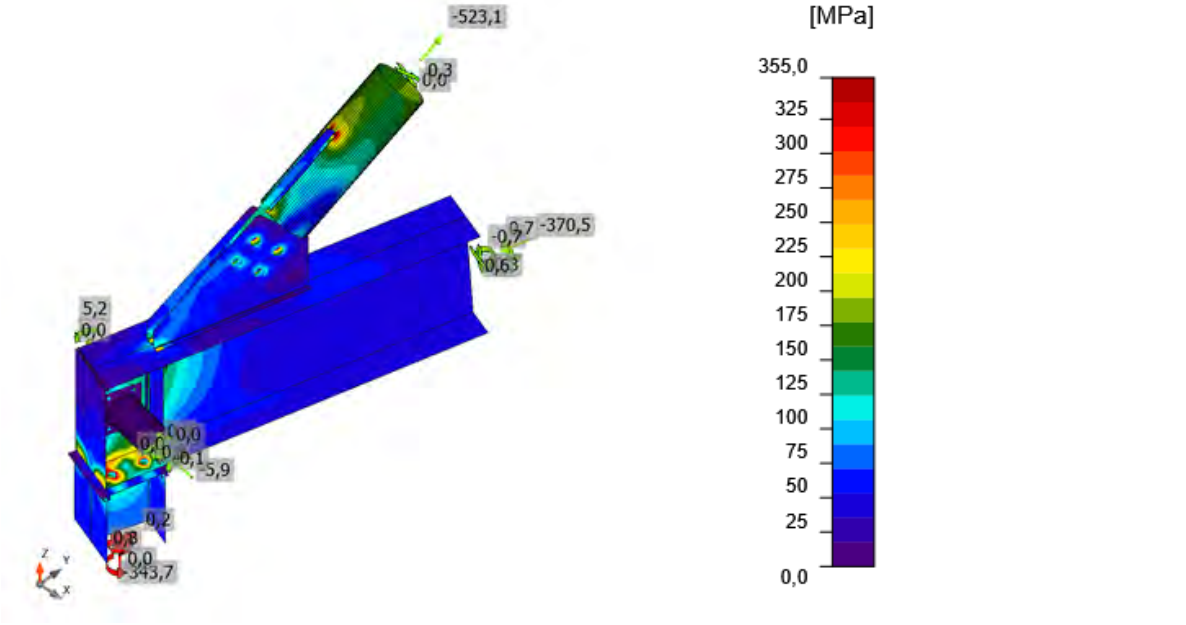


*Vergleichsspannung, CO11(45)*

## Schrauben

| Form | Position | Klasse | Lasten | $F_{t,Ed}$ [kN] | $F_{v,Ed}$ [kN] | $F_{b,Rd}$ [kN] | $Ut_t$ [%] | $Ut_s$ [%] | $Ut_{ts}$ [%] | Konstruktionsregeln | Status |
|---|---|---|---|---|---|---|---|---|---|---|---|
| 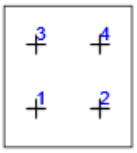 | B1 | M24 10.9 - 1 | CO11(53) | 109,9 | 3,5 | 95,4 | 43,2 | 3,6 | 33,3 | OK | OK |
| | B2 | M24 10.9 - 1 | CO11(45) | 102,2 | 3,8 | 95,7 | 40,2 | 3,9 | 31,4 | OK | OK |
| | B3 | M24 10.9 - 1 | CO11(48) | 142,5 | 7,5 | 317,5 | 56,1 | 5,3 | 45,4 | OK | OK |
| | B4 | M24 10.9 - 1 | CO11(53) | 116,2 | 7,0 | 317,5 | 45,7 | 5,0 | 37,6 | OK | OK |
| | B5 | M30 8.8 - 2 | CO11(45) | 1,3 | 65,8 | 297,0 | 0,4 | 44,3 | 30,9 | OK | OK |
| | B6 | M30 8.8 - 2 | CO11(45) | 15,5 | 69,3 | 328,2 | 4,8 | 41,7 | 35,6 | OK | OK |
| | B7 | M30 8.8 - 2 | CO11(29) | 1,4 | 66,7 | 297,0 | 0,4 | 44,7 | 31,3 | OK | OK |
| | B8 | M30 8.8 - 2 | CO11(29) | 17,0 | 69,2 | 328,2 | 5,3 | 41,6 | 35,9 | OK | OK |
| 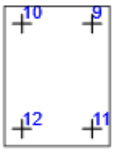 | B9 | M12 8.8 - 3 | CO11(48) | 1,3 | 1,3 | 101,1 | 2,7 | 4,1 | 6,0 | OK | OK |
| | B10 | M12 8.8 - 3 | CO9(46) | 1,5 | 0,4 | 60,3 | 3,2 | 1,1 | 3,4 | OK | OK |
| | B11 | M12 8.8 - 3 | CO11(48) | 1,1 | 0,8 | 101,1 | 2,4 | 2,4 | 4,1 | OK | OK |
| | B12 | M12 8.8 - 3 | CO11(48) | 1,3 | 0,9 | 60,3 | 2,7 | 2,7 | 4,6 | OK | OK |

**Bemessungsdaten**

| Klasse | $F_{t,Rd}$ [kN] | $B_{p,Rd}$ [kN] | $F_{v,Rd}$ [kN] |
|---|---|---|---|
| M24 10.9 - 1 | 254,2 | 379,0 | 141,2 |
| M30 8.8 - 2 | 323,1 | 715,6 | 215,4 |
| M12 8.8 - 3 | 48,6 | 140,5 | 32,4 |

**Erläuterung von Symbolen**

| | |
|---|---|
| $F_{t,Ed}$ | Zugkraft |
| $F_{v,Ed}$ | Resultierende der Schraubenscherkräfte Vy und Vz in Scherebenen |
| $F_{b,Rd}$ | Lochleibungstragfähigkeit der Platte nach EN 1993-1-8 Tab. 3.4 |
| $Ut_t$ | Ausnutzung unter Zug |
| $Ut_s$ | Ausnutzung unter Schub |
| $Ut_{ts}$ | Interaktion von Zug und Schub EN_1993-1-8 Tabelle 3.4 |
| $F_{t,Rd}$ | Zugtragfähigkeit der Schraube nach EN 1993-1-8 Tabelle 3.4 |
| $B_{p,Rd}$ | Durchstanztragfähigkeit nach EN 1993-1-8 Tabelle 3.4 |
| $F_{v,Rd}$ | Schertragfähigkeit der Schraube nach EN 1993-1-8 Tabelle 3.4 |

## Schweißnähte

| Position | Kante | $T_w$ [mm] | L [mm] | Lasten | $\sigma_{w,Ed}$ [MPa] | $\varepsilon_{Pl}$ [%] | $\sigma_{\perp}$ [MPa] | $\tau_{\perp}$ [MPa] | $\tau_{\parallel}$ [MPa] | Ut [%] | $Ut_c$ [%] | Konstruktionsregeln | Status |
|---|---|---|---|---|---|---|---|---|---|---|---|---|---|
| Stirnblech1 | 54-bfl 1 | ◢ 8,0 ◣ | 198 | CO11(53) | 88,2 | 0,0 | 41,2 | 30,9 | -32,7 | 20,2 | 13,1 | OK | OK |
| | | ◢ 8,0 ◣ | 198 | CO11(53) | 56,5 | 0,0 | 11,5 | -29,0 | -13,4 | 13,0 | 9,2 | OK | OK |
| Stirnblech1 | 54-tfl 1 | ◢ 8,0 ◣ | 198 | CO11(48) | 74,5 | 0,0 | 20,6 | 36,2 | 19,9 | 17,1 | 10,3 | OK | OK |
| | | ◢ 8,0 ◣ | 198 | CO11(48) | 123,3 | 0,0 | 53,8 | -41,2 | 49,0 | 28,3 | 17,3 | OK | OK |
| Stirnblech1 | 54-w 1 | ◢ 6,0 ◣ | 179 | CO11(48) | 170,7 | 0,0 | 86,0 | 81,7 | -23,8 | 39,2 | 25,0 | OK | OK |
| | | ◢ 6,0 ◣ | 179 | CO11(29) | 167,1 | 0,0 | 79,7 | -83,7 | 13,5 | 38,4 | 23,2 | OK | OK |
| Steifenblech2 | 235-bfl 1 | ◢ 6,0 ◣ | 180 | CO9(46) | 37,9 | 0,0 | -30,5 | -12,8 | 1,8 | 8,7 | 8,1 | OK | OK |
| | | ◢ 6,0 ◣ | 180 | CO9(46) | 24,9 | 0,0 | 16,9 | 10,4 | 1,9 | 5,7 | 5,7 | OK | OK |
| Steifenblech2 | 235-tfl 1 | ◢ 6,0 ◣ | 179 | CO11(53) | 154,9 | 0,0 | -8,6 | 54,7 | 70,6 | 35,6 | 26,6 | OK | OK |
| | | ◢ 6,0 ◣ | 179 | CO11(53) | 164,7 | 0,0 | 115,3 | -0,2 | 67,9 | 39,8 | 29,1 | OK | OK |
| Steifenblech2 | 235-w 1 | ◢ 6,0 | 385 | CO11(45) | 124,7 | 0,0 | -32,7 | -31,4 | -62,0 | 28,6 | 21,0 | OK | OK |
| 235-bfl 1 | Verbindungsblech1a | ◢ 10,0 ◣ | 479 | CO11(48) | 229,1 | 0,0 | 73,6 | 89,1 | -88,1 | 52,6 | 27,9 | OK | OK |
| | | ◢ 10,0 ◣ | 479 | CO11(48) | 257,6 | 0,0 | 101,4 | -85,8 | 106,5 | 59,1 | 30,9 | OK | OK |
| 235-bfl 1 | Verbindungsblech1b | ◢ 10,0 ◣ | 479 | CO11(53) | 249,4 | 0,0 | 97,2 | 83,1 | -103,4 | 57,3 | 30,2 | OK | OK |
| | | ◢ 10,0 ◣ | 479 | CO11(29) | 227,4 | 0,0 | 76,0 | -86,0 | 88,9 | 52,2 | 27,8 | OK | OK |
| Verbindungsblech1c | 241-arc 15 | ◢ 8,0 | 298 | CO11(45) | 427,0 | 0,1 | -70,5 | 5,3 | -243,1 | 98,0 | 54,6 | OK | OK |
| Verbindungsblech1c | 241-arc 18 | ◢ 8,0 | 298 | CO11(45) | 427,0 | 0,1 | -70,6 | 5,4 | 243,1 | 98,0 | 65,1 | OK | OK |
| Verbindungsblech1c | 241-arc 47 | ◢ 8,0 | 298 | CO11(29) | 427,0 | 0,1 | -72,2 | 4,0 | -242,9 | 98,0 | 54,5 | OK | OK |
| Verbindungsblech1c | 241-arc 50 | ◢ 8,0 | 298 | CO11(29) | 427,0 | 0,1 | -72,7 | 5,9 | 242,9 | 98,0 | 64,8 | OK | OK |
| 235-bfl 1 | Rippe1a | ◢ 6,0 ◣ | 65 | CO11(48) | 231,4 | 0,0 | 134,6 | 107,3 | 17,5 | 53,1 | 35,4 | OK | OK |
| | | ◢ 6,0 ◣ | 65 | CO11(53) | 119,9 | 0,0 | 29,1 | -60,8 | -28,5 | 27,5 | 17,7 | OK | OK |
| 235-w 1 | Rippe1a | ◢ 6,0 ◣ | 330 | CO11(48) | 114,4 | 0,0 | -25,0 | -7,3 | -64,1 | 26,3 | 18,7 | OK | OK |
| | | ◢ 6,0 ◣ | 330 | CO11(53) | 77,8 | 0,0 | 23,2 | -3,6 | 42,7 | 17,9 | 11,6 | OK | OK |

| Position | Kante | $T_w$ [mm] | L [mm] | Lasten | $\sigma_{w,Ed}$ [MPa] | $\varepsilon_{Pl}$ [%] | $\sigma_{\perp}$ [MPa] | $\tau_{\perp}$ [MPa] | $\tau_{\parallel}$ [MPa] | Ut [%] | $Ut_c$ [%] | Konstruktionsregeln | Status |
|---|---|---|---|---|---|---|---|---|---|---|---|---|---|
| 235-tfl 1 | Rippe1a | ◢ 6,0 ◣ | 65 | CO11(48) | 82,0 | 0,0 | -44,0 | 25,8 | -30,5 | 18,8 | 15,2 | OK | OK |
| | | ◢ 6,0 ◣ | 65 | CO11(48) | 349,6 | 0,0 | 182,3 | -163,5 | -54,3 | 80,3 | 61,2 | OK | OK |
| 235-bfl 1 | Rippe1b | ◢ 6,0 ◣ | 65 | CO11(48) | 128,1 | 0,0 | 33,6 | 65,1 | 29,2 | 29,4 | 18,4 | OK | OK |
| | | ◢ 6,0 ◣ | 65 | CO11(53) | 218,2 | 0,0 | 127,4 | -101,2 | -15,1 | 50,1 | 33,2 | OK | OK |
| 235-w 1 | Rippe1b | ◢ 6,0 ◣ | 330 | CO11(48) | 85,6 | 0,0 | 24,0 | 3,3 | -47,4 | 19,7 | 12,7 | OK | OK |
| | | ◢ 6,0 ◣ | 330 | CO11(53) | 102,0 | 0,0 | -24,8 | 6,8 | 56,7 | 23,4 | 15,0 | OK | OK |
| 235-tfl 1 | Rippe1b | ◢ 6,0 ◣ | 65 | CO11(53) | 292,9 | 0,0 | 154,6 | 137,6 | 41,3 | 67,3 | 49,9 | OK | OK |
| | | ◢ 6,0 ◣ | 65 | CO11(53) | 63,8 | 0,0 | -34,9 | -20,3 | 23,2 | 14,6 | 12,6 | OK | OK |
| Stirnblech2a | 297 | ◢ 4,0 | 308 | CO9(46) | 24,1 | 0,0 | 13,0 | -11,5 | 1,8 | 5,5 | 5,5 | OK | OK |
| Stirnblech2b | 299 | ◢ 4,0 | 308 | CO9(46) | 26,3 | 0,0 | 14,5 | -12,5 | 2,1 | 6,0 | 5,8 | OK | OK |

**Bemessungsdaten**

| Material | $f_u$ [MPa] | $\beta_w$ [-] | $\sigma_{w,Rd}$ [MPa] | 0.9 σ [MPa] |
|---|---|---|---|---|
| S 355 | 490,0 | 0,90 | 435,6 | 352,8 |

**Erläuterung von Symbolen**

| | |
|---|---|
| $T_w$ | Nahtdicke a |
| L | Länge |
| $\sigma_{w,Ed}$ | Vergleichsspannung |
| $\varepsilon_{Pl}$ | Dehnung |
| $\sigma_{\perp}$ | Senkrechte Spannung |
| $\tau_{\perp}$ | Scherspannung senkrecht zur Schweißnahtachse |
| $\tau_{\parallel}$ | Scherspannung parallel zur Schweißnahtachse |
| Ut | Ausnutzung |
| $Ut_c$ | Schätzung der Schweißnahtkapazität |
| ◢ | Kehlnaht |
| $f_u$ | Grenzfestigkeit der Schweißnaht |
| $\beta_w$ | Korrelationsfaktor nach EN 1993-1-8 Tab. 4.1 |
| $\sigma_{w,Rd}$ | Tragfähigkeit der Schweißnaht |
| 0.9 σ | Senkrechter Spannungswiderstand - 0.9*fu / γM2 |

## Beulen

**Die Beulanalyse wurde nicht berechnet.**

## Normeinstellungen

| Position | Wert | Einheit | Bezug |
|---|---|---|---|
| Sicherheitsfaktor $\gamma_{M0}$ | 1,00 | - | EN 1993-1-1 – 6.1 |
| Sicherheitsfaktor $\gamma_{M1}$ | 1,00 | - | EN 1993-1-1 – 6.1 |
| Sicherheitsfaktor $\gamma_{M2}$ | 1,25 | - | EN 1993-1-1 – 6.1 |
| Sicherheitsfaktor $\gamma_{M3}$ | 1,25 | - | EN 1993-1-8 – Table 2.1 |
| Sicherheitsfaktor $\gamma_{C}$ | 1,50 | - | EN 1992-1-1 – 2.4.2.4 |
| Sicherheitsfaktor $\gamma_{Inst}$ | 1,20 | - | EN 1992-4 – Table 4.1 |
| Verbindungskoeffizient βj | 0,67 | - | EN 1993-1-8 – 6.2.5(7) |
| Wirksame Fläche - Einfluss der Netzgröße | 0,10 | - | |
| Reibungsbeiwert - Beton | 0,25 | - | EN 1993-1-8 |
| Reibungskoeffizient bei gleitfesten Verbindungen | 0,30 | - | EN 1993-1-8 – Table 3.7 |
| Plastische Dehnung - Grenzwert | 0,05 | - | EN 1993-1-5 |
| Konstruktionsregeln | Ja | | |
| Distance between bolts [d0] | 2,20 | - | EN 1993-1-8 – Table 3.3 |
| Distance between bolts and edge [d0] | 1,20 | - | EN 1993-1-8 – Table 3.3 |
| Nachweis der Tragfähigkeit bei Betonausbruch | Beide | | |
| Berechnetes αb für Lochleibungsnachweis anwenden. | Ja | | EN 1993-1-8 – Table 3.4 |
| Gerissener Beton | Ja | | EN 1992-4 |
| Überprüfen der lokalen Verformung | Ja | | |
| Lokale Verformung - Grenzwert | 0,03 | - | CIDECT DG 1, 3 – 1.1 |
| Geometrische Nichtlinearität (GMNA) | Ja | | Analyse mit großen Verformungen für Verbindungen mit Hohlprofilen |
| Ausgesteiftes System | Nein | | EN 1993-1-8 – 5.2.2.5 |

| | | | |
|---|---|---|---|
| Podjetje: | RAZPON d.o.o. | Stran: | 1 |
| Naslov: | Tehnološki park 20, 1000 Ljubljana | Projektant: | Igor Gorup |
| Telefon I Faks: | +38616203366 \| | E-mail: | igor.gorup@razpon.si |
| Projektiranje: | Beton - 11. Juni 2025 | Datum: | 25.06.2025 |
| Točka pritrjevanja: | Sidranje S1 | | |

**Komentar projektanta:**

# 1 Izračun detajla sidranja

## 1.1 Vhodni podatki

| | |
|---|---|
| **Tip in velikost sidra:** | **HIT-RE 500 V3 + HAS Meter 8.8 M30** |
| Povratna doba (življenjska doba v letih): | 50 |
| Številka artikla: | 2390172 HAS 8.8 M30x1000 (element) / 2123403 HIT-RE 500 V3 (kemično sidro) |

**Potresni/polnilni set ali podobna rešitev za zapolnitev vrzeli**

| | |
|---|---|
| Specification text: | Hilti AM 8.8 Gewindestange with HIT-RE 500 V3 Injektionssystem with 600 mm embedment hef, M30, Stahl galvanisiert, Hammerbohren installation per ETA 16/0143, mit verfülltem Ringspalt mittels des Hilti Dynamic/Verfüllsets oder einer anderen geeigneten Methode, |
| Efektivna sidrna globina: | $h_{ef,act}$ = 600,0 mm ($h_{ef,limit}$ = - mm) |
| Material: | 8.8 |
| Tehnična ocena artikla: | ETA 16/0143 |
| Izdano I Veljavno: | 14.05.2019 \| - |
| Kontrola: | SOFA based on EN 1992-4 and fib bulletin 58, Chemical |
| Vgradnja z nadvišanjem: | $e_b$ = 0,0 mm (brez nadvišanja); t = 50,0 mm |
| Ležišča pločevina[CBFEM] : | $l_x$ x $l_y$ x t = 600,0 mm x 620,0 mm x 50,0 mm; |
| Profil: | IPB/HEB, IPB 260 / HE 260 B; (L x W x T x FT) = 260,0 mm x 260,0 mm x 10,0 mm x 17,5 mm |
| Osnovni material: | nerazpokan beton, C25/30, $f_{c,cyl}$ = 25,00 N/mm$^2$; h =1.000,0 mm, Temp. kratko./dolgo.: 0/0 °C, delni varnostni faktor materiala $\gamma_c$ = 1,500 |
| **Vgradnja:** | **Hammer drilled hole, Pogoji vgradnje: Suho** |
| Ojačitev: | razmak med armaturo < 150 mm (any Ø) or < 100 mm (Ø <= 10 mm)<br>z vzdolžno armaturo po robu betona d >= 12,0 [mm] + gosta mreža (armatura, obešala) s <= 100,0 [mm]<br>Prisotna je armatura za kontrolo cepitve betona v skladu s standardom EN 1992-4, 7.2.1.7 (2) b) 2) |

[CBFEM] - Izračun sider temelji na metodi končnih elementov z upoštevanjem posameznih komponent (CBFEM)

Vhodne podatke in rezultate je potrebno preveriti glede skladnosti z obstoječimi pogoji in verodostojnosti!
PROFIS Engineering ( c ) 2003-2025 Hilti AG, FL-9494 Schaan Hilti je registrirana blagovna znamka Hilti AG, Schaan

| | | | |
|---|---|---|---|
| Podjetje: | RAZPON d.o.o. | Stran: | 2 |
| Naslov: | Tehnološki park 20, 1000 Ljubljana | Projektant: | Igor Gorup |
| Telefon I Faks: | +38616203366 \| | E-mail: | igor.gorup@razpon.si |
| Projektiranje: | Beton - 11. Juni 2025 | Datum: | 25.06.2025 |
| Točka pritrjevanja: | Sidranje S1 | | |

**Geometrija [mm] & Obtežba [kN, kNm]**

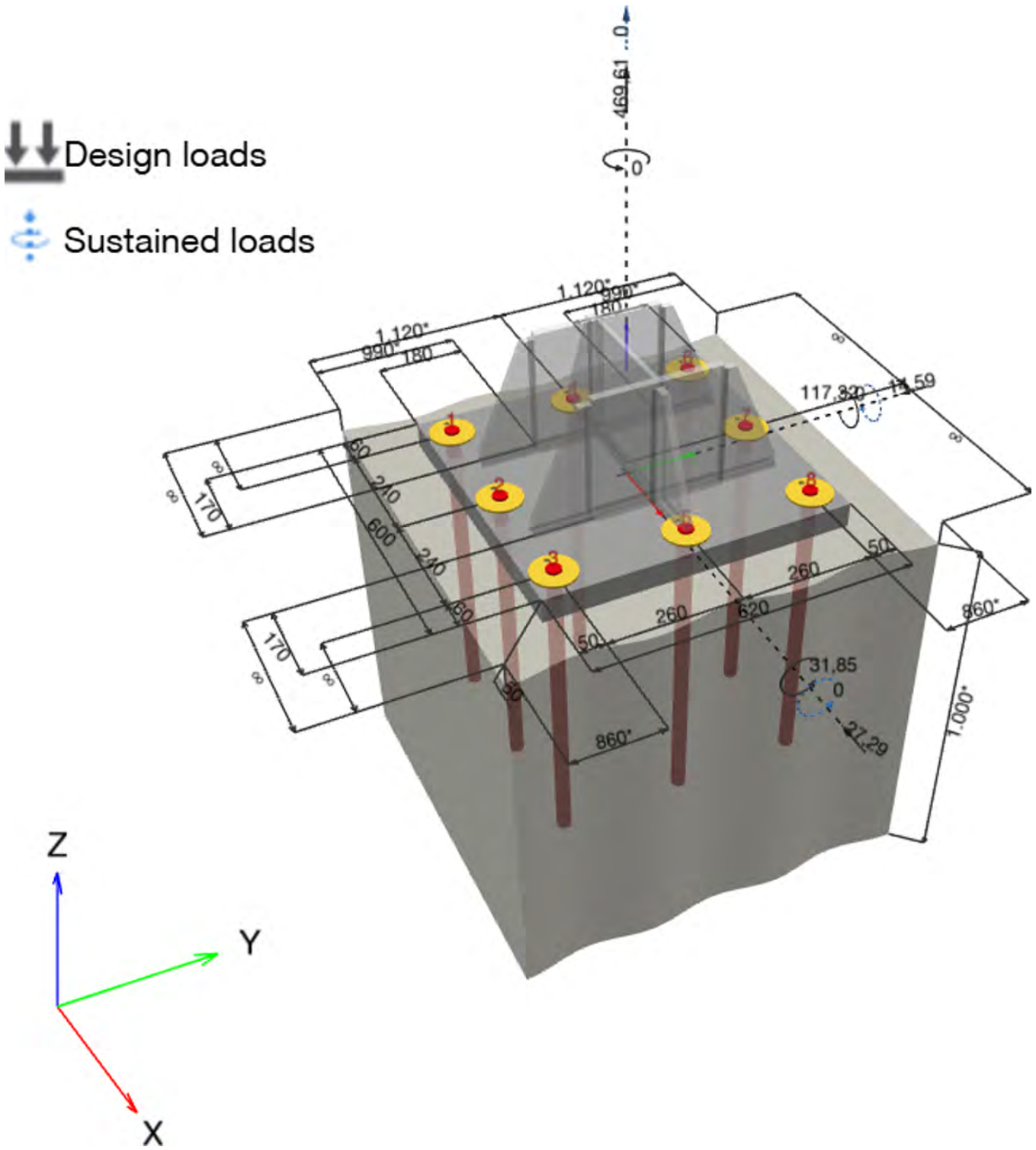


Vhodne podatke in rezultate je potrebno preveriti glede skladnosti z obstoječimi pogoji in verodostojnosti!
PROFIS Engineering ( c ) 2003-2025 Hilti AG, FL-9494 Schaan Hilti je registrirana blagovna znamka Hilti AG, Schaan

| | | | |
|---|---|---|---|
| Podjetje: | RAZPON d.o.o. | Stran: | 3 |
| Naslov: | Tehnološki park 20, 1000 Ljubljana | Projektant: | Igor Gorup |
| Telefon I Faks: | +38616203366 \| | E-mail: | igor.gorup@razpon.si |
| Projektiranje: | Beton - 11. Juni 2025 | Datum: | 25.06.2025 |
| Točka pritrjevanja: | Sidranje S1 | | |

### 1.1.1 Obtežna kombinacija

| Primer | Opis | Sile [kN] / Momenti [kNm] | Potresno | požar | Izkoriščenost [%] |
|---|---|---|---|---|---|
| 1 | Kombination 1 | N = 469,610; $V_x$ = −27,290; $V_y$ = −14,590; $M_x$ = 31,850; $M_y$ = −117,320; $M_z$ = 0,000; $N_{sus}$ = 0,000; $M_{x,sus}$ = 0,000; $M_{y,sus}$ = 0,000; | ne | ne | 81 |

### 1.2 Obtežni primer/Rezultante sil v sidru

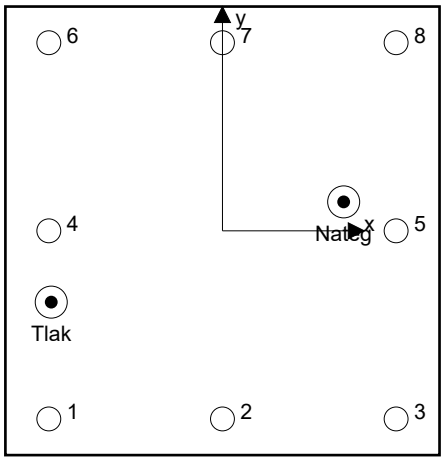


**Reakcije v sidru [kN]**
Natezna sila: (+Nateg, -Tlak)

| Sidro | Natezna sila | Strižna sila | Strižna sila x | Strižna sila y |
|---|---|---|---|---|
| 1 | −0,005 | 3,652 | −3,153 | −1,843 |
| 2 | 56,667 | 3,307 | −3,053 | −1,272 |
| 3 | 71,350 | 3,465 | −3,379 | −0,768 |
| 4 | −0,004 | 3,974 | −3,549 | −1,788 |
| 5 | 222,345 | 4,900 | −4,567 | −1,776 |
| 6 | 0,000 | 3,551 | −3,082 | −1,763 |
| 7 | 114,081 | 3,962 | −3,053 | −2,525 |
| 8 | 100,923 | 4,482 | −3,455 | −2,855 |

Resulting tension force in (x/y)=(167,5/40,0): 565,357 [kN]
Resulting compression force in (x/y)=(−236,6/−98,5): 97,858 [kN]

Sile v sidru so izračunane po metodi končnih elementov z upoštevanjem posameznih komponent (CBFEM)

Vhodne podatke in rezultate je potrebno preveriti glede skladnosti z obstoječimi pogoji in verodostojnosti!
PROFIS Engineering ( c ) 2003-2025 Hilti AG, FL-9494 Schaan Hilti je registrirana blagovna znamka Hilti AG, Schaan

| | | | |
|---|---|---|---|
| Podjetje: | RAZPON d.o.o. | Stran: | 4 |
| Naslov: | Tehnološki park 20, 1000 Ljubljana | Projektant: | Igor Gorup |
| Telefon I Faks: | +38616203366 \| | E-mail: | igor.gorup@razpon.si |
| Projektiranje: | Beton - 11. Juni 2025 | Datum: | 25.06.2025 |
| Točka pritrjevanja: | Sidranje S1 | | |

### 1.3 Natezna obremenitev (EN 1992-4, Točka 7.2.1)

| | Obtežba [kN] | Kapaciteta [kN] | Izkoriščenost $\beta_N$ [%] | Status |
|---|---|---|---|---|
| Nosilnost jekla* | 222,345 | 299,200 | 75 | OK |
| Kombinacija izvleka sidra in betonskega konusa** | 565,367 | 982,704 | 58 | OK |
| Porušitev po konusu betona** | 565,367 | 699,701 | 81 | OK |
| Cepitev betona** | 565,367 | 838,530 | 68 | OK |

*najbolj obremenjeno sidro **skupina sider (natezno obremenjena sidra)

#### 1.3.1 Nosilnost jekla

$$N_{Ed} \leq N_{Rd,s} = \frac{N_{Rk,s}}{\gamma_{Ms}}$$ EN 1992-4, Tabela 7.1

| $N_{Rk,s}$ [kN] | $\gamma_{Ms}$ | $N_{Rd,s}$ [kN] | $N_{Ed}$ [kN] |
|---|---|---|---|
| 448,800 | 1,500 | 299,200 | 222,345 |

Vhodne podatke in rezultate je potrebno preveriti glede skladnosti z obstoječimi pogoji in verodostojnosti!
PROFIS Engineering ( c ) 2003-2025 Hilti AG, FL-9494 Schaan Hilti je registrirana blagovna znamka Hilti AG, Schaan

| | | | |
|---|---|---|---|
| Podjetje: | RAZPON d.o.o. | Stran: | 5 |
| Naslov: | Tehnološki park 20, 1000 Ljubljana | Projektant: | Igor Gorup |
| Telefon I Faks: | +38616203366 \| | E-mail: | igor.gorup@razpon.si |
| Projektiranje: | Beton - 11. Juni 2025 | Datum: | 25.06.2025 |
| Točka pritrjevanja: | Sidranje S1 | | |

### 1.3.2 Kombinacija izvleka sidra in betonskega konusa

$N_{Ed} \le N_{Rd,p} = \frac{N_{Rk,p}}{\gamma_{Mp}}$ EN 1992-4, Tabela 7.1

$N_{Rk,p} = N^0_{Rk,p} \cdot \frac{A_{p,N}}{A^0_{p,N}} \cdot \psi_{g,Np} \cdot \psi_{s,Np} \cdot \psi_{re,Np} \cdot \psi_{ec1,Np} \cdot \psi_{ec2,Np}$ EN 1992-4, Enačba (7.13)

$N^0_{Rk,p} = \psi_{sus} \cdot \tau_{Rk} \cdot \pi \cdot d \cdot h_{ef}$ EN 1992-4, Enačba (7.14)

$\psi_{sus} = 1$ EN 1992-4, Enačba (7.14a)

$s_{cr,Np} = 7{,}3 \cdot d \cdot \sqrt{\psi_{sus} \cdot \tau_{Rk}} \le 3 \cdot h_{ef}$ EN 1992-4, Enačba (7.15)

$\psi_{g,Np} = \psi^0_{g,Np} - \left(\frac{s}{s_{cr,Np}}\right)^{0,5} \cdot \left(\psi^0_{g,Np} - 1\right) \ge 1{,}00$ EN 1992-4, Enačba (7.17)

$\psi^0_{g,Np} = \sqrt{n} - (\sqrt{n} - 1) \cdot \left(\frac{\tau_{Rk}}{\tau_{Rk,c}}\right)^{1,5} \ge 1{,}00$ EN 1992-4, Enačba (7.18)

$\tau_{Rk,c} = \frac{k_3}{\pi \cdot d} \cdot \sqrt{h_{ef} \cdot f_{ck}}$ EN 1992-4, Enačba (7.19)

$\psi_{s,Np} = 0{,}7 + 0{,}3 \cdot \frac{c}{c_{cr,Np}} \le 1{,}00$ EN 1992-4, Enačba (7.20)

$\psi_{ec1,Np} = \frac{1}{1 + \left(\frac{2 \cdot e_{c1,N}}{s_{cr,Np}}\right)} \le 1{,}00$ EN 1992-4, Enačba (7.21)

$\psi_{ec2,Np} = \frac{1}{1 + \left(\frac{2 \cdot e_{c2,N}}{s_{cr,Np}}\right)} \le 1{,}00$ EN 1992-4, Enačba (7.21)

| $A_{p,N}$ [mm²] | $A^0_{p,N}$ [mm²] | $\tau_{Rk,ucr,20}$ [N/mm²] | $s_{cr,Np}$ [mm] | $c_{cr,Np}$ [mm] | $c_{min}$ [mm] | $f_{c,cyl}$ [N/mm²] |
|---|---|---|---|---|---|---|
| 1.419.015 | 671.454 | 14,00 | 819,4 | 409,7 | 860,0 | 25,00 |

| $\psi_c$ | $\tau_{Rk,ucr}$ [N/mm²] | $k_3$ | $\tau_{Rk,c}$ [N/mm²] | $\psi^0_{g,Np}$ | $\psi_{g,Np}$ |
|---|---|---|---|---|---|
| 1,023 | 14,32 | 11,000 | 14,29 | 1,000 | 1,000 |

| $e_{c1,N}$ [mm] | $\psi_{ec1,Np}$ | $e_{c2,N}$ [mm] | $\psi_{ec2,Np}$ | $\psi_{s,Np}$ | $\psi_{re,Np}$ |
|---|---|---|---|---|---|
| 23,5 | 0,946 | 40,0 | 0,911 | 1,000 | 1,000 |

| $\psi^0_{sus}$ | $\alpha_{sus}$ | $\psi_{sus}$ |
|---|---|---|
| 0,880 | 0,000 | 1,000 |

| $N^0_{Rk,p}$ [kN] | $N_{Rk,p}$ [kN] | $\gamma_{Mp}$ | $N_{Rd,p}$ [kN] | $N_{Ed}$ [kN] |
|---|---|---|---|---|
| 809,546 | 1.474,056 | 1,500 | 982,704 | 565,367 |

| ID skupine sider |
|---|
| 2, 3, 5, 7, 8 |

Vhodne podatke in rezultate je potrebno preveriti glede skladnosti z obstoječimi pogoji in verodostojnosti!
PROFIS Engineering ( c ) 2003-2025 Hilti AG, FL-9494 Schaan Hilti je registrirana blagovna znamka Hilti AG, Schaan

| | | | |
|---|---|---|---|
| Podjetje: | RAZPON d.o.o. | Stran: | 6 |
| Naslov: | Tehnološki park 20, 1000 Ljubljana | Projektant: | Igor Gorup |
| Telefon I Faks: | +38616203366 \| | E-mail: | igor.gorup@razpon.si |
| Projektiranje: | Beton - 11. Juni 2025 | Datum: | 25.06.2025 |
| Točka pritrjevanja: | Sidranje S1 | | |

### 1.3.3 Porušitev po konusu betona

$$N_{Ed} \le N_{Rd,c} = \frac{N_{Rk,c}}{\gamma_{Mc}}$$ EN 1992-4, Tabela 7.1

$$N_{Rk,c} = N^0_{Rk,c} \cdot \frac{A_{c,N}}{A^0_{c,N}} \cdot \psi_{s,N} \cdot \psi_{re,N} \cdot \psi_{ec1,N} \cdot \psi_{ec2,N} \cdot \psi_{M,N}$$ EN 1992-4, Enačba (7.1)

$$N^0_{Rk,c} = k_1 \cdot \sqrt{f_{ck}} \cdot h_{ef}^{1,5}$$ EN 1992-4, Enačba (7.2)

$$A^0_{c,N} = s_{cr,N} \cdot s_{cr,N}$$ EN 1992-4, Enačba (7.3)

$$\psi_{s,N} = 0{,}7 + 0{,}3 \cdot \frac{c}{c_{cr,N}} \le 1{,}00$$ EN 1992-4, Enačba (7.4)

$$\psi_{ec1,N} = \frac{1}{1 + \left(\frac{2 \cdot e_{N,1}}{s_{cr,N}}\right)} \le 1{,}00$$ EN 1992-4, Enačba (7.6)

$$\psi_{ec2,N} = \frac{1}{1 + \left(\frac{2 \cdot e_{N,2}}{s_{cr,N}}\right)} \le 1{,}00$$ EN 1992-4, Enačba (7.6)

$$\psi_{M,N} = 1$$ EN 1992-4, Enačba (7.7)

| $A_{c,N}$ [mm²] | $A^0_{c,N}$ [mm²] | $c_{cr,N}$ [mm] | $s_{cr,N}$ [mm] | $f_{c,cyl}$ [N/mm²] |
|---|---|---|---|---|
| 4.569.600 | 3.240.000 | 900,0 | 1.800,0 | 25,00 |

| $e_{c1,N}$ [mm] | $\psi_{ec1,N}$ | $e_{c2,N}$ [mm] | $\psi_{ec2,N}$ | $\psi_{s,N}$ | $\psi_{re,N}$ | z [mm] |
|---|---|---|---|---|---|---|
| 23,5 | 0,975 | 40,0 | 0,957 | 0,987 | 1,000 | 427,2 |

| $\psi_{M,N}$ | $k_1$ | $N^0_{Rk,c}$ [kN] | $\gamma_{Mc}$ | $N_{Rd,c}$ [kN] | $N_{Ed}$ [kN] |
|---|---|---|---|---|---|
| 1,000 | 11,000 | 808,332 | 1,500 | 699,701 | 565,367 |

| ID skupine sider |
|---|
| 2, 3, 5, 7, 8 |

Vhodne podatke in rezultate je potrebno preveriti glede skladnosti z obstoječimi pogoji in verodostojnosti!
PROFIS Engineering ( c ) 2003-2025 Hilti AG, FL-9494 Schaan Hilti je registrirana blagovna znamka Hilti AG, Schaan

| | | | |
|---|---|---|---|
| Podjetje: | RAZPON d.o.o. | Stran: | 7 |
| Naslov: | Tehnološki park 20, 1000 Ljubljana | Projektant: | Igor Gorup |
| Telefon I Faks: | +38616203366 \| | E-mail: | igor.gorup@razpon.si |
| Projektiranje: | Beton - 11. Juni 2025 | Datum: | 25.06.2025 |
| Točka pritrjevanja: | Sidranje S1 | | |

### 1.3.4 Cepitev betona

$N_{Ed} \le N_{Rd,sp} = \frac{N_{Rk,sp}}{\gamma_{Msp}}$ EN 1992-4, Tabela 7.1

$N_{Rk,sp} = N^0_{Rk,sp} \cdot \frac{A_{c,N}}{A^0_{c,N}} \cdot \psi_{s,N} \cdot \psi_{re,N} \cdot \psi_{ec1,N} \cdot \psi_{ec2,N} \cdot \psi_{h,sp}$ EN 1992-4, Enačba (7.23)

$N^0_{Rk,sp} = \min\left(N^0_{Rk,p}, N^0_{Rk,c}\right)$

$A^0_{c,N} = s_{cr,sp} \cdot s_{cr,sp}$ EN 1992-4, Enačba (7.3)

$\psi_{s,N} = 0{,}7 + 0{,}3 \cdot \frac{c}{c_{cr,sp}} \le 1{,}00$ EN 1992-4, Enačba (7.4)

$\psi_{ec1,N} = \frac{1}{1 + \left(\frac{2 \cdot e_{N,1}}{s_{cr,sp}}\right)} \le 1{,}00$ EN 1992-4, Enačba (7.6)

$\psi_{ec2,N} = \frac{1}{1 + \left(\frac{2 \cdot e_{N,2}}{s_{cr,sp}}\right)} \le 1{,}00$ EN 1992-4, Enačba (7.6)

$\psi_{h,sp} = \left(\frac{h}{h_{min}}\right)^{2/3} \le \max\left\{1; \left(\frac{h_{ef} + 1{,}5 \cdot c_1}{h_{min}}\right)^{2/3}\right\} \le 2{,}00$ EN 1992-4, Enačba (7.24)

| $A_{c,N}$ [mm²] | $A^0_{c,N}$ [mm²] | $c_{cr,sp}$ [mm] | $s_{cr,sp}$ [mm] | $h_{min}$ [mm] | $\psi_{h,sp}$ | $f_{c,cyl}$ [N/mm²] |
|---|---|---|---|---|---|---|
| 4.838.400 | 3.686.400 | 960,0 | 1.920,0 | 670,0 | 1,306 | 25,00 |

| $e_{c1,N}$ [mm] | $\psi_{ec1,N}$ | $e_{c2,N}$ [mm] | $\psi_{ec2,N}$ | $\psi_{s,N}$ | $\psi_{re,N}$ | $k_1$ |
|---|---|---|---|---|---|---|
| 23,5 | 0,976 | 40,0 | 0,960 | 0,969 | 1,000 | 11,000 |

| $N^0_{Rk,sp}$ [kN] | $\gamma_{Msp}$ | $N_{Rd,sp}$ [kN] | $N_{Ed}$ [kN] |
|---|---|---|---|
| 808,332 | 1,500 | 838,530 | 565,367 |

| ID skupine sider |
|---|
| 2, 3, 5, 7, 8 |

Vhodne podatke in rezultate je potrebno preveriti glede skladnosti z obstoječimi pogoji in verodostojnosti!
PROFIS Engineering ( c ) 2003-2025 Hilti AG, FL-9494 Schaan Hilti je registrirana blagovna znamka Hilti AG, Schaan

| | | | |
|---|---|---|---|
| Podjetje: | RAZPON d.o.o. | Stran: | 8 |
| Naslov: | Tehnološki park 20, 1000 Ljubljana | Projektant: | Igor Gorup |
| Telefon I Faks: | +38616203366 \| | E-mail: | igor.gorup@razpon.si |
| Projektiranje: | Beton - 11. Juni 2025 | Datum: | 25.06.2025 |
| Točka pritrjevanja: | Sidranje S1 | | |

### 1.4 Strižna obremenitev (EN 1992-4, Točka 7.2.2)

| | Obtežba [kN] | Kapaciteta [kN] | Izkoriščenost $\beta_V$ [%] | Status |
|---|---|---|---|---|
| Nosilnost jekla (brez nadvišanja)* | 4,900 | 179,520 | 3 | OK |
| Porušitev po jeklu (z nadvišanjem)* | N/A | N/A | N/A | N/A |
| Nosilnost na iztrga betona** | 30,945 | 1.676,242 | 2 | OK |
| Porušitev po robu betona v smeri y-** | 17,459 | 496,337 | 4 | OK |

*najbolj obremenjeno sidro **skupina sider (relevantna sidra)
When the input edge distance is set to "infinity", edge breakout verification is not performed in that direction

#### 1.4.1 Nosilnost jekla (brez nadvišanja)

$V_{Ed} \le V_{Rd,s} = \frac{V_{Rk,s}}{\gamma_{Ms}}$ EN 1992-4, Tabela 7.2

$V_{Rk,s} = k_7 \cdot V^0_{Rk,s}$ EN 1992-4, Enačba (7.35)

| $V^0_{Rk,s}$ [kN] | $k_7$ | $V_{Rk,s}$ [kN] | $\gamma_{Ms}$ | $V_{Rd,s}$ [kN] | $V_{Ed}$ [kN] |
|---|---|---|---|---|---|
| 224,400 | 1,000 | 224,400 | 1,250 | 179,520 | 4,900 |

#### 1.4.2 Nosilnost na iztrga betona (merodajna nosilnost betona)

$V_{Ed} \le V_{Rd,cp} = \frac{V_{Rk,cp}}{\gamma_{Mc,p}}$ EN 1992-4, Tabela 7.2

$V_{Rk,cp} = k_8 \cdot \min\{N_{Rk,c}; N_{Rk,p}\}$ EN 1992-4, Enačba (7.39c)

$N_{Rk,c} = N^0_{Rk,c} \cdot \frac{A_{c,N}}{A^0_{c,N}} \cdot \psi_{s,N} \cdot \psi_{re,N} \cdot \psi_{ec1,N} \cdot \psi_{ec2,N} \cdot \psi_{M,N}$ EN 1992-4, Enačba (7.1)

$N^0_{Rk,c} = k_1 \cdot \sqrt{f_{ck}} \cdot h_{ef}^{1,5}$ EN 1992-4, Enačba (7.2)

$A^0_{c,N} = s_{cr,N} \cdot s_{cr,N}$ EN 1992-4, Enačba (7.3)

$\psi_{s,N} = 0,7 + 0,3 \cdot \frac{c}{c_{cr,N}} \le 1,00$ EN 1992-4, Enačba (7.4)

$\psi_{ec1,N} = \frac{1}{1 + \left(\frac{2 \cdot e_{V,1}}{s_{cr,N}}\right)} \le 1,00$ EN 1992-4, Enačba (7.6)

$\psi_{ec2,N} = \frac{1}{1 + \left(\frac{2 \cdot e_{V,2}}{s_{cr,N}}\right)} \le 1,00$ EN 1992-4, Enačba (7.6)

$\psi_{M,N} = 1$ EN 1992-4, Enačba (7.7)

| $A_{c,N}$ [mm²] | $A^0_{c,N}$ [mm²] | $c_{cr,N}$ [mm] | $s_{cr,N}$ [mm] | $k_8$ | $f_{c,cyl}$ [N/mm²] |
|---|---|---|---|---|---|
| 5.107.200 | 3.240.000 | 900,0 | 1.800,0 | 2,000 | 25,00 |

| $e_{c1,V}$ [mm] | $\psi_{ec1,N}$ | $e_{c2,V}$ [mm] | $\psi_{ec2,N}$ | $\psi_{s,N}$ | $\psi_{re,N}$ | $\psi_{M,N}$ |
|---|---|---|---|---|---|---|
| 0,0 | 1,000 | 0,0 | 1,000 | 0,987 | 1,000 | 1,000 |

| $k_1$ | $N^0_{Rk,c}$ [kN] | $\gamma_{Mc,p}$ | $V_{Rd,cp}$ [kN] | $V_{Ed}$ [kN] |
|---|---|---|---|---|
| 11,000 | 808,332 | 1,500 | 1.676,242 | 30,945 |

| ID skupine sider |
|---|
| 1-8 |

Vhodne podatke in rezultate je potrebno preveriti glede skladnosti z obstoječimi pogoji in verodostojnosti!
PROFIS Engineering ( c ) 2003-2025 Hilti AG, FL-9494 Schaan Hilti je registrirana blagovna znamka Hilti AG, Schaan

| | | | |
|---|---|---|---|
| Podjetje: | RAZPON d.o.o. | Stran: | 9 |
| Naslov: | Tehnološki park 20, 1000 Ljubljana | Projektant: | Igor Gorup |
| Telefon I Faks: | +38616203366 \| | E-mail: | igor.gorup@razpon.si |
| Projektiranje: | Beton - 11. Juni 2025 | Datum: | 25.06.2025 |
| Točka pritrjevanja: | Sidranje S1 | | |

### 1.4.3 Porušitev po robu betona v smeri y-

$$V_{Ed} \le V_{Rd,c} = \frac{V_{Rk,c}}{\gamma_{Mc}}$$ EN 1992-4, Tabela 7.2

$$V_{Rk,c} = k_T \cdot V^0_{Rk,c} \cdot \frac{A_{c,V}}{A^0_{c,V}} \cdot \psi_{s,V} \cdot \psi_{h,V} \cdot \psi_{\alpha,V} \cdot \psi_{ec,V} \cdot \psi_{re,V}$$ EN 1992-4, Enačba (7.40)

$$V^0_{Rk,c} = k_9 \cdot d_{nom}^{\alpha} \cdot l_f^{\beta} \cdot \sqrt{f_{ck}} \cdot c_1^{1,5}$$ EN 1992-4, Enačba (7.41)

$$\alpha = 0,1 \cdot \left(\frac{l_f}{c_1}\right)^{0,5}$$ EN 1992-4, Enačba (7.42)

$$\beta = 0,1 \cdot \left(\frac{d_{nom}}{c_1}\right)^{0,2}$$ EN 1992-4, Enačba (7.43)

$$A^0_{c,V} = 4,5 \cdot c_1^2$$ EN 1992-4, Enačba (7.44)

$$\psi_{s,V} = 0,7 + 0,3 \cdot \frac{c_2}{1,5 \cdot c_1} \le 1,00$$ EN 1992-4, Enačba (7.45)

$$\psi_{h,V} = \left(\frac{1,5 \cdot c_1}{h}\right)^{0,5} \ge 1,00$$ EN 1992-4, Enačba (7.46)

$$\psi_{ec,V} = \frac{1}{1 + \left(\frac{2 \cdot e_V}{3 \cdot c_1}\right)} \le 1,00$$ EN 1992-4, Enačba (7.47)

$$\psi_{90°,V} = 4.0 \cdot k_4 \cdot \left(\frac{n_2 \cdot d_{nom}^2 \cdot f_{ck}}{V_{Rk,c,\perp}}\right)^{0,5} \le 4,00$$ fib Bulletin 58, Eq. (10.2-5f$_1$)

$$\psi_{\alpha,V} = \sqrt{\frac{1}{(\cos \alpha_V)^2 + \left(\frac{\sin \alpha_V}{\psi_{90°,V}}\right)^2}} \ge 1,00$$ fib Bulletin 58, Eq. (10.2-5f))

| $l_f$ [mm] | $d_{nom}$ [mm] | $k_9$ | $\alpha$ | $\beta$ | $f_{c,cyl}$ [N/mm$^2$] | $c_1$ [mm] |
|---|---|---|---|---|---|---|
| 240,0 | 30,00 | 2,400 | 0,042 | 0,046 | 25,00 | 1.380,0 |

| $A_{c,V}$ [mm$^2$] | $A^0_{c,V}$ [mm$^2$] | $\psi_{s,V}$ | $\psi_{h,V}$ | $e_{c,V}$ [mm] | $\psi_{ec,V}$ |
|---|---|---|---|---|---|
| 4.620.000 | 8.569.800 | 1,000 | 1,439 | 15,0 | 0,993 |

| $k_4$ | $n_2$ | $V_{Rk,c,\perp}$ [kN] | $\psi_{90°,V}$ | $\alpha_V$ [°] | $\psi_{\alpha,V}$ | $\psi_{re,V}$ |
|---|---|---|---|---|---|---|
| 1,0 | 3 | 704,367 | 1,238 | 33,31 | 1,057 | 1,000 |

| $V^0_{Rk,c}$ [kN] | $k_T$ | $\gamma_{Mc}$ | $V_{Rd,c}$ [kN] | $V_{Ed}$ [kN] |
|---|---|---|---|---|
| 914,700 | 1,0 | 1,500 | 496,337 | 17,459 |

| ID skupine sider |
|---|
| 1-8 |

When the input edge distance is set to "infinity", edge breakout verification is not performed in that direction

Vhodne podatke in rezultate je potrebno preveriti glede skladnosti z obstoječimi pogoji in verodostojnosti!
PROFIS Engineering ( c ) 2003-2025 Hilti AG, FL-9494 Schaan Hilti je registrirana blagovna znamka Hilti AG, Schaan

| | | | |
|---|---|---|---|
| Podjetje: | RAZPON d.o.o. | Stran: | 10 |
| Naslov: | Tehnološki park 20, 1000 Ljubljana | Projektant: | Igor Gorup |
| Telefon I Faks: | +38616203366 \| | E-mail: | igor.gorup@razpon.si |
| Projektiranje: | Beton - 11. Juni 2025 | Datum: | 25.06.2025 |
| Točka pritrjevanja: | Sidranje S1 | | |

### 1.5 Kombinacija nateznih in strižnih obremenitev (EN 1992-4-4, del 7.2.3)

Porušitev jekla

| $\beta_N$ | $\beta_V$ | $\alpha$ | Izkoriščenost $\beta_{N,V}$ [%] | Status |
|---|---|---|---|---|
| 0,743 | 0,027 | 2,000 | 56 | OK |

$\beta_N^{\alpha} + \beta_V^{\alpha} \leq 1{,}0$

Porušitev betona

| $\beta_N$ | $\beta_V$ | $\alpha$ | Izkoriščenost $\beta_{N,V}$ [%] | Status |
|---|---|---|---|---|
| 0,808 | 0,035 | 1,000 | 71 | OK |

$(\beta_N + \beta_V) / 1.2 \leq 1{,}0$

### 1.6 Opozorila

- Projektne metode v programski opremi PROFIS Engineering zahtevajo uporabo absolutno toge ležiščne pločevine v skladu z regulativami (ETAG 001/Annex C, EOTA TR029, itd.). To pomeni, da se porazdelitev obremenitve na sidra zaradi elastičnih deformacij sidrne plošče ne upošteva - predpostavlja se, da je ležiščna pločevina toga, da se ne deformira, v primeru delovanja projektne obtežbe. PROFIS Engineering izračuna najmanjšo potrebno debelino ležiščne pločevine s CBFEM metodo za omejitev napetosti v ležiščni pločevini na podlagi zgornjih predpostavk. PROFIS Engineering ne dokazuje, da je predpostavka o togi ležiščni pločevini pravilna. Vhodne podatke in rezultate je potrebno preveriti, da so v skladu z obstoječimi pogoji in verodostojnosti!
- The equations presented in this report are based on metric units. When inputs are displayed in imperial units, the user should be aware that the equations remain in their metric format.
- Potrebno je opraviti kontrolo prenosa obtežbe v osnovni material po EN 1992-4, Dodatek A!
- Pozor! V primeru tlačne sile, ki deluje na sidra, je potrebno posebej opraviti še dve kontroli in sicer kontrolo uklona in lokalni vnos obtežbe v osnovni material.
- Izračun je veljaven samo v primeru, če luknja v ležiščni pločevini ni večja od vrednosti podane v Tabeli 6.1 of EN 1992-4!! Za večje premere izvrtin glej točko 6.2.2 of EN 1992-4!
- Seznam dodatne opreme v tem poročilu je samo za informacije uporabnika. V vsakem primeru je potrebno upoštevati navodila za uporabo, ki so priložena izdelku, da zagotovite pravilno vgradnjo.
- For the determination of the $\psi_{re,v}$ (concrete edge failure) the minimum concrete cover defined in the design settings is used as the concrete cover of the edge reinforcement.
- Karakteristična sprijena trdnost je odvisna od kratkotrajnih in dolgotrajnih temperaturnih obremenitev.
- Zagotovljena mora biti vzdolžna armatura po robu betona.
- Izračun je veljaven samo v primeru zapolnitev vrzeli, po EN 1992-4 Tabela 6.1
- Load transfer from supplementary reinforcement to the structural member shall be verified by the responsible structural engineer.
- With supplementary reinforcement and post-installed anchors, please ensure that in the jobsite the rebars are not drilled through.
- Metode projektiranja v programu PROFIS Engineering zahtevajo upoštevanje toge ležiščne pločevine, skladno z veljavnimi predpisi (ETAG 001/Dodatek C, EOTA TR029, itd.). To pomeni, da je ležiščna pločevina absolutno toga in prepreči prerazporeditev obtežbe na sidra zaradi elastičnih/plastičnih pomikov. Uporabnik sprejme, da se ležiščna pločevina po inženirski presoji upošteva kot skoraj toga.
- Karakteristična sprijemna trdnost je odvisna od povratne dobe (servisna doba v letih): 50


PROFIS Engineering ( c ) 2003-2025 Hilti AG, FL-9494 Schaan Hilti je registrirana blagovna znamka Hilti AG, Schaan

| | | | |
|---|---|---|---|
| Podjetje: | RAZPON d.o.o. | Stran: | 11 |
| Naslov: | Tehnološki park 20, 1000 Ljubljana | Projektant: | Igor Gorup |
| Telefon I Faks: | +38616203366 \| | E-mail: | igor.gorup@razpon.si |
| Projektiranje: | Beton - 11. Juni 2025 | Datum: | 25.06.2025 |
| Točka pritrjevanja: | Sidranje S1 | | |

### 1.7 Podatki za vgradnjo

Ležiščna pločevina, jeklo: S 355; E = 210.000,00 N/mm$^2$; $f_{yk}$ = 355,00 N/mm$^2$
Profil: IPB/HEB, IPB 260 / HE 260 B; (L x W x T x FT) = 260,0 mm x 260,0 mm x 10,0 mm x 17,5 mm

Premer luknje v ležiščni plošči: $d_f$ = 33,0 mm

Debelina ležiščne pločevine (vnos): 50,0 mm

Metoda vrtanja: Udarno vrtanje
Čiščenje: Potrebno je čiščenje izvrtine z uporabo stisnjenega zraka v skladu z navodili za uporabo.

Tip in velikost sidra: HIT-RE 500 V3 + HAS Meter 8.8 M30
Številka artikla: 2390172 HAS 8.8 M30x1000 (element) / 2123403 HIT-RE 500 V3 (kemično sidro)

Maximum installation torque: 300 Nm

Globina izvrtine v osnovnem materialu: 35,0 mm

Globina izvrtine v osnovnem materialu: 600,0 mm

Minimalna debelina osnovnega materiala: 670,0 mm

Hilti AM 8.8 threaded rod with HIT-RE 500 V3 injection mortar with 600 mm embedment hef, M30, Steel galvanized, Hammer drill bit installation per ETA 16/0143, with annular gaps filled with Hilti Dynamic set or any suitable gap solutions

#### 1.7.1 Priporočeni dodatki

| Vrtanje | Čiščenje | Vgradnja |
|---|---|---|
| • Primerno vrtalno udarno kladivo<br>• Ustrezen sveder | • Zahtevano izpihovanje s komprimiranim zrakom in ustreznimi pripomočki, za izpihovanje prahu iz dna izvrtine.<br>• Okrogla jeklena ščetka ustreznega premera | • Dozirnik s kaseto in mešalcem<br>• Momentni ključ |

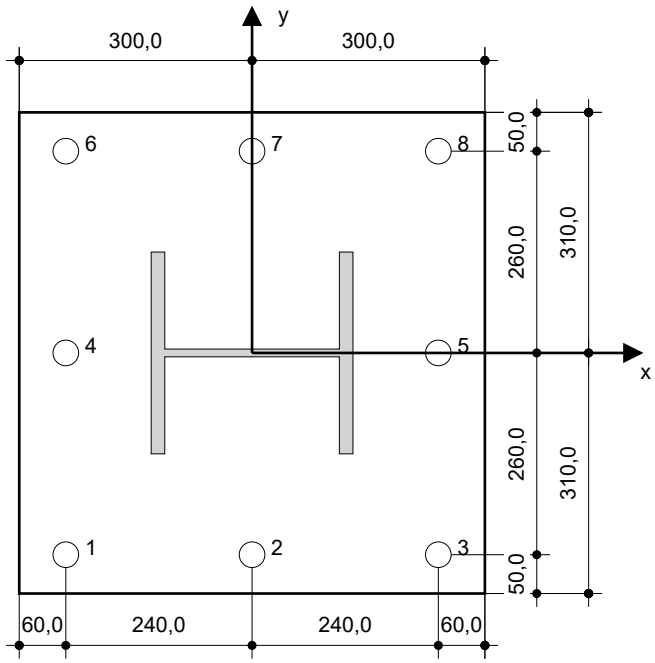


**Koordinate sidra [mm]**

| Sidro | x | y | $c_{-x}$ | $c_{+x}$ | $c_{-y}$ | $c_{+y}$ |
|---|---|---|---|---|---|---|
| 1 | −240,0 | −260,0 | - | - | 860,0 | 1.380,0 |
| 2 | 0,0 | −260,0 | - | - | 860,0 | 1.380,0 |
| 3 | 240,0 | −260,0 | - | - | 860,0 | 1.380,0 |
| 4 | −240,0 | 0,0 | - | - | 1.120,0 | 1.120,0 |

| Sidro | x | y | $c_{-x}$ | $c_{+x}$ | $c_{-y}$ | $c_{+y}$ |
|---|---|---|---|---|---|---|
| 5 | 240,0 | 0,0 | - | - | 1.120,0 | 1.120,0 |
| 6 | −240,0 | 260,0 | - | - | 1.380,0 | 860,0 |
| 7 | 0,0 | 260,0 | - | - | 1.380,0 | 860,0 |
| 8 | 240,0 | 260,0 | - | - | 1.380,0 | 860,0 |

Vhodne podatke in rezultate je potrebno preveriti glede skladnosti z obstoječimi pogoji in verodostojnosti!
PROFIS Engineering ( c ) 2003-2025 Hilti AG, FL-9494 Schaan Hilti je registrirana blagovna znamka Hilti AG, Schaan

| | | | |
|---|---|---|---|
| Podjetje: | RAZPON d.o.o. | Stran: | 12 |
| Naslov: | Tehnološki park 20, 1000 Ljubljana | Projektant: | Igor Gorup |
| Telefon I Faks: | +38616203366 \| | E-mail: | igor.gorup@razpon.si |
| Projektiranje: | Beton - 11. Juni 2025 | Datum: | 25.06.2025 |
| Točka pritrjevanja: | Sidranje S1 | | |

# 2 Izračun ležiščne pločevine

### 2.1 Vhodni podatki

| | |
|---|---|
| Ležiščna pločevina: | Oblika: Pravokotna<br>$l_x$ x $l_y$ x t = 600,0 mm x 620,0 mm x 50,0 mm<br>Izračun: FEM<br>Material: S 355; $F_y$ = 335,00 N/mm²; $\varepsilon_{lim}$ = 5,00% |
| Tip in velikost sidra: | HIT-RE 500 V3 + HAS Meter 8.8 M30, $h_{ef}$ = 600,0 mm |
| Togost sidra: | Sidro je modelirano z upoštevanjem togosti določene iz grafov obremenitev-deformacija, na podlagi testov v neodvisnih laboratorijih. Upoštevajte, da enostavna zamenjava sidra ni mogoča, saj togost sidra močno vpliva na rezultate porazdelitve obtežbe. |
| Projektna metoda: | EN-based design uporaba MKE z upoštevanjem posameznih komponent |
| Vgradnja z nadvišanjem: | $e_b$ = 0,0 mm (No stand-off); t = 50,0 mm |
| Profil: | IPB 260 / HE 260 B; (L x W x T x FT) = 260,0 mm x 260,0 mm x 10,0 mm x 17,5 mm<br>Material: S 355; $F_y$ = 355,00 N/mm²; $\varepsilon_{lim}$ = 5,00%<br>Ekscentričnost x: 0,0 mm<br>Ekscentričnost y: 0,0 mm |
| Osnovni material: | Uncracked concrete; C25/30; $f_{c,cyl}$ = 25,00 N/mm²; h = 1.000,0 mm; E = 31.000,00 N/mm²; G = 12.916,67 N/mm²; v = 0,20 |
| Zvari (profil na ležiščno pločevino): | Tip razporeditve: Plastičen<br>Material: S 355 |
| Toge ojačitve: | Geometrija: Chamfered; velikost = $l_x$ x $l_y$ x t = 240,0 mm x 120,0 mm x 15,0 mm<br>Material: S 355; $F_y$ = 355,00 N/mm²; $\varepsilon_{lim}$ = 5,00% |
| Zvari (toge ojačitve na profil/ležiščno ploščo): | Tip razporeditve: Plastičen<br>Material: S 355 |
| Velikost mreže: | Število elementov na robu: 8<br>Min. velikost elementa: 10,0 mm<br>Maks. velikost elementa: 50,0 mm |

### 2.2 Povzetek

| | Opis | Profil | | Toge ojačitve | | Ležiščna pločevina | | | Zvari [%] | Beton [%] |
|---|---|---|---|---|---|---|---|---|---|---|
| | | $\sigma_{Ed}$ [N/mm²] | $\varepsilon_{Pl}$ [%] | $\sigma_{Ed}$ [N/mm²] | $\varepsilon_{Pl}$ [%] | $\sigma_{Ed}$ [N/mm²] | $\varepsilon_{Pl}$ [%] | Nosilnost pločevine na bočni pritisk v območju luknje [%] | | |
| 1 | Kombination 1 | 220,03 | 0,00 | 206,69 | 0,00 | 102,43 | 0,00 | 1 | 99 | 7 |

### 2.3 Klasifikacija ležiščne pločevine

Spodnji rezultati so prikazani za merodajno obtežno kombinacijo: Kombination 1

| Natezne sile v sidru | Ekvivalentno toga ležiščna pločevina (FEM) | Projektiranje z upoštevanjem podajne ležiščne pločevine (FEM) |
|---|---|---|
| Sidro 1 | −0,006 kN | −0,005 kN |
| Sidro 2 | 43,147 kN | 56,667 kN |
| Sidro 3 | 116,722 kN | 71,350 kN |
| Sidro 4 | −0,003 kN | −0,004 kN |
| Sidro 5 | 137,912 kN | 222,345 kN |
| Sidro 6 | 3,769 kN | 0,000 kN |
| Sidro 7 | 85,516 kN | 114,081 kN |
| Sidro 8 | 159,090 kN | 100,923 kN |

Uporabnik je sprejel, da je obnašanje ležiščne pločevine 100 % togo, po svoji inženirski presoji.To pomeni, da so lahko uporabljene smernice za dimenzioniranje sider.

Vhodne podatke in rezultate je potrebno preveriti glede skladnosti z obstoječimi pogoji in verodostojnosti!
PROFIS Engineering ( c ) 2003-2025 Hilti AG, FL-9494 Schaan Hilti je registrirana blagovna znamka Hilti AG, Schaan

| | | | |
|---|---|---|---|
| Podjetje: | RAZPON d.o.o. | Stran: | 13 |
| Naslov: | Tehnološki park 20, 1000 Ljubljana | Projektant: | Igor Gorup |
| Telefon I Faks: | +38616203366 \| | E-mail: | igor.gorup@razpon.si |
| Projektiranje: | Beton - 11. Juni 2025 | Datum: | 25.06.2025 |
| Točka pritrjevanja: | Sidranje S1 | | |

### 2.4 Profil/Toge ojačitve/Ležiščna pločevina

Profil in jeklene toge ojačitve so preverjene na ravni povezave jekla z betonom. Projektiranje detajla ne nadomesti projektiranja kritičnega jeklenega prereza, tovrstni izračun mora biti preverjen z drugim programom in ne PROFIS Engineering-om.

#### 2.4.1 Nadomestna napetost in plastična deformacija

Kriterij mejnega stanja po EN1993-1-5 Dodatek C.8, (1) 2.

**Rezultati**

| Del | Obtežna kombinacija | Material | $\sigma_{Ed}$ [N/mm²] | $\varepsilon_{Pl}$ [%] | $f_y$ [N/mm²] | $\gamma_{M0}$ | $f_y/\gamma_{M0}$ [N/mm²] | $\varepsilon_{lim}$ [%] | Status |
|---|---|---|---|---|---|---|---|---|---|
| Ležiščna pločevina | Kombination 1 | S 355 | 102,43 | 0,00 | 335,00 | 1,00 | 335,00 | 5,00 | OK |
| Profil | Kombination 1 | S 355 | 220,03 | 0,00 | 355,00 | 1,00 | 355,00 | 5,00 | OK |
| Profil | Kombination 1 | S 355 | 122,22 | 0,00 | 355,00 | 1,00 | 355,00 | 5,00 | OK |
| Profil | Kombination 1 | S 355 | 120,71 | 0,00 | 355,00 | 1,00 | 355,00 | 5,00 | OK |
| Stiffenera | Kombination 1 | S 355 | 131,50 | 0,00 | 355,00 | 1,00 | 355,00 | 5,00 | OK |
| Stiffenerb | Kombination 1 | S 355 | 199,31 | 0,00 | 355,00 | 1,00 | 355,00 | 5,00 | OK |
| Stiffenerc | Kombination 1 | S 355 | 78,23 | 0,00 | 355,00 | 1,00 | 355,00 | 5,00 | OK |
| Stiffenerd | Kombination 1 | S 355 | 45,48 | 0,00 | 355,00 | 1,00 | 355,00 | 5,00 | OK |
| Stiffenere | Kombination 1 | S 355 | 57,96 | 0,00 | 355,00 | 1,00 | 355,00 | 5,00 | OK |
| Stiffenerf | Kombination 1 | S 355 | 206,69 | 0,00 | 355,00 | 1,00 | 355,00 | 5,00 | OK |

Vhodne podatke in rezultate je potrebno preveriti glede skladnosti z obstoječimi pogoji in verodostojnosti!
PROFIS Engineering ( c ) 2003-2025 Hilti AG, FL-9494 Schaan Hilti je registrirana blagovna znamka Hilti AG, Schaan

| | | | |
|---|---|---|---|
| Podjetje: | RAZPON d.o.o. | Stran: | 14 |
| Naslov: | Tehnološki park 20, 1000 Ljubljana | Projektant: | Igor Gorup |
| Telefon I Faks: | +38616203366 \| | E-mail: | igor.gorup@razpon.si |
| Projektiranje: | Beton - 11. Juni 2025 | Datum: | 25.06.2025 |
| Točka pritrjevanja: | Sidranje S1 | | |

#### 2.4.1.1 Nadomestna napetost

Spodnji rezultati so prikazani za merodajno obtežno kombinacijo: 1 - Kombination 1

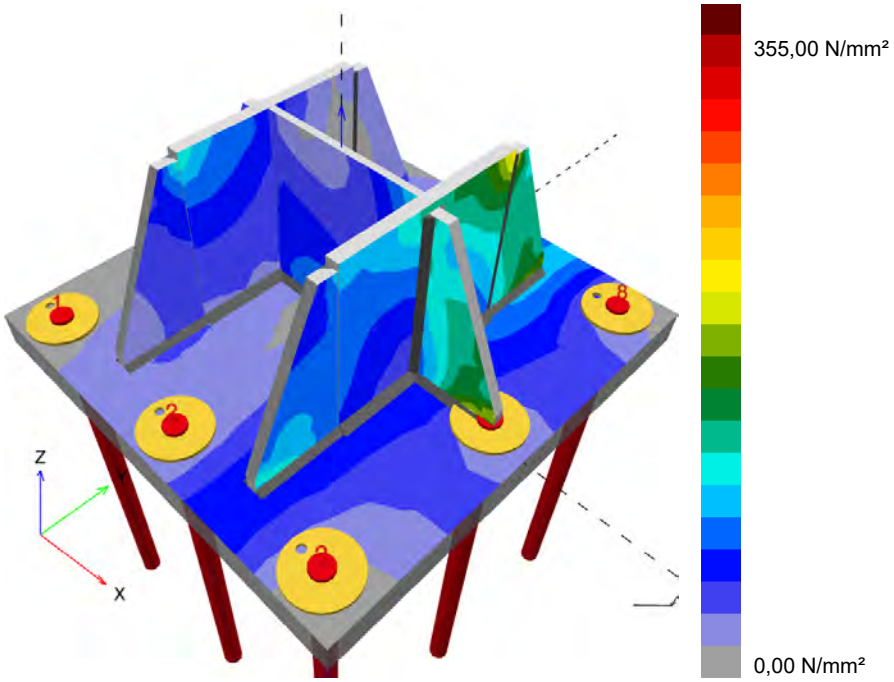


#### 2.4.1.2 Napetost na meji plastičnosti

Spodnji rezultati so prikazani za merodajno obtežno kombinacijo: 1 - Kombination 1

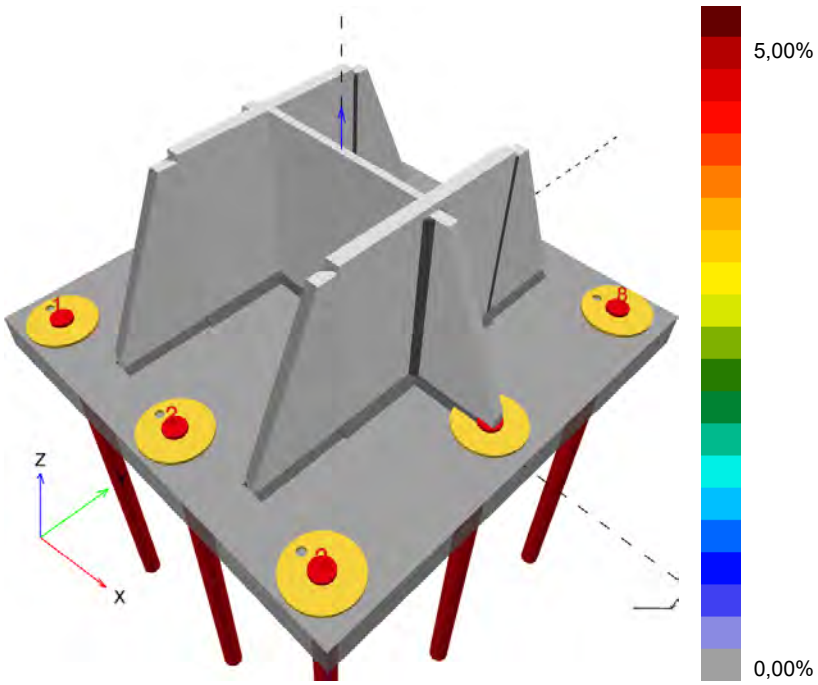



PROFIS Engineering ( c ) 2003-2025 Hilti AG, FL-9494 Schaan Hilti je registrirana blagovna znamka Hilti AG, Schaan

| | | | |
|---|---|---|---|
| Podjetje: | RAZPON d.o.o. | Stran: | 15 |
| Naslov: | Tehnološki park 20, 1000 Ljubljana | Projektant: | Igor Gorup |
| Telefon I Faks: | +38616203366 \| | E-mail: | igor.gorup@razpon.si |
| Projektiranje: | Beton - 11. Juni 2025 | Datum: | 25.06.2025 |
| Točka pritrjevanja: | Sidranje S1 | | |

### 2.4.2 Nosilnost pločevine na bočni pritisk v območju luknje

Merodajna obtežna kombinacija: 1 - Kombination 1

Nosilnost pločevine na bočni pritisk, EN1993-1 - 8 točka 3.6.1:

**Enačbe**

$$F_{b,Rd} = \frac{k_1 \, a_b \, f_u \, d \, t}{\gamma_{M2}}$$

$$\text{Izkoriščenost} = \frac{V_{Ed}}{F_{b,Rd}}$$

**Spremenljivke**

| | $k_1$ | $a_b$ | $f_u$ [N/mm²] | d [mm] | t [mm] | $\gamma_{M2}$ |
|---|---|---|---|---|---|---|
| Sidro 1 | 2,50 | 1,00 | 470,00 | 30,0 | 50,0 | 1.25 |
| Sidro 2 | 2,50 | 1,00 | 470,00 | 30,0 | 50,0 | 1.25 |
| Sidro 3 | 2,50 | 0,62 | 470,00 | 30,0 | 50,0 | 1.25 |
| Sidro 4 | 2,50 | 1,00 | 470,00 | 30,0 | 50,0 | 1.25 |
| Sidro 5 | 2,50 | 0,65 | 470,00 | 30,0 | 50,0 | 1.25 |
| Sidro 6 | 2,50 | 1,00 | 470,00 | 30,0 | 50,0 | 1.25 |
| Sidro 7 | 2,50 | 0,79 | 470,00 | 30,0 | 50,0 | 1.25 |
| Sidro 8 | 2,50 | 0,79 | 470,00 | 30,0 | 50,0 | 1.25 |

**Rezultati**

| | $V_{Ed}$ [kN] | $F_{b,Rd}$ [kN] | Izkoriščenost [%] | Status |
|---|---|---|---|---|
| Sidro 1 | 3,652 | 1.410,000 | 1 | OK |
| Sidro 2 | 3,307 | 1.410,000 | 1 | OK |
| Sidro 3 | 3,465 | 876,318 | 1 | OK |
| Sidro 4 | 3,974 | 1.410,000 | 1 | OK |
| Sidro 5 | 4,900 | 916,902 | 1 | OK |
| Sidro 6 | 3,551 | 1.410,000 | 1 | OK |
| Sidro 7 | 3,962 | 1.117,392 | 1 | OK |
| Sidro 8 | 4,482 | 1.108,568 | 1 | OK |

### 2.5 Zvari

Profili so modelirani brez upoštevanja kotnega radija. Posebna pravila varjenja (kot naprimer: hladno valjani profili...) niso upoštevana v programu.

### 2.5.1 Ležiščna pločevina na profil

Merodajna obtežna kombinacija: 1 - Kombination 1

Izračun zvarov, EN1993-1-8 točka 4.5.3.2

Minimalna debelina zvara na stojini ($a_{min}$): 6,6 mm

Minimalna debelina zvara na pasnici ($a_{min}$): 6,6 mm

Vhodne podatke in rezultate je potrebno preveriti glede skladnosti z obstoječimi pogoji in verodostojnosti!
PROFIS Engineering ( c ) 2003-2025 Hilti AG, FL-9494 Schaan Hilti je registrirana blagovna znamka Hilti AG, Schaan

| | | | |
|---|---|---|---|
| Podjetje: | RAZPON d.o.o. | Stran: | 16 |
| Naslov: | Tehnološki park 20, 1000 Ljubljana | Projektant: | Igor Gorup |
| Telefon I Faks: | +38616203366 \| | E-mail: | igor.gorup@razpon.si |
| Projektiranje: | Beton - 11. Juni 2025 | Datum: | 25.06.2025 |
| Točka pritrjevanja: | Sidranje S1 | | |

**Enačbe**

$$\sigma_{w,Ed} = (\sigma_{\perp}^2 + 3(\tau_{\perp}^2 + \tau_{||}^2))^{0.5}$$

$$\sigma_{w,Rd} = \frac{f_u}{\beta_w \gamma_{M2}}$$

$$\sigma_{\perp,Rd} = 0.9\frac{f_u}{\gamma_{M2}}$$

$$\text{Izkoriščenost} = \max\left(\frac{\sigma_{w,Ed}}{\sigma_{w,Rd}}; \frac{|\sigma_{\perp}|}{\sigma_{\perp,Rd}}\right)$$

**Spremenljivke**

| Zvar | $\beta_w$ | $f_u$ [N/mm²] | $\gamma_{M2}$ |
|---|---|---|---|
| Stojina | 0,90 | 490,00 | 1,25 |
| Pasnica | 0,90 | 490,00 | 1,25 |

| Rob | a [mm] | L [mm] | $\varepsilon_{Pl}$ [%] | $\sigma_{\perp}$ [N/mm²] | $\tau_{||}$ [N/mm²] | $\tau_{\perp}$ [N/mm²] |
|---|---|---|---|---|---|---|
| Member 1-bfl 1 | ◢8,0◣ | 260,0 | 0,00 | 25,80 | 18,68 | 27,82 |
| Member 1-bfl | ◢8,0◣ | 260,0 | 0,00 | 31,75 | −30,37 | −29,73 |
| Member 1-tfl 1 | ◢8,0◣ | 260,0 | 0,00 | −20,90 | 5,33 | −22,95 |
| Member 1-tfl | ◢8,0◣ | 260,0 | 0,00 | −25,71 | 15,99 | 20,91 |
| Member 1-w 1 | ◢6,0◣ | 242,5 | 0,00 | −0,31 | −50,68 | 0,04 |
| Member 1-w | ◢6,0◣ | 242,5 | 0,00 | 1,37 | 49,54 | −1,02 |

**Rezultati**

| Rob | $\sigma_{w,Ed}$ [N/mm²] | $\sigma_{w,Rd}$ [N/mm²] | $\sigma_{\perp,Rd}$ [N/mm²] | Izkoriščenost [%] | Izkoriščenost$_c$ [%] | Status |
|---|---|---|---|---|---|---|
| Member 1-bfl 1 | 63,52 | 417,78 | 338,40 | 16 | 12 | OK |
| Member 1-bfl | 80,16 | 417,78 | 338,40 | 20 | 15 | OK |
| Member 1-tfl 1 | 45,85 | 417,78 | 338,40 | 11 | 8 | OK |
| Member 1-tfl | 52,35 | 417,78 | 338,40 | 13 | 10 | OK |
| Member 1-w 1 | 87,79 | 417,78 | 338,40 | 22 | 16 | OK |
| Member 1-w | 85,84 | 417,78 | 338,40 | 21 | 15 | OK |

### 2.5.2 Jeklena toga ojačitev na profil/ležiščno pločevino

Merodajna obtežna kombinacija: 1 - Kombination 1

Izračun zvarov, EN1993-1-8 točka 4.5.3.2

Minimalna debelina zvara jeklene toge ojačitve na pasnico profila ($a_{min}$): 3,7 mm

Minimalna debelina zvara jeklene toge ojačitve na ležiščno pločevino ($a_{min}$): 6,6 mm

**Enačbe**

$$\sigma_{w,Ed} = (\sigma_{\perp}^2 + 3(\tau_{\perp}^2 + \tau_{||}^2))^{0.5}$$

$$\sigma_{w,Rd} = \frac{f_u}{\beta_w \gamma_{M2}}$$

$$\sigma_{\perp,Rd} = 0.9\frac{f_u}{\gamma_{M2}}$$

$$\text{Izkoriščenost} = \max\left(\frac{\sigma_{w,Ed}}{\sigma_{w,Rd}}; \frac{|\sigma_{\perp}|}{\sigma_{\perp,Rd}}\right)$$

Vhodne podatke in rezultate je potrebno preveriti glede skladnosti z obstoječimi pogoji in verodostojnosti!
PROFIS Engineering ( c ) 2003-2025 Hilti AG, FL-9494 Schaan Hilti je registrirana blagovna znamka Hilti AG, Schaan

| | | | |
|---|---|---|---|
| Podjetje: | RAZPON d.o.o. | Stran: | 17 |
| Naslov: | Tehnološki park 20, 1000 Ljubljana | Projektant: | Igor Gorup |
| Telefon I Faks: | +38616203366 \| | E-mail: | igor.gorup@razpon.si |
| Projektiranje: | Beton - 11. Juni 2025 | Datum: | 25.06.2025 |
| Točka pritrjevanja: | Sidranje S1 | | |

**Spremenljivke**

| $\beta_w$ | $f_u$ [N/mm²] | $\gamma_{M2}$ |
|---|---|---|
| 0,90 | 490,00 | 1,25 |

| Rob | a [mm] | L [mm] | $\varepsilon_{Pl}$ [%] | $\sigma_{\perp}$ [N/mm²] | $\tau_{\parallel}$ [N/mm²] | $\tau_{\perp}$ [N/mm²] |
|---|---|---|---|---|---|---|
| Stiffenera | ◢6,0◣ | 120,0 | 0,00 | 92,29 | −80,36 | 100,37 |
| Stiffenera 1 | ◢6,0◣ | 120,0 | 0,00 | 103,26 | 92,49 | −95,18 |
| Stiffenerb | ◢6,0◣ | 120,0 | 0,01 | 165,73 | −148,96 | 156,63 |
| Stiffenerb 1 | ◢6,0◣ | 120,0 | 0,00 | 154,97 | 137,62 | −164,37 |
| Stiffenerc | ◢6,0◣ | 120,0 | 0,00 | −33,71 | 13,94 | −38,32 |
| Stiffenerc 1 | ◢6,0◣ | 120,0 | 0,00 | −37,51 | 9,52 | 32,85 |
| Stiffenerd | ◢6,0◣ | 120,0 | 0,00 | 43,47 | −48,19 | 28,92 |
| Stiffenerd 1 | ◢6,0◣ | 120,0 | 0,00 | 25,93 | 28,86 | −40,43 |
| Stiffenere (Anchor plate) | ◢6,0◣ | 120,0 | 0,00 | −39,49 | 41,80 | −44,71 |
| Stiffenere (Anchor plate) 1 | ◢6,0◣ | 120,0 | 0,00 | −46,33 | −48,52 | 41,07 |
| Stiffenerf (Anchor plate) | ◢6,0◣ | 120,0 | 0,09 | 162,85 | −138,06 | 167,37 |
| Stiffenerf (Anchor plate) 1 | ◢6,0◣ | 120,0 | 0,09 | 167,32 | 141,75 | −162,76 |
| Stiffenere (Member 1-tfl 1) | ◢6,0◣ | 240,0 | 0,00 | −29,44 | −63,80 | −27,70 |
| Stiffenere (Member 1-tfl 1) 1 | ◢6,0◣ | 240,0 | 0,00 | −27,81 | 62,62 | 29,57 |
| Stiffenerf (Member 1-bfl 1) | ◢6,0◣ | 240,0 | 0,00 | 62,03 | 145,93 | 60,04 |
| Stiffenerf (Member 1-bfl 1) 1 | ◢6,0◣ | 240,0 | 0,00 | 60,07 | −144,43 | −62,02 |

**Rezultati**

| Rob | $\sigma_{w,Ed}$ [N/mm²] | $\sigma_{w,Rd}$ [N/mm²] | $\sigma_{\perp,Rd}$ [N/mm²] | Izkoriščenost [%] | Izkoriščenost$_c$ [%] | Status |
|---|---|---|---|---|---|---|
| Stiffenera | 241,07 | 417,78 | 338,40 | 58 | 35 | OK |
| Stiffenera 1 | 252,00 | 417,78 | 338,40 | 61 | 39 | OK |
| Stiffenerb | 409,43 | 417,78 | 338,40 | 99 | 61 | OK |
| Stiffenerb 1 | 402,35 | 417,78 | 338,40 | 97 | 56 | OK |
| Stiffenerc | 78,26 | 417,78 | 338,40 | 19 | 15 | OK |
| Stiffenerc 1 | 70,12 | 417,78 | 338,40 | 17 | 12 | OK |
| Stiffenerd | 106,61 | 417,78 | 338,40 | 26 | 13 | OK |
| Stiffenerd 1 | 89,87 | 417,78 | 338,40 | 22 | 9 | OK |
| Stiffenere (Anchor plate) | 113,13 | 417,78 | 338,40 | 28 | 10 | OK |
| Stiffenere (Anchor plate) 1 | 119,46 | 417,78 | 338,40 | 29 | 12 | OK |
| Stiffenerf (Anchor plate) | 409,56 | 417,78 | 338,40 | 99 | 54 | OK |
| Stiffenerf (Anchor plate) 1 | 409,57 | 417,78 | 338,40 | 99 | 55 | OK |
| Stiffenere (Member 1-tfl 1) | 124,03 | 435,56 | 352,80 | 29 | 8 | OK |
| Stiffenere (Member 1-tfl 1) 1 | 123,13 | 435,56 | 352,80 | 29 | 8 | OK |
| Stiffenerf (Member 1-bfl 1) | 280,27 | 435,56 | 352,80 | 65 | 28 | OK |

Vhodne podatke in rezultate je potrebno preveriti glede skladnosti z obstoječimi pogoji in verodostojnosti!
PROFIS Engineering ( c ) 2003-2025 Hilti AG, FL-9494 Schaan Hilti je registrirana blagovna znamka Hilti AG, Schaan

| | | | |
|---|---|---|---|
| Podjetje: | RAZPON d.o.o. | Stran: | 18 |
| Naslov: | Tehnološki park 20, 1000 Ljubljana | Projektant: | Igor Gorup |
| Telefon I Faks: | +38616203366 \| | E-mail: | igor.gorup@razpon.si |
| Projektiranje: | Beton - 11. Juni 2025 | Datum: | 25.06.2025 |
| Točka pritrjevanja: | Sidranje S1 | | |

| Rob | $\sigma_{w,Ed}$ [N/mm²] | $\sigma_{w,Rd}$ [N/mm²] | $\sigma_{\perp,Rd}$ [N/mm²] | Izkoriščenost [%] | Izkoriščenost$_c$ [%] | Status |
|---|---|---|---|---|---|---|
| Stiffenerf (Member 1-bfl 1) 1 | 278,79 | 435,56 | 352,80 | 65 | 28 | OK |

### 2.6 Beton

Merodajna obtežna kombinacija: 1 - Kombination 1

V skladu s standardom EN1992-1-1 točka 6.7(4), mora biti beton dovolj armiran za prevzem nateznih sil, ki jih povzroči pritrjeni element. Programska oprema PROFIS Engineering ne zajema določitve potrebne armature v betonu.

#### 2.6.1 Pritisk na beton pod ležiščno pločevino

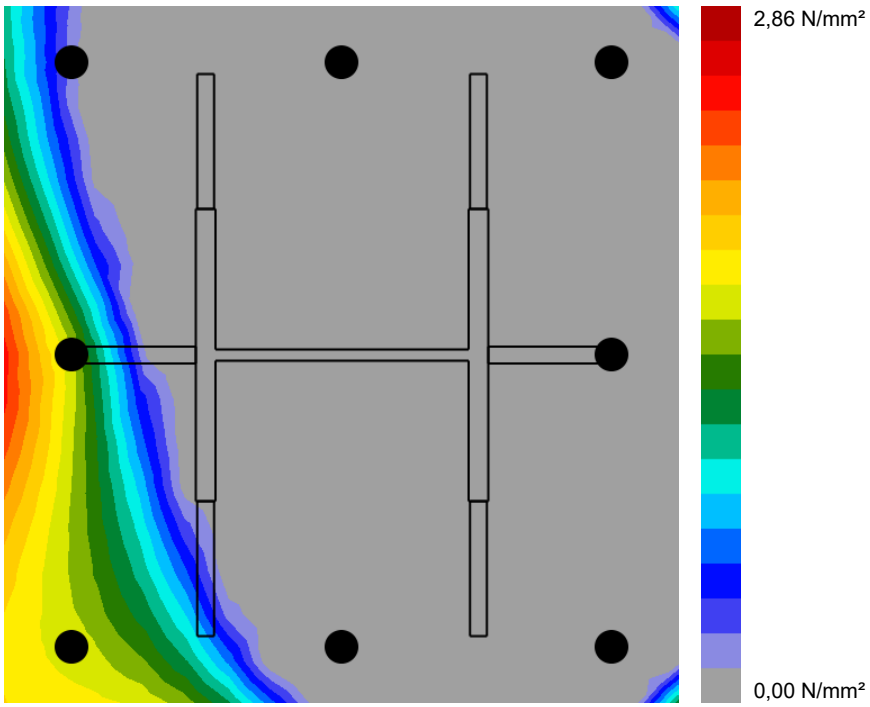


#### 2.6.2 Kontrola tlačnih napetosti v betonu pod ležiščno pločevino okoli profila po EN1992-1 točka 6.7 in EN1993-1-8, točka 6.2.5

**Enačbe**

$$f_{jd} = \frac{\beta_j \, k_j \, \alpha_{cc} \, f_{ck}}{\gamma_c}$$

$$\sigma = \frac{N}{A_{eff}}$$

$$\text{Izkoriščenost} = \frac{\sigma}{f_{jd}}$$

**Spremenljivke**

| N [kN] | $A_{eff}$ [mm²] | $\beta_j$ | $k_j$ | $\alpha_{cc}$ | $f_{ck}$ [N/mm²] | $\gamma_c$ |
|---|---|---|---|---|---|---|
| 97,858 | 48.015 | 0,67 | 3,00 | 1,00 | 25,00 | 1,50 |

**Rezultati**

| $\sigma$ [N/mm²] | $f_{jd}$ [N/mm²] | Izkoriščenost [%] | Status |
|---|---|---|---|
| 2,04 | 33,50 | 7 | OK |

Vhodne podatke in rezultate je potrebno preveriti glede skladnosti z obstoječimi pogoji in verodostojnosti!
PROFIS Engineering ( c ) 2003-2025 Hilti AG, FL-9494 Schaan Hilti je registrirana blagovna znamka Hilti AG, Schaan

| | | | |
|---|---|---|---|
| Podjetje: | RAZPON d.o.o. | Stran: | 19 |
| Naslov: | Tehnološki park 20, 1000 Ljubljana | Projektant: | Igor Gorup |
| Telefon I Faks: | +38616203366 \| | E-mail: | igor.gorup@razpon.si |
| Projektiranje: | Beton - 11. Juni 2025 | Datum: | 25.06.2025 |
| Točka pritrjevanja: | Sidranje S1 | | |

### 2.7 Pomen simbolov

| | |
|---|---|
| a | Debelina zvara |
| $a_b$ | Faktor |
| $\alpha_{cc}$ | Dolgotrajne posledice na maksimalno trdnost betona |
| $A_{eff}$ | Efektivna površina |
| $a_{min}$ | Minimalna debelina zvara |
| $\beta_j$ | Koeficient spoja $\beta_j$ |
| $\beta_w$ | Korelacijski faktor EN 1993-1-8 tab. 4.1 |
| d | Nominalni premer vijaka |
| $\varepsilon_{lim}$ | Mejna plastična deformacija |
| $\varepsilon_{Pl}$ | Plastična deformacija po CBFEM |
| $F_{b,Rd}$ | Odpornost ležiščne pločevine EN 1993-1-8 tab. 3.4 |
| $f_{ck}$ | Karakteristična tlačna trdnost betona |
| $f_{jd}$ | Mejna odpornost betonske kocke |
| $f_u$ | Mejna odpornost |
| $f_y$ | Meja tečenja |
| $\gamma_c$ | Faktor uporabe - SP 16, Tabela 41 |
| $\gamma_{M0}$ | Varnostni faktor jekla gamma M0 |
| $\gamma_{M2}$ | Varnostni faktor jekla gamma M2 |
| $k_1$ | Faktor oddaljenosti od roba in razmak med vijaki pravokotno na smer prenosa obremenitve - EN 1993-1-8 - Tabela 3.4 |
| $k_j$ | Faktor koncentracije |
| L | Dolžina zvara |
| N | Rezultanta tlačne sile |
| $\sigma$ | Povprečna napetost v betonu |
| $\sigma_\perp$ | Pravokotne napetosti |
| $\sigma_{\perp,Rd}$ | Odpornost na pravokotne napetosti |
| $\sigma_{Ed}$ | Nadomestna napetost |
| $\sigma_{w,Ed}$ | Nadomestna napetost |
| $\sigma_{w,Rd}$ | Odpornost nadomestne napetosti |
| t | Debelina ležiščne pločevine |
| $\tau_\perp$ | Strižna napetost pravokotno na os zvara |
| $\tau_{\parallel}$ | Strižna napetost pravokotno na os zvara |
| Izkoriščenost$_c$ | Izkoriščenost zvarov |
| $V_{Ed}$ | Strižna sila na sidro |

### 2.8 Opozorila

- Z uporabo funkcionalnosti podajne ležiščne pločevine programa PROFIS Engineering ste mogoče izven okvirov standarda in vaša specificirana ležiščna pločevina se ne bo obnašala togo. Prosimo vas, da preverite rezultate s kompetentnim odgovornim projektantom za zagotovitev primernosti in ustreznosti za vaše specifične pristojnosti in projektne zahteve.
- Sidro je modelirano z upoštevanjem togosti določene iz grafov obremenitev-deformacija, na podlagi testov v neodvisnih laboratorijih. Upoštevajte, da enostavna zamenjava sidra ni mogoča, saj togost sidra močno vpliva na rezultate porazdelitve obtežbe.

Vhodne podatke in rezultate je potrebno preveriti glede skladnosti z obstoječimi pogoji in verodostojnosti!
PROFIS Engineering ( c ) 2003-2025 Hilti AG, FL-9494 Schaan Hilti je registrirana blagovna znamka Hilti AG, Schaan

| | | | |
|---|---|---|---|
| Podjetje: | RAZPON d.o.o. | Stran: | 20 |
| Naslov: | Tehnološki park 20, 1000 Ljubljana | Projektant: | Igor Gorup |
| Telefon I Faks: | +38616203366 \| | E-mail: | igor.gorup@razpon.si |
| Projektiranje: | Beton - 11. Juni 2025 | Datum: | 25.06.2025 |
| Točka pritrjevanja: | Sidranje S1 | | |

## 3 Povzetek rezultatov

Izračun ležiščne pločevine, sider, zvarov in ostalih elementov je zasnovan po metodi CBFEM (metoda končnih elementov z upoštevanjem posameznih komponent) in regulativ iz Evrokoda.

| | Obtežna kombinacija | Maks. izkoriščenost | Status |
|---|---|---|---|
| Sidra | Kombination 1 | 81% | OK |
| Ležiščna pločevina | Kombination 1 | 31% | OK |
| Zvari | Kombination 1 | 99% | OK |
| Toge ojačitve | Kombination 1 | 59% | OK |
| Beton | Kombination 1 | 7% | OK |
| Profil | Kombination 1 | 62% | OK |

**Izbrano pritrjevanje ustreza projektnim pogojem!**

Vhodne podatke in rezultate je potrebno preveriti glede skladnosti z obstoječimi pogoji in verodostojnosti!
PROFIS Engineering ( c ) 2003-2025 Hilti AG, FL-9494 Schaan Hilti je registrirana blagovna znamka Hilti AG, Schaan

| | | | |
|---|---|---|---|
| Podjetje: | RAZPON d.o.o. | Stran: | 21 |
| Naslov: | Tehnološki park 20, 1000 Ljubljana | Projektant: | Igor Gorup |
| Telefon I Faks: | +38616203366 \| | E-mail: | igor.gorup@razpon.si |
| Projektiranje: | Beton - 11. Juni 2025 | Datum: | 25.06.2025 |
| Točka pritrjevanja: | Sidranje S1 | | |

## 4 Opombe; Vaše dolžnosti sodelovanja

- Vse informacije in podatki, ki jih vsebuje programska oprema, se nanašajo izključno na uporabo izdelkov Hilti in temeljijo na načelih, formulah in varnostnih predpisih v skladu s tehničnimi navodili podjetja Hilti ter navodili za uporabo, montažo in montažo itd. ki jih mora uporabnik dosledno upoštevati. Vse vsebovane vrednosti so povprečne številke, zato je treba pred uporabo ustreznega izdelka Hilti opraviti preskuse, specifične za uporabo. Rezultati izračunov s programsko opremo v osnovi temeljijo na podatkih, ki jih vnesete. Zato prevzemate vso odgovornost za odsotnost napak, popolnost in ustreznost podatkov, ki jih morate vnesti. Poleg tega prevzemate vso odgovornost za to, da rezultate izračunov pregleda in popravi strokovnjak, zlasti glede skladnosti z veljavnimi normativi in dovoljenji, preden jih uporabite za svoj specifični objekt. Programska oprema služi le kot pomoč pri razlagi norm in dovoljenj brez kakršnega koli jamstva o odsotnosti napak, pravilnosti in ustreznosti rezultatov ali primernosti za določeno aplikacijo.
- Za preprečevanje ali omejitev škode, ki jo povzroča programska oprema, morate sprejeti vse potrebne in razumne ukrepe. Zlasti morate poskrbeti za redno varnostno kopiranje izračunov in podatkov ter po potrebi redno posodabljati programsko opremo, ki jo ponuja Hilti. Če ne uporabljate funkcije AutoUpdate programske opreme, morate z uporabo ročnih posodobitev prek spletnega mesta Hilti zagotoviti, da uporabljate trenutno in posodobljeno različico programske opreme. Hilti ne bo odgovoren za posledice, kot so obnovitev izgubljenih ali poškodovanih podatkov ali programov, ki so posledica krivdne kršitve dolžnosti.

Vhodne podatke in rezultate je potrebno preveriti glede skladnosti z obstoječimi pogoji in verodostojnosti!
PROFIS Engineering ( c ) 2003-2025 Hilti AG, FL-9494 Schaan Hilti je registrirana blagovna znamka Hilti AG, Schaan

| | | | |
|---|---|---|---|
| Podjetje: | RAZPON d.o.o. | Stran: | 1 |
| Naslov: | Tehnološki park 20, 1000 Ljubljana | Projektant: | Igor Gorup |
| Telefon I Faks: | +38616203366 \| | E-mail: | igor.gorup@razpon.si |
| Projektiranje: | Beton - 11. Juni 2025 (1) | Datum: | 13.06.2025 |
| Točka pritrjevanja: | Sidranje S2 | | |

**Komentar projektanta:**

# 1 Izračun detajla sidranja

## 1.1 Vhodni podatki

| | |
|---|---|
| **Tip in velikost sidra:** | **HIT-RE 500 V4 + HAS Meter 8.8 M30** |
| Povratna doba (življenjska doba v letih): | 50 |
| Številka artikla: | 2390172 HAS 8.8 M30x1000 (element) / 2287557 HIT-RE 500 V4 (kemično sidro) |

**Potresni/polnilni set ali podobna rešitev za zapolnitev vrzeli**

| | |
|---|---|
| Specification text: | Hilti AM 8.8 Gewindestange with HIT-RE 500 V4 Injektionssystem with 600 mm embedment hef, M30, Stahl galvanisiert, Hammerbohren installation per ETA 20/0541, mit verfülltem Ringspalt mittels des Hilti Dynamic/Verfüllsets oder einer anderen geeigneten Methode, |
| Efektivna sidrna globina: | $h_{ef,act}$ = 600,0 mm ($h_{ef,limit}$ = - mm) |
| Material: | 8.8 |
| Tehnična ocena artikla: | ETA 20/0541 |
| Izdano I Veljavno: | 09.06.2023 \| - |
| Kontrola: | Projektna metoda EN 1992-4, Kemično sidro |
| Vgradnja z nadvišanjem: | $e_b$ = 0,0 mm (brez nadvišanja); t = 40,0 mm |
| Ležišča pločevina[CBFEM] : | $l_x$ x $l_y$ x t = 560,0 mm x 560,0 mm x 40,0 mm; |
| Profil: | IPB/HEB, IPB 260 / HE 260 B; (L x W x T x FT) = 260,0 mm x 260,0 mm x 10,0 mm x 17,5 mm |
| Osnovni material: | razpokan beton, C25/30, $f_{c,cyl}$ = 25,00 N/mm$^2$; h =1.000,0 mm, Temp. kratko./dolgo.: 40/24 °C, delni varnostni faktor materiala $\gamma_c$ = 1,500 |
| **Vgradnja:** | **Hammer drilled hole, Pogoji vgradnje: Suho** |
| Ojačitev: | brez armature ali razmak med armaturo >= 150 mm (any Ø) or >= 100 mm (Ø <= 10 mm)<br>z vzdolžno armaturo po robu betona d >= 12,0 [mm] + gosta mreža (armatura, obešala) s <= 100,0 [mm]<br>Prisotna je armatura za kontrolo cepitve betona v skladu s standardom EN 1992-4, 7.2.1.7 (2) b) 2) |

[CBFEM] - Izračun sider temelji na metodi končnih elementov z upoštevanjem posameznih komponent (CBFEM)

Vhodne podatke in rezultate je potrebno preveriti glede skladnosti z obstoječimi pogoji in verodostojnosti!
PROFIS Engineering ( c ) 2003-2025 Hilti AG, FL-9494 Schaan Hilti je registrirana blagovna znamka Hilti AG, Schaan

| | | | |
|---|---|---|---|
| Podjetje: | RAZPON d.o.o. | Stran: | 2 |
| Naslov: | Tehnološki park 20, 1000 Ljubljana | Projektant: | Igor Gorup |
| Telefon I Faks: | +38616203366 \| | E-mail: | igor.gorup@razpon.si |
| Projektiranje: | Beton - 11. Juni 2025 (1) | Datum: | 13.06.2025 |
| Točka pritrjevanja: | Sidranje S2 | | |

**Geometrija [mm] & Obtežba [kN, kNm]**

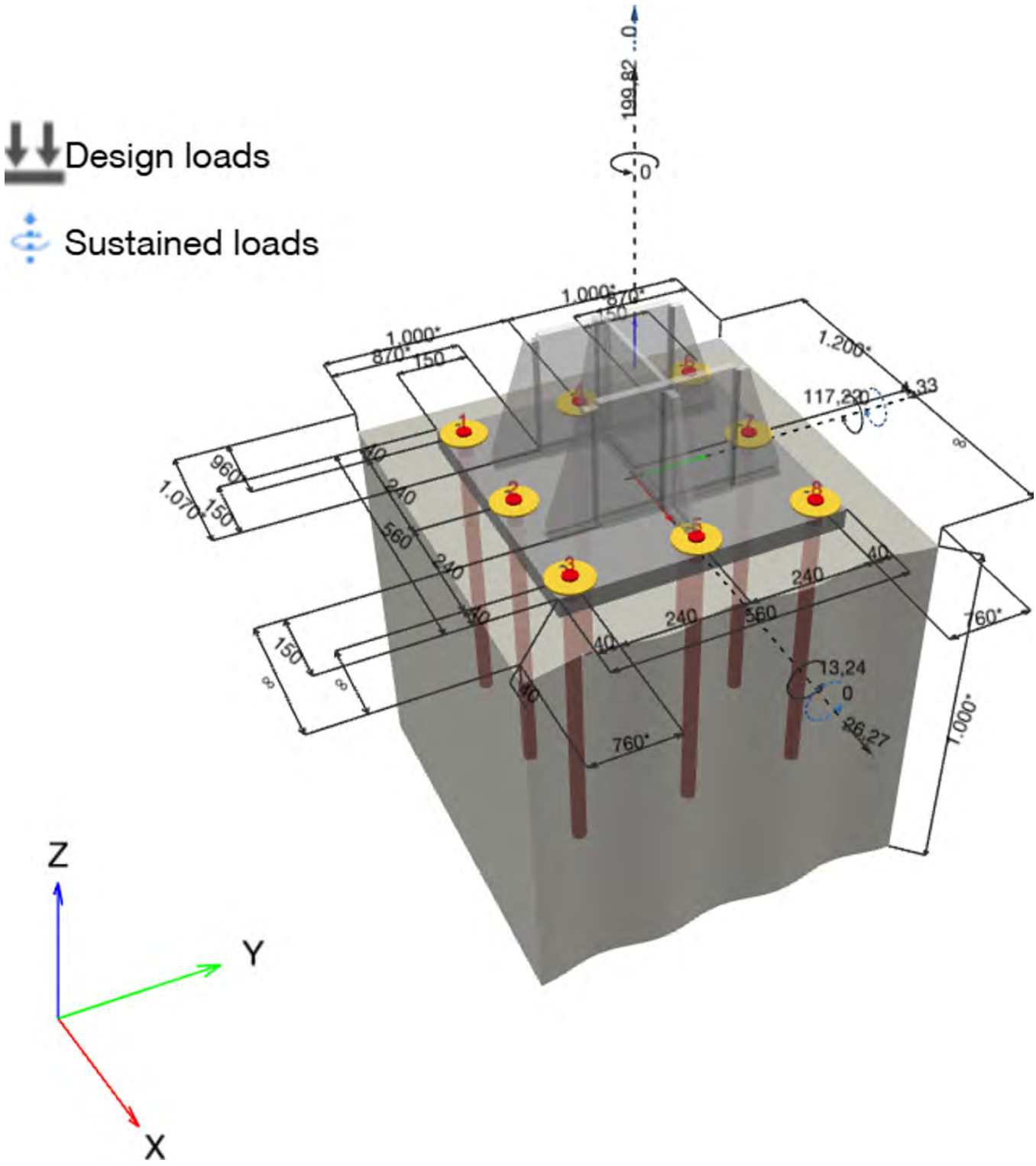


Vhodne podatke in rezultate je potrebno preveriti glede skladnosti z obstoječimi pogoji in verodostojnosti!
PROFIS Engineering ( c ) 2003-2025 Hilti AG, FL-9494 Schaan Hilti je registrirana blagovna znamka Hilti AG, Schaan

| | | | |
|---|---|---|---|
| Podjetje: | RAZPON d.o.o. | Stran: | 3 |
| Naslov: | Tehnološki park 20, 1000 Ljubljana | Projektant: | Igor Gorup |
| Telefon I Faks: | +38616203366 \| | E-mail: | igor.gorup@razpon.si |
| Projektiranje: | Beton - 11. Juni 2025 (1) | Datum: | 13.06.2025 |
| Točka pritrjevanja: | Sidranje S2 | | |


### 1.1.1 Obtežna kombinacija

| Primer | Opis | Sile [kN] / Momenti [kNm] | Potresno | požar | Izkoriščenost [%] |
|---|---|---|---|---|---|
| 1 | Kombination 1 | N = 199,820; $V_x$ = 26,270; $V_y$ = −4,330; $M_x$ = 13,240; $M_y$ = 117,220; $M_z$ = 0,000; $N_{sus}$ = 0,000; $M_{x,sus}$ = 0,000; $M_{y,sus}$ = 0,000; | ne | ne | 100 |

### 1.2 Obtežni primer/Rezultante sil v sidru

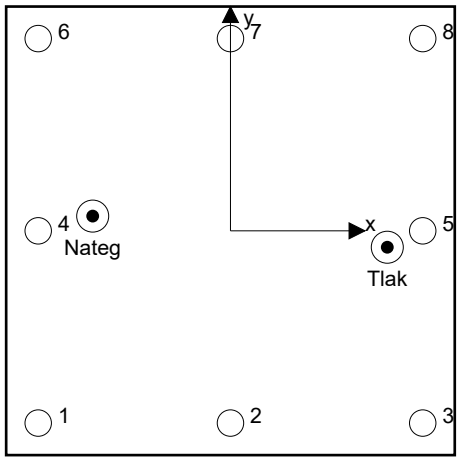


**Reakcije v sidru [kN]**
Natezna sila: (+Nateg, -Tlak)

| Sidro | Natezna sila | Strižna sila | Strižna sila x | Strižna sila y |
|---|---|---|---|---|
| 1 | 55,442 | 3,209 | 3,175 | 0,466 |
| 2 | 50,476 | 2,771 | 2,760 | −0,245 |
| 3 | −0,004 | 3,103 | 2,993 | −0,822 |
| 4 | 185,355 | 4,680 | 4,651 | −0,523 |
| 5 | −0,011 | 3,795 | 3,759 | −0,517 |
| 6 | 67,451 | 3,575 | 3,230 | −1,532 |
| 7 | 71,441 | 2,889 | 2,741 | −0,914 |
| 8 | −0,003 | 2,972 | 2,962 | −0,244 |

Resulting tension force in (x/y)=(−172,0/18,4): 430,147 [kN]
Resulting compression force in (x/y)=(195,8/−20,5): 233,413 [kN]

Sile v sidru so izračunane po metodi končnih elementov z upoštevanjem posameznih komponent (CBFEM)

Vhodne podatke in rezultate je potrebno preveriti glede skladnosti z obstoječimi pogoji in verodostojnosti!
PROFIS Engineering ( c ) 2003-2025 Hilti AG, FL-9494 Schaan Hilti je registrirana blagovna znamka Hilti AG, Schaan

| | | | |
|---|---|---|---|
| Podjetje: | RAZPON d.o.o. | Stran: | 4 |
| Naslov: | Tehnološki park 20, 1000 Ljubljana | Projektant: | Igor Gorup |
| Telefon I Faks: | +38616203366 \| | E-mail: | igor.gorup@razpon.si |
| Projektiranje: | Beton - 11. Juni 2025 (1) | Datum: | 13.06.2025 |
| Točka pritrjevanja: | Sidranje S2 | | |


### 1.3 Natezna obremenitev (EN 1992-4, Točka 7.2.1)

| | Obtežba [kN] | Kapaciteta [kN] | Izkoriščenost $\beta_N$ [%] | Status |
|---|---|---|---|---|
| Nosilnost jekla* | 185,355 | 299,200 | 62 | OK |
| Kombinacija izvleka sidra in betonskega konusa** | 430,165 | 666,827 | 65 | OK |
| Porušitev po konusu betona** | 430,165 | 430,400 | 100 | OK |
| Cepitev betona** | N/A | N/A | N/A | N/A |

*najbolj obremenjeno sidro **skupina sider (natezno obremenjena sidra)

#### 1.3.1 Nosilnost jekla

$$N_{Ed} \leq N_{Rd,s} = \frac{N_{Rk,s}}{\gamma_{Ms}}$$ EN 1992-4, Tabela 7.1

| $N_{Rk,s}$ [kN] | $\gamma_{Ms}$ | $N_{Rd,s}$ [kN] | $N_{Ed}$ [kN] |
|---|---|---|---|
| 448,800 | 1,500 | 299,200 | 185,355 |

Vhodne podatke in rezultate je potrebno preveriti glede skladnosti z obstoječimi pogoji in verodostojnosti!
PROFIS Engineering ( c ) 2003-2025 Hilti AG, FL-9494 Schaan Hilti je registrirana blagovna znamka Hilti AG, Schaan

| | | | |
|---|---|---|---|
| Podjetje: | RAZPON d.o.o. | Stran: | 5 |
| Naslov: | Tehnološki park 20, 1000 Ljubljana | Projektant: | Igor Gorup |
| Telefon I Faks: | +38616203366 \| | E-mail: | igor.gorup@razpon.si |
| Projektiranje: | Beton - 11. Juni 2025 (1) | Datum: | 13.06.2025 |
| Točka pritrjevanja: | Sidranje S2 | | |

### 1.3.2 Kombinacija izvleka sidra in betonskega konusa

$N_{Ed} \le N_{Rd,p} = \frac{N_{Rk,p}}{\gamma_{Mp}}$ EN 1992-4, Tabela 7.1

$N_{Rk,p} = N^0_{Rk,p} \cdot \frac{A_{p,N}}{A^0_{p,N}} \cdot \psi_{g,Np} \cdot \psi_{s,Np} \cdot \psi_{re,Np} \cdot \psi_{ec1,Np} \cdot \psi_{ec2,Np}$ EN 1992-4, Enačba (7.13)

$N^0_{Rk,p} = \psi_{sus} \cdot \tau_{Rk} \cdot \pi \cdot d \cdot h_{ef}$ EN 1992-4, Enačba (7.14)

$\psi_{sus} = 1$ EN 1992-4, Enačba (7.14a)

$s_{cr,Np} = 7{,}3 \cdot d \cdot \sqrt{\psi_{sus} \cdot \tau_{Rk}} \le 3 \cdot h_{ef}$ EN 1992-4, Enačba (7.15)

$\psi_{g,Np} = \psi^0_{g,Np} - \left(\frac{s}{s_{cr,Np}}\right)^{0,5} \cdot \left(\psi^0_{g,Np} - 1\right) \ge 1{,}00$ EN 1992-4, Enačba (7.17)

$\psi^0_{g,Np} = \sqrt{n} - (\sqrt{n} - 1) \cdot \left(\frac{\tau_{Rk}}{\tau_{Rk,c}}\right)^{1,5} \ge 1{,}00$ EN 1992-4, Enačba (7.18)

$\tau_{Rk,c} = \frac{k_3}{\pi \cdot d} \cdot \sqrt{h_{ef} \cdot f_{ck}}$ EN 1992-4, Enačba (7.19)

$\psi_{s,Np} = 0{,}7 + 0{,}3 \cdot \frac{c}{c_{cr,Np}} \le 1{,}00$ EN 1992-4, Enačba (7.20)

$\psi_{ec1,Np} = \frac{1}{1 + \left(\frac{2 \cdot e_{c1,N}}{s_{cr,Np}}\right)} \le 1{,}00$ EN 1992-4, Enačba (7.21)

$\psi_{ec2,Np} = \frac{1}{1 + \left(\frac{2 \cdot e_{c2,N}}{s_{cr,Np}}\right)} \le 1{,}00$ EN 1992-4, Enačba (7.21)

| $A_{p,N}$ [mm²] | $A^0_{p,N}$ [mm²] | $\tau_{Rk,ucr,20}$ [N/mm²] | $s_{cr,Np}$ [mm] | $c_{cr,Np}$ [mm] | $c_{min}$ [mm] | $f_{c,cyl}$ [N/mm²] |
|---|---|---|---|---|---|---|
| 1.376.639 | 671.454 | 14,00 | 819,4 | 409,7 | 760,0 | 25,00 |

| $\psi_c$ | $\tau_{Rk,cr}$ [N/mm²] | $k_3$ | $\tau_{Rk,c}$ [N/mm²] | $\psi^0_{g,Np}$ | $\psi_{g,Np}$ |
|---|---|---|---|---|---|
| 1,023 | 8,69 | 7,700 | 10,01 | 1,235 | 1,108 |

| $e_{c1,N}$ [mm] | $\psi_{ec1,Np}$ | $e_{c2,N}$ [mm] | $\psi_{ec2,Np}$ | $\psi_{s,Np}$ | $\psi_{re,Np}$ |
|---|---|---|---|---|---|
| 28,0 | 0,936 | 18,4 | 0,957 | 1,000 | 1,000 |

| $\psi^0_{sus}$ | $\alpha_{sus}$ | $\psi_{sus}$ |
|---|---|---|
| 0,880 | 0,000 | 1,000 |

| $N^0_{Rk,p}$ [kN] | $N_{Rk,p}$ [kN] | $\gamma_{Mp}$ | $N_{Rd,p}$ [kN] | $N_{Ed}$ [kN] |
|---|---|---|---|---|
| 491,510 | 1.000,241 | 1,500 | 666,827 | 430,165 |

| ID skupine sider |
|---|
| 1, 2, 4, 6, 7 |

Vhodne podatke in rezultate je potrebno preveriti glede skladnosti z obstoječimi pogoji in verodostojnosti!
PROFIS Engineering ( c ) 2003-2025 Hilti AG, FL-9494 Schaan Hilti je registrirana blagovna znamka Hilti AG, Schaan

| | | | |
|---|---|---|---|
| Podjetje: | RAZPON d.o.o. | Stran: | 6 |
| Naslov: | Tehnološki park 20, 1000 Ljubljana | Projektant: | Igor Gorup |
| Telefon I Faks: | +38616203366 \| | E-mail: | igor.gorup@razpon.si |
| Projektiranje: | Beton - 11. Juni 2025 (1) | Datum: | 13.06.2025 |
| Točka pritrjevanja: | Sidranje S2 | | |

### 1.3.3 Porušitev po konusu betona

$$N_{Ed} \le N_{Rd,c} = \frac{N_{Rk,c}}{\gamma_{Mc}}$$ EN 1992-4, Tabela 7.1

$$N_{Rk,c} = N^0_{Rk,c} \cdot \frac{A_{c,N}}{A^0_{c,N}} \cdot \psi_{s,N} \cdot \psi_{re,N} \cdot \psi_{ec1,N} \cdot \psi_{ec2,N} \cdot \psi_{M,N}$$ EN 1992-4, Enačba (7.1)

$$N^0_{Rk,c} = k_1 \cdot \sqrt{f_{ck}} \cdot h_{ef}^{1,5}$$ EN 1992-4, Enačba (7.2)

$$A^0_{c,N} = s_{cr,N} \cdot s_{cr,N}$$ EN 1992-4, Enačba (7.3)

$$\psi_{s,N} = 0{,}7 + 0{,}3 \cdot \frac{c}{c_{cr,N}} \le 1{,}00$$ EN 1992-4, Enačba (7.4)

$$\psi_{ec1,N} = \frac{1}{1 + \left(\frac{2 \cdot e_{N,1}}{s_{cr,N}}\right)} \le 1{,}00$$ EN 1992-4, Enačba (7.6)

$$\psi_{ec2,N} = \frac{1}{1 + \left(\frac{2 \cdot e_{N,2}}{s_{cr,N}}\right)} \le 1{,}00$$ EN 1992-4, Enačba (7.6)

$$\psi_{M,N} = 1$$ EN 1992-4, Enačba (7.7)

| $A_{c,N}$ [mm²] | $A^0_{c,N}$ [mm²] | $c_{cr,N}$ [mm] | $s_{cr,N}$ [mm] | $f_{c,cyl}$ [N/mm²] |
|---|---|---|---|---|
| 4.080.000 | 3.240.000 | 900,0 | 1.800,0 | 25,00 |

| $e_{c1,N}$ [mm] | $\psi_{ec1,N}$ | $e_{c2,N}$ [mm] | $\psi_{ec2,N}$ | $\psi_{s,N}$ | $\psi_{re,N}$ | z [mm] |
|---|---|---|---|---|---|---|
| 28,0 | 0,970 | 18,4 | 0,980 | 0,953 | 1,000 | 369,8 |

| $\psi_{M,N}$ | $k_1$ | $N^0_{Rk,c}$ [kN] | $\gamma_{Mc}$ | $N_{Rd,c}$ [kN] | $N_{Ed}$ [kN] |
|---|---|---|---|---|---|
| 1,000 | 7,700 | 565,832 | 1,500 | 430,400 | 430,165 |

| ID skupine sider |
|---|
| 1, 2, 4, 6, 7 |

Vhodne podatke in rezultate je potrebno preveriti glede skladnosti z obstoječimi pogoji in verodostojnosti!
PROFIS Engineering ( c ) 2003-2025 Hilti AG, FL-9494 Schaan Hilti je registrirana blagovna znamka Hilti AG, Schaan

| | | | |
|---|---|---|---|
| Podjetje: | RAZPON d.o.o. | Stran: | 7 |
| Naslov: | Tehnološki park 20, 1000 Ljubljana | Projektant: | Igor Gorup |
| Telefon I Faks: | +38616203366 \| | E-mail: | igor.gorup@razpon.si |
| Projektiranje: | Beton - 11. Juni 2025 (1) | Datum: | 13.06.2025 |
| Točka pritrjevanja: | Sidranje S2 | | |

### 1.4 Strižna obremenitev (EN 1992-4, Točka 7.2.2)

| | Obtežba [kN] | Kapaciteta [kN] | Izkoriščenost $\beta_V$ [%] | Status |
|---|---|---|---|---|
| Nosilnost jekla (brez nadvišanja)* | 4,680 | 179,520 | 3 | OK |
| Porušitev po jeklu (z nadvišanjem)* | N/A | N/A | N/A | N/A |
| Nosilnost na iztrga betona** | 26,624 | 1.012,257 | 3 | OK |
| Porušitev po robu betona v smeri y-** | 10,134 | 414,687 | 3 | OK |

*najbolj obremenjeno sidro **skupina sider (relevantna sidra)
When the input edge distance is set to "infinity", edge breakout verification is not performed in that direction

#### 1.4.1 Nosilnost jekla (brez nadvišanja)

$V_{Ed} \leq V_{Rd,s} = \frac{V_{Rk,s}}{\gamma_{Ms}}$ EN 1992-4, Tabela 7.2

$V_{Rk,s} = k_7 \cdot V^0_{Rk,s}$ EN 1992-4, Enačba (7.35)

| $V^0_{Rk,s}$ [kN] | $k_7$ | $V_{Rk,s}$ [kN] | $\gamma_{Ms}$ | $V_{Rd,s}$ [kN] | $V_{Ed}$ [kN] |
|---|---|---|---|---|---|
| 224,400 | 1,000 | 224,400 | 1,250 | 179,520 | 4,680 |

#### 1.4.2 Nosilnost na iztrga betona (merodajna nosilnost betona)

$V_{Ed} \leq V_{Rd,cp} = \frac{V_{Rk,cp}}{\gamma_{Mc,p}}$ EN 1992-4, Tabela 7.2

$V_{Rk,cp} = k_8 \cdot \min\{N_{Rk,c}; N_{Rk,p}\}$ EN 1992-4, Enačba (7.39c)

$N_{Rk,c} = N^0_{Rk,c} \cdot \frac{A_{c,N}}{A^0_{c,N}} \cdot \psi_{s,N} \cdot \psi_{re,N} \cdot \psi_{ec1,N} \cdot \psi_{ec2,N} \cdot \psi_{M,N}$ EN 1992-4, Enačba (7.1)

$N^0_{Rk,c} = k_1 \cdot \sqrt{f_{ck}} \cdot h_{ef}^{1,5}$ EN 1992-4, Enačba (7.2)

$A^0_{c,N} = s_{cr,N} \cdot s_{cr,N}$ EN 1992-4, Enačba (7.3)

$\psi_{s,N} = 0,7 + 0,3 \cdot \frac{c}{c_{cr,N}} \leq 1,00$ EN 1992-4, Enačba (7.4)

$\psi_{ec1,N} = \frac{1}{1 + \left(\frac{2 \cdot e_{V,1}}{s_{cr,N}}\right)} \leq 1,00$ EN 1992-4, Enačba (7.6)

$\psi_{ec2,N} = \frac{1}{1 + \left(\frac{2 \cdot e_{V,2}}{s_{cr,N}}\right)} \leq 1,00$ EN 1992-4, Enačba (7.6)

$\psi_{M,N} = 1$ EN 1992-4, Enačba (7.7)

| $A_{c,N}$ [mm²] | $A^0_{c,N}$ [mm²] | $c_{cr,N}$ [mm] | $s_{cr,N}$ [mm] | $k_8$ | $f_{c,cyl}$ [N/mm²] |
|---|---|---|---|---|---|
| 4.560.000 | 3.240.000 | 900,0 | 1.800,0 | 2,000 | 25,00 |

| $e_{c1,V}$ [mm] | $\psi_{ec1,N}$ | $e_{c2,V}$ [mm] | $\psi_{ec2,N}$ | $\psi_{s,N}$ | $\psi_{re,N}$ | $\psi_{M,N}$ |
|---|---|---|---|---|---|---|
| 0,0 | 1,000 | 0,0 | 1,000 | 0,953 | 1,000 | 1,000 |

| $k_1$ | $N^0_{Rk,c}$ [kN] | $\gamma_{Mc,p}$ | $V_{Rd,cp}$ [kN] | $V_{Ed}$ [kN] |
|---|---|---|---|---|
| 7,700 | 565,832 | 1,500 | 1.012,257 | 26,624 |

| ID skupine sider |
|---|
| 1-8 |

Vhodne podatke in rezultate je potrebno preveriti glede skladnosti z obstoječimi pogoji in verodostojnosti!
PROFIS Engineering ( c ) 2003-2025 Hilti AG, FL-9494 Schaan Hilti je registrirana blagovna znamka Hilti AG, Schaan

| | | | |
|---|---|---|---|
| Podjetje: | RAZPON d.o.o. | Stran: | 8 |
| Naslov: | Tehnološki park 20, 1000 Ljubljana | Projektant: | Igor Gorup |
| Telefon I Faks: | +38616203366 \| | E-mail: | igor.gorup@razpon.si |
| Projektiranje: | Beton - 11. Juni 2025 (1) | Datum: | 13.06.2025 |
| Točka pritrjevanja: | Sidranje S2 | | |

### 1.4.3 Porušitev po robu betona v smeri y-

$$V_{Ed} \le V_{Rd,c} = \frac{V_{Rk,c}}{\gamma_{Mc}}$$ EN 1992-4, Tabela 7.2

$$V_{Rk,c} = k_T \cdot V^0_{Rk,c} \cdot \frac{A_{c,V}}{A^0_{c,V}} \cdot \psi_{s,V} \cdot \psi_{h,V} \cdot \psi_{\alpha,V} \cdot \psi_{ec,V} \cdot \psi_{re,V}$$ EN 1992-4, Enačba (7.40)

$$V^0_{Rk,c} = k_9 \cdot d_{nom}^{\alpha} \cdot l_f^{\beta} \cdot \sqrt{f_{ck}} \cdot c_1^{1,5}$$ EN 1992-4, Enačba (7.41)

$$\alpha = 0,1 \cdot \left(\frac{l_f}{c_1}\right)^{0,5}$$ EN 1992-4, Enačba (7.42)

$$\beta = 0,1 \cdot \left(\frac{d_{nom}}{c_1}\right)^{0,2}$$ EN 1992-4, Enačba (7.43)

$$A^0_{c,V} = 4,5 \cdot c_1^2$$ EN 1992-4, Enačba (7.44)

$$\psi_{s,V} = 0,7 + 0,3 \cdot \frac{c_2}{1,5 \cdot c_1} \le 1,00$$ EN 1992-4, Enačba (7.45)

$$\psi_{h,V} = \left(\frac{1,5 \cdot c_1}{h}\right)^{0,5} \ge 1,00$$ EN 1992-4, Enačba (7.46)

$$\psi_{ec,V} = \frac{1}{1 + \left(\frac{2 \cdot e_V}{3 \cdot c_1}\right)} \le 1,00$$ EN 1992-4, Enačba (7.47)

$$\psi_{\alpha,V} = \sqrt{\frac{1}{(\cos \alpha_V)^2 + (0,5 \cdot \sin \alpha_V)^2}} \ge 1,00$$ EN 1992-4, Enačba (7.48)

| $l_f$ [mm] | $d_{nom}$ [mm] | $k_9$ | $\alpha$ | $\beta$ | $f_{c,cyl}$ [N/mm$^2$] | $c_1$ [mm] |
|---|---|---|---|---|---|---|
| 240,0 | 30,00 | 1,700 | 0,056 | 0,052 | 25,00 | 760,0 |

| $A_{c,V}$ [mm$^2$] | $A^0_{c,V}$ [mm$^2$] | $\psi_{s,V}$ | $\psi_{h,V}$ | $e_{c,V}$ [mm] | $\psi_{ec,V}$ |
|---|---|---|---|---|---|
| 2.580.000 | 2.599.200 | 0,953 | 1,068 | 11,2 | 0,990 |

| $\alpha_V$ [°] | $\psi_{\alpha,V}$ | $\psi_{re,V}$ |
|---|---|---|
| 61,75 | 1,547 | 1,400 |

| $V^0_{Rk,c}$ [kN] | $k_T$ | $\gamma_{Mc}$ | $V_{Rd,c}$ [kN] | $V_{Ed}$ [kN] |
|---|---|---|---|---|
| 287,309 | 1,0 | 1,500 | 414,687 | 10,134 |

| ID skupine sider |
|---|
| 1-3 |

When the input edge distance is set to "infinity", edge breakout verification is not performed in that direction

Vhodne podatke in rezultate je potrebno preveriti glede skladnosti z obstoječimi pogoji in verodostojnosti!
PROFIS Engineering ( c ) 2003-2025 Hilti AG, FL-9494 Schaan Hilti je registrirana blagovna znamka Hilti AG, Schaan

| | | | |
|---|---|---|---|
| Podjetje: | RAZPON d.o.o. | Stran: | 9 |
| Naslov: | Tehnološki park 20, 1000 Ljubljana | Projektant: | Igor Gorup |
| Telefon I Faks: | +38616203366 \| | E-mail: | igor.gorup@razpon.si |
| Projektiranje: | Beton - 11. Juni 2025 (1) | Datum: | 13.06.2025 |
| Točka pritrjevanja: | Sidranje S2 | | |

### 1.5 Kombinacija nateznih in strižnih obremenitev (EN 1992-4-4, del 7.2.3)

Porušitev jekla

| $\beta_N$ | $\beta_V$ | $\alpha$ | Izkoriščenost $\beta_{N,V}$ [%] | Status |
|---|---|---|---|---|
| 0,620 | 0,026 | 2,000 | 39 | OK |

$\beta_N^{\alpha} + \beta_V^{\alpha} \leq 1{,}0$

Porušitev betona

| $\beta_N$ | $\beta_V$ | $\alpha$ | Izkoriščenost $\beta_{N,V}$ [%] | Status |
|---|---|---|---|---|
| 0,999 | 0,026 | 1,000 | 86 | OK |

$(\beta_N + \beta_V) / 1.2 \leq 1{,}0$

### 1.6 Opozorila

- Projektne metode v programski opremi PROFIS Engineering zahtevajo uporabo absolutno toge ležiščne pločevine v skladu z regulativami (ETAG 001/Annex C, EOTA TR029, itd.). To pomeni, da se porazdelitev obremenitve na sidra zaradi elastičnih deformacij sidrne plošče ne upošteva - predpostavlja se, da je ležiščna pločevina toga, da se ne deformira, v primeru delovanja projektne obtežbe. PROFIS Engineering izračuna najmanjšo potrebno debelino ležiščne pločevine s CBFEM metodo za omejitev napetosti v ležiščni pločevini na podlagi zgornjih predpostavk. PROFIS Engineering ne dokazuje, da je predpostavka o togi ležiščni pločevini pravilna. Vhodne podatke in rezultate je potrebno preveriti, da so v skladu z obstoječimi pogoji in verodostojnosti!
- The equations presented in this report are based on metric units. When inputs are displayed in imperial units, the user should be aware that the equations remain in their metric format.
- Potrebno je opraviti kontrolo prenosa obtežbe v osnovni material po EN 1992-4, Dodatek A!
- Pozor! V primeru tlačne sile, ki deluje na sidra, je potrebno posebej opraviti še dve kontroli in sicer kontrolo uklona in lokalni vnos obtežbe v osnovni material.
- Izračun je veljaven samo v primeru, če luknja v ležiščni pločevini ni večja od vrednosti podane v Tabeli 6.1 of EN 1992-4!! Za večje premere izvrtin glej točko 6.2.2 of EN 1992-4!
- Seznam dodatne opreme v tem poročilu je samo za informacije uporabnika. V vsakem primeru je potrebno upoštevati navodila za uporabo, ki so priložena izdelku, da zagotovite pravilno vgradnjo.
- For the determination of the $\psi_{re,v}$ (concrete edge failure) the minimum concrete cover defined in the design settings is used as the concrete cover of the edge reinforcement.
- Karakteristična sprijena trdnost je odvisna od kratkotrajnih in dolgotrajnih temperaturnih obremenitev.
- Armiranje roba betona ni potrebno, da se izognemo cepitvi betona
- Izračun je veljaven samo v primeru zapolnitev vrzeli, po EN 1992-4 Tabela 6.1
- Load transfer from supplementary reinforcement to the structural member shall be verified by the responsible structural engineer.
- With supplementary reinforcement and post-installed anchors, please ensure that in the jobsite the rebars are not drilled through.
- Metode projektiranja v programu PROFIS Engineering zahtevajo upoštevanje toge ležiščne pločevine, skladno z veljavnimi predpisi (ETAG 001/Dodatek C, EOTA TR029, itd.). To pomeni, da je ležiščna pločevina absolutno toga in prepreči prerazporeditev obtežbe na sidra zaradi elastičnih/plastičnih pomikov. Uporabnik sprejme, da se ležiščna pločevina po inženirski presoji upošteva kot skoraj toga.
- Karakteristična sprijemna trdnost je odvisna od povratne dobe (servisna doba v letih): 50


PROFIS Engineering ( c ) 2003-2025 Hilti AG, FL-9494 Schaan Hilti je registrirana blagovna znamka Hilti AG, Schaan

| | | | |
|---|---|---|---|
| Podjetje: | RAZPON d.o.o. | Stran: | 10 |
| Naslov: | Tehnološki park 20, 1000 Ljubljana | Projektant: | Igor Gorup |
| Telefon I Faks: | +38616203366 \| | E-mail: | igor.gorup@razpon.si |
| Projektiranje: | Beton - 11. Juni 2025 (1) | Datum: | 13.06.2025 |
| Točka pritrjevanja: | Sidranje S2 | | |

### 1.7 Podatki za vgradnjo

Ležišćna pločevina, jeklo: S 355; E = 210.000,00 N/mm$^2$; $f_{yk}$ = 355,00 N/mm$^2$
Profil: IPB/HEB, IPB 260 / HE 260 B; (L x W x T x FT) = 260,0 mm x 260,0 mm x 10,0 mm x 17,5 mm

Premer luknje v ležišćni plošči: $d_f$ = 33,0 mm

Debelina ležišćne pločevine (vnos): 40,0 mm

Metoda vrtanja: Udarno vrtanje
Čiščenje: Potrebno je čiščenje izvrtine z uporabo stisnjenega zraka v skladu z navodili za uporabo.

Tip in velikost sidra: HIT-RE 500 V4 + HAS Meter 8.8 M30
Številka artikla: 2390172 HAS 8.8 M30x1000 (element) / 2287557 HIT-RE 500 V4 (kemično sidro)

Maximum installation torque: 300 Nm

Globina izvrtine v osnovnem materialu: 35,0 mm

Globina izvrtine v osnovnem materialu: 600,0 mm

Minimalna debelina osnovnega materiala: 670,0 mm

Hilti AM 8.8 threaded rod with HIT-RE 500 V4 injection mortar with 600 mm embedment hef, M30, Steel galvanized, Hammer drill bit installation per ETA 20/0541, with annular gaps filled with Hilti Dynamic set or any suitable gap solutions

#### 1.7.1 Priporočeni dodatki

| Vrtanje | Čiščenje | Vgradnja |
|---|---|---|
| • Primerno vrtalno udarno kladivo<br>• Ustrezen sveder | • Zahtevano izpihovanje s komprimiranim zrakom in ustreznimi pripomočki, za izpihovanje prahu iz dna izvrtine.<br>• Okrogla jeklena ščetka ustreznega premera | • Dozirnik s kaseto in mešalcem<br>• Momentni ključ |

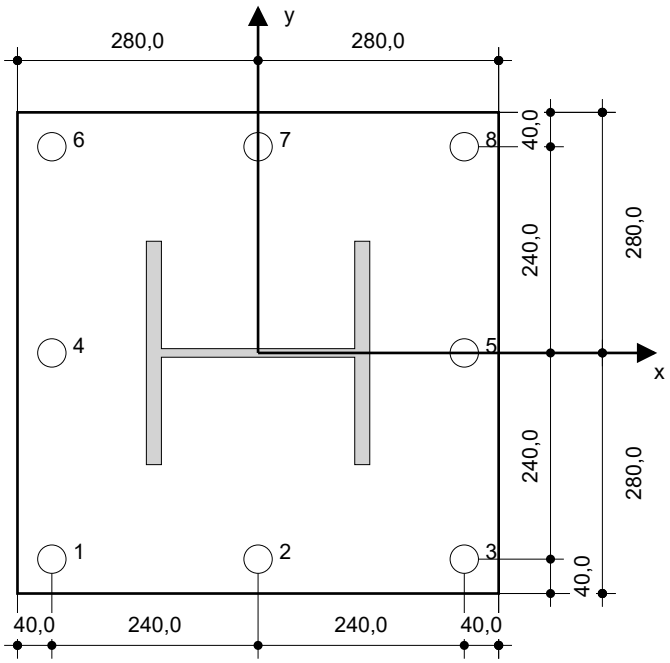


**Koordinate sidra [mm]**

| Sidro | x | y | $c_{-x}$ | $c_{+x}$ | $c_{-y}$ | $c_{+y}$ |
|---|---|---|---|---|---|---|
| 1 | −240,0 | −240,0 | 960,0 | - | 760,0 | 1.240,0 |
| 2 | 0,0 | −240,0 | 1.200,0 | - | 760,0 | 1.240,0 |
| 3 | 240,0 | −240,0 | 1.440,0 | - | 760,0 | 1.240,0 |
| 4 | −240,0 | 0,0 | 960,0 | - | 1.000,0 | 1.000,0 |

| Sidro | x | y | $c_{-x}$ | $c_{+x}$ | $c_{-y}$ | $c_{+y}$ |
|---|---|---|---|---|---|---|
| 5 | 240,0 | 0,0 | 1.440,0 | - | 1.000,0 | 1.000,0 |
| 6 | −240,0 | 240,0 | 960,0 | - | 1.240,0 | 760,0 |
| 7 | 0,0 | 240,0 | 1.200,0 | - | 1.240,0 | 760,0 |
| 8 | 240,0 | 240,0 | 1.440,0 | - | 1.240,0 | 760,0 |

Vhodne podatke in rezultate je potrebno preveriti glede skladnosti z obstoječimi pogoji in verodostojnosti!
PROFIS Engineering ( c ) 2003-2025 Hilti AG, FL-9494 Schaan Hilti je registrirana blagovna znamka Hilti AG, Schaan

| | | | |
|---|---|---|---|
| Podjetje: | RAZPON d.o.o. | Stran: | 11 |
| Naslov: | Tehnološki park 20, 1000 Ljubljana | Projektant: | Igor Gorup |
| Telefon I Faks: | +38616203366 \| | E-mail: | igor.gorup@razpon.si |
| Projektiranje: | Beton - 11. Juni 2025 (1) | Datum: | 13.06.2025 |
| Točka pritrjevanja: | Sidranje S2 | | |

# 2 Izračun ležiščne pločevine

### 2.1 Vhodni podatki

| | |
|---|---|
| Ležiščna pločevina: | Oblika: Pravokotna<br>$l_x$ x $l_y$ x t = 560,0 mm x 560,0 mm x 40,0 mm<br>Izračun: FEM<br>Material: S 355; $F_y$ = 355,00 N/mm²; $\varepsilon_{lim}$ = 5,00% |
| Tip in velikost sidra: | HIT-RE 500 V4 + HAS Meter 8.8 M30, $h_{ef}$ = 600,0 mm |
| Togost sidra: | Sidro je modelirano z upoštevanjem togosti določene iz grafov obremenitev-deformacija, na podlagi testov v neodvisnih laboratorijih. Upoštevajte, da enostavna zamenjava sidra ni mogoča, saj togost sidra močno vpliva na rezultate porazdelitve obtežbe. |
| Projektna metoda: | EN-based design uporaba MKE z upoštevanjem posameznih komponent |
| Vgradnja z nadvišanjem: | $e_b$ = 0,0 mm (No stand-off); t = 40,0 mm |
| Profil: | IPB 260 / HE 260 B; (L x W x T x FT) = 260,0 mm x 260,0 mm x 10,0 mm x 17,5 mm<br>Material: S 355; $F_y$ = 355,00 N/mm²; $\varepsilon_{lim}$ = 5,00%<br>Ekscentričnost x: 0,0 mm<br>Ekscentričnost y: 0,0 mm |
| Osnovni material: | Cracked concrete; C25/30; $f_{c,cyl}$ = 25,00 N/mm²; h = 1.000,0 mm; E = 31.000,00 N/mm²; G = 12.916,67 N/mm²; v = 0,20 |
| Zvari (profil na ležiščno pločevino): | Tip razporeditve: Plastičen<br>Material: S 355 |
| Toge ojačitve: | Geometrija: Chamfered; velikost = $l_x$ x $l_y$ x t = 240,0 mm x 100,0 mm x 15,0 mm<br>Material: S 355; $F_y$ = 355,00 N/mm²; $\varepsilon_{lim}$ = 5,00% |
| Zvari (toge ojačitve na profil/ležiščno ploščo): | Tip razporeditve: Plastičen<br>Material: S 355 |
| Velikost mreže: | Število elementov na robu: 8<br>Min. velikost elementa: 10,0 mm<br>Maks. velikost elementa: 50,0 mm |

### 2.2 Povzetek

| | Opis | Profil | | Toge ojačitve | | Ležiščna pločevina | | | Zvari [%] | Beton [%] |
|---|---|---|---|---|---|---|---|---|---|---|
| | | $\sigma_{Ed}$ [N/mm²] | $\varepsilon_{Pl}$ [%] | $\sigma_{Ed}$ [N/mm²] | $\varepsilon_{Pl}$ [%] | $\sigma_{Ed}$ [N/mm²] | $\varepsilon_{Pl}$ [%] | Nosilnost pločevine na bočni pritisk v območju luknje [%] | | |
| 1 | Kombination 1 | 152,93 | 0,00 | 220,19 | 0,00 | 133,37 | 0,00 | 1 | 99 | 10 |

### 2.3 Klasifikacija ležiščne pločevine

Spodnji rezultati so prikazani za merodajno obtežno kombinacijo: Kombination 1

| Natezne sile v sidru | Ekvivalentno toga ležiščna pločevina (FEM) | Projektiranje z upoštevanjem podajne ležiščne pločevine (FEM) |
|---|---|---|
| Sidro 1 | 99,522 kN | 55,442 kN |
| Sidro 2 | 24,958 kN | 50,476 kN |
| Sidro 3 | −0,008 kN | −0,004 kN |
| Sidro 4 | 107,855 kN | 185,355 kN |
| Sidro 5 | −0,007 kN | −0,011 kN |
| Sidro 6 | 116,174 kN | 67,451 kN |
| Sidro 7 | 41,611 kN | 71,441 kN |
| Sidro 8 | −0,006 kN | −0,003 kN |

Uporabnik je sprejel, da je obnašanje ležiščne pločevine 100 % togo, po svoji inženirski presoji.To pomeni, da so lahko uporabljene smernice za dimenzioniranje sider.

Vhodne podatke in rezultate je potrebno preveriti glede skladnosti z obstoječimi pogoji in verodostojnosti!
PROFIS Engineering ( c ) 2003-2025 Hilti AG, FL-9494 Schaan Hilti je registrirana blagovna znamka Hilti AG, Schaan

| | | | |
|---|---|---|---|
| Podjetje: | RAZPON d.o.o. | Stran: | 12 |
| Naslov: | Tehnološki park 20, 1000 Ljubljana | Projektant: | Igor Gorup |
| Telefon I Faks: | +38616203366 \| | E-mail: | igor.gorup@razpon.si |
| Projektiranje: | Beton - 11. Juni 2025 (1) | Datum: | 13.06.2025 |
| Točka pritrjevanja: | Sidranje S2 | | |

### 2.4 Profil/Toge ojačitve/Ležiščna pločevina

Profil in jeklene toge ojačitve so preverjene na ravni povezave jekla z betonom. Projektiranje detajla ne nadomesti projektiranja kritičnega jeklenega prereza, tovrstni izračun mora biti preverjen z drugim programom in ne PROFIS Engineering-om.

#### 2.4.1 Nadomestna napetost in plastična deformacija

Kriterij mejnega stanja po EN1993-1-5 Dodatek C.8, (1) 2.

**Rezultati**

| Del | Obtežna kombinacija | Material | $\sigma_{Ed}$ [N/mm²] | $\varepsilon_{Pl}$ [%] | $f_y$ [N/mm²] | $\gamma_{M0}$ | $f_y/\gamma_{M0}$ [N/mm²] | $\varepsilon_{lim}$ [%] | Status |
|---|---|---|---|---|---|---|---|---|---|
| Ležiščna pločevina | Kombination 1 | S 355 | 133,37 | 0,00 | 355,00 | 1,00 | 355,00 | 5,00 | OK |
| Profil | Kombination 1 | S 355 | 113,29 | 0,00 | 355,00 | 1,00 | 355,00 | 5,00 | OK |
| Profil | Kombination 1 | S 355 | 152,93 | 0,00 | 355,00 | 1,00 | 355,00 | 5,00 | OK |
| Profil | Kombination 1 | S 355 | 110,40 | 0,00 | 355,00 | 1,00 | 355,00 | 5,00 | OK |
| Stiffenera | Kombination 1 | S 355 | 70,48 | 0,00 | 355,00 | 1,00 | 355,00 | 5,00 | OK |
| Stiffenerb | Kombination 1 | S 355 | 41,16 | 0,00 | 355,00 | 1,00 | 355,00 | 5,00 | OK |
| Stiffenerc | Kombination 1 | S 355 | 126,94 | 0,00 | 355,00 | 1,00 | 355,00 | 5,00 | OK |
| Stiffenerd | Kombination 1 | S 355 | 158,33 | 0,00 | 355,00 | 1,00 | 355,00 | 5,00 | OK |
| Stiffenere | Kombination 1 | S 355 | 220,19 | 0,00 | 355,00 | 1,00 | 355,00 | 5,00 | OK |
| Stiffenerf | Kombination 1 | S 355 | 97,70 | 0,00 | 355,00 | 1,00 | 355,00 | 5,00 | OK |

Vhodne podatke in rezultate je potrebno preveriti glede skladnosti z obstoječimi pogoji in verodostojnosti!
PROFIS Engineering ( c ) 2003-2025 Hilti AG, FL-9494 Schaan Hilti je registrirana blagovna znamka Hilti AG, Schaan

| | | | |
|---|---|---|---|
| Podjetje: | RAZPON d.o.o. | Stran: | 13 |
| Naslov: | Tehnološki park 20, 1000 Ljubljana | Projektant: | Igor Gorup |
| Telefon I Faks: | +38616203366 \| | E-mail: | igor.gorup@razpon.si |
| Projektiranje: | Beton - 11. Juni 2025 (1) | Datum: | 13.06.2025 |
| Točka pritrjevanja: | Sidranje S2 | | |

#### 2.4.1.1 Nadomestna napetost

Spodnji rezultati so prikazani za merodajno obtežno kombinacijo: 1 - Kombination 1

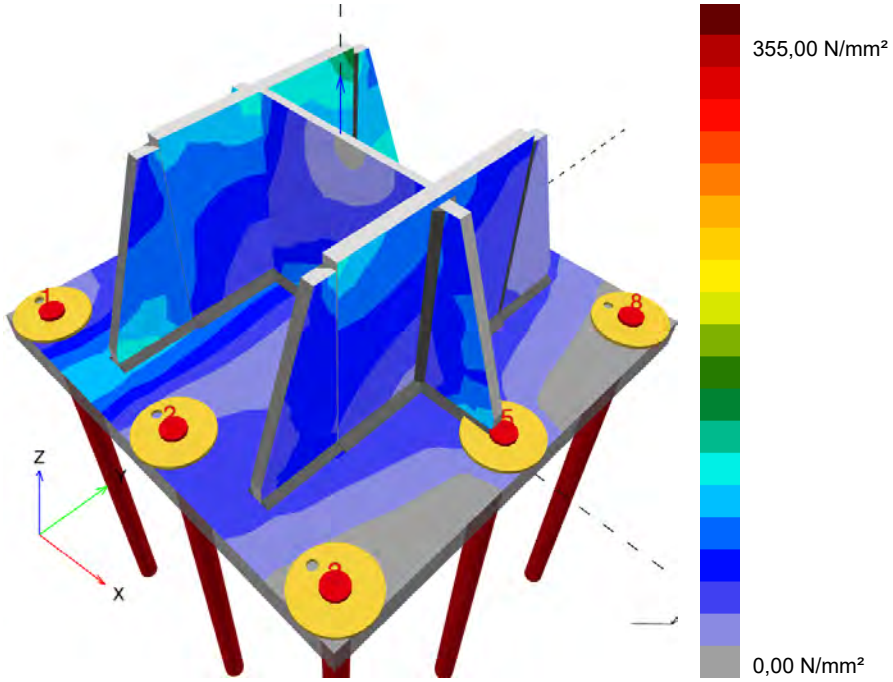


#### 2.4.1.2 Napetost na meji plastičnosti

Spodnji rezultati so prikazani za merodajno obtežno kombinacijo: 1 - Kombination 1

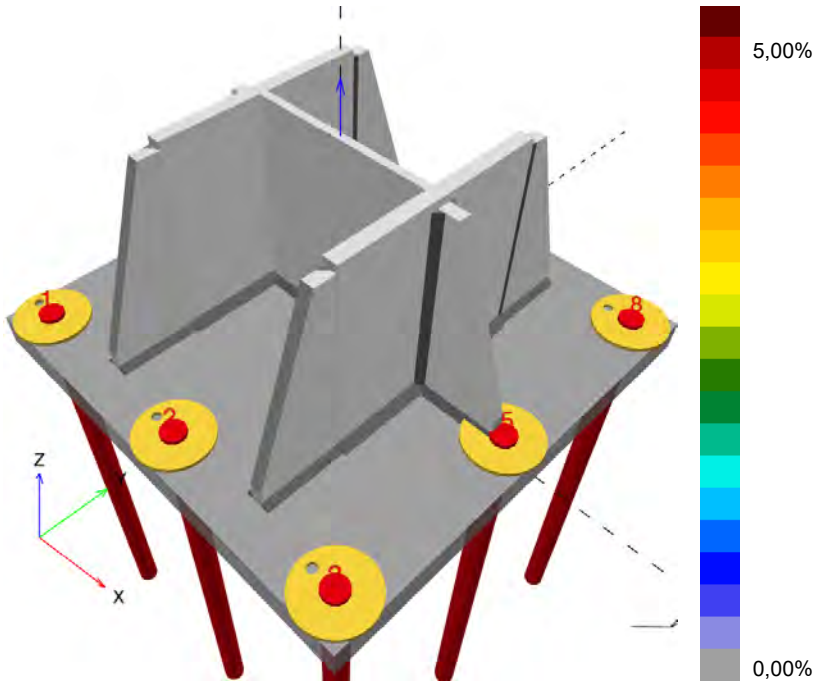


Vhodne podatke in rezultate je potrebno preveriti glede skladnosti z obstoječimi pogoji in verodostojnosti!
PROFIS Engineering ( c ) 2003-2025 Hilti AG, FL-9494 Schaan Hilti je registrirana blagovna znamka Hilti AG, Schaan

| | | | |
|---|---|---|---|
| Podjetje: | RAZPON d.o.o. | Stran: | 14 |
| Naslov: | Tehnološki park 20, 1000 Ljubljana | Projektant: | Igor Gorup |
| Telefon I Faks: | +38616203366 \| | E-mail: | igor.gorup@razpon.si |
| Projektiranje: | Beton - 11. Juni 2025 (1) | Datum: | 13.06.2025 |
| Točka pritrjevanja: | Sidranje S2 | | |

### 2.4.2 Nosilnost pločevine na bočni pritisk v območju luknje

Merodajna obtežna kombinacija: 1 - Kombination 1

Nosilnost pločevine na bočni pritisk, EN1993-1 - 8 točka 3.6.1:

**Enačbe**

$$F_{b,Rd} = \frac{k_1 \, a_b \, f_u \, d \, t}{\gamma_{M2}}$$

$$\text{Izkoriščenost} = \frac{V_{Ed}}{F_{b,Rd}}$$

**Spremenljivke**

| | $k_1$ | $a_b$ | $f_u$ [N/mm²] | d [mm] | t [mm] | $\gamma_{M2}$ |
|---|---|---|---|---|---|---|
| Sidro 1 | 1,73 | 0,41 | 490,00 | 30,0 | 40,0 | 1.25 |
| Sidro 2 | 1,71 | 1,00 | 490,00 | 30,0 | 40,0 | 1.25 |
| Sidro 3 | 1,82 | 1,00 | 490,00 | 30,0 | 40,0 | 1.25 |
| Sidro 4 | 2,50 | 0,41 | 490,00 | 30,0 | 40,0 | 1.25 |
| Sidro 5 | 2,50 | 1,00 | 490,00 | 30,0 | 40,0 | 1.25 |
| Sidro 6 | 2,06 | 0,45 | 490,00 | 30,0 | 40,0 | 1.25 |
| Sidro 7 | 1,88 | 1,00 | 490,00 | 30,0 | 40,0 | 1.25 |
| Sidro 8 | 1,71 | 1,00 | 490,00 | 30,0 | 40,0 | 1.25 |

**Rezultati**

| | $V_{Ed}$ [kN] | $F_{b,Rd}$ [kN] | Izkoriščenost [%] | Status |
|---|---|---|---|---|
| Sidro 1 | 3,209 | 332,394 | 1 | OK |
| Sidro 2 | 2,771 | 803,116 | 1 | OK |
| Sidro 3 | 3,104 | 855,962 | 1 | OK |
| Sidro 4 | 4,680 | 478,146 | 1 | OK |
| Sidro 5 | 3,794 | 1.176,000 | 1 | OK |
| Sidro 6 | 3,575 | 432,517 | 1 | OK |
| Sidro 7 | 2,889 | 883,201 | 1 | OK |
| Sidro 8 | 2,972 | 802,215 | 1 | OK |

### 2.5 Zvari

Profili so modelirani brez upoštevanja kotnega radija. Posebna pravila varjenja (kot naprimer: hladno valjani profili...) niso upoštevana v programu.

### 2.5.1 Ležiščna pločevina na profil

Merodajna obtežna kombinacija: 1 - Kombination 1

Izračun zvarov, EN1993-1-8 točka 4.5.3.2

Minimalna debelina zvara na stojini ($a_{min}$): 5,8 mm

Minimalna debelina zvara na pasnici ($a_{min}$): 5,8 mm

Vhodne podatke in rezultate je potrebno preveriti glede skladnosti z obstoječimi pogoji in verodostojnosti!
PROFIS Engineering ( c ) 2003-2025 Hilti AG, FL-9494 Schaan Hilti je registrirana blagovna znamka Hilti AG, Schaan

| | | | |
|---|---|---|---|
| Podjetje: | RAZPON d.o.o. | Stran: | 15 |
| Naslov: | Tehnološki park 20, 1000 Ljubljana | Projektant: | Igor Gorup |
| Telefon I Faks: | +38616203366 \| | E-mail: | igor.gorup@razpon.si |
| Projektiranje: | Beton - 11. Juni 2025 (1) | Datum: | 13.06.2025 |
| Točka pritrjevanja: | Sidranje S2 | | |

**Enačbe**

$$\sigma_{w,Ed} = (\sigma_{\perp}^2 + 3(\tau_{\perp}^2 + \tau_{||}^2))^{0.5}$$

$$\sigma_{w,Rd} = \frac{f_u}{\beta_w \gamma_{M2}}$$

$$\sigma_{\perp,Rd} = 0.9\frac{f_u}{\gamma_{M2}}$$

$$\text{Izkoriščenost} = \max\left(\frac{\sigma_{w,Ed}}{\sigma_{w,Rd}}; \frac{|\sigma_{\perp}|}{\sigma_{\perp,Rd}}\right)$$

**Spremenljivke**

| Zvar | $\beta_w$ | $f_u$ [N/mm²] | $\gamma_{M2}$ |
|---|---|---|---|
| Stojina | 0,90 | 490,00 | 1,25 |
| Pasnica | 0,90 | 490,00 | 1,25 |

| Rob | a [mm] | L [mm] | $\varepsilon_{Pl}$ [%] | $\sigma_{\perp}$ [N/mm²] | $\tau_{||}$ [N/mm²] | $\tau_{\perp}$ [N/mm²] |
|---|---|---|---|---|---|---|
| Member 1-bfl 1 | ◢8,0◣ | 260,0 | 0,00 | −25,24 | −8,43 | −25,09 |
| Member 1-bfl | ◢8,0◣ | 260,0 | 0,00 | −28,25 | −15,50 | 28,40 |
| Member 1-tfl 1 | ◢8,0◣ | 260,0 | 0,00 | 26,37 | 26,45 | 23,93 |
| Member 1-tfl | ◢8,0◣ | 260,0 | 0,00 | 17,92 | −13,21 | −20,38 |
| Member 1-w 1 | ◢6,0◣ | 242,5 | 0,00 | −4,57 | 57,15 | −4,67 |
| Member 1-w | ◢6,0◣ | 242,5 | 0,00 | −4,70 | −55,32 | 4,59 |

**Rezultati**

| Rob | $\sigma_{w,Ed}$ [N/mm²] | $\sigma_{w,Rd}$ [N/mm²] | $\sigma_{\perp,Rd}$ [N/mm²] | Izkoriščenost [%] | Izkoriščenost$_c$ [%] | Status |
|---|---|---|---|---|---|---|
| Member 1-bfl 1 | 52,34 | 435,56 | 352,80 | 13 | 10 | OK |
| Member 1-bfl | 62,76 | 435,56 | 352,80 | 15 | 12 | OK |
| Member 1-tfl 1 | 67,16 | 435,56 | 352,80 | 16 | 12 | OK |
| Member 1-tfl | 45,72 | 435,56 | 352,80 | 11 | 8 | OK |
| Member 1-w 1 | 99,42 | 435,56 | 352,80 | 23 | 19 | OK |
| Member 1-w | 96,25 | 435,56 | 352,80 | 23 | 18 | OK |

### 2.5.2 Jeklena toga ojačitev na profil/ležiščno pločevino

Merodajna obtežna kombinacija: 1 - Kombination 1

Izračun zvarov, EN1993-1-8 točka 4.5.3.2

Minimalna debelina zvara jeklene toge ojačitve na pasnico profila ($a_{min}$): 3,7 mm

Minimalna debelina zvara jeklene toge ojačitve na ležiščno pločevino ($a_{min}$): 5,8 mm

**Enačbe**

$$\sigma_{w,Ed} = (\sigma_{\perp}^2 + 3(\tau_{\perp}^2 + \tau_{||}^2))^{0.5}$$

$$\sigma_{w,Rd} = \frac{f_u}{\beta_w \gamma_{M2}}$$

$$\sigma_{\perp,Rd} = 0.9\frac{f_u}{\gamma_{M2}}$$

$$\text{Izkoriščenost} = \max\left(\frac{\sigma_{w,Ed}}{\sigma_{w,Rd}}; \frac{|\sigma_{\perp}|}{\sigma_{\perp,Rd}}\right)$$

Vhodne podatke in rezultate je potrebno preveriti glede skladnosti z obstoječimi pogoji in verodostojnosti!
PROFIS Engineering ( c ) 2003-2025 Hilti AG, FL-9494 Schaan Hilti je registrirana blagovna znamka Hilti AG, Schaan

| | | | |
|---|---|---|---|
| Podjetje: | RAZPON d.o.o. | Stran: | 16 |
| Naslov: | Tehnološki park 20, 1000 Ljubljana | Projektant: | Igor Gorup |
| Telefon I Faks: | +38616203366 \| | E-mail: | igor.gorup@razpon.si |
| Projektiranje: | Beton - 11. Juni 2025 (1) | Datum: | 13.06.2025 |
| Točka pritrjevanja: | Sidranje S2 | | |

**Spremenljivke**

| $\beta_w$ | $f_u$ [N/mm²] | $\gamma_{M2}$ |
|---|---|---|
| 0,90 | 490,00 | 1,25 |

| Rob | a [mm] | L [mm] | $\varepsilon_{Pl}$ [%] | $\sigma_{\perp}$ [N/mm²] | $\tau_{\parallel}$ [N/mm²] | $\tau_{\perp}$ [N/mm²] |
|---|---|---|---|---|---|---|
| Stiffenera | ◢6,0◣ | 100,0 | 0,00 | −40,42 | −3,10 | −36,89 |
| Stiffenera 1 | ◢6,0◣ | 100,0 | 0,00 | −45,18 | −22,53 | 48,71 |
| Stiffenerb | ◢6,0◣ | 100,0 | 0,00 | −30,01 | 18,37 | −34,58 |
| Stiffenerb 1 | ◢6,0◣ | 100,0 | 0,00 | −27,69 | 7,10 | 23,12 |
| Stiffenerc | ◢6,0◣ | 100,0 | 0,00 | 103,31 | −81,80 | 95,12 |
| Stiffenerc 1 | ◢6,0◣ | 100,0 | 0,00 | 88,81 | 68,62 | −96,87 |
| Stiffenerd | ◢6,0◣ | 100,0 | 0,00 | 121,07 | −94,48 | 129,28 |
| Stiffenerd 1 | ◢6,0◣ | 100,0 | 0,00 | 135,45 | 108,07 | −127,06 |
| Stiffenere (Anchor plate) | ◢6,0◣ | 100,0 | 0,21 | 174,78 | −143,47 | 173,40 |
| Stiffenere (Anchor plate) 1 | ◢6,0◣ | 100,0 | 0,21 | 173,41 | 142,46 | −174,68 |
| Stiffenerf (Anchor plate) | ◢6,0◣ | 100,0 | 0,00 | −91,93 | 74,08 | −90,08 |
| Stiffenerf (Anchor plate) 1 | ◢6,0◣ | 100,0 | 0,00 | −89,65 | −71,75 | 91,44 |
| Stiffenere (Member 1-tfl 1) | ◢6,0◣ | 240,0 | 0,00 | 42,90 | 124,99 | 43,94 |
| Stiffenere (Member 1-tfl 1) 1 | ◢6,0◣ | 240,0 | 0,00 | 44,00 | −125,94 | −42,99 |
| Stiffenerf (Member 1-bfl 1) | ◢6,0◣ | 240,0 | 0,00 | −33,00 | −84,46 | −33,52 |
| Stiffenerf (Member 1-bfl 1) 1 | ◢6,0◣ | 240,0 | 0,00 | −33,36 | 84,65 | 32,81 |

**Rezultati**

| Rob | $\sigma_{w,Ed}$ [N/mm²] | $\sigma_{w,Rd}$ [N/mm²] | $\sigma_{\perp,Rd}$ [N/mm²] | Izkoriščenost [%] | Izkoriščenost$_c$ [%] | Status |
|---|---|---|---|---|---|---|
| Stiffenera | 75,81 | 435,56 | 352,80 | 18 | 16 | OK |
| Stiffenera 1 | 103,35 | 435,56 | 352,80 | 24 | 21 | OK |
| Stiffenerb | 74,17 | 435,56 | 352,80 | 18 | 12 | OK |
| Stiffenerb 1 | 50,21 | 435,56 | 352,80 | 12 | 9 | OK |
| Stiffenerc | 240,61 | 435,56 | 352,80 | 56 | 37 | OK |
| Stiffenerc 1 | 223,96 | 435,56 | 352,80 | 52 | 31 | OK |
| Stiffenerd | 302,61 | 435,56 | 352,80 | 70 | 42 | OK |
| Stiffenerd 1 | 319,09 | 435,56 | 352,80 | 74 | 48 | OK |
| Stiffenere (Anchor plate) | 427,20 | 435,56 | 352,80 | 99 | 60 | OK |
| Stiffenere (Anchor plate) 1 | 427,20 | 435,56 | 352,80 | 99 | 60 | OK |
| Stiffenerf (Anchor plate) | 221,94 | 435,56 | 352,80 | 51 | 26 | OK |
| Stiffenerf (Anchor plate) 1 | 220,38 | 435,56 | 352,80 | 51 | 26 | OK |
| Stiffenere (Member 1-tfl 1) | 233,45 | 435,56 | 352,80 | 54 | 27 | OK |
| Stiffenere (Member 1-tfl 1) 1 | 234,66 | 435,56 | 352,80 | 54 | 27 | OK |
| Stiffenerf (Member 1-bfl 1) | 160,81 | 435,56 | 352,80 | 37 | 13 | OK |

Vhodne podatke in rezultate je potrebno preveriti glede skladnosti z obstoječimi pogoji in verodostojnosti!
PROFIS Engineering ( c ) 2003-2025 Hilti AG, FL-9494 Schaan Hilti je registrirana blagovna znamka Hilti AG, Schaan

| | | | |
|---|---|---|---|
| Podjetje: | RAZPON d.o.o. | Stran: | 17 |
| Naslov: | Tehnološki park 20, 1000 Ljubljana | Projektant: | Igor Gorup |
| Telefon I Faks: | +38616203366 \| | E-mail: | igor.gorup@razpon.si |
| Projektiranje: | Beton - 11. Juni 2025 (1) | Datum: | 13.06.2025 |
| Točka pritrjevanja: | Sidranje S2 | | |

| Rob | $\sigma_{w,Ed}$ [N/mm²] | $\sigma_{w,Rd}$ [N/mm²] | $\sigma_{\perp,Rd}$ [N/mm²] | Izkoriščenost [%] | Izkoriščenost$_c$ [%] | Status |
|---|---|---|---|---|---|---|
| Stiffenerf (Member 1-bfl 1) 1 | 160,75 | 435,56 | 352,80 | 37 | 13 | OK |

### 2.6 Beton

Merodajna obtežna kombinacija: 1 - Kombination 1

V skladu s standardom EN1992-1-1 točka 6.7(4), mora biti beton dovolj armiran za prevzem nateznih sil, ki jih povzroči pritrjeni element. Programska oprema PROFIS Engineering ne zajema določitve potrebne armature v betonu.

#### 2.6.1 Pritisk na beton pod ležiščno pločevino

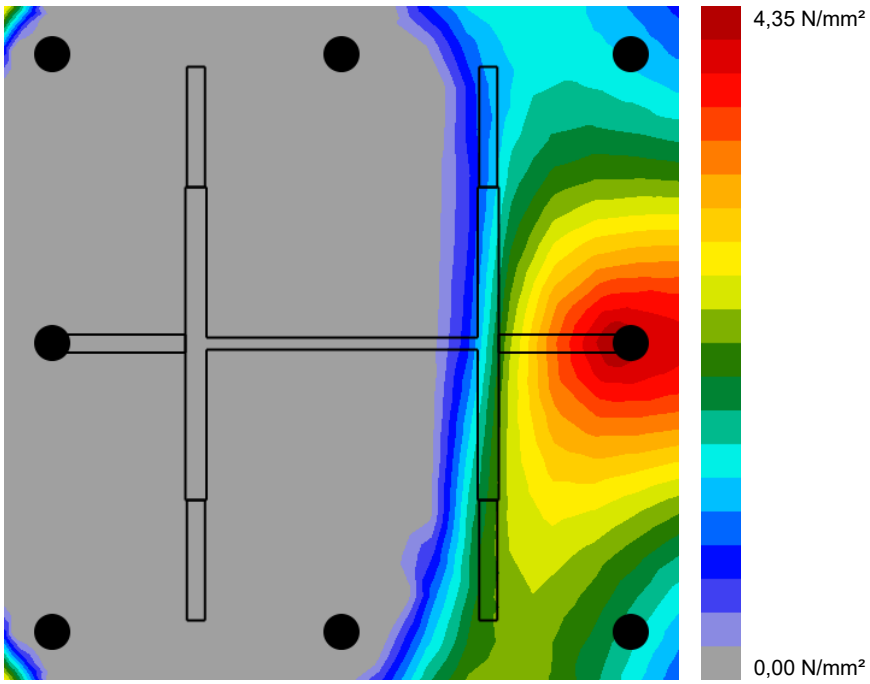


#### 2.6.2 Kontrola tlačnih napetosti v betonu pod ležiščno pločevino okoli profila po EN1992-1 točka 6.7 in EN1993-1-8, točka 6.2.5

**Enačbe**

$$f_{jd} = \frac{\beta_j \, k_j \, \alpha_{cc} \, f_{ck}}{\gamma_c}$$

$$\sigma = \frac{N}{A_{eff}}$$

$$\text{Izkoriščenost} = \frac{\sigma}{f_{jd}}$$

**Spremenljivke**

| N [kN] | $A_{eff}$ [mm²] | $\beta_j$ | $k_j$ | $\alpha_{cc}$ | $f_{ck}$ [N/mm²] | $\gamma_c$ |
|---|---|---|---|---|---|---|
| 233,413 | 85.306 | 0,67 | 3,00 | 0,85 | 25,00 | 1,50 |

**Rezultati**

| $\sigma$ [N/mm²] | $f_{jd}$ [N/mm²] | Izkoriščenost [%] | Status |
|---|---|---|---|
| 2,74 | 28,48 | 10 | OK |

Vhodne podatke in rezultate je potrebno preveriti glede skladnosti z obstoječimi pogoji in verodostojnosti!
PROFIS Engineering ( c ) 2003-2025 Hilti AG, FL-9494 Schaan Hilti je registrirana blagovna znamka Hilti AG, Schaan

| | | | |
|---|---|---|---|
| Podjetje: | RAZPON d.o.o. | Stran: | 18 |
| Naslov: | Tehnološki park 20, 1000 Ljubljana | Projektant: | Igor Gorup |
| Telefon I Faks: | +38616203366 \| | E-mail: | igor.gorup@razpon.si |
| Projektiranje: | Beton - 11. Juni 2025 (1) | Datum: | 13.06.2025 |
| Točka pritrjevanja: | Sidranje S2 | | |

### 2.7 Pomen simbolov

| | |
|---|---|
| a | Debelina zvara |
| $a_b$ | Faktor |
| $\alpha_{cc}$ | Dolgotrajne posledice na maksimalno trdnost betona |
| $A_{eff}$ | Efektivna površina |
| $a_{min}$ | Minimalna debelina zvara |
| $\beta_j$ | Koeficient spoja $\beta_j$ |
| $\beta_w$ | Korelacijski faktor EN 1993-1-8 tab. 4.1 |
| d | Nominalni premer vijaka |
| $\varepsilon_{lim}$ | Mejna plastična deformacija |
| $\varepsilon_{Pl}$ | Plastična deformacija po CBFEM |
| $F_{b,Rd}$ | Odpornost ležiščne pločevine EN 1993-1-8 tab. 3.4 |
| $f_{ck}$ | Karakteristična tlačna trdnost betona |
| $f_{jd}$ | Mejna odpornost betonske kocke |
| $f_u$ | Mejna odpornost |
| $f_y$ | Meja tečenja |
| $\gamma_c$ | Faktor uporabe - SP 16, Tabela 41 |
| $\gamma_{M0}$ | Varnostni faktor jekla gamma M0 |
| $\gamma_{M2}$ | Varnostni faktor jekla gamma M2 |
| $k_1$ | Faktor oddaljenosti od roba in razmak med vijaki pravokotno na smer prenosa obremenitve - EN 1993-1-8 - Tabela 3.4 |
| $k_j$ | Faktor koncentracije |
| L | Dolžina zvara |
| N | Rezultanta tlačne sile |
| $\sigma$ | Povprečna napetost v betonu |
| $\sigma_\perp$ | Pravokotne napetosti |
| $\sigma_{\perp,Rd}$ | Odpornost na pravokotne napetosti |
| $\sigma_{Ed}$ | Nadomestna napetost |
| $\sigma_{w,Ed}$ | Nadomestna napetost |
| $\sigma_{w,Rd}$ | Odpornost nadomestne napetosti |
| t | Debelina ležiščne pločevine |
| $\tau_\perp$ | Strižna napetost pravokotno na os zvara |
| $\tau_{\parallel}$ | Strižna napetost pravokotno na os zvara |
| Izkoriščenost$_c$ | Izkoriščenost zvarov |
| $V_{Ed}$ | Strižna sila na sidro |

### 2.8 Opozorila

- Z uporabo funkcionalnosti podajne ležiščne pločevine programa PROFIS Engineering ste mogoče izven okvirov standarda in vaša specificirana ležiščna pločevina se ne bo obnašala togo. Prosimo vas, da preverite rezultate s kompetentnim odgovornim projektantom za zagotovitev primernosti in ustreznosti za vaše specifične pristojnosti in projektne zahteve.
- Sidro je modelirano z upoštevanjem togosti določene iz grafov obremenitev-deformacija, na podlagi testov v neodvisnih laboratorijih. Upoštevajte, da enostavna zamenjava sidra ni mogoča, saj togost sidra močno vpliva na rezultate porazdelitve obtežbe.

Vhodne podatke in rezultate je potrebno preveriti glede skladnosti z obstoječimi pogoji in verodostojnosti!
PROFIS Engineering ( c ) 2003-2025 Hilti AG, FL-9494 Schaan Hilti je registrirana blagovna znamka Hilti AG, Schaan

| | | | |
|---|---|---|---|
| Podjetje: | RAZPON d.o.o. | Stran: | 19 |
| Naslov: | Tehnološki park 20, 1000 Ljubljana | Projektant: | Igor Gorup |
| Telefon I Faks: | +38616203366 \| | E-mail: | igor.gorup@razpon.si |
| Projektiranje: | Beton - 11. Juni 2025 (1) | Datum: | 13.06.2025 |
| Točka pritrjevanja: | Sidranje S2 | | |

## 3 Povzetek rezultatov

Izračun ležiščne pločevine, sider, zvarov in ostalih elementov je zasnovan po metodi CBFEM (metoda končnih elementov z upoštevanjem posameznih komponent) in regulativ iz Evrokoda.

| | Obtežna kombinacija | Maks. izkoriščenost | Status |
|---|---|---|---|
| Sidra | Kombination 1 | 100% | OK |
| Ležiščna pločevina | Kombination 1 | 38% | OK |
| Zvari | Kombination 1 | 99% | OK |
| Toge ojačitve | Kombination 1 | 63% | OK |
| Beton | Kombination 1 | 10% | OK |
| Profil | Kombination 1 | 44% | OK |

**Izbrano pritrjevanje ustreza projektnim pogojem!**

Vhodne podatke in rezultate je potrebno preveriti glede skladnosti z obstoječimi pogoji in verodostojnosti!
PROFIS Engineering ( c ) 2003-2025 Hilti AG, FL-9494 Schaan Hilti je registrirana blagovna znamka Hilti AG, Schaan

| | | | |
|---|---|---|---|
| Podjetje: | RAZPON d.o.o. | Stran: | 20 |
| Naslov: | Tehnološki park 20, 1000 Ljubljana | Projektant: | Igor Gorup |
| Telefon I Faks: | +38616203366 \| | E-mail: | igor.gorup@razpon.si |
| Projektiranje: | Beton - 11. Juni 2025 (1) | Datum: | 13.06.2025 |
| Točka pritrjevanja: | Sidranje S2 | | |

## 4 Opombe; Vaše dolžnosti sodelovanja

- Vse informacije in podatki, ki jih vsebuje programska oprema, se nanašajo izključno na uporabo izdelkov Hilti in temeljijo na načelih, formulah in varnostnih predpisih v skladu s tehničnimi navodili podjetja Hilti ter navodili za uporabo, montažo in montažo itd. ki jih mora uporabnik dosledno upoštevati. Vse vsebovane vrednosti so povprečne številke, zato je treba pred uporabo ustreznega izdelka Hilti opraviti preskuse, specifične za uporabo. Rezultati izračunov s programsko opremo v osnovi temeljijo na podatkih, ki jih vnesete. Zato prevzemate vso odgovornost za odsotnost napak, popolnost in ustreznost podatkov, ki jih morate vnesti. Poleg tega prevzemate vso odgovornost za to, da rezultate izračunov pregleda in popravi strokovnjak, zlasti glede skladnosti z veljavnimi normativi in dovoljenji, preden jih uporabite za svoj specifični objekt. Programska oprema služi le kot pomoč pri razlagi norm in dovoljenj brez kakršnega koli jamstva o odsotnosti napak, pravilnosti in ustreznosti rezultatov ali primernosti za določeno aplikacijo.
- Za preprečevanje ali omejitev škode, ki jo povzroča programska oprema, morate sprejeti vse potrebne in razumne ukrepe. Zlasti morate poskrbeti za redno varnostno kopiranje izračunov in podatkov ter po potrebi redno posodabljati programsko opremo, ki jo ponuja Hilti. Če ne uporabljate funkcije AutoUpdate programske opreme, morate z uporabo ročnih posodobitev prek spletnega mesta Hilti zagotoviti, da uporabljate trenutno in posodobljeno različico programske opreme. Hilti ne bo odgovoren za posledice, kot so obnovitev izgubljenih ali poškodovanih podatkov ali programov, ki so posledica krivdne kršitve dolžnosti.

Vhodne podatke in rezultate je potrebno preveriti glede skladnosti z obstoječimi pogoji in verodostojnosti!
PROFIS Engineering ( c ) 2003-2025 Hilti AG, FL-9494 Schaan Hilti je registrirana blagovna znamka Hilti AG, Schaan

| | | | |
|---|---|---|---|
| Podjetje: | RAZPON d.o.o. | Stran: | 1 |
| Naslov: | Tehnološki park 20, 1000 Ljubljana | Projektant: | Igor Gorup |
| Telefon I Faks: | +38616203366 \| | E-mail: | igor.gorup@razpon.si |
| Projektiranje: | Beton - 12. Juni 2025 | Datum: | 13.06.2025 |
| Točka pritrjevanja: | Sidranje S3 | | |

**Komentar projektanta:**

# 1 Izračun detajla sidranja

## 1.1 Vhodni podatki

| | |
|---|---|
| **Tip in velikost sidra:** | **HIT-RE 500 V4 + HAS Meter 8.8 M24** |
| Povratna doba (življenjska doba v letih): | 50 |
| Številka artikla: | 2390170 HAS 8.8 M24x1000 (element) / 2287557 HIT-RE 500 V4 (kemično sidro) |
| Specification text: | Hilti AM 8.8 Gewindestange with HIT-RE 500 V4 Injektionssystem with 480 mm embedment hef, M24, Stahl galvanisiert, Hammerbohren installation per ETA 20/0541, |
| Efektivna sidrna globina: | $h_{ef,act}$ = 480,0 mm ($h_{ef,limit}$ = - mm) |
| Material: | 8.8 |
| Tehnična ocena artikla: | ETA 20/0541 |
| Izdano I Veljavno: | 09.06.2023 \| - |
| Kontrola: | Projektna metoda EN 1992-4, Kemično sidro |
| Vgradnja z nadvišanjem: | $e_b$ = 0,0 mm (brez nadvišanja); t = 30,0 mm |
| Ležišča pločevina[CBFEM]: | $l_x$ x $l_y$ x t = 340,0 mm x 340,0 mm x 30,0 mm; |
| Profil: | IPBi/HEA, IPBI 200 / HE 200 A; (L x W x T x FT) = 190,0 mm x 200,0 mm x 6,5 mm x 10,0 mm |
| Osnovni material: | razpokan beton, C25/30, $f_{c,cyl}$ = 25,00 N/mm$^2$; h =1.000,0 mm, Temp. kratko./dolgo.: 40/24 °C, delni varnostni faktor materiala $\gamma_c$ = 1,500 |
| **Vgradnja:** | **Hammer drilled hole, Pogoji vgradnje: Suho** |
| Ojačitev: | brez armature ali razmak med armaturo >= 150 mm (any Ø) or >= 100 mm (Ø <= 10 mm) |
| | z vzdolžno armaturo po robu betona d >= 12,0 [mm] + gosta mreža (armatura, obešala) s <= 100,0 [mm] |
| | Prisotna je armatura za kontrolo cepitve betona v skladu s standardom EN 1992-4, 7.2.1.7 (2) b) 2) |

[CBFEM] - Izračun sider temelji na metodi končnih elementov z upoštevanjem posameznih komponent (CBFEM)

**Geometrija [mm] & Obtežba [kN, kNm]**

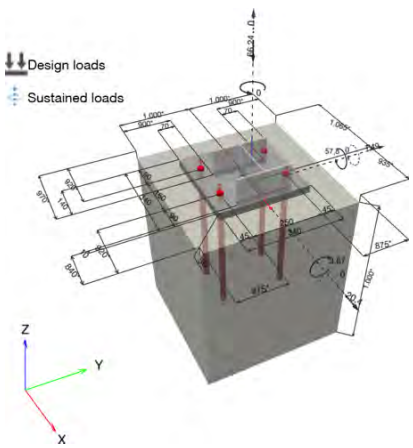


Vhodne podatke in rezultate je potrebno preveriti glede skladnosti z obstoječimi pogoji in verodostojnosti!
PROFIS Engineering ( c ) 2003-2025 Hilti AG, FL-9494 Schaan Hilti je registrirana blagovna znamka Hilti AG, Schaan

| | | | |
|---|---|---|---|
| Podjetje: | RAZPON d.o.o. | Stran: | 2 |
| Naslov: | Tehnološki park 20, 1000 Ljubljana | Projektant: | Igor Gorup |
| Telefon I Faks: | +38616203366 \| | E-mail: | igor.gorup@razpon.si |
| Projektiranje: | Beton - 12. Juni 2025 | Datum: | 13.06.2025 |
| Točka pritrjevanja: | Sidranje S3 | | |

### 1.1.1 Obtežna kombinacija

| Primer | Opis | Sile [kN] / Momenti [kNm] | Potresno | požar | Izkoriščenost [%] |
|---|---|---|---|---|---|
| 1 | Kombination 1 | N = −66,240; $V_x$ = 20,400; $V_y$ = 1,490; $M_x$ = −3,870; $M_y$ = 57,800; $M_z$ = 0,000; $N_{sus}$ = 0,000; $M_{x,sus}$ = 0,000; $M_{y,sus}$ = 0,000; | ne | ne | 75 |

### 1.2 Obtežni primer/Rezultante sil v sidru

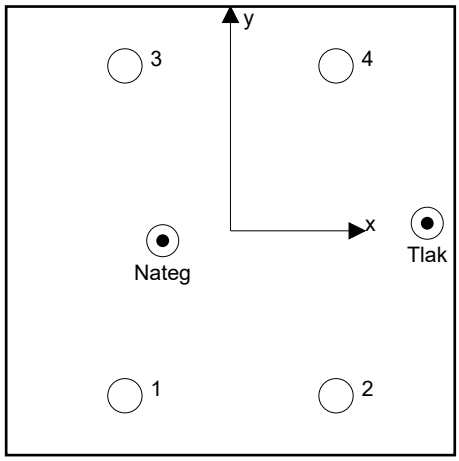


**Reakcije v sidru [kN]**
Natezna sila: (+Nateg, -Tlak)

| Sidro | Natezna sila | Strižna sila | Strižna sila x | Strižna sila y |
|---|---|---|---|---|
| 1 | 115,826 | 5,614 | 5,521 | 1,017 |
| 2 | 28,152 | 4,961 | 4,956 | 0,221 |
| 3 | 107,214 | 5,262 | 5,243 | −0,444 |
| 4 | 20,493 | 4,731 | 4,680 | 0,696 |

Resulting tension force in (x/y)=(−51,4/−7,5): 271,684 [kN]
Resulting compression force in (x/y)=(149,1/5,8): 339,814 [kN]

Sile v sidru so izračunane po metodi končnih elementov z upoštevanjem posameznih komponent (CBFEM)

Vhodne podatke in rezultate je potrebno preveriti glede skladnosti z obstoječimi pogoji in verodostojnosti!
PROFIS Engineering ( c ) 2003-2025 Hilti AG, FL-9494 Schaan Hilti je registrirana blagovna znamka Hilti AG, Schaan

| | | | |
|---|---|---|---|
| Podjetje: | RAZPON d.o.o. | Stran: | 3 |
| Naslov: | Tehnološki park 20, 1000 Ljubljana | Projektant: | Igor Gorup |
| Telefon I Faks: | +38616203366 \| | E-mail: | igor.gorup@razpon.si |
| Projektiranje: | Beton - 12. Juni 2025 | Datum: | 13.06.2025 |
| Točka pritrjevanja: | Sidranje S3 | | |


### 1.3 Natezna obremenitev (EN 1992-4, Točka 7.2.1)

| | Obtežba [kN] | Kapaciteta [kN] | Izkoriščenost $\beta_N$ [%] | Status |
|---|---|---|---|---|
| Nosilnost jekla* | 115,826 | 188,267 | 62 | OK |
| Kombinacija izvleka sidra in betonskega konusa** | 271,684 | 365,774 | 75 | OK |
| Porušitev po konusu betona** | 271,684 | 559,578 | 49 | OK |
| Cepitev betona** | N/A | N/A | N/A | N/A |

*najbolj obremenjeno sidro **skupina sider (natezno obremenjena sidra)

#### 1.3.1 Nosilnost jekla

$$N_{Ed} \leq N_{Rd,s} = \frac{N_{Rk,s}}{\gamma_{Ms}}$$ EN 1992-4, Tabela 7.1

| $N_{Rk,s}$ [kN] | $\gamma_{Ms}$ | $N_{Rd,s}$ [kN] | $N_{Ed}$ [kN] |
|---|---|---|---|
| 282,400 | 1,500 | 188,267 | 115,826 |

Vhodne podatke in rezultate je potrebno preveriti glede skladnosti z obstoječimi pogoji in verodostojnosti!
PROFIS Engineering ( c ) 2003-2025 Hilti AG, FL-9494 Schaan Hilti je registrirana blagovna znamka Hilti AG, Schaan

| | | | |
|---|---|---|---|
| Podjetje: | RAZPON d.o.o. | Stran: | 4 |
| Naslov: | Tehnološki park 20, 1000 Ljubljana | Projektant: | Igor Gorup |
| Telefon I Faks: | +38616203366 \| | E-mail: | igor.gorup@razpon.si |
| Projektiranje: | Beton - 12. Juni 2025 | Datum: | 13.06.2025 |
| Točka pritrjevanja: | Sidranje S3 | | |

### 1.3.2 Kombinacija izvleka sidra in betonskega konusa

$N_{Ed} \le N_{Rd,p} = \frac{N_{Rk,p}}{\gamma_{Mp}}$ EN 1992-4, Tabela 7.1

$N_{Rk,p} = N^0_{Rk,p} \cdot \frac{A_{p,N}}{A^0_{p,N}} \cdot \psi_{g,Np} \cdot \psi_{s,Np} \cdot \psi_{re,Np} \cdot \psi_{ec1,Np} \cdot \psi_{ec2,Np}$ EN 1992-4, Enačba (7.13)

$N^0_{Rk,p} = \psi_{sus} \cdot \tau_{Rk} \cdot \pi \cdot d \cdot h_{ef}$ EN 1992-4, Enačba (7.14)

$\psi_{sus} = 1$ EN 1992-4, Enačba (7.14a)

$s_{cr,Np} = 7{,}3 \cdot d \cdot \sqrt{\psi_{sus} \cdot \tau_{Rk}} \le 3 \cdot h_{ef}$ EN 1992-4, Enačba (7.15)

$\psi_{g,Np} = \psi^0_{g,Np} - \left(\frac{s}{s_{cr,Np}}\right)^{0,5} \cdot \left(\psi^0_{g,Np} - 1\right) \ge 1{,}00$ EN 1992-4, Enačba (7.17)

$\psi^0_{g,Np} = \sqrt{n} - (\sqrt{n} - 1) \cdot \left(\frac{\tau_{Rk}}{\tau_{Rk,c}}\right)^{1,5} \ge 1{,}00$ EN 1992-4, Enačba (7.18)

$\tau_{Rk,c} = \frac{k_3}{\pi \cdot d} \cdot \sqrt{h_{ef} \cdot f_{ck}}$ EN 1992-4, Enačba (7.19)

$\psi_{s,Np} = 0{,}7 + 0{,}3 \cdot \frac{c}{c_{cr,Np}} \le 1{,}00$ EN 1992-4, Enačba (7.20)

$\psi_{ec1,Np} = \frac{1}{1 + \left(\frac{2 \cdot e_{c1,N}}{s_{cr,Np}}\right)} \le 1{,}00$ EN 1992-4, Enačba (7.21)

$\psi_{ec2,Np} = \frac{1}{1 + \left(\frac{2 \cdot e_{c2,N}}{s_{cr,Np}}\right)} \le 1{,}00$ EN 1992-4, Enačba (7.21)

| $A_{p,N}$ [mm²] | $A^0_{p,N}$ [mm²] | $\tau_{Rk,ucr,20}$ [N/mm²] | $s_{cr,Np}$ [mm] | $c_{cr,Np}$ [mm] | $c_{min}$ [mm] | $f_{c,cyl}$ [N/mm²] |
|---|---|---|---|---|---|---|
| 778.630 | 460.426 | 15,00 | 678,5 | 339,3 | 875,0 | 25,00 |

| $\psi_c$ | $\tau_{Rk,cr}$ [N/mm²] | $k_3$ | $\tau_{Rk,c}$ [N/mm²] | $\psi^0_{g,Np}$ | $\psi_{g,Np}$ |
|---|---|---|---|---|---|
| 1,023 | 9,71 | 7,700 | 11,19 | 1,191 | 1,086 |

| $e_{c1,N}$ [mm] | $\psi_{ec1,Np}$ | $e_{c2,N}$ [mm] | $\psi_{ec2,Np}$ | $\psi_{s,Np}$ | $\psi_{re,Np}$ |
|---|---|---|---|---|---|
| 51,4 | 0,869 | 7,5 | 0,978 | 1,000 | 1,000 |

| $\psi^0_{sus}$ | $\alpha_{sus}$ | $\psi_{sus}$ |
|---|---|---|
| 0,880 | 0,000 | 1,000 |

| $N^0_{Rk,p}$ [kN] | $N_{Rk,p}$ [kN] | $\gamma_{Mp}$ | $N_{Rd,p}$ [kN] | $N_{Ed}$ [kN] |
|---|---|---|---|---|
| 351,574 | 548,661 | 1,500 | 365,774 | 271,684 |

| ID skupine sider |
|---|
| 1-4 |

Vhodne podatke in rezultate je potrebno preveriti glede skladnosti z obstoječimi pogoji in verodostojnosti!
PROFIS Engineering ( c ) 2003-2025 Hilti AG, FL-9494 Schaan Hilti je registrirana blagovna znamka Hilti AG, Schaan

| | | | |
|---|---|---|---|
| Podjetje: | RAZPON d.o.o. | Stran: | 5 |
| Naslov: | Tehnološki park 20, 1000 Ljubljana | Projektant: | Igor Gorup |
| Telefon I Faks: | +38616203366 \| | E-mail: | igor.gorup@razpon.si |
| Projektiranje: | Beton - 12. Juni 2025 | Datum: | 13.06.2025 |
| Točka pritrjevanja: | Sidranje S3 | | |

### 1.3.3 Porušitev po konusu betona

$$N_{Ed} \le N_{Rd,c} = \frac{N_{Rk,c}}{\gamma_{Mc}}$$ EN 1992-4, Tabela 7.1

$$N_{Rk,c} = N^0_{Rk,c} \cdot \frac{A_{c,N}}{A^0_{c,N}} \cdot \psi_{s,N} \cdot \psi_{re,N} \cdot \psi_{ec1,N} \cdot \psi_{ec2,N} \cdot \psi_{M,N}$$ EN 1992-4, Enačba (7.1)

$$N^0_{Rk,c} = k_1 \cdot \sqrt{f_{ck}} \cdot h_{ef}^{1,5}$$ EN 1992-4, Enačba (7.2)

$$A^0_{c,N} = s_{cr,N} \cdot s_{cr,N}$$ EN 1992-4, Enačba (7.3)

$$\psi_{s,N} = 0,7 + 0,3 \cdot \frac{c}{c_{cr,N}} \le 1,00$$ EN 1992-4, Enačba (7.4)

$$\psi_{ec1,N} = \frac{1}{1 + \left(\frac{2 \cdot e_{N,1}}{s_{cr,N}}\right)} \le 1,00$$ EN 1992-4, Enačba (7.6)

$$\psi_{ec2,N} = \frac{1}{1 + \left(\frac{2 \cdot e_{N,2}}{s_{cr,N}}\right)} \le 1,00$$ EN 1992-4, Enačba (7.6)

$$\psi_{M,N} = 2,0 - \frac{z}{1,5 \cdot h_{ef}} \ge 1,00$$ EN 1992-4, Enačba (7.7)

| $A_{c,N}$ [mm²] | $A^0_{c,N}$ [mm²] | $c_{cr,N}$ [mm] | $s_{cr,N}$ [mm] | $f_{c,cyl}$ [N/mm²] | | |
|---|---|---|---|---|---|---|
| 2.704.000 | 2.073.600 | 720,0 | 1.440,0 | 25,00 | | |
| $e_{c1,N}$ [mm] | $\psi_{ec1,N}$ | $e_{c2,N}$ [mm] | $\psi_{ec2,N}$ | $\psi_{s,N}$ | $\psi_{re,N}$ | z [mm] |
| 51,4 | 0,933 | 7,5 | 0,990 | 1,000 | 1,000 | 200,9 |
| $\psi_{M,N}$ | $k_1$ | $N^0_{Rk,c}$ [kN] | $\gamma_{Mc}$ | $N_{Rd,c}$ [kN] | $N_{Ed}$ [kN] | |
| 1,721 | 7,700 | 404,877 | 1,500 | 559,578 | 271,684 | |

| ID skupine sider |
|---|
| 1-4 |

Vhodne podatke in rezultate je potrebno preveriti glede skladnosti z obstoječimi pogoji in verodostojnosti!
PROFIS Engineering ( c ) 2003-2025 Hilti AG, FL-9494 Schaan Hilti je registrirana blagovna znamka Hilti AG, Schaan

| | | | |
|---|---|---|---|
| Podjetje: | RAZPON d.o.o. | Stran: | 6 |
| Naslov: | Tehnološki park 20, 1000 Ljubljana | Projektant: | Igor Gorup |
| Telefon I Faks: | +38616203366 \| | E-mail: | igor.gorup@razpon.si |
| Projektiranje: | Beton - 12. Juni 2025 | Datum: | 13.06.2025 |
| Točka pritrjevanja: | Sidranje S3 | | |

### 1.4 Strižna obremenitev (EN 1992-4, Točka 7.2.2)

| | Obtežba [kN] | Kapaciteta [kN] | Izkoriščenost $\beta_V$ [%] | Status |
|---|---|---|---|---|
| Nosilnost jekla (brez nadvišanja)* | 5,614 | 112,960 | 5 | OK |
| Porušitev po jeklu (z nadvišanjem)* | N/A | N/A | N/A | N/A |
| Nosilnost na iztrga betona** | 20,454 | 699,030 | 3 | OK |
| Porušitev po robu betona v smeri x+** | 20,421 | 216,169 | 10 | OK |

*najbolj obremenjeno sidro **skupina sider (relevantna sidra)

#### 1.4.1 Nosilnost jekla (brez nadvišanja)

$V_{Ed} \leq V_{Rd,s} = \frac{V_{Rk,s}}{\gamma_{Ms}}$ EN 1992-4, Tabela 7.2

$V_{Rk,s} = k_7 \cdot V^0_{Rk,s}$ EN 1992-4, Enačba (7.35)

| $V^0_{Rk,s}$ [kN] | $k_7$ | $V_{Rk,s}$ [kN] | $\gamma_{Ms}$ | $V_{Rd,s}$ [kN] | $V_{Ed}$ [kN] |
|---|---|---|---|---|---|
| 141,200 | 1,000 | 141,200 | 1,250 | 112,960 | 5,614 |

#### 1.4.2 Nosilnost na iztrga betona (merodajna nosilnost betona)

$V_{Ed} \leq V_{Rd,cp} = \frac{V_{Rk,cp}}{\gamma_{Mc,p}}$ EN 1992-4, Tabela 7.2

$V_{Rk,cp} = k_8 \cdot \min\{N_{Rk,c}; N_{Rk,p}\}$ EN 1992-4, Enačba (7.39c)

$N_{Rk,c} = N^0_{Rk,c} \cdot \frac{A_{c,N}}{A^0_{c,N}} \cdot \psi_{s,N} \cdot \psi_{re,N} \cdot \psi_{ec1,N} \cdot \psi_{ec2,N} \cdot \psi_{M,N}$ EN 1992-4, Enačba (7.1)

$N^0_{Rk,c} = k_1 \cdot \sqrt{f_{ck}} \cdot h_{ef}^{1,5}$ EN 1992-4, Enačba (7.2)

$A^0_{c,N} = s_{cr,N} \cdot s_{cr,N}$ EN 1992-4, Enačba (7.3)

$\psi_{s,N} = 0,7 + 0,3 \cdot \frac{c}{c_{cr,N}} \leq 1,00$ EN 1992-4, Enačba (7.4)

$\psi_{ec1,N} = \frac{1}{1 + \left(\frac{2 \cdot e_{V,1}}{s_{cr,N}}\right)} \leq 1,00$ EN 1992-4, Enačba (7.6)

$\psi_{ec2,N} = \frac{1}{1 + \left(\frac{2 \cdot e_{V,2}}{s_{cr,N}}\right)} \leq 1,00$ EN 1992-4, Enačba (7.6)

$\psi_{M,N} = 1$ EN 1992-4, Enačba (7.7)

| $A_{c,N}$ [mm²] | $A^0_{c,N}$ [mm²] | $c_{cr,N}$ [mm] | $s_{cr,N}$ [mm] | $k_8$ | $f_{c,cyl}$ [N/mm²] |
|---|---|---|---|---|---|
| 2.704.000 | 2.073.600 | 720,0 | 1.440,0 | 2,000 | 25,00 |

| $e_{c1,V}$ [mm] | $\psi_{ec1,N}$ | $e_{c2,V}$ [mm] | $\psi_{ec2,N}$ | $\psi_{s,N}$ | $\psi_{re,N}$ | $\psi_{M,N}$ |
|---|---|---|---|---|---|---|
| 0,3 | 1,000 | 4,7 | 0,993 | 1,000 | 1,000 | 1,000 |

| $k_1$ | $N^0_{Rk,c}$ [kN] | $\gamma_{Mc,p}$ | $V_{Rd,cp}$ [kN] | $V_{Ed}$ [kN] |
|---|---|---|---|---|
| 7,700 | 404,877 | 1,500 | 699,030 | 20,454 |

| ID skupine sider |
|---|
| 1-4 |

Vhodne podatke in rezultate je potrebno preveriti glede skladnosti z obstoječimi pogoji in verodostojnosti!
PROFIS Engineering ( c ) 2003-2025 Hilti AG, FL-9494 Schaan Hilti je registrirana blagovna znamka Hilti AG, Schaan

| | | | |
|---|---|---|---|
| Podjetje: | RAZPON d.o.o. | Stran: | 7 |
| Naslov: | Tehnološki park 20, 1000 Ljubljana | Projektant: | Igor Gorup |
| Telefon I Faks: | +38616203366 \| | E-mail: | igor.gorup@razpon.si |
| Projektiranje: | Beton - 12. Juni 2025 | Datum: | 13.06.2025 |
| Točka pritrjevanja: | Sidranje S3 | | |

### 1.4.3 Porušitev po robu betona v smeri x+

$$V_{Ed} \le V_{Rd,c} = \frac{V_{Rk,c}}{\gamma_{Mc}}$$ EN 1992-4, Tabela 7.2

$$V_{Rk,c} = k_T \cdot V^0_{Rk,c} \cdot \frac{A_{c,V}}{A^0_{c,V}} \cdot \psi_{s,V} \cdot \psi_{h,V} \cdot \psi_{\alpha,V} \cdot \psi_{ec,V} \cdot \psi_{re,V}$$ EN 1992-4, Enačba (7.40)

$$V^0_{Rk,c} = k_9 \cdot d_{nom}^{\alpha} \cdot l_f^{\beta} \cdot \sqrt{f_{ck}} \cdot c_1^{1,5}$$ EN 1992-4, Enačba (7.41)

$$\alpha = 0,1 \cdot \left(\frac{l_f}{c_1}\right)^{0,5}$$ EN 1992-4, Enačba (7.42)

$$\beta = 0,1 \cdot \left(\frac{d_{nom}}{c_1}\right)^{0,2}$$ EN 1992-4, Enačba (7.43)

$$A^0_{c,V} = 4,5 \cdot c_1^2$$ EN 1992-4, Enačba (7.44)

$$\psi_{s,V} = 0,7 + 0,3 \cdot \frac{c_2}{1,5 \cdot c_1} \le 1,00$$ EN 1992-4, Enačba (7.45)

$$\psi_{h,V} = \left(\frac{1,5 \cdot c_1}{h}\right)^{0,5} \ge 1,00$$ EN 1992-4, Enačba (7.46)

$$\psi_{ec,V} = \frac{1}{1 + \left(\frac{2 \cdot e_V}{3 \cdot c_1}\right)} \le 1,00$$ EN 1992-4, Enačba (7.47)

$$\psi_{\alpha,V} = \sqrt{\frac{1}{(\cos \alpha_V)^2 + (0,5 \cdot \sin \alpha_V)^2}} \ge 1,00$$ EN 1992-4, Enačba (7.48)

$$c_1' = \max\left(\frac{c_{2,max}}{1,5}; \frac{h}{1,5}; \frac{s_{2,max}}{3}\right)$$ EN 1992-4, Enačba (7.50))

| $l_f$ [mm] | $d_{nom}$ [mm] | $k_9$ | $\alpha$ | $\beta$ | $f_{c,cyl}$ [N/mm²] | $c_1$ [mm] |
|---|---|---|---|---|---|---|
| 288,0 | 24,00 | 1,700 | 0,066 | 0,051 | 25,00 | 920,0 |

| $c_1'$ [mm] | $A_{c,V}$ [mm²] | $A^0_{c,V}$ [mm²] | $\psi_{s,V}$ | $\psi_{h,V}$ | $e_{c,V}$ [mm] | $\psi_{ec,V}$ |
|---|---|---|---|---|---|---|
| 666,7 | 2.000.000 | 2.000.000 | 0,962 | 1,000 | 3,4 | 0,997 |

| $\alpha_V$ [°] | $\psi_{\alpha,V}$ | $\psi_{re,V}$ |
|---|---|---|
| 2,58 | 1,001 | 1,400 |

| $V^0_{Rk,c}$ [kN] | $k_T$ | $\gamma_{Mc}$ | $V_{Rd,c}$ [kN] | $V_{Ed}$ [kN] |
|---|---|---|---|---|
| 241,267 | 1,0 | 1,500 | 216,169 | 20,421 |

| ID skupine sider |
|---|
| 2, 4 |

Vhodne podatke in rezultate je potrebno preveriti glede skladnosti z obstoječimi pogoji in verodostojnosti!
PROFIS Engineering ( c ) 2003-2025 Hilti AG, FL-9494 Schaan Hilti je registrirana blagovna znamka Hilti AG, Schaan

| | | | |
|---|---|---|---|
| Podjetje: | RAZPON d.o.o. | Stran: | 8 |
| Naslov: | Tehnološki park 20, 1000 Ljubljana | Projektant: | Igor Gorup |
| Telefon I Faks: | +38616203366 \| | E-mail: | igor.gorup@razpon.si |
| Projektiranje: | Beton - 12. Juni 2025 | Datum: | 13.06.2025 |
| Točka pritrjevanja: | Sidranje S3 | | |

### 1.5 Kombinacija nateznih in strižnih obremenitev (EN 1992-4-4, del 7.2.3)

Porušitev jekla

| $\beta_N$ | $\beta_V$ | $\alpha$ | Izkoriščenost $\beta_{N,V}$ [%] | Status |
|---|---|---|---|---|
| 0,615 | 0,050 | 2,000 | 39 | OK |

$\beta_N^{\alpha} + \beta_V^{\alpha} \leq 1{,}0$

Porušitev betona

| $\beta_N$ | $\beta_V$ | $\alpha$ | Izkoriščenost $\beta_{N,V}$ [%] | Status |
|---|---|---|---|---|
| 0,743 | 0,094 | 1,500 | 67 | OK |

$\beta_N^{\alpha} + \beta_V^{\alpha} \leq 1{,}0$

### 1.6 Opozorila

- Projektne metode v programski opremi PROFIS Engineering zahtevajo uporabo absolutno toge ležiščne pločevine v skladu z regulativami (ETAG 001/Annex C, EOTA TR029, itd.). To pomeni, da se porazdelitev obremenitve na sidra zaradi elastičnih deformacij sidrne plošče ne upošteva - predpostavlja se, da je ležiščna pločevina toga, da se ne deformira, v primeru delovanja projektne obtežbe. PROFIS Engineering izračuna najmanjšo potrebno debelino ležiščne pločevine s CBFEM metodo za omejitev napetosti v ležiščni pločevini na podlagi zgornjih predpostavk. PROFIS Engineering ne dokazuje, da je predpostavka o togi ležiščni pločevini pravilna. Vhodne podatke in rezultate je potrebno preveriti, da so v skladu z obstoječimi pogoji in verodostojnosti!
- The equations presented in this report are based on metric units. When inputs are displayed in imperial units, the user should be aware that the equations remain in their metric format.
- Potrebno je opraviti kontrolo prenosa obtežbe v osnovni material po EN 1992-4, Dodatek A!
- Izračun je veljaven samo v primeru, če luknja v ležiščni pločevini ni večja od vrednosti podane v Tabeli 6.1 of EN 1992-4!! Za večje premere izvrtin glej točko 6.2.2 of EN 1992-4!
- Seznam dodatne opreme v tem poročilu je samo za informacije uporabnika. V vsakem primeru je potrebno upoštevati navodila za uporabo, ki so priložena izdelku, da zagotovite pravilno vgradnjo.
- For the determination of the $\psi_{re,v}$ (concrete edge failure) the minimum concrete cover defined in the design settings is used as the concrete cover of the edge reinforcement.
- Karakteristična sprijena trdnost je odvisna od kratkotrajnih in dolgotrajnih temperaturnih obremenitev.
- Armiranje roba betona ni potrebno, da se izognemo cepitvi betona
- Load transfer from supplementary reinforcement to the structural member shall be verified by the responsible structural engineer.
- With supplementary reinforcement and post-installed anchors, please ensure that in the jobsite the rebars are not drilled through.
- Metode projektiranja v programu PROFIS Engineering zahtevajo upoštevanje toge ležiščne pločevine, skladno z veljavnimi predpisi (ETAG 001/Dodatek C, EOTA TR029, itd.). To pomeni, da je ležiščna pločevina absolutno toga in prepreči prerazporeditev obtežbe na sidra zaradi elastičnih/plastičnih pomikov. Uporabnik sprejme, da se ležiščna pločevina po inženirski presoji upošteva kot skoraj toga.
- Karakteristična sprijemna trdnost je odvisna od povratne dobe (servisna doba v letih): 50


PROFIS Engineering ( c ) 2003-2025 Hilti AG, FL-9494 Schaan Hilti je registrirana blagovna znamka Hilti AG, Schaan

| | | | |
|---|---|---|---|
| Podjetje: | RAZPON d.o.o. | Stran: | 9 |
| Naslov: | Tehnološki park 20, 1000 Ljubljana | Projektant: | Igor Gorup |
| Telefon I Faks: | +38616203366 \| | E-mail: | igor.gorup@razpon.si |
| Projektiranje: | Beton - 12. Juni 2025 | Datum: | 13.06.2025 |
| Točka pritrjevanja: | Sidranje S3 | | |

### 1.7 Podatki za vgradnjo

Ležišćna pločevina, jeklo: S 355; E = 210.000,00 N/mm$^2$; $f_{yk}$ = 355,00 N/mm$^2$
Profil: IPBi/HEA, IPBI 200 / HE 200 A; (L x W x T x FT) = 190,0 mm x 200,0 mm x 6,5 mm x 10,0 mm

Premer luknje v ležišćni plošči: $d_f$ = 26,0 mm

Debelina ležišćne pločevine (vnos): 30,0 mm

Metoda vrtanja: Udarno vrtanje
Čiščenje: Potrebno je čiščenje izvrtine z uporabo stisnjenega zraka v skladu z navodili za uporabo.

Tip in velikost sidra: HIT-RE 500 V4 + HAS Meter 8.8 M24
Številka artikla: 2390170 HAS 8.8 M24x1000 (element) / 2287557 HIT-RE 500 V4 (kemično sidro)

Maximum installation torque: 200 Nm

Globina izvrtine v osnovnem materialu: 28,0 mm

Globina izvrtine v osnovnem materialu: 480,0 mm

Minimalna debelina osnovnega materiala: 536,0 mm

Hilti AM 8.8 threaded rod with HIT-RE 500 V4 injection mortar with 480 mm embedment hef, M24, Steel galvanized, Hammer drill bit installation per ETA 20/0541

#### 1.7.1 Priporočeni dodatki

| Vrtanje | Čiščenje | Vgradnja |
|---|---|---|
| • Primerno vrtalno udarno kladivo<br>• Ustrezen sveder | • Zahtevano izpihovanje s komprimiranim zrakom in ustreznimi pripomočki, za izpihovanje prahu iz dna izvrtine.<br>• Okrogla jeklena ščetka ustreznega premera | • Dozirnik s kaseto in mešalcem<br>• Momentni ključ |

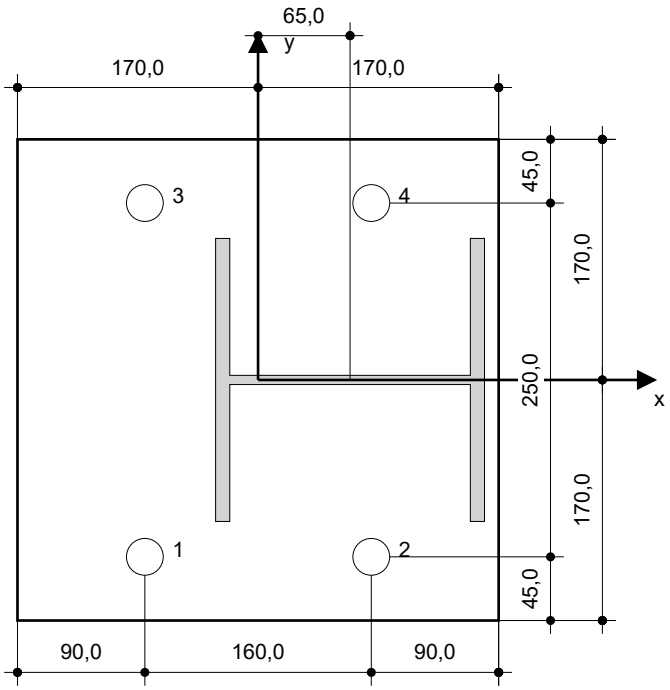


**Koordinate sidra [mm]**

| Sidro | x | y | $c_{-x}$ | $c_{+x}$ | $c_{-y}$ | $c_{+y}$ |
|---|---|---|---|---|---|---|
| 1 | −80,0 | −125,0 | 920,0 | 1.080,0 | 875,0 | 1.125,0 |
| 2 | 80,0 | −125,0 | 1.080,0 | 920,0 | 875,0 | 1.125,0 |
| 3 | −80,0 | 125,0 | 920,0 | 1.080,0 | 1.125,0 | 875,0 |
| 4 | 80,0 | 125,0 | 1.080,0 | 920,0 | 1.125,0 | 875,0 |

Vhodne podatke in rezultate je potrebno preveriti glede skladnosti z obstoječimi pogoji in verodostojnosti!
PROFIS Engineering ( c ) 2003-2025 Hilti AG, FL-9494 Schaan Hilti je registrirana blagovna znamka Hilti AG, Schaan

| | | | |
|---|---|---|---|
| Podjetje: | RAZPON d.o.o. | Stran: | 10 |
| Naslov: | Tehnološki park 20, 1000 Ljubljana | Projektant: | Igor Gorup |
| Telefon I Faks: | +38616203366 \| | E-mail: | igor.gorup@razpon.si |
| Projektiranje: | Beton - 12. Juni 2025 | Datum: | 13.06.2025 |
| Točka pritrjevanja: | Sidranje S3 | | |

# 2 Izračun ležiščne pločevine

### 2.1 Vhodni podatki

| | |
|---|---|
| Ležiščna pločevina: | Oblika: Pravokotna<br>$l_x$ x $l_y$ x t = 340,0 mm x 340,0 mm x 30,0 mm<br>Izračun: FEM<br>Material: S 355; $F_y$ = 355,00 N/mm²; $\varepsilon_{lim}$ = 5,00% |
| Tip in velikost sidra: | HIT-RE 500 V4 + HAS Meter 8.8 M24, $h_{ef}$ = 480,0 mm |
| Togost sidra: | Sidro je modelirano z upoštevanjem togosti določene iz grafov obremenitev-deformacija, na podlagi testov v neodvisnih laboratorijih. Upoštevajte, da enostavna zamenjava sidra ni mogoča, saj togost sidra močno vpliva na rezultate porazdelitve obtežbe. |
| Projektna metoda: | EN-based design uporaba MKE z upoštevanjem posameznih komponent |
| Vgradnja z nadvišanjem: | $e_b$ = 0,0 mm (No stand-off); t = 30,0 mm |
| Profil: | IPBI 200 / HE 200 A; (L x W x T x FT) = 190,0 mm x 200,0 mm x 6,5 mm x 10,0 mm<br>Material: S 355; $F_y$ = 355,00 N/mm²; $\varepsilon_{lim}$ = 5,00%<br>Ekscentričnost x: 65,0 mm<br>Ekscentričnost y: 0,0 mm |
| Osnovni material: | Cracked concrete; C25/30; $f_{c,cyl}$ = 25,00 N/mm²; h = 1.000,0 mm; E = 31.000,00 N/mm²; G = 12.916,67 N/mm²; v = 0,20 |
| Zvari (profil na ležiščno pločevino): | Tip razporeditve: Plastičen<br>Material: S 355 |
| Velikost mreže: | Število elementov na robu: 8<br>Min. velikost elementa: 10,0 mm<br>Maks. velikost elementa: 50,0 mm |

### 2.2 Povzetek

| Opis | | Profil | | Ležiščna pločevina | | | Zvari [%] | Beton [%] |
|---|---|---|---|---|---|---|---|---|
| | | $\sigma_{Ed}$ [N/mm²] | $\varepsilon_{Pl}$ [%] | $\sigma_{Ed}$ [N/mm²] | $\varepsilon_{Pl}$ [%] | Nosilnost pločevine na bočni pritisk v območju luknje [%] | | |
| 1 | Kombination 1 | 345,01 | 0,05 | 221,98 | 0,00 | 1 | 99 | 52 |

### 2.3 Klasifikacija ležiščne pločevine

Spodnji rezultati so prikazani za merodajno obtežno kombinacijo: Kombination 1

| Natezne sile v sidru | Ekvivalentno toga ležiščna pločevina (FEM) | Projektiranje z upoštevanjem podajne ležiščne pločevine (FEM) |
|---|---|---|
| Sidro 1 | 130,638 kN | 115,826 kN |
| Sidro 2 | −0,005 kN | 28,152 kN |
| Sidro 3 | 120,327 kN | 107,214 kN |
| Sidro 4 | −0,008 kN | 20,493 kN |

Uporabnik je sprejel, da je obnašanje ležiščne pločevine 100 % togo, po svoji inženirski presoji.To pomeni, da so lahko uporabljene smernice za dimenzioniranje sider.

### 2.4 Profil/Toge ojačitve/Ležiščna pločevina

Profil in jeklene toge ojačitve so preverjene na ravni povezave jekla z betonom. Projektiranje detajla ne nadomesti projektiranja kritičnega jeklenega prereza, tovrstni izračun mora biti preverjen z drugim programom in ne PROFIS Engineering-om.

#### 2.4.1 Nadomestna napetost in plastična deformacija

Kriterij mejnega stanja po EN1993-1-5 Dodatek C.8, (1) 2.

**Rezultati**

Vhodne podatke in rezultate je potrebno preveriti glede skladnosti z obstoječimi pogoji in verodostojnosti!
PROFIS Engineering ( c ) 2003-2025 Hilti AG, FL-9494 Schaan Hilti je registrirana blagovna znamka Hilti AG, Schaan

| | | | |
|---|---|---|---|
| Podjetje: | RAZPON d.o.o. | Stran: | 11 |
| Naslov: | Tehnološki park 20, 1000 Ljubljana | Projektant: | Igor Gorup |
| Telefon I Faks: | +38616203366 \| | E-mail: | igor.gorup@razpon.si |
| Projektiranje: | Beton - 12. Juni 2025 | Datum: | 13.06.2025 |
| Točka pritrjevanja: | Sidranje S3 | | |

| Del | Obtežna kombinacija | Material | $\sigma_{Ed}$ [N/mm²] | $\varepsilon_{Pl}$ [%] | $f_y$ [N/mm²] | $\gamma_{M0}$ | $f_y/\gamma_{M0}$ [N/mm²] | $\varepsilon_{lim}$ [%] | Status |
|---|---|---|---|---|---|---|---|---|---|
| Ležiščna pločevina | Kombination 1 | S 355 | 221,98 | 0,00 | 355,00 | 1,00 | 355,00 | 5,00 | OK |
| Profil | Kombination 1 | S 355 | 270,40 | 0,01 | 355,00 | 1,00 | 355,00 | 5,00 | OK |
| Profil | Kombination 1 | S 355 | 345,01 | 0,05 | 355,00 | 1,00 | 355,00 | 5,00 | OK |
| Profil | Kombination 1 | S 355 | 240,22 | 0,00 | 355,00 | 1,00 | 355,00 | 5,00 | OK |

#### 2.4.1.1 Nadomestna napetost

Spodnji rezultati so prikazani za merodajno obtežno kombinacijo: 1 - Kombination 1

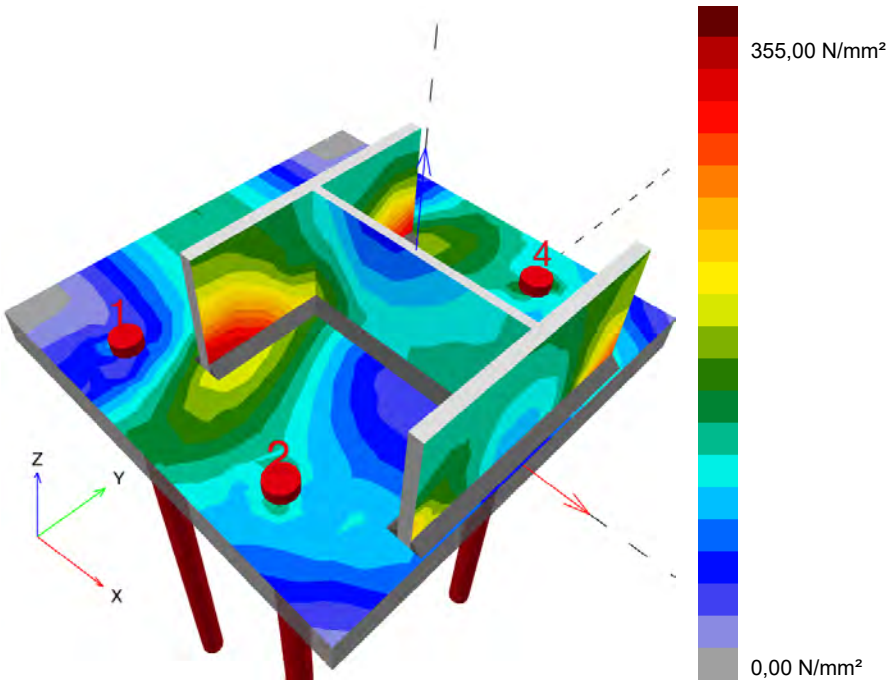



PROFIS Engineering ( c ) 2003-2025 Hilti AG, FL-9494 Schaan Hilti je registrirana blagovna znamka Hilti AG, Schaan

| | | | |
|---|---|---|---|
| Podjetje: | RAZPON d.o.o. | Stran: | 12 |
| Naslov: | Tehnološki park 20, 1000 Ljubljana | Projektant: | Igor Gorup |
| Telefon I Faks: | +38616203366 \| | E-mail: | igor.gorup@razpon.si |
| Projektiranje: | Beton - 12. Juni 2025 | Datum: | 13.06.2025 |
| Točka pritrjevanja: | Sidranje S3 | | |

### 2.4.1.2 Napetost na meji plastičnosti

Spodnji rezultati so prikazani za merodajno obtežno kombinacijo: 1 - Kombination 1

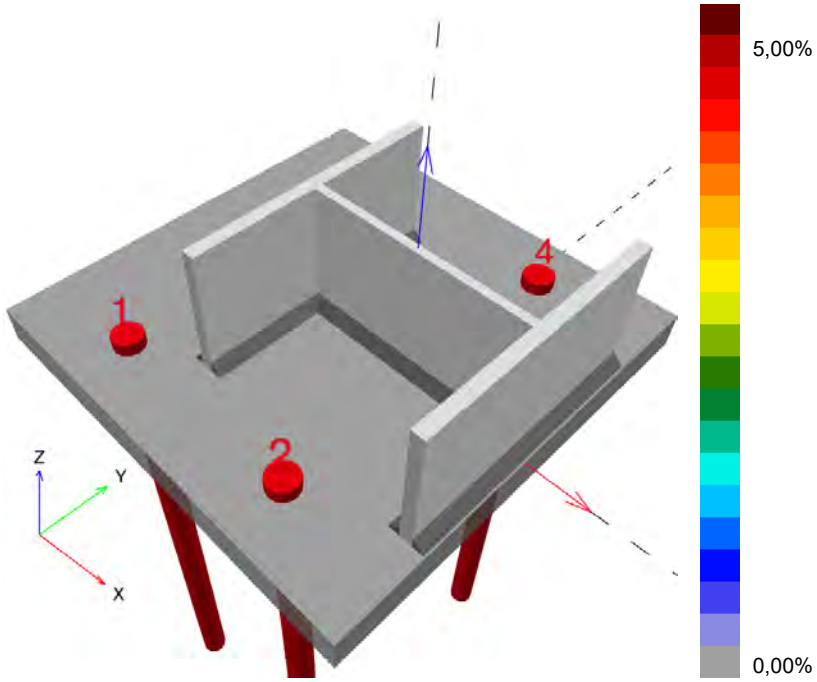


### 2.4.2 Nosilnost pločevine na bočni pritisk v območju luknje

Merodajna obtežna kombinacija: 1 - Kombination 1

Nosilnost pločevine na bočni pritisk, EN1993-1 - 8 točka 3.6.1:

**Enačbe**

$$F_{b,Rd} = \frac{k_1 \, a_b \, f_u \, d \, t}{\gamma_{M2}}$$

$$\text{Izkoriščenost} = \frac{V_{Ed}}{F_{b,Rd}}$$

**Spremenljivke**

| | $k_1$ | $a_b$ | $f_u$ [N/mm²] | d [mm] | t [mm] | $\gamma_{M2}$ |
|---|---|---|---|---|---|---|
| Sidro 1 | 2,50 | 1,00 | 490,00 | 24,0 | 30,0 | 1.25 |
| Sidro 2 | 2,50 | 1,00 | 490,00 | 24,0 | 30,0 | 1.25 |
| Sidro 3 | 2,50 | 1,00 | 490,00 | 24,0 | 30,0 | 1.25 |
| Sidro 4 | 2,50 | 1,00 | 490,00 | 24,0 | 30,0 | 1.25 |

**Rezultati**

| | $V_{Ed}$ [kN] | $F_{b,Rd}$ [kN] | Izkoriščenost [%] | Status |
|---|---|---|---|---|
| Sidro 1 | 5,614 | 705,600 | 1 | OK |
| Sidro 2 | 4,961 | 705,600 | 1 | OK |
| Sidro 3 | 5,262 | 705,600 | 1 | OK |
| Sidro 4 | 4,731 | 705,600 | 1 | OK |

Vhodne podatke in rezultate je potrebno preveriti glede skladnosti z obstoječimi pogoji in verodostojnosti!
PROFIS Engineering ( c ) 2003-2025 Hilti AG, FL-9494 Schaan Hilti je registrirana blagovna znamka Hilti AG, Schaan

| | | | |
|---|---|---|---|
| Podjetje: | RAZPON d.o.o. | Stran: | 13 |
| Naslov: | Tehnološki park 20, 1000 Ljubljana | Projektant: | Igor Gorup |
| Telefon I Faks: | +38616203366 \| | E-mail: | igor.gorup@razpon.si |
| Projektiranje: | Beton - 12. Juni 2025 | Datum: | 13.06.2025 |
| Točka pritrjevanja: | Sidranje S3 | | |

### 2.5 Zvari

Profili so modelirani brez upoštevanja kotnega radija. Posebna pravila varjenja (kot naprimer: hladno valjani profili...) niso upoštevana v programu.

#### 2.5.1 Ležiščna pločevina na profil

Merodajna obtežna kombinacija: 1 - Kombination 1

Izračun zvarov, EN1993-1-8 točka 4.5.3.2

Minimalna debelina zvara na stojini ($a_{min}$): 5,0 mm

Minimalna debelina zvara na pasnici ($a_{min}$): 5,0 mm

**Enačbe**

$$\sigma_{w,Ed} = (\sigma_{\perp}^2 + 3\,(\tau_{\perp}^2 + \tau_{||}^2))^{0.5}$$

$$\sigma_{w,Rd} = \frac{f_u}{\beta_w\,\gamma_{M2}}$$

$$\sigma_{\perp,Rd} = 0.9\frac{f_u}{\gamma_{M2}}$$

$$\text{Izkoriščenost} = \max\left(\frac{\sigma_{w,Ed}}{\sigma_{w,Rd}};\frac{|\sigma_{\perp}|}{\sigma_{\perp,Rd}}\right)$$

**Spremenljivke**

| Zvar | $\beta_w$ | $f_u$ [N/mm²] | $\gamma_{M2}$ |
|---|---|---|---|
| Stojina | 0,90 | 490,00 | 1,25 |
| Pasnica | 0,90 | 490,00 | 1,25 |

| Rob | a [mm] | L [mm] | $\varepsilon_{Pl}$ [%] | $\sigma_{\perp}$ [N/mm²] | $\tau_{\|\|}$ [N/mm²] | $\tau_{\perp}$ [N/mm²] |
|---|---|---|---|---|---|---|
| Member 1-bfl 1 | ◢6,0◣ | 200,0 | 0,05 | −161,78 | −136,41 | −182,82 |
| Member 1-bfl | ◢6,0◣ | 200,0 | 0,06 | −178,45 | 158,48 | 158,20 |
| Member 1-tfl 1 | ◢6,0◣ | 200,0 | 0,35 | 175,68 | −155,45 | 162,64 |
| Member 1-tfl | ◢6,0◣ | 200,0 | 0,19 | 152,49 | 154,74 | −170,67 |
| Member 1-w 1 | ◢6,0◣ | 180,0 | 0,00 | −46,74 | 15,61 | −45,74 |
| Member 1-w | ◢6,0◣ | 180,0 | 0,00 | −46,33 | −12,87 | 47,32 |

**Rezultati**

| Rob | $\sigma_{w,Ed}$ [N/mm²] | $\sigma_{w,Rd}$ [N/mm²] | $\sigma_{\perp,Rd}$ [N/mm²] | Izkoriščenost [%] | Izkoriščenost$_c$ [%] | Status |
|---|---|---|---|---|---|---|
| Member 1-bfl 1 | 426,93 | 435,56 | 352,80 | 99 | 46 | OK |
| Member 1-bfl | 426,94 | 435,56 | 352,80 | 99 | 43 | OK |
| Member 1-tfl 1 | 427,46 | 435,56 | 352,80 | 99 | 67 | OK |
| Member 1-tfl | 427,17 | 435,56 | 352,80 | 99 | 45 | OK |
| Member 1-w 1 | 95,87 | 435,56 | 352,80 | 23 | 19 | OK |
| Member 1-w | 96,75 | 435,56 | 352,80 | 23 | 19 | OK |

### 2.6 Beton

Merodajna obtežna kombinacija: 1 - Kombination 1

V skladu s standardom EN1992-1-1 točka 6.7(4), mora biti beton dovolj armiran za prevzem nateznih sil, ki jih povzroči pritrjeni element. Programska oprema PROFIS Engineering ne zajema določitve potrebne armature v betonu.

Vhodne podatke in rezultate je potrebno preveriti glede skladnosti z obstoječimi pogoji in verodostojnosti!
PROFIS Engineering ( c ) 2003-2025 Hilti AG, FL-9494 Schaan Hilti je registrirana blagovna znamka Hilti AG, Schaan

| | | | |
|---|---|---|---|
| Podjetje: | RAZPON d.o.o. | Stran: | 14 |
| Naslov: | Tehnološki park 20, 1000 Ljubljana | Projektant: | Igor Gorup |
| Telefon I Faks: | +38616203366 \| | E-mail: | igor.gorup@razpon.si |
| Projektiranje: | Beton - 12. Juni 2025 | Datum: | 13.06.2025 |
| Točka pritrjevanja: | Sidranje S3 | | |

### 2.6.1 Pritisk na beton pod ležiščno pločevino

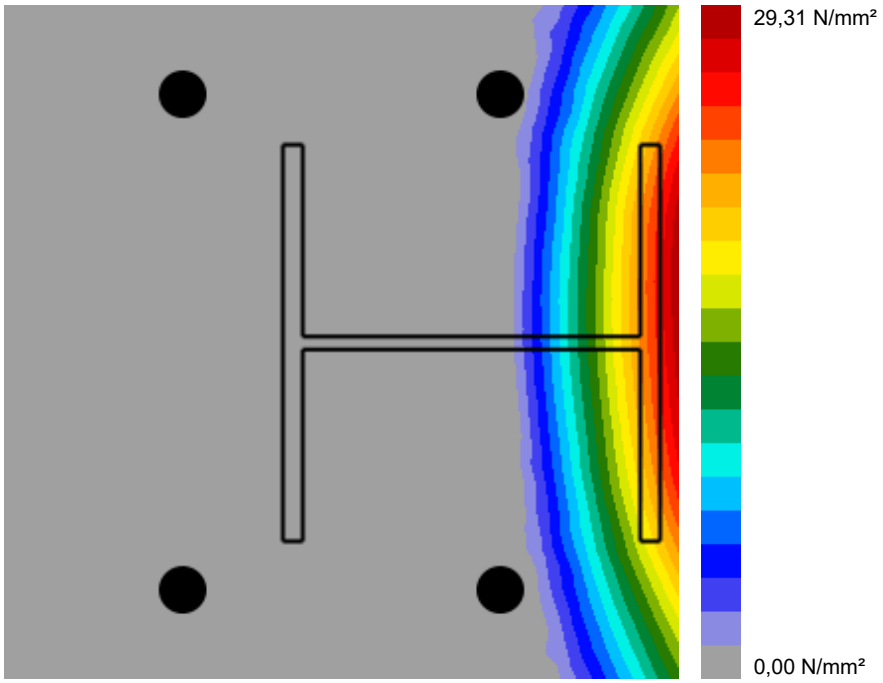


### 2.6.2 Kontrola tlačnih napetosti v betonu pod ležiščno pločevino okoli profila po EN1992-1 točka 6.7 in EN1993-1-8, točka 6.2.5

**Enačbe**

$$f_{jd} = \frac{\beta_j \, k_j \, \alpha_{cc} \, f_{ck}}{\gamma_c}$$

$$\sigma = \frac{N}{A_{eff}}$$

$$\text{Izkoriščenost} = \frac{\sigma}{f_{jd}}$$

**Spremenljivke**

| N [kN] | $A_{eff}$ [mm²] | $\beta_j$ | $k_j$ | $\alpha_{cc}$ | $f_{ck}$ [N/mm²] | $\gamma_c$ |
|---|---|---|---|---|---|---|
| 339,814 | 23.366 | 0,67 | 3,00 | 0,85 | 25,00 | 1,50 |

**Rezultati**

| $\sigma$ [N/mm²] | $f_{jd}$ [N/mm²] | Izkoriščenost [%] | Status |
|---|---|---|---|
| 14,54 | 28,48 | 52 | OK |

Vhodne podatke in rezultate je potrebno preveriti glede skladnosti z obstoječimi pogoji in verodostojnosti!
PROFIS Engineering ( c ) 2003-2025 Hilti AG, FL-9494 Schaan Hilti je registrirana blagovna znamka Hilti AG, Schaan

| | | | |
|---|---|---|---|
| Podjetje: | RAZPON d.o.o. | Stran: | 15 |
| Naslov: | Tehnološki park 20, 1000 Ljubljana | Projektant: | Igor Gorup |
| Telefon I Faks: | +38616203366 \| | E-mail: | igor.gorup@razpon.si |
| Projektiranje: | Beton - 12. Juni 2025 | Datum: | 13.06.2025 |
| Točka pritrjevanja: | Sidranje S3 | | |

### 2.7 Pomen simbolov

| | |
|---|---|
| a | Debelina zvara |
| $a_b$ | Faktor |
| $\alpha_{cc}$ | Dolgotrajne posledice na maksimalno trdnost betona |
| $A_{eff}$ | Efektivna površina |
| $a_{min}$ | Minimalna debelina zvara |
| $\beta_j$ | Koeficient spoja $\beta_j$ |
| $\beta_w$ | Korelacijski faktor EN 1993-1-8 tab. 4.1 |
| d | Nominalni premer vijaka |
| $\varepsilon_{lim}$ | Mejna plastična deformacija |
| $\varepsilon_{Pl}$ | Plastična deformacija po CBFEM |
| $F_{b,Rd}$ | Odpornost ležiščne pločevine EN 1993-1-8 tab. 3.4 |
| $f_{ck}$ | Karakteristična tlačna trdnost betona |
| $f_{jd}$ | Mejna odpornost betonske kocke |
| $f_u$ | Mejna odpornost |
| $f_y$ | Meja tečenja |
| $\gamma_c$ | Faktor uporabe - SP 16, Tabela 41 |
| $\gamma_{M0}$ | Varnostni faktor jekla gamma M0 |
| $\gamma_{M2}$ | Varnostni faktor jekla gamma M2 |
| $k_1$ | Faktor oddaljenosti od roba in razmak med vijaki pravokotno na smer prenosa obremenitve - EN 1993-1-8 - Tabela 3.4 |
| $k_j$ | Faktor koncentracije |
| L | Dolžina zvara |
| N | Rezultanta tlačne sile |
| $\sigma$ | Povprečna napetost v betonu |
| $\sigma_\perp$ | Pravokotne napetosti |
| $\sigma_{\perp,Rd}$ | Odpornost na pravokotne napetosti |
| $\sigma_{Ed}$ | Nadomestna napetost |
| $\sigma_{w,Ed}$ | Nadomestna napetost |
| $\sigma_{w,Rd}$ | Odpornost nadomestne napetosti |
| t | Debelina ležiščne pločevine |
| $\tau_\perp$ | Strižna napetost pravokotno na os zvara |
| $\tau_{\parallel}$ | Strižna napetost pravokotno na os zvara |
| Izkoriščenost$_c$ | Izkoriščenost zvarov |
| $V_{Ed}$ | Strižna sila na sidro |

### 2.8 Opozorila

- Z uporabo funkcionalnosti podajne ležiščne pločevine programa PROFIS Engineering ste mogoče izven okvirov standarda in vaša specificirana ležiščna pločevina se ne bo obnašala togo. Prosimo vas, da preverite rezultate s kompetentnim odgovornim projektantom za zagotovitev primernosti in ustreznosti za vaše specifične pristojnosti in projektne zahteve.
- Sidro je modelirano z upoštevanjem togosti določene iz grafov obremenitev-deformacija, na podlagi testov v neodvisnih laboratorijih. Upoštevajte, da enostavna zamenjava sidra ni mogoča, saj togost sidra močno vpliva na rezultate porazdelitve obtežbe.

Vhodne podatke in rezultate je potrebno preveriti glede skladnosti z obstoječimi pogoji in verodostojnosti!
PROFIS Engineering ( c ) 2003-2025 Hilti AG, FL-9494 Schaan Hilti je registrirana blagovna znamka Hilti AG, Schaan

| | | | |
|---|---|---|---|
| Podjetje: | RAZPON d.o.o. | Stran: | 16 |
| Naslov: | Tehnološki park 20, 1000 Ljubljana | Projektant: | Igor Gorup |
| Telefon I Faks: | +38616203366 \| | E-mail: | igor.gorup@razpon.si |
| Projektiranje: | Beton - 12. Juni 2025 | Datum: | 13.06.2025 |
| Točka pritrjevanja: | Sidranje S3 | | |

## 3 Povzetek rezultatov

Izračun ležiščne pločevine, sider, zvarov in ostalih elementov je zasnovan po metodi CBFEM (metoda končnih elementov z upoštevanjem posameznih komponent) in regulativ iz Evrokoda.

| | Obtežna kombinacija | Maks. izkoriščenost | Status |
|---|---|---|---|
| Sidra | Kombination 1 | 75% | OK |
| Ležiščna pločevina | Kombination 1 | 63% | OK |
| Zvari | Kombination 1 | 99% | OK |
| Beton | Kombination 1 | 52% | OK |
| Profil | Kombination 1 | 98% | OK |

**Izbrano pritrjevanje ustreza projektnim pogojem!**

Vhodne podatke in rezultate je potrebno preveriti glede skladnosti z obstoječimi pogoji in verodostojnosti!
PROFIS Engineering ( c ) 2003-2025 Hilti AG, FL-9494 Schaan Hilti je registrirana blagovna znamka Hilti AG, Schaan

| | | | |
|---|---|---|---|
| Podjetje: | RAZPON d.o.o. | Stran: | 17 |
| Naslov: | Tehnološki park 20, 1000 Ljubljana | Projektant: | Igor Gorup |
| Telefon I Faks: | +38616203366 \| | E-mail: | igor.gorup@razpon.si |
| Projektiranje: | Beton - 12. Juni 2025 | Datum: | 13.06.2025 |
| Točka pritrjevanja: | Sidranje S3 | | |

## 4 Opombe; Vaše dolžnosti sodelovanja

- Vse informacije in podatki, ki jih vsebuje programska oprema, se nanašajo izključno na uporabo izdelkov Hilti in temeljijo na načelih, formulah in varnostnih predpisih v skladu s tehničnimi navodili podjetja Hilti ter navodili za uporabo, montažo in montažo itd. ki jih mora uporabnik dosledno upoštevati. Vse vsebovane vrednosti so povprečne številke, zato je treba pred uporabo ustreznega izdelka Hilti opraviti preskuse, specifične za uporabo. Rezultati izračunov s programsko opremo v osnovi temeljijo na podatkih, ki jih vnesete. Zato prevzemate vso odgovornost za odsotnost napak, popolnost in ustreznost podatkov, ki jih morate vnesti. Poleg tega prevzemate vso odgovornost za to, da rezultate izračunov pregleda in popravi strokovnjak, zlasti glede skladnosti z veljavnimi normativi in dovoljenji, preden jih uporabite za svoj specifični objekt. Programska oprema služi le kot pomoč pri razlagi norm in dovoljenj brez kakršnega koli jamstva o odsotnosti napak, pravilnosti in ustreznosti rezultatov ali primernosti za določeno aplikacijo.
- Za preprečevanje ali omejitev škode, ki jo povzroča programska oprema, morate sprejeti vse potrebne in razumne ukrepe. Zlasti morate poskrbeti za redno varnostno kopiranje izračunov in podatkov ter po potrebi redno posodabljati programsko opremo, ki jo ponuja Hilti. Če ne uporabljate funkcije AutoUpdate programske opreme, morate z uporabo ročnih posodobitev prek spletnega mesta Hilti zagotoviti, da uporabljate trenutno in posodobljeno različico programske opreme. Hilti ne bo odgovoren za posledice, kot so obnovitev izgubljenih ali poškodovanih podatkov ali programov, ki so posledica krivdne kršitve dolžnosti.

Vhodne podatke in rezultate je potrebno preveriti glede skladnosti z obstoječimi pogoji in verodostojnosti!
PROFIS Engineering ( c ) 2003-2025 Hilti AG, FL-9494 Schaan Hilti je registrirana blagovna znamka Hilti AG, Schaan

| | | | |
|---|---|---|---|
| Podjetje: | RAZPON d.o.o. | Stran: | 1 |
| Naslov: | Tehnološki park 20, 1000 Ljubljana | Projektant: | Igor Gorup |
| Telefon I Faks: | +38616203366 \| | E-mail: | igor.gorup@razpon.si |
| Projektiranje: | Beton - 13. Juni 2025 | Datum: | 25.06.2025 |
| Točka pritrjevanja: | Sidranje S4 | | |

**Komentar projektanta:**

# 1 Izračun detajla sidranja

## 1.1 Vhodni podatki

| | |
|---|---|
| **Tip in velikost sidra:** | **HIT-RE 500 V4 + HAS Meter 8.8 M30** |
| Povratna doba (življenjska doba v letih): | 50 |
| Številka artikla: | 2390172 HAS 8.8 M30x1000 (element) / 2287557 HIT-RE 500 V4 (kemično sidro) |
| Specification text: | Hilti AM 8.8 Gewindestange with HIT-RE 500 V4 Injektionssystem with 500 mm embedment hef, M30, Stahl galvanisiert, Hammerbohren installation per ETA 20/0541, |
| Efektivna sidrna globina: | $h_{ef,act}$ = 500,0 mm ($h_{ef,limit}$ = - mm) |
| Material: | 8.8 |
| Tehnična ocena artikla: | ETA 20/0541 |
| Izdano I Veljavno: | 09.06.2023 \| - |
| Kontrola: | Projektna metoda EN 1992-4, Kemično sidro |
| Vgradnja z nadvišanjem: | $e_b$ = 0,0 mm (brez nadvišanja); t = 30,0 mm |
| Ležiščna pločevina[CBFEM] : | $l_x$ x $l_y$ x t = 440,0 mm x 440,0 mm x 30,0 mm; |
| Profil: | IPB/HEB, IPB 260 / HE 260 B; (L x W x T x FT) = 260,0 mm x 260,0 mm x 10,0 mm x 17,5 mm |
| Osnovni material: | razpokan beton, C25/30, $f_{c,cyl}$ = 25,00 N/mm$^2$; h =1.000,0 mm, Temp. kratko./dolgo.: 40/24 °C, delni varnostni faktor materiala $\gamma_c$ = 1,500 |
| **Vgradnja:** | **Hammer drilled hole, Pogoji vgradnje: Suho** |
| Ojačitev: | brez armature ali razmak med armaturo >= 150 mm (any Ø) or >= 100 mm (Ø <= 10 mm)<br>z vzdolžno armaturo po robu betona d >= 12,0 [mm] + gosta mreža (armatura, obešala) s <= 100,0 [mm]<br>Prisotna je armatura za kontrolo cepitve betona v skladu s standardom EN 1992-4, 7.2.1.7 (2) b) 2) |

[CBFEM] - Izračun sider temelji na metodi končnih elementov z upoštevanjem posameznih komponent (CBFEM)

**Geometrija [mm] & Obtežba [kN, kNm]**

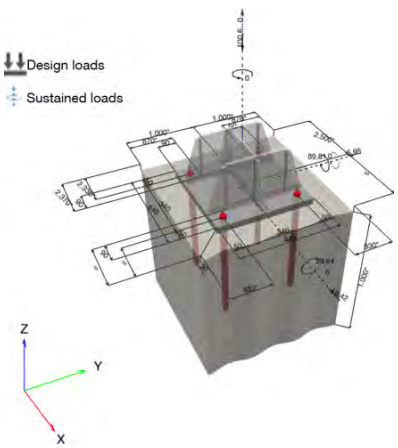


Vhodne podatke in rezultate je potrebno preveriti glede skladnosti z obstoječimi pogoji in verodostojnosti!
PROFIS Engineering ( c ) 2003-2025 Hilti AG, FL-9494 Schaan Hilti je registrirana blagovna znamka Hilti AG, Schaan

| | | | |
|---|---|---|---|
| Podjetje: | RAZPON d.o.o. | Stran: | 2 |
| Naslov: | Tehnološki park 20, 1000 Ljubljana | Projektant: | Igor Gorup |
| Telefon I Faks: | +38616203366 \| | E-mail: | igor.gorup@razpon.si |
| Projektiranje: | Beton - 13. Juni 2025 | Datum: | 25.06.2025 |
| Točka pritrjevanja: | Sidranje S4 | | |

### 1.1.1 Obtežna kombinacija

| Primer | Opis | Sile [kN] / Momenti [kNm] | Potresno | požar | Izkoriščenost [%] |
|---|---|---|---|---|---|
| 1 | Kombination 2 | N = −100,600; $V_x$ = −19,420; $V_y$ = −5,950; $M_x$ = −28,640; $M_y$ = 89,810; $M_z$ = 0,000; $N_{sus}$ = 0,000; $M_{x,sus}$ = 0,000; $M_{y,sus}$ = 0,000; | ne | ne | 68 |

### 1.2 Obtežni primer/Rezultante sil v sidru

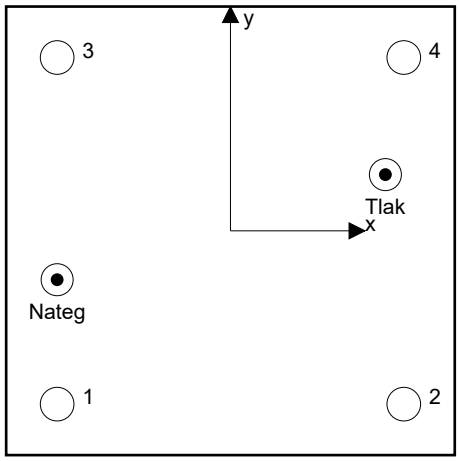


**Reakcije v sidru [kN]**
Natezna sila: (+Nateg, -Tlak)

| Sidro | Natezna sila | Strižna sila | Strižna sila x | Strižna sila y |
|---|---|---|---|---|
| 1 | 151,203 | 4,764 | −4,764 | −0,007 |
| 2 | −0,006 | 5,361 | −4,910 | −2,153 |
| 3 | 84,669 | 5,673 | −4,857 | −2,932 |
| 4 | −0,015 | 4,963 | −4,889 | −0,857 |

Resulting tension force in (x/y)=(−170,0/−48,0): 235,851 [kN]
Resulting compression force in (x/y)=(152,0/55,1): 339,934 [kN]

Sile v sidru so izračunane po metodi končnih elementov z upoštevanjem posameznih komponent (CBFEM)

Vhodne podatke in rezultate je potrebno preveriti glede skladnosti z obstoječimi pogoji in verodostojnosti!
PROFIS Engineering ( c ) 2003-2025 Hilti AG, FL-9494 Schaan Hilti je registrirana blagovna znamka Hilti AG, Schaan

| | | | |
|---|---|---|---|
| Podjetje: | RAZPON d.o.o. | Stran: | 3 |
| Naslov: | Tehnološki park 20, 1000 Ljubljana | Projektant: | Igor Gorup |
| Telefon I Faks: | +38616203366 \| | E-mail: | igor.gorup@razpon.si |
| Projektiranje: | Beton - 13. Juni 2025 | Datum: | 25.06.2025 |
| Točka pritrjevanja: | Sidranje S4 | | |

### 1.3 Natezna obremenitev (EN 1992-4, Točka 7.2.1)

| | Obtežba [kN] | Kapaciteta [kN] | Izkoriščenost $\beta_N$ [%] | Status |
|---|---|---|---|---|
| Nosilnost jekla* | 151,203 | 299,200 | 51 | OK |
| Kombinacija izvleka sidra in betonskega konusa** | 235,872 | 349,538 | 68 | OK |
| Porušitev po konusu betona** | 235,872 | 512,573 | 47 | OK |
| Cepitev betona** | N/A | N/A | N/A | N/A |

*najbolj obremenjeno sidro **skupina sider (natezno obremenjena sidra)

#### 1.3.1 Nosilnost jekla

$$N_{Ed} \leq N_{Rd,s} = \frac{N_{Rk,s}}{\gamma_{Ms}}$$ EN 1992-4, Tabela 7.1

| $N_{Rk,s}$ [kN] | $\gamma_{Ms}$ | $N_{Rd,s}$ [kN] | $N_{Ed}$ [kN] |
|---|---|---|---|
| 448,800 | 1,500 | 299,200 | 151,203 |

Vhodne podatke in rezultate je potrebno preveriti glede skladnosti z obstoječimi pogoji in verodostojnosti!
PROFIS Engineering ( c ) 2003-2025 Hilti AG, FL-9494 Schaan Hilti je registrirana blagovna znamka Hilti AG, Schaan

| | | | |
|---|---|---|---|
| Podjetje: | RAZPON d.o.o. | Stran: | 4 |
| Naslov: | Tehnološki park 20, 1000 Ljubljana | Projektant: | Igor Gorup |
| Telefon I Faks: | +38616203366 \| | E-mail: | igor.gorup@razpon.si |
| Projektiranje: | Beton - 13. Juni 2025 | Datum: | 25.06.2025 |
| Točka pritrjevanja: | Sidranje S4 | | |

### 1.3.2 Kombinacija izvleka sidra in betonskega konusa

$N_{Ed} \le N_{Rd,p} = \frac{N_{Rk,p}}{\gamma_{Mp}}$ EN 1992-4, Tabela 7.1

$N_{Rk,p} = N^0_{Rk,p} \cdot \frac{A_{p,N}}{A^0_{p,N}} \cdot \psi_{g,Np} \cdot \psi_{s,Np} \cdot \psi_{re,Np} \cdot \psi_{ec1,Np} \cdot \psi_{ec2,Np}$ EN 1992-4, Enačba (7.13)

$N^0_{Rk,p} = \psi_{sus} \cdot \tau_{Rk} \cdot \pi \cdot d \cdot h_{ef}$ EN 1992-4, Enačba (7.14)

$\psi_{sus} = 1$ EN 1992-4, Enačba (7.14a)

$s_{cr,Np} = 7{,}3 \cdot d \cdot \sqrt{\psi_{sus} \cdot \tau_{Rk}} \le 3 \cdot h_{ef}$ EN 1992-4, Enačba (7.15)

$\psi_{g,Np} = \psi^0_{g,Np} - \left(\frac{s}{s_{cr,Np}}\right)^{0,5} \cdot \left(\psi^0_{g,Np} - 1\right) \ge 1{,}00$ EN 1992-4, Enačba (7.17)

$\psi^0_{g,Np} = \sqrt{n} - (\sqrt{n} - 1) \cdot \left(\frac{\tau_{Rk}}{\tau_{Rk,c}}\right)^{1,5} \ge 1{,}00$ EN 1992-4, Enačba (7.18)

$\tau_{Rk,c} = \frac{k_3}{\pi \cdot d} \cdot \sqrt{h_{ef} \cdot f_{ck}}$ EN 1992-4, Enačba (7.19)

$\psi_{s,Np} = 0{,}7 + 0{,}3 \cdot \frac{c}{c_{cr,Np}} \le 1{,}00$ EN 1992-4, Enačba (7.20)

$\psi_{ec1,Np} = \frac{1}{1 + \left(\frac{2 \cdot e_{c1,N}}{s_{cr,Np}}\right)} \le 1{,}00$ EN 1992-4, Enačba (7.21)

$\psi_{ec2,Np} = \frac{1}{1 + \left(\frac{2 \cdot e_{c2,N}}{s_{cr,Np}}\right)} \le 1{,}00$ EN 1992-4, Enačba (7.21)

| $A_{p,N}$ [mm²] | $A^0_{p,N}$ [mm²] | $\tau_{Rk,ucr,20}$ [N/mm²] | $s_{cr,Np}$ [mm] | $c_{cr,Np}$ [mm] | $c_{min}$ [mm] | $f_{c,cyl}$ [N/mm²] |
|---|---|---|---|---|---|---|
| 950.058 | 671.454 | 14,00 | 819,4 | 409,7 | 830,0 | 25,00 |

| $\psi_c$ | $\tau_{Rk,cr}$ [N/mm²] | $k_3$ | $\tau_{Rk,c}$ [N/mm²] | $\psi^0_{g,Np}$ | $\psi_{g,Np}$ |
|---|---|---|---|---|---|
| 1,023 | 8,69 | 7,700 | 9,13 | 1,030 | 1,011 |

| $e_{c1,N}$ [mm] | $\psi_{ec1,Np}$ | $e_{c2,N}$ [mm] | $\psi_{ec2,Np}$ | $\psi_{s,Np}$ | $\psi_{re,Np}$ |
|---|---|---|---|---|---|
| 0,0 | 1,000 | 48,0 | 0,895 | 1,000 | 1,000 |

| $\psi^0_{sus}$ | $\alpha_{sus}$ | $\psi_{sus}$ |
|---|---|---|
| 0,880 | 0,000 | 1,000 |

| $N^0_{Rk,p}$ [kN] | $N_{Rk,p}$ [kN] | $\gamma_{Mp}$ | $N_{Rd,p}$ [kN] | $N_{Ed}$ [kN] |
|---|---|---|---|---|
| 409,592 | 524,307 | 1,500 | 349,538 | 235,872 |

| ID skupine sider |
|---|
| 1, 3 |

Vhodne podatke in rezultate je potrebno preveriti glede skladnosti z obstoječimi pogoji in verodostojnosti!
PROFIS Engineering ( c ) 2003-2025 Hilti AG, FL-9494 Schaan Hilti je registrirana blagovna znamka Hilti AG, Schaan

| | | | |
|---|---|---|---|
| Podjetje: | RAZPON d.o.o. | Stran: | 5 |
| Naslov: | Tehnološki park 20, 1000 Ljubljana | Projektant: | Igor Gorup |
| Telefon I Faks: | +38616203366 \| | E-mail: | igor.gorup@razpon.si |
| Projektiranje: | Beton - 13. Juni 2025 | Datum: | 25.06.2025 |
| Točka pritrjevanja: | Sidranje S4 | | |

### 1.3.3 Porušitev po konusu betona

$$N_{Ed} \le N_{Rd,c} = \frac{N_{Rk,c}}{\gamma_{Mc}}$$ EN 1992-4, Tabela 7.1

$$N_{Rk,c} = N^0_{Rk,c} \cdot \frac{A_{c,N}}{A^0_{c,N}} \cdot \psi_{s,N} \cdot \psi_{re,N} \cdot \psi_{ec1,N} \cdot \psi_{ec2,N} \cdot \psi_{M,N}$$ EN 1992-4, Enačba (7.1)

$$N^0_{Rk,c} = k_1 \cdot \sqrt{f_{ck}} \cdot h_{ef}^{1,5}$$ EN 1992-4, Enačba (7.2)

$$A^0_{c,N} = s_{cr,N} \cdot s_{cr,N}$$ EN 1992-4, Enačba (7.3)

$$\psi_{s,N} = 0,7 + 0,3 \cdot \frac{c}{c_{cr,N}} \le 1,00$$ EN 1992-4, Enačba (7.4)

$$\psi_{ec1,N} = \frac{1}{1 + \left(\frac{2 \cdot e_{N,1}}{s_{cr,N}}\right)} \le 1,00$$ EN 1992-4, Enačba (7.6)

$$\psi_{ec2,N} = \frac{1}{1 + \left(\frac{2 \cdot e_{N,2}}{s_{cr,N}}\right)} \le 1,00$$ EN 1992-4, Enačba (7.6)

$$\psi_{M,N} = 2,0 - \frac{z}{1,5 \cdot h_{ef}} \ge 1,00$$ EN 1992-4, Enačba (7.7)

| $A_{c,N}$ [mm²] | $A^0_{c,N}$ [mm²] | $c_{cr,N}$ [mm] | $s_{cr,N}$ [mm] | $f_{c,cyl}$ [N/mm²] | | |
|---|---|---|---|---|---|---|
| 2.760.000 | 2.250.000 | 750,0 | 1.500,0 | 25,00 | | |
| $e_{c1,N}$ [mm] | $\psi_{ec1,N}$ | $e_{c2,N}$ [mm] | $\psi_{ec2,N}$ | $\psi_{s,N}$ | $\psi_{re,N}$ | z [mm] |
| 0,0 | 1,000 | 48,0 | 0,940 | 1,000 | 1,000 | 338,1 |
| $\psi_{M,N}$ | $k_1$ | $N^0_{Rk,c}$ [kN] | $\gamma_{Mc}$ | $N_{Rd,c}$ [kN] | $N_{Ed}$ [kN] | |
| 1,549 | 7,700 | 430,443 | 1,500 | 512,573 | 235,872 | |

| ID skupine sider |
|---|
| 1, 3 |

Vhodne podatke in rezultate je potrebno preveriti glede skladnosti z obstoječimi pogoji in verodostojnosti!
PROFIS Engineering ( c ) 2003-2025 Hilti AG, FL-9494 Schaan Hilti je registrirana blagovna znamka Hilti AG, Schaan

| | | | |
|---|---|---|---|
| Podjetje: | RAZPON d.o.o. | Stran: | 6 |
| Naslov: | Tehnološki park 20, 1000 Ljubljana | Projektant: | Igor Gorup |
| Telefon I Faks: | +38616203366 \| | E-mail: | igor.gorup@razpon.si |
| Projektiranje: | Beton - 13. Juni 2025 | Datum: | 25.06.2025 |
| Točka pritrjevanja: | Sidranje S4 | | |

### 1.4 Strižna obremenitev (EN 1992-4, Točka 7.2.2)

| | Obtežba [kN] | Kapaciteta [kN] | Izkoriščenost $\beta_V$ [%] | Status |
|---|---|---|---|---|
| Nosilnost jekla (brez nadvišanja)* | 5,673 | 179,520 | 4 | OK |
| Porušitev po jeklu (z nadvišanjem)* | N/A | N/A | N/A | N/A |
| Nosilnost na iztrga betona** | 20,311 | 863,590 | 3 | OK |
| Porušitev po robu betona v smeri x-** | 19,641 | 215,098 | 10 | OK |

*najbolj obremenjeno sidro **skupina sider (relevantna sidra)
When the input edge distance is set to "infinity", edge breakout verification is not performed in that direction

#### 1.4.1 Nosilnost jekla (brez nadvišanja)

$V_{Ed} \le V_{Rd,s} = \frac{V_{Rk,s}}{\gamma_{Ms}}$ EN 1992-4, Tabela 7.2

$V_{Rk,s} = k_7 \cdot V^0_{Rk,s}$ EN 1992-4, Enačba (7.35)

| $V^0_{Rk,s}$ [kN] | $k_7$ | $V_{Rk,s}$ [kN] | $\gamma_{Ms}$ | $V_{Rd,s}$ [kN] | $V_{Ed}$ [kN] |
|---|---|---|---|---|---|
| 224,400 | 1,000 | 224,400 | 1,250 | 179,520 | 5,673 |

#### 1.4.2 Nosilnost na iztrga betona (merodajna nosilnost betona)

$V_{Ed} \le V_{Rd,cp} = \frac{V_{Rk,cp}}{\gamma_{Mc,p}}$ EN 1992-4, Tabela 7.2

$V_{Rk,cp} = k_8 \cdot \min\{N_{Rk,c}; N_{Rk,p}\}$ EN 1992-4, Enačba (7.39c)

$N_{Rk,c} = N^0_{Rk,c} \cdot \frac{A_{c,N}}{A^0_{c,N}} \cdot \psi_{s,N} \cdot \psi_{re,N} \cdot \psi_{ec1,N} \cdot \psi_{ec2,N} \cdot \psi_{M,N}$ EN 1992-4, Enačba (7.1)

$N^0_{Rk,c} = k_1 \cdot \sqrt{f_{ck}} \cdot h_{ef}^{1,5}$ EN 1992-4, Enačba (7.2)

$A^0_{c,N} = s_{cr,N} \cdot s_{cr,N}$ EN 1992-4, Enačba (7.3)

$\psi_{s,N} = 0,7 + 0,3 \cdot \frac{c}{c_{cr,N}} \le 1,00$ EN 1992-4, Enačba (7.4)

$\psi_{ec1,N} = \frac{1}{1 + \left(\frac{2 \cdot e_{V,1}}{s_{cr,N}}\right)} \le 1,00$ EN 1992-4, Enačba (7.6)

$\psi_{ec2,N} = \frac{1}{1 + \left(\frac{2 \cdot e_{V,2}}{s_{cr,N}}\right)} \le 1,00$ EN 1992-4, Enačba (7.6)

$\psi_{M,N} = 1$ EN 1992-4, Enačba (7.7)

| $A_{c,N}$ [mm²] | $A^0_{c,N}$ [mm²] | $c_{cr,N}$ [mm] | $s_{cr,N}$ [mm] | $k_8$ | $f_{c,cyl}$ [N/mm²] |
|---|---|---|---|---|---|
| 3.385.600 | 2.250.000 | 750,0 | 1.500,0 | 2,000 | 25,00 |

| $e_{c1,V}$ [mm] | $\psi_{ec1,N}$ | $e_{c2,V}$ [mm] | $\psi_{ec2,N}$ | $\psi_{s,N}$ | $\psi_{re,N}$ | $\psi_{M,N}$ |
|---|---|---|---|---|---|---|
| 0,0 | 1,000 | 0,0 | 1,000 | 1,000 | 1,000 | 1,000 |

| $k_1$ | $N^0_{Rk,c}$ [kN] | $\gamma_{Mc,p}$ | $V_{Rd,cp}$ [kN] | $V_{Ed}$ [kN] |
|---|---|---|---|---|
| 7,700 | 430,443 | 1,500 | 863,590 | 20,311 |

| ID skupine sider |
|---|
| 1-4 |

Vhodne podatke in rezultate je potrebno preveriti glede skladnosti z obstoječimi pogoji in verodostojnosti!
PROFIS Engineering ( c ) 2003-2025 Hilti AG, FL-9494 Schaan Hilti je registrirana blagovna znamka Hilti AG, Schaan

| | | | |
|---|---|---|---|
| Podjetje: | RAZPON d.o.o. | Stran: | 7 |
| Naslov: | Tehnološki park 20, 1000 Ljubljana | Projektant: | Igor Gorup |
| Telefon I Faks: | +38616203366 \| | E-mail: | igor.gorup@razpon.si |
| Projektiranje: | Beton - 13. Juni 2025 | Datum: | 25.06.2025 |
| Točka pritrjevanja: | Sidranje S4 | | |

### 1.4.3 Porušitev po robu betona v smeri x-

$V_{Ed} \le V_{Rd,c} = \frac{V_{Rk,c}}{\gamma_{Mc}}$ EN 1992-4, Tabela 7.2

$V_{Rk,c} = k_T \cdot V^0_{Rk,c} \cdot \frac{A_{c,V}}{A^0_{c,V}} \cdot \psi_{s,V} \cdot \psi_{h,V} \cdot \psi_{\alpha,V} \cdot \psi_{ec,V} \cdot \psi_{re,V}$ EN 1992-4, Enačba (7.40)

$V^0_{Rk,c} = k_9 \cdot d_{nom}^{\alpha} \cdot l_f^{\beta} \cdot \sqrt{f_{ck}} \cdot c_1^{1,5}$ EN 1992-4, Enačba (7.41)

$\alpha = 0,1 \cdot \left(\frac{l_f}{c_1}\right)^{0,5}$ EN 1992-4, Enačba (7.42)

$\beta = 0,1 \cdot \left(\frac{d_{nom}}{c_1}\right)^{0,2}$ EN 1992-4, Enačba (7.43)

$A^0_{c,V} = 4,5 \cdot c_1^2$ EN 1992-4, Enačba (7.44)

$\psi_{s,V} = 0,7 + 0,3 \cdot \frac{c_2}{1,5 \cdot c_1} \le 1,00$ EN 1992-4, Enačba (7.45)

$\psi_{h,V} = \left(\frac{1,5 \cdot c_1}{h}\right)^{0,5} \ge 1,00$ EN 1992-4, Enačba (7.46)

$\psi_{ec,V} = \frac{1}{1 + \left(\frac{2 \cdot e_V}{3 \cdot c_1}\right)} \le 1,00$ EN 1992-4, Enačba (7.47)

$\psi_{\alpha,V} = \sqrt{\frac{1}{(\cos \alpha_V)^2 + (0,5 \cdot \sin \alpha_V)^2}} \ge 1,00$ EN 1992-4, Enačba (7.48)

$c_1' = \max\left(\frac{c_{2,max}}{1,5}; \frac{h}{1,5}; \frac{s_{2,max}}{3}\right)$ EN 1992-4, Enačba (7.50))

| $l_f$ [mm] | $d_{nom}$ [mm] | $k_9$ | $\alpha$ | $\beta$ | $f_{c,cyl}$ [N/mm²] | $c_1$ [mm] |
|---|---|---|---|---|---|---|
| 240,0 | 30,00 | 1,700 | 0,060 | 0,054 | 25,00 | 2.330,0 |

| $c_1'$ [mm] | $A_{c,V}$ [mm²] | $A^0_{c,V}$ [mm²] | $\psi_{s,V}$ | $\psi_{h,V}$ | $e_{c,V}$ [mm] | $\psi_{ec,V}$ |
|---|---|---|---|---|---|---|
| 666,7 | 2.000.000 | 2.000.000 | 0,949 | 1,000 | 0,6 | 0,999 |

| $\alpha_V$ [°] | $\psi_{\alpha,V}$ | $\psi_{re,V}$ |
|---|---|---|
| 8,61 | 1,009 | 1,400 |

| $V^0_{Rk,c}$ [kN] | $k_T$ | $\gamma_{Mc}$ | $V_{Rd,c}$ [kN] | $V_{Ed}$ [kN] |
|---|---|---|---|---|
| 240,948 | 1,0 | 1,500 | 215,098 | 19,641 |

| ID skupine sider |
|---|
| 1, 3 |

When the input edge distance is set to "infinity", edge breakout verification is not performed in that direction

Vhodne podatke in rezultate je potrebno preveriti glede skladnosti z obstoječimi pogoji in verodostojnosti!
PROFIS Engineering ( c ) 2003-2025 Hilti AG, FL-9494 Schaan Hilti je registrirana blagovna znamka Hilti AG, Schaan

| | | | |
|---|---|---|---|
| Podjetje: | RAZPON d.o.o. | Stran: | 8 |
| Naslov: | Tehnološki park 20, 1000 Ljubljana | Projektant: | Igor Gorup |
| Telefon I Faks: | +38616203366 \| | E-mail: | igor.gorup@razpon.si |
| Projektiranje: | Beton - 13. Juni 2025 | Datum: | 25.06.2025 |
| Točka pritrjevanja: | Sidranje S4 | | |

### 1.5 Kombinacija nateznih in strižnih obremenitev (EN 1992-4-4, del 7.2.3)

Porušitev jekla

| $\beta_N$ | $\beta_V$ | $\alpha$ | Izkoriščenost $\beta_{N,V}$ [%] | Status |
|---|---|---|---|---|
| 0,505 | 0,027 | 2,000 | 26 | OK |

$\beta_N^{\alpha} + \beta_V^{\alpha} \leq 1{,}0$

Porušitev betona

| $\beta_N$ | $\beta_V$ | $\alpha$ | Izkoriščenost $\beta_{N,V}$ [%] | Status |
|---|---|---|---|---|
| 0,675 | 0,091 | 1,500 | 59 | OK |

$\beta_N^{\alpha} + \beta_V^{\alpha} \leq 1{,}0$

### 1.6 Opozorila

- Projektne metode v programski opremi PROFIS Engineering zahtevajo uporabo absolutno toge ležiščne pločevine v skladu z regulativami (ETAG 001/Annex C, EOTA TR029, itd.). To pomeni, da se porazdelitev obremenitve na sidra zaradi elastičnih deformacij sidrne plošče ne upošteva - predpostavlja se, da je ležiščna pločevina toga, da se ne deformira, v primeru delovanja projektne obtežbe. PROFIS Engineering izračuna najmanjšo potrebno debelino ležiščne pločevine s CBFEM metodo za omejitev napetosti v ležiščni pločevini na podlagi zgornjih predpostavk. PROFIS Engineering ne dokazuje, da je predpostavka o togi ležiščni pločevini pravilna. Vhodne podatke in rezultate je potrebno preveriti, da so v skladu z obstoječimi pogoji in verodostojnosti!
- The equations presented in this report are based on metric units. When inputs are displayed in imperial units, the user should be aware that the equations remain in their metric format.
- Potrebno je opraviti kontrolo prenosa obtežbe v osnovni material po EN 1992-4, Dodatek A!
- Pozor! V primeru tlačne sile, ki deluje na sidra, je potrebno posebej opraviti še dve kontroli in sicer kontrolo uklona in lokalni vnos obtežbe v osnovni material.
- Izračun je veljaven samo v primeru, če luknja v ležiščni pločevini ni večja od vrednosti podane v Tabeli 6.1 of EN 1992-4!! Za večje premere izvrtin glej točko 6.2.2 of EN 1992-4!
- Seznam dodatne opreme v tem poročilu je samo za informacije uporabnika. V vsakem primeru je potrebno upoštevati navodila za uporabo, ki so priložena izdelku, da zagotovite pravilno vgradnjo.
- For the determination of the $\psi_{re,v}$ (concrete edge failure) the minimum concrete cover defined in the design settings is used as the concrete cover of the edge reinforcement.
- Karakteristična sprijena trdnost je odvisna od kratkotrajnih in dolgotrajnih temperaturnih obremenitev.
- Armiranje roba betona ni potrebno, da se izognemo cepitvi betona
- Load transfer from supplementary reinforcement to the structural member shall be verified by the responsible structural engineer.
- With supplementary reinforcement and post-installed anchors, please ensure that in the jobsite the rebars are not drilled through.
- Metode projektiranja v programu PROFIS Engineering zahtevajo upoštevanje toge ležiščne pločevine, skladno z veljavnimi predpisi (ETAG 001/Dodatek C, EOTA TR029, itd.). To pomeni, da je ležiščna pločevina absolutno toga in prepreči prerazporeditev obtežbe na sidra zaradi elastičnih/plastičnih pomikov. Uporabnik sprejme, da se ležiščna pločevina po inženirski presoji upošteva kot skoraj toga.
- Karakteristična sprijemna trdnost je odvisna od povratne dobe (servisna doba v letih): 50


PROFIS Engineering ( c ) 2003-2025 Hilti AG, FL-9494 Schaan Hilti je registrirana blagovna znamka Hilti AG, Schaan

| | | | |
|---|---|---|---|
| Podjetje: | RAZPON d.o.o. | Stran: | 9 |
| Naslov: | Tehnološki park 20, 1000 Ljubljana | Projektant: | Igor Gorup |
| Telefon I Faks: | +38616203366 \| | E-mail: | igor.gorup@razpon.si |
| Projektiranje: | Beton - 13. Juni 2025 | Datum: | 25.06.2025 |
| Točka pritrjevanja: | Sidranje S4 | | |

### 1.7 Podatki za vgradnjo

Ležiščna pločevina, jeklo: S 355; E = 210.000,00 N/mm$^2$; $f_{yk}$ = 355,00 N/mm$^2$
Profil: IPB/HEB, IPB 260 / HE 260 B; (L x W x T x FT) = 260,0 mm x 260,0 mm x 10,0 mm x 17,5 mm

Premer luknje v ležiščni plošči: $d_f$ = 33,0 mm

Debelina ležiščne pločevine (vnos): 30,0 mm

Metoda vrtanja: Udarno vrtanje
Čiščenje: Potrebno je čiščenje izvrtine z uporabo stisnjenega zraka v skladu z navodili za uporabo.

Tip in velikost sidra: HIT-RE 500 V4 + HAS Meter 8.8 M30
Številka artikla: 2390172 HAS 8.8 M30x1000 (element) / 2287557 HIT-RE 500 V4 (kemično sidro)

Maximum installation torque: 300 Nm

Globina izvrtine v osnovnem materialu: 35,0 mm

Globina izvrtine v osnovnem materialu: 500,0 mm

Minimalna debelina osnovnega materiala: 570,0 mm

Hilti AM 8.8 threaded rod with HIT-RE 500 V4 injection mortar with 500 mm embedment hef, M30, Steel galvanized, Hammer drill bit installation per ETA 20/0541

#### 1.7.1 Priporočeni dodatki

| Vrtanje | Čiščenje | Vgradnja |
|---|---|---|
| • Primerno vrtalno udarno kladivo<br>• Ustrezen sveder | • Zahtevano izpihovanje s komprimiranim zrakom in ustreznimi pripomočki, za izpihovanje prahu iz dna izvrtine.<br>• Okrogla jeklena ščetka ustreznega premera | • Dozirnik s kaseto in mešalcem<br>• Momentni ključ |

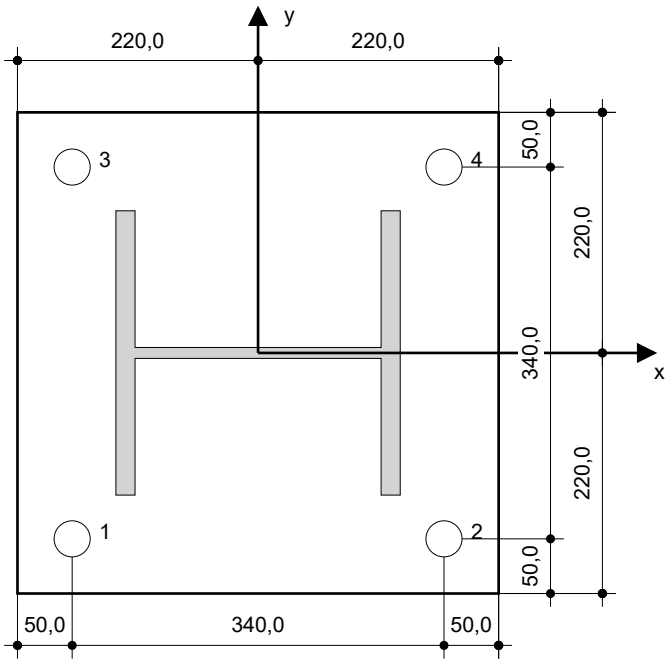


**Koordinate sidra [mm]**

| Sidro | x | y | $c_{-x}$ | $c_{+x}$ | $c_{-y}$ | $c_{+y}$ |
|---|---|---|---|---|---|---|
| 1 | −170,0 | −170,0 | 2.330,0 | - | 830,0 | 1.170,0 |
| 2 | 170,0 | −170,0 | 2.670,0 | - | 830,0 | 1.170,0 |
| 3 | −170,0 | 170,0 | 2.330,0 | - | 1.170,0 | 830,0 |
| 4 | 170,0 | 170,0 | 2.670,0 | - | 1.170,0 | 830,0 |

Vhodne podatke in rezultate je potrebno preveriti glede skladnosti z obstoječimi pogoji in verodostojnosti!
PROFIS Engineering ( c ) 2003-2025 Hilti AG, FL-9494 Schaan Hilti je registrirana blagovna znamka Hilti AG, Schaan

| | | | |
|---|---|---|---|
| Podjetje: | RAZPON d.o.o. | Stran: | 10 |
| Naslov: | Tehnološki park 20, 1000 Ljubljana | Projektant: | Igor Gorup |
| Telefon I Faks: | +38616203366 \| | E-mail: | igor.gorup@razpon.si |
| Projektiranje: | Beton - 13. Juni 2025 | Datum: | 25.06.2025 |
| Točka pritrjevanja: | Sidranje S4 | | |

# 2 Izračun ležiščne pločevine

### 2.1 Vhodni podatki

| | |
|---|---|
| Ležiščna pločevina: | Oblika: Pravokotna<br>$l_x$ x $l_y$ x t = 440,0 mm x 440,0 mm x 30,0 mm<br>Izračun: FEM<br>Material: S 355; $F_y$ = 355,00 N/mm²; $\varepsilon_{lim}$ = 5,00% |
| Tip in velikost sidra: | HIT-RE 500 V4 + HAS Meter 8.8 M30, $h_{ef}$ = 500,0 mm |
| Togost sidra: | Sidro je modelirano z upoštevanjem togosti določene iz grafov obremenitev-deformacija, na podlagi testov v neodvisnih laboratorijih. Upoštevajte, da enostavna zamenjava sidra ni mogoča, saj togost sidra močno vpliva na rezultate porazdelitve obtežbe. |
| Projektna metoda: | EN-based design uporaba MKE z upoštevanjem posameznih komponent |
| Vgradnja z nadvišanjem: | $e_b$ = 0,0 mm (No stand-off); t = 30,0 mm |
| Profil: | IPB 260 / HE 260 B; (L x W x T x FT) = 260,0 mm x 260,0 mm x 10,0 mm x 17,5 mm<br>Material: S 355; $F_y$ = 355,00 N/mm²; $\varepsilon_{lim}$ = 5,00%<br>Ekscentričnost x: 0,0 mm<br>Ekscentričnost y: 0,0 mm |
| Osnovni material: | Cracked concrete; C25/30; $f_{c,cyl}$ = 25,00 N/mm²; h = 1.000,0 mm; E = 31.000,00 N/mm²; G = 12.916,67 N/mm²; v = 0,20 |
| Zvari (profil na ležiščno pločevino): | Tip razporeditve: Plastičen<br>Material: S 355 |
| Toge ojačitve: | Geometrija: Chamfered; velikost = $l_x$ x $l_y$ x t = 200,0 mm x 80,0 mm x 15,0 mm<br>Material: S 355; $F_y$ = 355,00 N/mm²; $\varepsilon_{lim}$ = 5,00% |
| Zvari (toge ojačitve na profil/ležiščno ploščo): | Tip razporeditve: Plastičen<br>Material: S 355 |
| Velikost mreže: | Število elementov na robu: 8<br>Min. velikost elementa: 10,0 mm<br>Maks. velikost elementa: 50,0 mm |

### 2.2 Povzetek

| | Opis | Profil | | Toge ojačitve | | Ležiščna pločevina | | | Zvari [%] | Beton [%] |
|---|---|---|---|---|---|---|---|---|---|---|
| | | $\sigma_{Ed}$ [N/mm²] | $\varepsilon_{Pl}$ [%] | $\sigma_{Ed}$ [N/mm²] | $\varepsilon_{Pl}$ [%] | $\sigma_{Ed}$ [N/mm²] | $\varepsilon_{Pl}$ [%] | Nosilnost pločevine na bočni pritisk v območju luknje [%] | | |
| 1 | Kombination 2 | 174,50 | 0,00 | 219,69 | 0,00 | 192,01 | 0,00 | 2 | 75 | 23 |

### 2.3 Klasifikacija ležiščne pločevine

Spodnji rezultati so prikazani za merodajno obtežno kombinacijo: Kombination 2

| Natezne sile v sidru | Ekvivalentno toga ležiščna pločevina (FEM) | Projektiranje z upoštevanjem podajne ležiščne pločevine (FEM) |
|---|---|---|
| Sidro 1 | 152,330 kN | 151,203 kN |
| Sidro 2 | −0,007 kN | −0,006 kN |
| Sidro 3 | 85,784 kN | 84,669 kN |
| Sidro 4 | −0,016 kN | −0,015 kN |

Uporabnik je sprejel, da je obnašanje ležiščne pločevine 100 % togo, po svoji inženirski presoji.To pomeni, da so lahko uporabljene smernice za dimenzioniranje sider.

### 2.4 Profil/Toge ojačitve/Ležiščna pločevina

Profil in jeklene toge ojačitve so preverjene na ravni povezave jekla z betonom. Projektiranje detajla ne nadomesti projektiranja kritičnega jeklenega prereza, tovrstni izračun mora biti preverjen z drugim programom in ne PROFIS Engineering-om.

Vhodne podatke in rezultate je potrebno preveriti glede skladnosti z obstoječimi pogoji in verodostojnosti!
PROFIS Engineering ( c ) 2003-2025 Hilti AG, FL-9494 Schaan Hilti je registrirana blagovna znamka Hilti AG, Schaan

| | | | |
|---|---|---|---|
| Podjetje: | RAZPON d.o.o. | Stran: | 11 |
| Naslov: | Tehnološki park 20, 1000 Ljubljana | Projektant: | Igor Gorup |
| Telefon I Faks: | +38616203366 \| | E-mail: | igor.gorup@razpon.si |
| Projektiranje: | Beton - 13. Juni 2025 | Datum: | 25.06.2025 |
| Točka pritrjevanja: | Sidranje S4 | | |

### 2.4.1 Nadomestna napetost in plastična deformacija

Kriterij mejnega stanja po EN1993-1-5 Dodatek C.8, (1) 2.

**Rezultati**

| Del | Obtežna kombinacija | Material | $\sigma_{Ed}$ [N/mm²] | $\varepsilon_{Pl}$ [%] | $f_y$ [N/mm²] | $\gamma_{M0}$ | $f_y/\gamma_{M0}$ [N/mm²] | $\varepsilon_{lim}$ [%] | Status |
|---|---|---|---|---|---|---|---|---|---|
| Ležiščna pločevina | Kombination 2 | S 355 | 192,01 | 0,00 | 355,00 | 1,00 | 355,00 | 5,00 | OK |
| Profil | Kombination 2 | S 355 | 174,50 | 0,00 | 355,00 | 1,00 | 355,00 | 5,00 | OK |
| Profil | Kombination 2 | S 355 | 153,35 | 0,00 | 355,00 | 1,00 | 355,00 | 5,00 | OK |
| Profil | Kombination 2 | S 355 | 86,09 | 0,00 | 355,00 | 1,00 | 355,00 | 5,00 | OK |
| Stiffenera | Kombination 2 | S 355 | 42,37 | 0,00 | 355,00 | 1,00 | 355,00 | 5,00 | OK |
| Stiffenerb | Kombination 2 | S 355 | 119,30 | 0,00 | 355,00 | 1,00 | 355,00 | 5,00 | OK |
| Stiffenerc | Kombination 2 | S 355 | 219,69 | 0,00 | 355,00 | 1,00 | 355,00 | 5,00 | OK |
| Stiffenerd | Kombination 2 | S 355 | 125,87 | 0,00 | 355,00 | 1,00 | 355,00 | 5,00 | OK |
| Stiffenere | Kombination 2 | S 355 | 71,66 | 0,00 | 355,00 | 1,00 | 355,00 | 5,00 | OK |
| Stiffenerf | Kombination 2 | S 355 | 109,74 | 0,00 | 355,00 | 1,00 | 355,00 | 5,00 | OK |

#### 2.4.1.1 Nadomestna napetost

Spodnji rezultati so prikazani za merodajno obtežno kombinacijo: 2 - Kombination 2

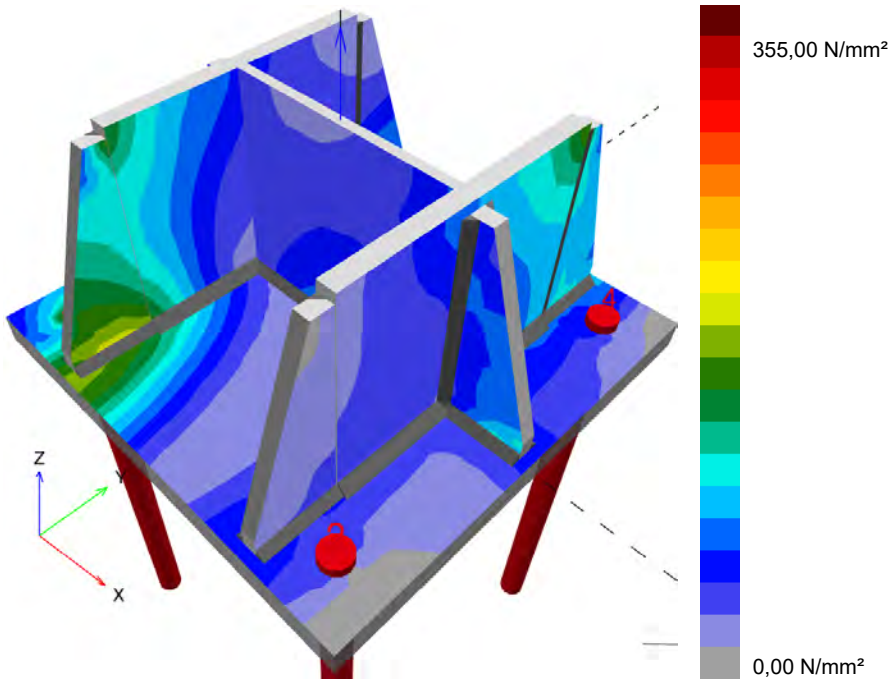


Vhodne podatke in rezultate je potrebno preveriti glede skladnosti z obstoječimi pogoji in verodostojnosti!
PROFIS Engineering ( c ) 2003-2025 Hilti AG, FL-9494 Schaan Hilti je registrirana blagovna znamka Hilti AG, Schaan

| | | | |
|---|---|---|---|
| Podjetje: | RAZPON d.o.o. | Stran: | 12 |
| Naslov: | Tehnološki park 20, 1000 Ljubljana | Projektant: | Igor Gorup |
| Telefon I Faks: | +38616203366 \| | E-mail: | igor.gorup@razpon.si |
| Projektiranje: | Beton - 13. Juni 2025 | Datum: | 25.06.2025 |
| Točka pritrjevanja: | Sidranje S4 | | |


### 2.4.1.2 Napetost na meji plastičnosti

Spodnji rezultati so prikazani za merodajno obtežno kombinacijo: 2 - Kombination 2

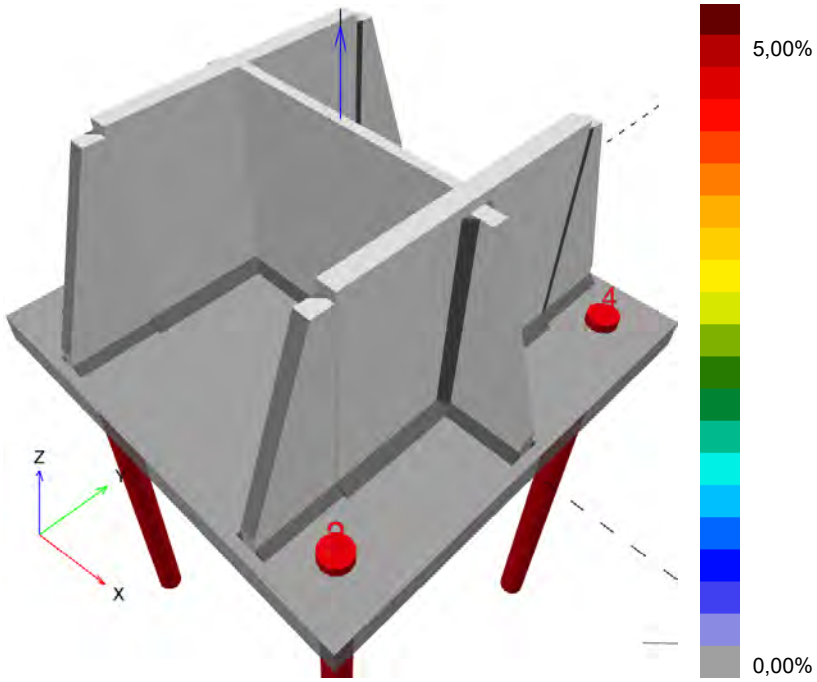


### 2.4.2 Nosilnost pločevine na bočni pritisk v območju luknje

Merodajna obtežna kombinacija: 2 - Kombination 2

Nosilnost pločevine na bočni pritisk, EN1993-1 - 8 točka 3.6.1:

**Enačbe**

$$F_{b,Rd} = \frac{k_1 \, a_b \, f_u \, d \, t}{\gamma_{M2}}$$

$$\text{Izkoriščenost} = \frac{V_{Ed}}{F_{b,Rd}}$$

**Spremenljivke**

| | $k_1$ | $a_b$ | $f_u$ [N/mm²] | d [mm] | t [mm] | $\gamma_{M2}$ |
|---|---|---|---|---|---|---|
| Sidro 1 | 2,50 | 1,00 | 490,00 | 30,0 | 30,0 | 1.25 |
| Sidro 2 | 2,50 | 0,55 | 490,00 | 30,0 | 30,0 | 1.25 |
| Sidro 3 | 2,50 | 0,98 | 490,00 | 30,0 | 30,0 | 1.25 |
| Sidro 4 | 2,50 | 0,51 | 490,00 | 30,0 | 30,0 | 1.25 |

**Rezultati**

| | $V_{Ed}$ [kN] | $F_{b,Rd}$ [kN] | Izkoriščenost [%] | Status |
|---|---|---|---|---|
| Sidro 1 | 4,764 | 882,000 | 1 | OK |
| Sidro 2 | 5,361 | 486,410 | 2 | OK |
| Sidro 3 | 5,673 | 861,955 | 1 | OK |
| Sidro 4 | 4,964 | 452,253 | 2 | OK |

Vhodne podatke in rezultate je potrebno preveriti glede skladnosti z obstoječimi pogoji in verodostojnosti!
PROFIS Engineering ( c ) 2003-2025 Hilti AG, FL-9494 Schaan Hilti je registrirana blagovna znamka Hilti AG, Schaan

| | | | |
|---|---|---|---|
| Podjetje: | RAZPON d.o.o. | Stran: | 13 |
| Naslov: | Tehnološki park 20, 1000 Ljubljana | Projektant: | Igor Gorup |
| Telefon I Faks: | +38616203366 \| | E-mail: | igor.gorup@razpon.si |
| Projektiranje: | Beton - 13. Juni 2025 | Datum: | 25.06.2025 |
| Točka pritrjevanja: | Sidranje S4 | | |

### 2.5 Zvari

Profili so modelirani brez upoštevanja kotnega radija. Posebna pravila varjenja (kot naprimer: hladno valjani profili...) niso upoštevana v programu.

#### 2.5.1 Ležiščna pločevina na profil

Merodajna obtežna kombinacija: 2 - Kombination 2

Izračun zvarov, EN1993-1-8 točka 4.5.3.2

Minimalna debelina zvara na stojini ($a_{min}$): 5,0 mm

Minimalna debelina zvara na pasnici ($a_{min}$): 5,0 mm

**Enačbe**

$$\sigma_{w,Ed} = (\sigma_{\perp}^2 + 3\,(\tau_{\perp}^2 + \tau_{||}^2))^{0.5}$$

$$\sigma_{w,Rd} = \frac{f_u}{\beta_w\,\gamma_{M2}}$$

$$\sigma_{\perp,Rd} = 0.9\frac{f_u}{\gamma_{M2}}$$

$$\text{Izkoriščenost} = \max\left(\frac{\sigma_{w,Ed}}{\sigma_{w,Rd}};\frac{|\sigma_{\perp}|}{\sigma_{\perp,Rd}}\right)$$

**Spremenljivke**

| Zvar | $\beta_w$ | $f_u$ [N/mm²] | $\gamma_{M2}$ |
|---|---|---|---|
| Stojina | 0,90 | 490,00 | 1,25 |
| Pasnica | 0,90 | 490,00 | 1,25 |

| Rob | a [mm] | L [mm] | $\varepsilon_{Pl}$ [%] | $\sigma_{\perp}$ [N/mm²] | $\tau_{||}$ [N/mm²] | $\tau_{\perp}$ [N/mm²] |
|---|---|---|---|---|---|---|
| Member 1-bfl 1 | ◢8,0◣ | 260,0 | 0,00 | −39,29 | 1,67 | −44,19 |
| Member 1-bfl | ◢8,0◣ | 260,0 | 0,00 | −51,78 | 25,40 | 46,88 |
| Member 1-tfl 1 | ◢8,0◣ | 260,0 | 0,00 | 59,48 | −84,36 | 44,15 |
| Member 1-tfl | ◢8,0◣ | 260,0 | 0,00 | 17,41 | −23,05 | −32,78 |
| Member 1-w 1 | ◢6,0◣ | 242,5 | 0,00 | −11,33 | 35,07 | −12,93 |
| Member 1-w | ◢6,0◣ | 242,5 | 0,00 | −10,19 | −42,61 | 9,03 |

**Rezultati**

| Rob | $\sigma_{w,Ed}$ [N/mm²] | $\sigma_{w,Rd}$ [N/mm²] | $\sigma_{\perp,Rd}$ [N/mm²] | Izkoriščenost [%] | Izkoriščenost$_c$ [%] | Status |
|---|---|---|---|---|---|---|
| Member 1-bfl 1 | 86,08 | 435,56 | 352,80 | 20 | 13 | OK |
| Member 1-bfl | 105,87 | 435,56 | 352,80 | 25 | 16 | OK |
| Member 1-tfl 1 | 175,31 | 435,56 | 352,80 | 41 | 21 | OK |
| Member 1-tfl | 71,55 | 435,56 | 352,80 | 17 | 9 | OK |
| Member 1-w 1 | 65,73 | 435,56 | 352,80 | 16 | 12 | OK |
| Member 1-w | 76,13 | 435,56 | 352,80 | 18 | 14 | OK |

#### 2.5.2 Jeklena toga ojačitev na profil/ležiščno pločevino

Merodajna obtežna kombinacija: 2 - Kombination 2

Izračun zvarov, EN1993-1-8 točka 4.5.3.2

Minimalna debelina zvara jeklene toge ojačitve na pasnico profila ($a_{min}$): 3,7 mm

Minimalna debelina zvara jeklene toge ojačitve na ležiščno pločevino ($a_{min}$): 5,0 mm

Vhodne podatke in rezultate je potrebno preveriti glede skladnosti z obstoječimi pogoji in verodostojnosti!
PROFIS Engineering ( c ) 2003-2025 Hilti AG, FL-9494 Schaan Hilti je registrirana blagovna znamka Hilti AG, Schaan

| | | | |
|---|---|---|---|
| Podjetje: | RAZPON d.o.o. | Stran: | 14 |
| Naslov: | Tehnološki park 20, 1000 Ljubljana | Projektant: | Igor Gorup |
| Telefon I Faks: | +38616203366 \| | E-mail: | igor.gorup@razpon.si |
| Projektiranje: | Beton - 13. Juni 2025 | Datum: | 25.06.2025 |
| Točka pritrjevanja: | Sidranje S4 | | |

**Enačbe**

$$\sigma_{w,Ed} = (\sigma_{\perp}^2 + 3(\tau_{\perp}^2 + \tau_{||}^2))^{0.5}$$

$$\sigma_{w,Rd} = \frac{f_u}{\beta_w \gamma_{M2}}$$

$$\sigma_{\perp,Rd} = 0.9\frac{f_u}{\gamma_{M2}}$$

$$\text{Izkoriščenost} = \max\left(\frac{\sigma_{w,Ed}}{\sigma_{w,Rd}}; \frac{|\sigma_{\perp}|}{\sigma_{\perp,Rd}}\right)$$

**Spremenljivke**

| $\beta_w$ | $f_u$ [N/mm²] | $\gamma_{M2}$ |
|---|---|---|
| 0,90 | 490,00 | 1,25 |

| Rob | a [mm] | L [mm] | $\varepsilon_{Pl}$ [%] | $\sigma_{\perp}$ [N/mm²] | $\tau_{\|\|}$ [N/mm²] | $\tau_{\perp}$ [N/mm²] |
|---|---|---|---|---|---|---|
| Stiffenera | ◢6,0◣ | 80,0 | 0,00 | −32,36 | 28,37 | −36,21 |
| Stiffenera 1 | ◢6,0◣ | 80,0 | 0,00 | −38,72 | −16,43 | 34,87 |
| Stiffenerb | ◢6,0◣ | 80,0 | 0,00 | −92,81 | 40,35 | −90,00 |
| Stiffenerb 1 | ◢6,0◣ | 80,0 | 0,00 | −72,27 | −40,24 | 80,41 |
| Stiffenerc | ◢6,0◣ | 80,0 | 0,00 | 115,86 | −130,51 | 116,07 |
| Stiffenerc 1 | ◢6,0◣ | 80,0 | 0,00 | 66,64 | 7,43 | −112,74 |
| Stiffenerd | ◢6,0◣ | 80,0 | 0,00 | 29,51 | −3,45 | 56,80 |
| Stiffenerd 1 | ◢6,0◣ | 80,0 | 0,00 | 59,60 | 83,59 | −60,06 |
| Stiffenere (Anchor plate) | ◢6,0◣ | 80,0 | 0,00 | 38,49 | −26,95 | 53,31 |
| Stiffenere (Anchor plate) 1 | ◢6,0◣ | 80,0 | 0,00 | 63,24 | 45,96 | −48,37 |
| Stiffenerf (Anchor plate) | ◢6,0◣ | 80,0 | 0,00 | −81,10 | 59,74 | −90,22 |
| Stiffenerf (Anchor plate) 1 | ◢6,0◣ | 80,0 | 0,00 | −96,03 | −71,70 | 86,85 |
| Stiffenere (Member 1-tfl 1) | ◢6,0◣ | 200,0 | 0,00 | 21,13 | 55,53 | 18,89 |
| Stiffenere (Member 1-tfl 1) 1 | ◢6,0◣ | 200,0 | 0,00 | 18,59 | −53,38 | −20,84 |
| Stiffenerf (Member 1-bfl 1) | ◢6,0◣ | 200,0 | 0,00 | −29,24 | −80,96 | −28,12 |
| Stiffenerf (Member 1-bfl 1) 1 | ◢6,0◣ | 200,0 | 0,00 | −28,38 | 80,71 | 29,48 |

**Rezultati**

| Rob | $\sigma_{w,Ed}$ [N/mm²] | $\sigma_{w,Rd}$ [N/mm²] | $\sigma_{\perp,Rd}$ [N/mm²] | Izkoriščenost [%] | Izkoriščenost$_c$ [%] | Status |
|---|---|---|---|---|---|---|
| Stiffenera | 86,00 | 435,56 | 352,80 | 20 | 15 | OK |
| Stiffenera 1 | 77,18 | 435,56 | 352,80 | 18 | 14 | OK |
| Stiffenerb | 194,41 | 435,56 | 352,80 | 45 | 40 | OK |
| Stiffenerb 1 | 171,70 | 435,56 | 352,80 | 40 | 35 | OK |
| Stiffenerc | 323,94 | 435,56 | 352,80 | 75 | 66 | OK |
| Stiffenerc 1 | 206,73 | 435,56 | 352,80 | 48 | 41 | OK |
| Stiffenerd | 102,89 | 435,56 | 352,80 | 24 | 20 | OK |
| Stiffenerd 1 | 187,97 | 435,56 | 352,80 | 44 | 37 | OK |
| Stiffenere (Anchor plate) | 110,39 | 435,56 | 352,80 | 26 | 13 | OK |

Vhodne podatke in rezultate je potrebno preveriti glede skladnosti z obstoječimi pogoji in verodostojnosti!
PROFIS Engineering ( c ) 2003-2025 Hilti AG, FL-9494 Schaan Hilti je registrirana blagovna znamka Hilti AG, Schaan

| | | | |
|---|---|---|---|
| Podjetje: | RAZPON d.o.o. | Stran: | 15 |
| Naslov: | Tehnološki park 20, 1000 Ljubljana | Projektant: | Igor Gorup |
| Telefon I Faks: | +38616203366 \| | E-mail: | igor.gorup@razpon.si |
| Projektiranje: | Beton - 13. Juni 2025 | Datum: | 25.06.2025 |
| Točka pritrjevanja: | Sidranje S4 | | |

| Rob | $\sigma_{w,Ed}$ [N/mm²] | $\sigma_{w,Rd}$ [N/mm²] | $\sigma_{\perp,Rd}$ [N/mm²] | Izkoriščenost [%] | Izkoriščenost$_c$ [%] | Status |
|---|---|---|---|---|---|---|
| Stiffenere (Anchor plate) 1 | 131,74 | 435,56 | 352,80 | 31 | 18 | OK |
| Stiffenerf (Anchor plate) | 204,21 | 435,56 | 352,80 | 47 | 27 | OK |
| Stiffenerf (Anchor plate) 1 | 217,43 | 435,56 | 352,80 | 50 | 31 | OK |
| Stiffenere (Member 1-tfl 1) | 103,77 | 435,56 | 352,80 | 24 | 8 | OK |
| Stiffenere (Member 1-tfl 1) 1 | 100,98 | 435,56 | 352,80 | 24 | 6 | OK |
| Stiffenerf (Member 1-bfl 1) | 151,30 | 435,56 | 352,80 | 35 | 14 | OK |
| Stiffenerf (Member 1-bfl 1) 1 | 151,51 | 435,56 | 352,80 | 35 | 13 | OK |

### 2.6 Beton

Merodajna obtežna kombinacija: 2 - Kombination 2

V skladu s standardom EN1992-1-1 točka 6.7(4), mora biti beton dovolj armiran za prevzem nateznih sil, ki jih povzroči pritrjeni element. Programska oprema PROFIS Engineering ne zajema določitve potrebne armature v betonu.

#### 2.6.1 Pritisk na beton pod ležiščno pločevino

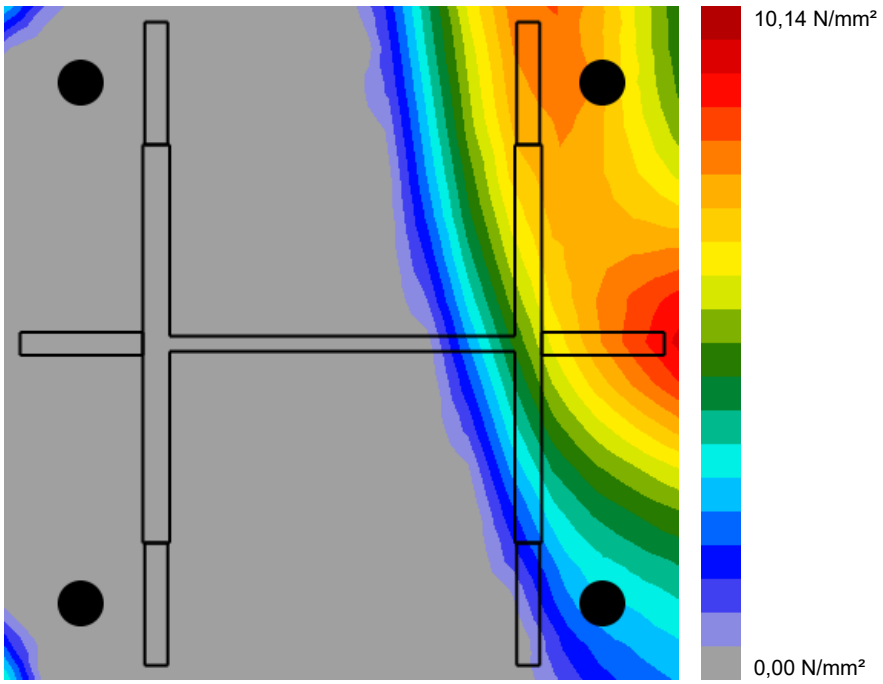


#### 2.6.2 Kontrola tlačnih napetosti v betonu pod ležiščno pločevino okoli profila po EN1992-1 točka 6.7 in EN1993-1-8, točka 6.2.5

Vhodne podatke in rezultate je potrebno preveriti glede skladnosti z obstoječimi pogoji in verodostojnosti!
PROFIS Engineering ( c ) 2003-2025 Hilti AG, FL-9494 Schaan Hilti je registrirana blagovna znamka Hilti AG, Schaan

| | | | |
|---|---|---|---|
| Podjetje: | RAZPON d.o.o. | Stran: | 16 |
| Naslov: | Tehnološki park 20, 1000 Ljubljana | Projektant: | Igor Gorup |
| Telefon I Faks: | +38616203366 \| | E-mail: | igor.gorup@razpon.si |
| Projektiranje: | Beton - 13. Juni 2025 | Datum: | 25.06.2025 |
| Točka pritrjevanja: | Sidranje S4 | | |

**Enačbe**

$$f_{jd} = \frac{\beta_j \, k_j \, \alpha_{cc} \, f_{ck}}{\gamma_c}$$

$$\sigma = \frac{N}{A_{eff}}$$

$$\text{Izkoriščenost} = \frac{\sigma}{f_{jd}}$$

**Spremenljivke**

| N [kN] | $A_{eff}$ [mm²] | $\beta_j$ | $k_j$ | $\alpha_{cc}$ | $f_{ck}$ [N/mm²] | $\gamma_c$ |
|---|---|---|---|---|---|---|
| 339,934 | 53.707 | 0,67 | 3,00 | 0,85 | 25,00 | 1,50 |

**Rezultati**

| $\sigma$ [N/mm²] | $f_{jd}$ [N/mm²] | Izkoriščenost [%] | Status |
|---|---|---|---|
| 6,33 | 28,48 | 23 | OK |

**2.7 Pomen simbolov**

| | |
|---|---|
| a | Debelina zvara |
| $a_b$ | Faktor |
| $\alpha_{cc}$ | Dolgotrajne posledice na maksimalno trdnost betona |
| $A_{eff}$ | Efektivna površina |
| $a_{min}$ | Minimalna debelina zvara |
| $\beta_j$ | Koeficient spoja $\beta_j$ |
| $\beta_w$ | Korelacijski faktor EN 1993-1-8 tab. 4.1 |
| d | Nominalni premer vijaka |
| $\varepsilon_{lim}$ | Mejna plastična deformacija |
| $\varepsilon_{Pl}$ | Plastična deformacija po CBFEM |
| $F_{b,Rd}$ | Odpornost ležiščne pločevine EN 1993-1-8 tab. 3.4 |
| $f_{ck}$ | Karakteristična tlačna trdnost betona |
| $f_{jd}$ | Mejna odpornost betonske kocke |
| $f_u$ | Mejna odpornost |
| $f_y$ | Meja tečenja |
| $\gamma_c$ | Faktor uporabe - SP 16, Tabela 41 |
| $\gamma_{M0}$ | Varnostni faktor jekla gamma M0 |
| $\gamma_{M2}$ | Varnostni faktor jekla gamma M2 |
| $k_1$ | Faktor oddaljenosti od roba in razmak med vijaki pravokotno na smer prenosa obremenitve - EN 1993-1-8 - Tabela 3.4 |
| $k_j$ | Faktor koncentracije |
| L | Dolžina zvara |
| N | Rezultanta tlačne sile |
| $\sigma$ | Povprečna napetost v betonu |
| $\sigma_\perp$ | Pravokotne napetosti |
| $\sigma_{\perp,Rd}$ | Odpornost na pravokotne napetosti |
| $\sigma_{Ed}$ | Nadomestna napetost |
| $\sigma_{w,Ed}$ | Nadomestna napetost |
| $\sigma_{w,Rd}$ | Odpornost nadomestne napetosti |
| t | Debelina ležiščne pločevine |
| $\tau_\perp$ | Strižna napetost pravokotno na os zvara |
| $\tau_{\parallel}$ | Strižna napetost pravokotno na os zvara |
| Izkoriščenost$_c$ | Izkoriščenost zvarov |
| $V_{Ed}$ | Strižna sila na sidro |

Vhodne podatke in rezultate je potrebno preveriti glede skladnosti z obstoječimi pogoji in verodostojnosti!
PROFIS Engineering ( c ) 2003-2025 Hilti AG, FL-9494 Schaan Hilti je registrirana blagovna znamka Hilti AG, Schaan

| | | | |
|---|---|---|---|
| Podjetje: | RAZPON d.o.o. | Stran: | 17 |
| Naslov: | Tehnološki park 20, 1000 Ljubljana | Projektant: | Igor Gorup |
| Telefon I Faks: | +38616203366 \| | E-mail: | igor.gorup@razpon.si |
| Projektiranje: | Beton - 13. Juni 2025 | Datum: | 25.06.2025 |
| Točka pritrjevanja: | Sidranje S4 | | |

### 2.8 Opozorila

- Z uporabo funkcionalnosti podajne ležiščne pločevine programa PROFIS Engineering ste mogoče izven okvirov standarda in vaša specificirana ležiščna pločevina se ne bo obnašala togo. Prosimo vas, da preverite rezultate s kompetentnim odgovornim projektantom za zagotovitev primernosti in ustreznosti za vaše specifične pristojnosti in projektne zahteve.
- Sidro je modelirano z upoštevanjem togosti določene iz grafov obremenitev-deformacija, na podlagi testov v neodvisnih laboratorijih. Upoštevajte, da enostavna zamenjava sidra ni mogoča, saj togost sidra močno vpliva na rezultate porazdelitve obtežbe.

Vhodne podatke in rezultate je potrebno preveriti glede skladnosti z obstoječimi pogoji in verodostojnosti!
PROFIS Engineering ( c ) 2003-2025 Hilti AG, FL-9494 Schaan Hilti je registrirana blagovna znamka Hilti AG, Schaan

| | | | |
|---|---|---|---|
| Podjetje: | RAZPON d.o.o. | Stran: | 18 |
| Naslov: | Tehnološki park 20, 1000 Ljubljana | Projektant: | Igor Gorup |
| Telefon I Faks: | +38616203366 \| | E-mail: | igor.gorup@razpon.si |
| Projektiranje: | Beton - 13. Juni 2025 | Datum: | 25.06.2025 |
| Točka pritrjevanja: | Sidranje S4 | | |

## 3 Povzetek rezultatov

Izračun ležiščne pločevine, sider, zvarov in ostalih elementov je zasnovan po metodi CBFEM (metoda končnih elementov z upoštevanjem posameznih komponent) in regulativ iz Evrokoda.

| | Obtežna kombinacija | Maks. izkoriščenost | Status |
|---|---|---|---|
| Sidra | Kombination 2 | 68% | OK |
| Ležiščna pločevina | Kombination 2 | 55% | OK |
| Zvari | Kombination 2 | 75% | OK |
| Toge ojačitve | Kombination 2 | 62% | OK |
| Beton | Kombination 2 | 23% | OK |
| Profil | Kombination 2 | 50% | OK |

**Izbrano pritrjevanje ustreza projektnim pogojem!**

Vhodne podatke in rezultate je potrebno preveriti glede skladnosti z obstoječimi pogoji in verodostojnosti!
PROFIS Engineering ( c ) 2003-2025 Hilti AG, FL-9494 Schaan Hilti je registrirana blagovna znamka Hilti AG, Schaan

| | | | |
|---|---|---|---|
| Podjetje: | RAZPON d.o.o. | Stran: | 19 |
| Naslov: | Tehnološki park 20, 1000 Ljubljana | Projektant: | Igor Gorup |
| Telefon I Faks: | +38616203366 \| | E-mail: | igor.gorup@razpon.si |
| Projektiranje: | Beton - 13. Juni 2025 | Datum: | 25.06.2025 |
| Točka pritrjevanja: | Sidranje S4 | | |

## 4 Opombe; Vaše dolžnosti sodelovanja

- Vse informacije in podatki, ki jih vsebuje programska oprema, se nanašajo izključno na uporabo izdelkov Hilti in temeljijo na načelih, formulah in varnostnih predpisih v skladu s tehničnimi navodili podjetja Hilti ter navodili za uporabo, montažo in montažo itd. ki jih mora uporabnik dosledno upoštevati. Vse vsebovane vrednosti so povprečne številke, zato je treba pred uporabo ustreznega izdelka Hilti opraviti preskuse, specifične za uporabo. Rezultati izračunov s programsko opremo v osnovi temeljijo na podatkih, ki jih vnesete. Zato prevzemate vso odgovornost za odsotnost napak, popolnost in ustreznost podatkov, ki jih morate vnesti. Poleg tega prevzemate vso odgovornost za to, da rezultate izračunov pregleda in popravi strokovnjak, zlasti glede skladnosti z veljavnimi normativi in dovoljenji, preden jih uporabite za svoj specifični objekt. Programska oprema služi le kot pomoč pri razlagi norm in dovoljenj brez kakršnega koli jamstva o odsotnosti napak, pravilnosti in ustreznosti rezultatov ali primernosti za določeno aplikacijo.
- Za preprečevanje ali omejitev škode, ki jo povzroča programska oprema, morate sprejeti vse potrebne in razumne ukrepe. Zlasti morate poskrbeti za redno varnostno kopiranje izračunov in podatkov ter po potrebi redno posodabljati programsko opremo, ki jo ponuja Hilti. Če ne uporabljate funkcije AutoUpdate programske opreme, morate z uporabo ročnih posodobitev prek spletnega mesta Hilti zagotoviti, da uporabljate trenutno in posodobljeno različico programske opreme. Hilti ne bo odgovoren za posledice, kot so obnovitev izgubljenih ali poškodovanih podatkov ali programov, ki so posledica krivdne kršitve dolžnosti.

Vhodne podatke in rezultate je potrebno preveriti glede skladnosti z obstoječimi pogoji in verodostojnosti!
PROFIS Engineering ( c ) 2003-2025 Hilti AG, FL-9494 Schaan Hilti je registrirana blagovna znamka Hilti AG, Schaan

| | | | |
|---|---|---|---|
| Podjetje: | RAZPON d.o.o. | Stran: | 1 |
| Naslov: | Tehnološki park 20, 1000 Ljubljana | Projektant: | Igor Gorup |
| Telefon I Faks: | +38616203366 \| | E-mail: | igor.gorup@razpon.si |
| Projektiranje: | Beton - 13. Juni 2025 (1) | Datum: | 25.06.2025 |
| Točka pritrjevanja: | Sidranje S5 | | |

**Komentar projektanta:**

# 1 Izračun detajla sidranja

## 1.1 Vhodni podatki

| | |
|---|---|
| **Tip in velikost sidra:** | **HIT-RE 500 V4 + HAS Meter 8.8 M30** |
| Povratna doba (življenjska doba v letih): | 50 |
| Številka artikla: | 2390172 HAS 8.8 M30x1000 (element) / 2287557 HIT-RE 500 V4 (kemično sidro) |
| Specification text: | Hilti AM 8.8 Gewindestange with HIT-RE 500 V4 Injektionssystem with 600 mm embedment hef, M30, Stahl galvanisiert, Hammerbohren installation per ETA 20/0541, |
| Efektivna sidrna globina: | $h_{ef,act}$ = 600,0 mm ($h_{ef,limit}$ = - mm) |
| Material: | 8.8 |
| Tehnična ocena artikla: | ETA 20/0541 |
| Izdano I Veljavno: | 09.06.2023 \| - |
| Kontrola: | Projektna metoda EN 1992-4, Kemično sidro |
| Vgradnja z nadvišanjem: | $e_b$ = 0,0 mm (brez nadvišanja); t = 30,0 mm |
| Ležišča pločevina[CBFEM]: | $l_x$ x $l_y$ x t = 220,0 mm x 280,0 mm x 30,0 mm; |
| Profil: | IPBi/HEA, IPBI 200 / HE 200 A; (L x W x T x FT) = 190,0 mm x 200,0 mm x 6,5 mm x 10,0 mm |
| Osnovni material: | razpokan beton, C25/30, $f_{c,cyl}$ = 25,00 N/mm$^2$; h =1.000,0 mm, Temp. kratko./dolgo.: 40/24 °C, delni varnostni faktor materiala $\gamma_c$ = 1,500 |
| **Vgradnja:** | **Hammer drilled hole, Pogoji vgradnje: Suho** |
| Ojačitev: | brez armature ali razmak med armaturo >= 150 mm (any Ø) or >= 100 mm (Ø <= 10 mm) |
| | z vzdolžno armaturo po robu betona d >= 12,0 [mm] + gosta mreža (armatura, obešala) s <= 100,0 [mm] |
| | Prisotna je armatura za kontrolo cepitve betona v skladu s standardom EN 1992-4, 7.2.1.7 (2) b) 2) |

[CBFEM] - Izračun sider temelji na metodi končnih elementov z upoštevanjem posameznih komponent (CBFEM)

**Geometrija [mm] & Obtežba [kN, kNm]**

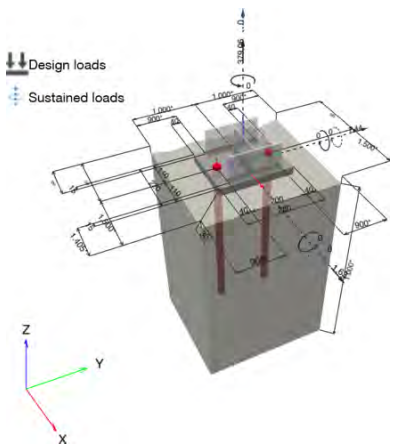


Vhodne podatke in rezultate je potrebno preveriti glede skladnosti z obstoječimi pogoji in verodostojnosti!
PROFIS Engineering ( c ) 2003-2025 Hilti AG, FL-9494 Schaan Hilti je registrirana blagovna znamka Hilti AG, Schaan

| | | | |
|---|---|---|---|
| Podjetje: | RAZPON d.o.o. | Stran: | 2 |
| Naslov: | Tehnološki park 20, 1000 Ljubljana | Projektant: | Igor Gorup |
| Telefon I Faks: | +38616203366 \| | E-mail: | igor.gorup@razpon.si |
| Projektiranje: | Beton - 13. Juni 2025 (1) | Datum: | 25.06.2025 |
| Točka pritrjevanja: | Sidranje S5 | | |

### 1.1.1 Obtežna kombinacija

| Primer | Opis | Sile [kN] / Momenti [kNm] | Potresno | požar | Izkoriščenost [%] |
|---|---|---|---|---|---|
| 1 | Kombination 1 | N = 379,060; $V_x$ = 1,630; $V_y$ = 1,440; $M_x$ = 0,000; $M_y$ = 0,000; $M_z$ = 0,000; $N_{sus}$ = 0,000; $M_{x,sus}$ = 0,000; $M_{y,sus}$ = 0,000; | ne | ne | 91 |

### 1.2 Obtežni primer/Rezultante sil v sidru

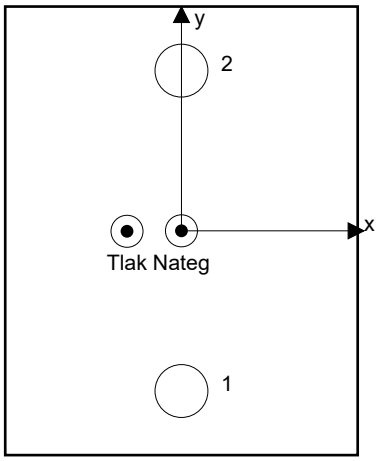


**Reakcije v sidru [kN]**
Natezna sila: (+Nateg, -Tlak)

| Sidro | Natezna sila | Strižna sila | Strižna sila x | Strižna sila y |
|---|---|---|---|---|
| 1 | 189,537 | 2,028 | 0,815 | 1,857 |
| 2 | 189,543 | 0,916 | 0,815 | −0,417 |

Resulting tension force in (x/y)=(0,0/0,0): 379,081 [kN]
Resulting compression force in (x/y)=(−34,0/−0,3): 0,578 [kN]

Sile v sidru so izračunane po metodi končnih elementov z upoštevanjem posameznih komponent (CBFEM)

Vhodne podatke in rezultate je potrebno preveriti glede skladnosti z obstoječimi pogoji in verodostojnosti!
PROFIS Engineering ( c ) 2003-2025 Hilti AG, FL-9494 Schaan Hilti je registrirana blagovna znamka Hilti AG, Schaan

| | | | |
|---|---|---|---|
| Podjetje: | RAZPON d.o.o. | Stran: | 3 |
| Naslov: | Tehnološki park 20, 1000 Ljubljana | Projektant: | Igor Gorup |
| Telefon I Faks: | +38616203366 \| | E-mail: | igor.gorup@razpon.si |
| Projektiranje: | Beton - 13. Juni 2025 (1) | Datum: | 25.06.2025 |
| Točka pritrjevanja: | Sidranje S5 | | |


### 1.3 Natezna obremenitev (EN 1992-4, Točka 7.2.1)

| | Obtežba [kN] | Kapaciteta [kN] | Izkoriščenost $\beta_N$ [%] | Status |
|---|---|---|---|---|
| Nosilnost jekla* | 189,543 | 299,200 | 64 | OK |
| Kombinacija izvleka sidra in betonskega konusa** | 379,081 | 423,915 | 90 | OK |
| Porušitev po konusu betona** | 379,081 | 419,134 | 91 | OK |
| Cepitev betona** | N/A | N/A | N/A | N/A |

*najbolj obremenjeno sidro **skupina sider (natezno obremenjena sidra)

#### 1.3.1 Nosilnost jekla

$$N_{Ed} \leq N_{Rd,s} = \frac{N_{Rk,s}}{\gamma_{Ms}}$$ EN 1992-4, Tabela 7.1

| $N_{Rk,s}$ [kN] | $\gamma_{Ms}$ | $N_{Rd,s}$ [kN] | $N_{Ed}$ [kN] |
|---|---|---|---|
| 448,800 | 1,500 | 299,200 | 189,543 |

Vhodne podatke in rezultate je potrebno preveriti glede skladnosti z obstoječimi pogoji in verodostojnosti!
PROFIS Engineering ( c ) 2003-2025 Hilti AG, FL-9494 Schaan Hilti je registrirana blagovna znamka Hilti AG, Schaan

| | | | |
|---|---|---|---|
| Podjetje: | RAZPON d.o.o. | Stran: | 4 |
| Naslov: | Tehnološki park 20, 1000 Ljubljana | Projektant: | Igor Gorup |
| Telefon I Faks: | +38616203366 \| | E-mail: | igor.gorup@razpon.si |
| Projektiranje: | Beton - 13. Juni 2025 (1) | Datum: | 25.06.2025 |
| Točka pritrjevanja: | Sidranje S5 | | |


### 1.3.2 Kombinacija izvleka sidra in betonskega konusa

$N_{Ed} \le N_{Rd,p} = \frac{N_{Rk,p}}{\gamma_{Mp}}$ — EN 1992-4, Tabela 7.1

$N_{Rk,p} = N^0_{Rk,p} \cdot \frac{A_{p,N}}{A^0_{p,N}} \cdot \psi_{g,Np} \cdot \psi_{s,Np} \cdot \psi_{re,Np} \cdot \psi_{ec1,Np} \cdot \psi_{ec2,Np}$ — EN 1992-4, Enačba (7.13)

$N^0_{Rk,p} = \psi_{sus} \cdot \tau_{Rk} \cdot \pi \cdot d \cdot h_{ef}$ — EN 1992-4, Enačba (7.14)

$\psi_{sus} = 1$ — EN 1992-4, Enačba (7.14a)

$s_{cr,Np} = 7{,}3 \cdot d \cdot \sqrt{\psi_{sus} \cdot \tau_{Rk}} \le 3 \cdot h_{ef}$ — EN 1992-4, Enačba (7.15)

$\psi_{g,Np} = \psi^0_{g,Np} - \left(\frac{s}{s_{cr,Np}}\right)^{0,5} \cdot \left(\psi^0_{g,Np} - 1\right) \ge 1{,}00$ — EN 1992-4, Enačba (7.17)

$\psi^0_{g,Np} = \sqrt{n} - (\sqrt{n} - 1) \cdot \left(\frac{\tau_{Rk}}{\tau_{Rk,c}}\right)^{1,5} \ge 1{,}00$ — EN 1992-4, Enačba (7.18)

$\tau_{Rk,c} = \frac{k_3}{\pi \cdot d} \cdot \sqrt{h_{ef} \cdot f_{ck}}$ — EN 1992-4, Enačba (7.19)

$\psi_{s,Np} = 0{,}7 + 0{,}3 \cdot \frac{c}{c_{cr,Np}} \le 1{,}00$ — EN 1992-4, Enačba (7.20)

$\psi_{ec1,Np} = \frac{1}{1 + \left(\frac{2 \cdot e_{c1,N}}{s_{cr,Np}}\right)} \le 1{,}00$ — EN 1992-4, Enačba (7.21)

$\psi_{ec2,Np} = \frac{1}{1 + \left(\frac{2 \cdot e_{c2,N}}{s_{cr,Np}}\right)} \le 1{,}00$ — EN 1992-4, Enačba (7.21)

| $A_{p,N}$ [mm²] | $A^0_{p,N}$ [mm²] | $\tau_{Rk,ucr,20}$ [N/mm²] | $s_{cr,Np}$ [mm] | $c_{cr,Np}$ [mm] | $c_{min}$ [mm] | $f_{c,cyl}$ [N/mm²] |
|---|---|---|---|---|---|---|
| 835.339 | 671.454 | 14,00 | 819,4 | 409,7 | 900,0 | 25,00 |

| $\psi_c$ | $\tau_{Rk,cr}$ [N/mm²] | $k_3$ | $\tau_{Rk,c}$ [N/mm²] | $\psi^0_{g,Np}$ | $\psi_{g,Np}$ |
|---|---|---|---|---|---|
| 1,023 | 8,69 | 7,700 | 10,01 | 1,079 | 1,040 |

| $e_{c1,N}$ [mm] | $\psi_{ec1,Np}$ | $e_{c2,N}$ [mm] | $\psi_{ec2,Np}$ | $\psi_{s,Np}$ | $\psi_{re,Np}$ |
|---|---|---|---|---|---|
| 0,0 | 1,000 | 0,0 | 1,000 | 1,000 | 1,000 |

| $\psi^0_{sus}$ | $\alpha_{sus}$ | $\psi_{sus}$ |
|---|---|---|
| 0,880 | 0,000 | 1,000 |

| $N^0_{Rk,p}$ [kN] | $N_{Rk,p}$ [kN] | $\gamma_{Mp}$ | $N_{Rd,p}$ [kN] | $N_{Ed}$ [kN] |
|---|---|---|---|---|
| 491,510 | 635,873 | 1,500 | 423,915 | 379,081 |

| ID skupine sider |
|---|
| 1, 2 |

Vhodne podatke in rezultate je potrebno preveriti glede skladnosti z obstoječimi pogoji in verodostojnosti!
PROFIS Engineering ( c ) 2003-2025 Hilti AG, FL-9494 Schaan Hilti je registrirana blagovna znamka Hilti AG, Schaan

| | | | |
|---|---|---|---|
| Podjetje: | RAZPON d.o.o. | Stran: | 5 |
| Naslov: | Tehnološki park 20, 1000 Ljubljana | Projektant: | Igor Gorup |
| Telefon I Faks: | +38616203366 \| | E-mail: | igor.gorup@razpon.si |
| Projektiranje: | Beton - 13. Juni 2025 (1) | Datum: | 25.06.2025 |
| Točka pritrjevanja: | Sidranje S5 | | |

### 1.3.3 Porušitev po konusu betona

$N_{Ed} \le N_{Rd,c} = \frac{N_{Rk,c}}{\gamma_{Mc}}$ EN 1992-4, Tabela 7.1

$N_{Rk,c} = N^0_{Rk,c} \cdot \frac{A_{c,N}}{A^0_{c,N}} \cdot \psi_{s,N} \cdot \psi_{re,N} \cdot \psi_{ec1,N} \cdot \psi_{ec2,N} \cdot \psi_{M,N}$ EN 1992-4, Enačba (7.1)

$N^0_{Rk,c} = k_1 \cdot \sqrt{f_{ck}} \cdot h_{ef}^{1,5}$ EN 1992-4, Enačba (7.2)

$A^0_{c,N} = s_{cr,N} \cdot s_{cr,N}$ EN 1992-4, Enačba (7.3)

$\psi_{s,N} = 0,7 + 0,3 \cdot \frac{c}{c_{cr,N}} \le 1,00$ EN 1992-4, Enačba (7.4)

$\psi_{ec1,N} = \frac{1}{1 + \left(\frac{2 \cdot e_{N,1}}{s_{cr,N}}\right)} \le 1,00$ EN 1992-4, Enačba (7.6)

$\psi_{ec2,N} = \frac{1}{1 + \left(\frac{2 \cdot e_{N,2}}{s_{cr,N}}\right)} \le 1,00$ EN 1992-4, Enačba (7.6)

$\psi_{M,N} = 1$ EN 1992-4, Enačba (7.7)

| $A_{c,N}$ [mm²] | $A^0_{c,N}$ [mm²] | $c_{cr,N}$ [mm] | $s_{cr,N}$ [mm] | $f_{c,cyl}$ [N/mm²] |
|---|---|---|---|---|
| 3.600.000 | 3.240.000 | 900,0 | 1.800,0 | 25,00 |

| $e_{c1,N}$ [mm] | $\psi_{ec1,N}$ | $e_{c2,N}$ [mm] | $\psi_{ec2,N}$ | $\psi_{s,N}$ | $\psi_{re,N}$ | z [mm] |
|---|---|---|---|---|---|---|
| 0,0 | 1,000 | 0,0 | 1,000 | 1,000 | 1,000 | 34,0 |

| $\psi_{M,N}$ | $k_1$ | $N^0_{Rk,c}$ [kN] | $\gamma_{Mc}$ | $N_{Rd,c}$ [kN] | $N_{Ed}$ [kN] |
|---|---|---|---|---|---|
| 1,000 | 7,700 | 565,832 | 1,500 | 419,134 | 379,081 |

| ID skupine sider |
|---|
| 1, 2 |

Vhodne podatke in rezultate je potrebno preveriti glede skladnosti z obstoječimi pogoji in verodostojnosti!
PROFIS Engineering ( c ) 2003-2025 Hilti AG, FL-9494 Schaan Hilti je registrirana blagovna znamka Hilti AG, Schaan

| | | | |
|---|---|---|---|
| Podjetje: | RAZPON d.o.o. | Stran: | 6 |
| Naslov: | Tehnološki park 20, 1000 Ljubljana | Projektant: | Igor Gorup |
| Telefon I Faks: | +38616203366 \| | E-mail: | igor.gorup@razpon.si |
| Projektiranje: | Beton - 13. Juni 2025 (1) | Datum: | 25.06.2025 |
| Točka pritrjevanja: | Sidranje S5 | | |

### 1.4 Strižna obremenitev (EN 1992-4, Točka 7.2.2)

| | Obtežba [kN] | Kapaciteta [kN] | Izkoriščenost $\beta_V$ [%] | Status |
|---|---|---|---|---|
| Nosilnost jekla (brez nadvišanja)* | 2,028 | 179,520 | 2 | OK |
| Porušitev po jeklu (z nadvišanjem)* | N/A | N/A | N/A | N/A |
| Nosilnost na iztrga betona** | 2,175 | 838,270 | 1 | OK |
| Porušitev po robu betona v smeri x+** | 2,798 | 307,130 | 1 | OK |

*najbolj obremenjeno sidro **skupina sider (relevantna sidra)
When the input edge distance is set to "infinity", edge breakout verification is not performed in that direction

#### 1.4.1 Nosilnost jekla (brez nadvišanja)

$V_{Ed} \leq V_{Rd,s} = \frac{V_{Rk,s}}{\gamma_{Ms}}$ EN 1992-4, Tabela 7.2

$V_{Rk,s} = k_7 \cdot V^0_{Rk,s}$ EN 1992-4, Enačba (7.35)

| $V^0_{Rk,s}$ [kN] | $k_7$ | $V_{Rk,s}$ [kN] | $\gamma_{Ms}$ | $V_{Rd,s}$ [kN] | $V_{Ed}$ [kN] |
|---|---|---|---|---|---|
| 224,400 | 1,000 | 224,400 | 1,250 | 179,520 | 2,028 |

#### 1.4.2 Nosilnost na iztrga betona (merodajna nosilnost betona)

$V_{Ed} \leq V_{Rd,cp} = \frac{V_{Rk,cp}}{\gamma_{Mc,p}}$ EN 1992-4, Tabela 7.2

$V_{Rk,cp} = k_8 \cdot \min\{N_{Rk,c}; N_{Rk,p}\}$ EN 1992-4, Enačba (7.39c)

$N_{Rk,c} = N^0_{Rk,c} \cdot \frac{A_{c,N}}{A^0_{c,N}} \cdot \psi_{s,N} \cdot \psi_{re,N} \cdot \psi_{ec1,N} \cdot \psi_{ec2,N} \cdot \psi_{M,N}$ EN 1992-4, Enačba (7.1)

$N^0_{Rk,c} = k_1 \cdot \sqrt{f_{ck}} \cdot h_{ef}^{1,5}$ EN 1992-4, Enačba (7.2)

$A^0_{c,N} = s_{cr,N} \cdot s_{cr,N}$ EN 1992-4, Enačba (7.3)

$\psi_{s,N} = 0,7 + 0,3 \cdot \frac{c}{c_{cr,N}} \leq 1,00$ EN 1992-4, Enačba (7.4)

$\psi_{ec1,N} = \frac{1}{1 + \left(\frac{2 \cdot e_{V,1}}{s_{cr,N}}\right)} \leq 1,00$ EN 1992-4, Enačba (7.6)

$\psi_{ec2,N} = \frac{1}{1 + \left(\frac{2 \cdot e_{V,2}}{s_{cr,N}}\right)} \leq 1,00$ EN 1992-4, Enačba (7.6)

$\psi_{M,N} = 1$ EN 1992-4, Enačba (7.7)

| $A_{c,N}$ [mm²] | $A^0_{c,N}$ [mm²] | $c_{cr,N}$ [mm] | $s_{cr,N}$ [mm] | $k_8$ | $f_{c,cyl}$ [N/mm²] |
|---|---|---|---|---|---|
| 3.600.000 | 3.240.000 | 900,0 | 1.800,0 | 2,000 | 25,00 |

| $e_{c1,V}$ [mm] | $\psi_{ec1,N}$ | $e_{c2,V}$ [mm] | $\psi_{ec2,N}$ | $\psi_{s,N}$ | $\psi_{re,N}$ | $\psi_{M,N}$ |
|---|---|---|---|---|---|---|
| 0,0 | 1,000 | 0,0 | 1,000 | 1,000 | 1,000 | 1,000 |

| $k_1$ | $N^0_{Rk,c}$ [kN] | $\gamma_{Mc,p}$ | $V_{Rd,cp}$ [kN] | $V_{Ed}$ [kN] |
|---|---|---|---|---|
| 7,700 | 565,832 | 1,500 | 838,270 | 2,175 |

| ID skupine sider |
|---|
| 1, 2 |

Vhodne podatke in rezultate je potrebno preveriti glede skladnosti z obstoječimi pogoji in verodostojnosti!
PROFIS Engineering ( c ) 2003-2025 Hilti AG, FL-9494 Schaan Hilti je registrirana blagovna znamka Hilti AG, Schaan

| | | | |
|---|---|---|---|
| Podjetje: | RAZPON d.o.o. | Stran: | 7 |
| Naslov: | Tehnološki park 20, 1000 Ljubljana | Projektant: | Igor Gorup |
| Telefon I Faks: | +38616203366 \| | E-mail: | igor.gorup@razpon.si |
| Projektiranje: | Beton - 13. Juni 2025 (1) | Datum: | 25.06.2025 |
| Točka pritrjevanja: | Sidranje S5 | | |

### 1.4.3 Porušitev po robu betona v smeri x+

$$V_{Ed} \le V_{Rd,c} = \frac{V_{Rk,c}}{\gamma_{Mc}}$$ EN 1992-4, Tabela 7.2

$$V_{Rk,c} = k_T \cdot V^0_{Rk,c} \cdot \frac{A_{c,V}}{A^0_{c,V}} \cdot \psi_{s,V} \cdot \psi_{h,V} \cdot \psi_{\alpha,V} \cdot \psi_{ec,V} \cdot \psi_{re,V}$$ EN 1992-4, Enačba (7.40)

$$V^0_{Rk,c} = k_9 \cdot d_{nom}^{\alpha} \cdot l_f^{\beta} \cdot \sqrt{f_{ck}} \cdot c_1^{1,5}$$ EN 1992-4, Enačba (7.41)

$$\alpha = 0,1 \cdot \left(\frac{l_f}{c_1}\right)^{0,5}$$ EN 1992-4, Enačba (7.42)

$$\beta = 0,1 \cdot \left(\frac{d_{nom}}{c_1}\right)^{0,2}$$ EN 1992-4, Enačba (7.43)

$$A^0_{c,V} = 4,5 \cdot c_1^2$$ EN 1992-4, Enačba (7.44)

$$\psi_{s,V} = 0,7 + 0,3 \cdot \frac{c_2}{1,5 \cdot c_1} \le 1,00$$ EN 1992-4, Enačba (7.45)

$$\psi_{h,V} = \left(\frac{1,5 \cdot c_1}{h}\right)^{0,5} \ge 1,00$$ EN 1992-4, Enačba (7.46)

$$\psi_{ec,V} = \frac{1}{1 + \left(\frac{2 \cdot e_V}{3 \cdot c_1}\right)} \le 1,00$$ EN 1992-4, Enačba (7.47)

$$\psi_{\alpha,V} = \sqrt{\frac{1}{(\cos \alpha_V)^2 + (0,5 \cdot \sin \alpha_V)^2}} \ge 1,00$$ EN 1992-4, Enačba (7.48)

$$c_1' = \max\left(\frac{c_{2,max}}{1,5}; \frac{h}{1,5}; \frac{s_{2,max}}{3}\right)$$ EN 1992-4, Enačba (7.50))

| $l_f$ [mm] | $d_{nom}$ [mm] | $k_9$ | $\alpha$ | $\beta$ | $f_{c,cyl}$ [N/mm²] | $c_1$ [mm] |
|---|---|---|---|---|---|---|
| 240,0 | 30,00 | 1,700 | 0,060 | 0,054 | 25,00 | 1.500,0 |

| $c_1'$ [mm] | $A_{c,V}$ [mm²] | $A^0_{c,V}$ [mm²] | $\psi_{s,V}$ | $\psi_{h,V}$ | $e_{c,V}$ [mm] | $\psi_{ec,V}$ |
|---|---|---|---|---|---|---|
| 666,7 | 2.000.000 | 2.000.000 | 0,970 | 1,000 | 0,0 | 1,000 |

| $\alpha_V$ [°] | $\psi_{\alpha,V}$ | $\psi_{re,V}$ |
|---|---|---|
| 54,38 | 1,408 | 1,400 |

| $V^0_{Rk,c}$ [kN] | $k_T$ | $\gamma_{Mc}$ | $V_{Rd,c}$ [kN] | $V_{Ed}$ [kN] |
|---|---|---|---|---|
| 240,948 | 1,0 | 1,500 | 307,130 | 2,798 |

| ID skupine sider |
|---|
| 1, 2 |

When the input edge distance is set to "infinity", edge breakout verification is not performed in that direction

Vhodne podatke in rezultate je potrebno preveriti glede skladnosti z obstoječimi pogoji in verodostojnosti!
PROFIS Engineering ( c ) 2003-2025 Hilti AG, FL-9494 Schaan Hilti je registrirana blagovna znamka Hilti AG, Schaan

| | | | |
|---|---|---|---|
| Podjetje: | RAZPON d.o.o. | Stran: | 8 |
| Naslov: | Tehnološki park 20, 1000 Ljubljana | Projektant: | Igor Gorup |
| Telefon I Faks: | +38616203366 \| | E-mail: | igor.gorup@razpon.si |
| Projektiranje: | Beton - 13. Juni 2025 (1) | Datum: | 25.06.2025 |
| Točka pritrjevanja: | Sidranje S5 | | |

### 1.5 Kombinacija nateznih in strižnih obremenitev (EN 1992-4-4, del 7.2.3)

Porušitev jekla

| $\beta_N$ | $\beta_V$ | $\alpha$ | Izkoriščenost $\beta_{N,V}$ [%] | Status |
|---|---|---|---|---|
| 0,633 | 0,011 | 2,000 | 41 | OK |

$\beta_N^{\alpha} + \beta_V^{\alpha} \leq 1{,}0$

Porušitev betona

| $\beta_N$ | $\beta_V$ | $\alpha$ | Izkoriščenost $\beta_{N,V}$ [%] | Status |
|---|---|---|---|---|
| 0,904 | 0,009 | 1,000 | 77 | OK |

$(\beta_N + \beta_V) / 1.2 \leq 1{,}0$

### 1.6 Opozorila

- Projektne metode v programski opremi PROFIS Engineering zahtevajo uporabo absolutno toge ležiščne pločevine v skladu z regulativami (ETAG 001/Annex C, EOTA TR029, itd.). To pomeni, da se porazdelitev obremenitve na sidra zaradi elastičnih deformacij sidrne plošče ne upošteva - predpostavlja se, da je ležiščna pločevina toga, da se ne deformira, v primeru delovanja projektne obtežbe. PROFIS Engineering izračuna najmanjšo potrebno debelino ležiščne pločevine s CBFEM metodo za omejitev napetosti v ležiščni pločevini na podlagi zgornjih predpostavk. PROFIS Engineering ne dokazuje, da je predpostavka o togi ležiščni pločevini pravilna. Vhodne podatke in rezultate je potrebno preveriti, da so v skladu z obstoječimi pogoji in verodostojnosti!
- The equations presented in this report are based on metric units. When inputs are displayed in imperial units, the user should be aware that the equations remain in their metric format.
- Potrebno je opraviti kontrolo prenosa obtežbe v osnovni material po EN 1992-4, Dodatek A!
- Izračun je veljaven samo v primeru, če luknja v ležiščni pločevini ni večja od vrednosti podane v Tabeli 6.1 of EN 1992-4!! Za večje premere izvrtin glej točko 6.2.2 of EN 1992-4!
- Seznam dodatne opreme v tem poročilu je samo za informacije uporabnika. V vsakem primeru je potrebno upoštevati navodila za uporabo, ki so priložena izdelku, da zagotovite pravilno vgradnjo.
- For the determination of the $\psi_{re,v}$ (concrete edge failure) the minimum concrete cover defined in the design settings is used as the concrete cover of the edge reinforcement.
- Karakteristična sprijena trdnost je odvisna od kratkotrajnih in dolgotrajnih temperaturnih obremenitev.
- Armiranje roba betona ni potrebno, da se izognemo cepitvi betona
- Load transfer from supplementary reinforcement to the structural member shall be verified by the responsible structural engineer.
- With supplementary reinforcement and post-installed anchors, please ensure that in the jobsite the rebars are not drilled through.
- Metode projektiranja v programu PROFIS Engineering zahtevajo upoštevanje toge ležiščne pločevine, skladno z veljavnimi predpisi (ETAG 001/Dodatek C, EOTA TR029, itd.). To pomeni, da je ležiščna pločevina absolutno toga in prepreči prerazporeditev obtežbe na sidra zaradi elastičnih/plastičnih pomikov. Uporabnik sprejme, da se ležiščna pločevina po inženirski presoji upošteva kot skoraj toga.
- Karakteristična sprijemna trdnost je odvisna od povratne dobe (servisna doba v letih): 50


PROFIS Engineering ( c ) 2003-2025 Hilti AG, FL-9494 Schaan Hilti je registrirana blagovna znamka Hilti AG, Schaan

| | | | |
|---|---|---|---|
| Podjetje: | RAZPON d.o.o. | Stran: | 9 |
| Naslov: | Tehnološki park 20, 1000 Ljubljana | Projektant: | Igor Gorup |
| Telefon I Faks: | +38616203366 \| | E-mail: | igor.gorup@razpon.si |
| Projektiranje: | Beton - 13. Juni 2025 (1) | Datum: | 25.06.2025 |
| Točka pritrjevanja: | Sidranje S5 | | |

### 1.7 Podatki za vgradnjo

Ležišćna pločevina, jeklo: S 355; E = 210.000,00 N/mm$^2$; $f_{yk}$ = 355,00 N/mm$^2$
Profil: IPBi/HEA, IPBI 200 / HE 200 A; (L x W x T x FT) = 190,0 mm x 200,0 mm x 6,5 mm x 10,0 mm
Premer luknje v ležišćni plošči: $d_f$ = 33,0 mm
Debelina ležišćne pločevine (vnos): 30,0 mm

Metoda vrtanja: Udarno vrtanje
Čiščenje: Potrebno je čiščenje izvrtine z uporabo stisnjenega zraka v skladu z navodili za uporabo.

Tip in velikost sidra: HIT-RE 500 V4 + HAS Meter 8.8 M30
Številka artikla: 2390172 HAS 8.8 M30x1000 (element) / 2287557 HIT-RE 500 V4 (kemično sidro)
Maximum installation torque: 300 Nm
Globina izvrtine v osnovnem materialu: 35,0 mm
Globina izvrtine v osnovnem materialu: 600,0 mm
Minimalna debelina osnovnega materiala: 670,0 mm

Hilti AM 8.8 threaded rod with HIT-RE 500 V4 injection mortar with 600 mm embedment hef, M30, Steel galvanized, Hammer drill bit installation per ETA 20/0541

### 1.7.1 Priporočeni dodatki

| Vrtanje | Čiščenje | Vgradnja |
|---|---|---|
| • Primerno vrtalno udarno kladivo<br>• Ustrezen sveder | • Zahtevano izpihovanje s komprimiranim zrakom in ustreznimi pripomočki, za izpihovanje prahu iz dna izvrtine.<br>• Okrogla jeklena ščetka ustreznega premera | • Dozirnik s kaseto in mešalcem<br>• Momentni ključ |

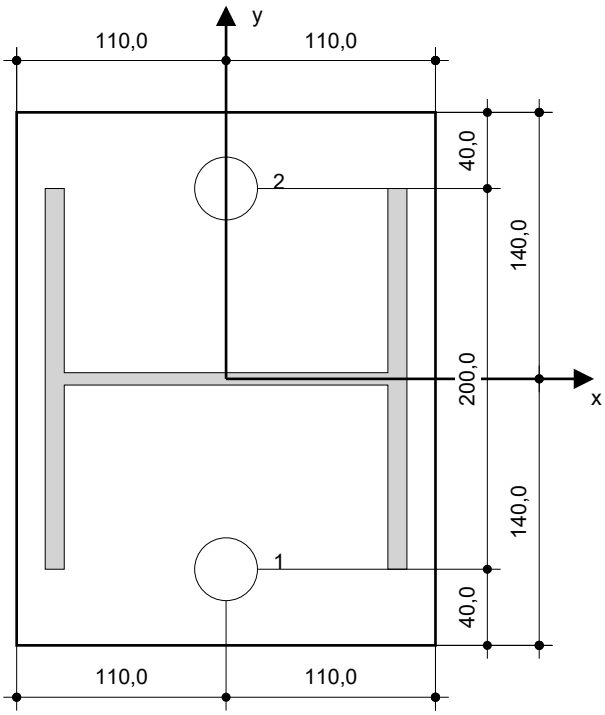


**Koordinate sidra [mm]**

| Sidro | x | y | $c_{-x}$ | $c_{+x}$ | $c_{-y}$ | $c_{+y}$ |
|---|---|---|---|---|---|---|
| 1 | 0,0 | −100,0 | - | 1.500,0 | 900,0 | 1.100,0 |
| 2 | 0,0 | 100,0 | - | 1.500,0 | 1.100,0 | 900,0 |

Vhodne podatke in rezultate je potrebno preveriti glede skladnosti z obstoječimi pogoji in verodostojnosti!
PROFIS Engineering ( c ) 2003-2025 Hilti AG, FL-9494 Schaan Hilti je registrirana blagovna znamka Hilti AG, Schaan

| | | | |
|---|---|---|---|
| Podjetje: | RAZPON d.o.o. | Stran: | 10 |
| Naslov: | Tehnološki park 20, 1000 Ljubljana | Projektant: | Igor Gorup |
| Telefon I Faks: | +38616203366 \| | E-mail: | igor.gorup@razpon.si |
| Projektiranje: | Beton - 13. Juni 2025 (1) | Datum: | 25.06.2025 |
| Točka pritrjevanja: | Sidranje S5 | | |

# 2 Izračun ležiščne pločevine

### 2.1 Vhodni podatki

| | |
|---|---|
| Ležiščna pločevina: | Oblika: Pravokotna<br>$l_x$ x $l_y$ x t = 220,0 mm x 280,0 mm x 30,0 mm<br>Izračun: FEM<br>Material: S 355; $F_y$ = 355,00 N/mm²; $\varepsilon_{lim}$ = 5,00% |
| Tip in velikost sidra: | HIT-RE 500 V4 + HAS Meter 8.8 M30, $h_{ef}$ = 600,0 mm |
| Togost sidra: | Sidro je modelirano z upoštevanjem togosti določene iz grafov obremenitev-deformacija, na podlagi testov v neodvisnih laboratorijih. Upoštevajte, da enostavna zamenjava sidra ni mogoča, saj togost sidra močno vpliva na rezultate porazdelitve obtežbe. |
| Projektna metoda: | EN-based design uporaba MKE z upoštevanjem posameznih komponent |
| Vgradnja z nadvišanjem: | $e_b$ = 0,0 mm (No stand-off); t = 30,0 mm |
| Profil: | IPBI 200 / HE 200 A; (L x W x T x FT) = 190,0 mm x 200,0 mm x 6,5 mm x 10,0 mm<br>Material: S 355; $F_y$ = 355,00 N/mm²; $\varepsilon_{lim}$ = 5,00%<br>Ekscentričnost x: 0,0 mm<br>Ekscentričnost y: 0,0 mm |
| Osnovni material: | Cracked concrete; C25/30; $f_{c,cyl}$ = 25,00 N/mm²; h = 1.000,0 mm; E = 31.000,00 N/mm²; G = 12.916,67 N/mm²; v = 0,20 |
| Zvari (profil na ležiščno pločevino): | Tip razporeditve: Plastičen<br>Material: S 355 |
| Velikost mreže: | Število elementov na robu: 8<br>Min. velikost elementa: 10,0 mm<br>Maks. velikost elementa: 50,0 mm |

### 2.2 Povzetek

| Opis | | Profil | | Ležiščna pločevina | | | Zvari [%] |
|---|---|---|---|---|---|---|---|
| | | $\sigma_{Ed}$ [N/mm²] | $\varepsilon_{Pl}$ [%] | $\sigma_{Ed}$ [N/mm²] | $\varepsilon_{Pl}$ [%] | Nosilnost pločevine na bočni pritisk v območju luknje [%] | |
| 1 | Kombination 1 | 277,92 | 0,03 | 355,10 | 0,05 | 1 | 69 |

### 2.3 Klasifikacija ležiščne pločevine

Spodnji rezultati so prikazani za merodajno obtežno kombinacijo: Kombination 1

| Natezne sile v sidru | Ekvivalentno toga ležiščna pločevina (FEM) | Projektiranje z upoštevanjem podajne ležiščne pločevine (FEM) |
|---|---|---|
| Sidro 1 | 189,531 kN | 189,537 kN |
| Sidro 2 | 189,535 kN | 189,543 kN |

Uporabnik je sprejel, da je obnašanje ležiščne pločevine 100 % togo, po svoji inženirski presoji.To pomeni, da so lahko uporabljene smernice za dimenzioniranje sider.

### 2.4 Profil/Toge ojačitve/Ležiščna pločevina

Profil in jeklene toge ojačitve so preverjene na ravni povezave jekla z betonom. Projektiranje detajla ne nadomesti projektiranja kritičnega jeklenega prereza, tovrstni izračun mora biti preverjen z drugim programom in ne PROFIS Engineering-om.

#### 2.4.1 Nadomestna napetost in plastična deformacija

Kriterij mejnega stanja po EN1993-1-5 Dodatek C.8, (1) 2.

**Rezultati**

| Del | Obtežna kombinacija | Material | $\sigma_{Ed}$ [N/mm²] | $\varepsilon_{Pl}$ [%] | $f_y$ [N/mm²] | $\gamma_{M0}$ | $f_y/\gamma_{M0}$ [N/mm²] | $\varepsilon_{lim}$ [%] | Status |
|---|---|---|---|---|---|---|---|---|---|
| Ležiščna pločevina | Kombination 1 | S 355 | 355,10 | 0,05 | 355,00 | 1,00 | 355,00 | 5,00 | OK |
| Profil | Kombination | S 355 | 277,92 | 0,03 | 355,00 | 1,00 | 355,00 | 5,00 | OK |

Vhodne podatke in rezultate je potrebno preveriti glede skladnosti z obstoječimi pogoji in verodostojnosti!
PROFIS Engineering ( c ) 2003-2025 Hilti AG, FL-9494 Schaan Hilti je registrirana blagovna znamka Hilti AG, Schaan

| | | | |
|---|---|---|---|
| Podjetje: | RAZPON d.o.o. | Stran: | 11 |
| Naslov: | Tehnološki park 20, 1000 Ljubljana | Projektant: | Igor Gorup |
| Telefon I Faks: | +38616203366 \| | E-mail: | igor.gorup@razpon.si |
| Projektiranje: | Beton - 13. Juni 2025 (1) | Datum: | 25.06.2025 |
| Točka pritrjevanja: | Sidranje S5 | | |

| Del | Obtežna kombinacija | Material | $\sigma_{Ed}$ [N/mm²] | $\varepsilon_{Pl}$ [%] | $f_y$ [N/mm²] | $\gamma_{M0}$ | $f_y/\gamma_{M0}$ [N/mm²] | $\varepsilon_{lim}$ [%] | Status |
|---|---|---|---|---|---|---|---|---|---|
| | 1 | | | | | | | | |
| Profil | Kombination 1 | S 355 | 277,40 | 0,03 | 355,00 | 1,00 | 355,00 | 5,00 | OK |
| Profil | Kombination 1 | S 355 | 241,11 | 0,00 | 355,00 | 1,00 | 355,00 | 5,00 | OK |

#### 2.4.1.1 Nadomestna napetost

Spodnji rezultati so prikazani za merodajno obtežno kombinacijo: 1 - Kombination 1

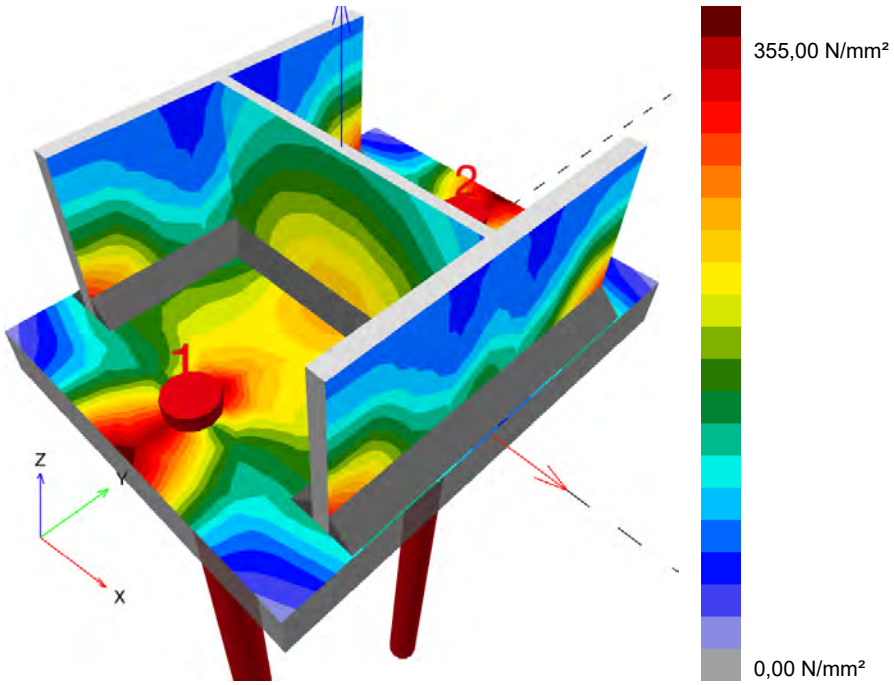



PROFIS Engineering ( c ) 2003-2025 Hilti AG, FL-9494 Schaan Hilti je registrirana blagovna znamka Hilti AG, Schaan

| | | | |
|---|---|---|---|
| Podjetje: | RAZPON d.o.o. | Stran: | 12 |
| Naslov: | Tehnološki park 20, 1000 Ljubljana | Projektant: | Igor Gorup |
| Telefon I Faks: | +38616203366 \| | E-mail: | igor.gorup@razpon.si |
| Projektiranje: | Beton - 13. Juni 2025 (1) | Datum: | 25.06.2025 |
| Točka pritrjevanja: | Sidranje S5 | | |

### 2.4.1.2 Napetost na meji plastičnosti

Spodnji rezultati so prikazani za merodajno obtežno kombinacijo: 1 - Kombination 1

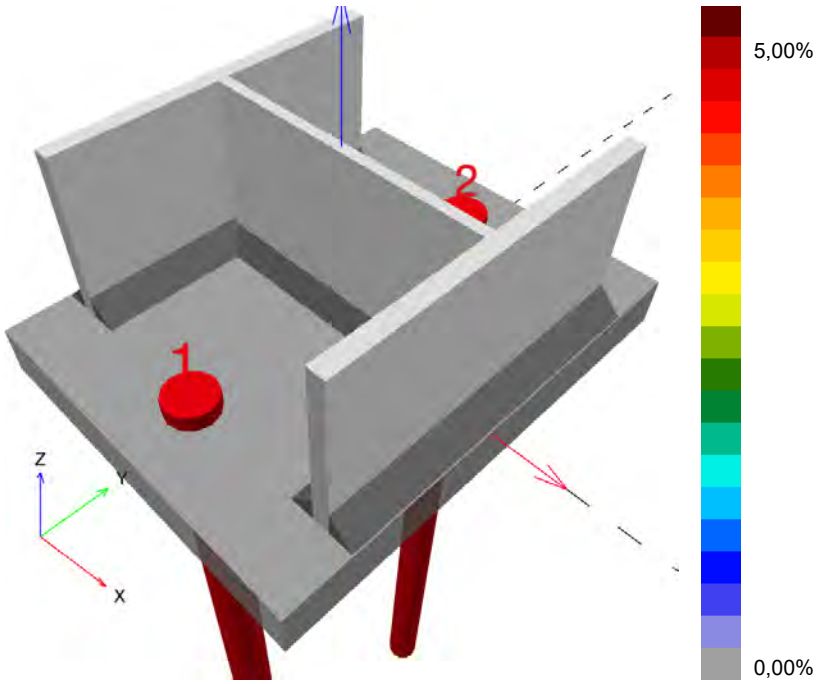


### 2.4.2 Nosilnost pločevine na bočni pritisk v območju luknje

Merodajna obtežna kombinacija: 1 - Kombination 1

Nosilnost pločevine na bočni pritisk, EN1993-1 - 8 točka 3.6.1:

**Enačbe**

$$F_{b,Rd} = \frac{k_1 \, a_b \, f_u \, d \, t}{\gamma_{M2}}$$

$$\text{Izkoriščenost} = \frac{V_{Ed}}{F_{b,Rd}}$$

**Spremenljivke**

| | $k_1$ | $a_b$ | $f_u$ [N/mm²] | d [mm] | t [mm] | $\gamma_{M2}$ |
|---|---|---|---|---|---|---|
| Sidro 1 | 2,50 | 0,44 | 490,00 | 30,0 | 30,0 | 1.25 |
| Sidro 2 | 2,11 | 0,89 | 490,00 | 30,0 | 30,0 | 1.25 |

**Rezultati**

| | $V_{Ed}$ [kN] | $F_{b,Rd}$ [kN] | Izkoriščenost [%] | Status |
|---|---|---|---|---|
| Sidro 1 | 2,028 | 389,162 | 1 | OK |
| Sidro 2 | 0,915 | 660,829 | 1 | OK |

### 2.5 Zvari

Profili so modelirani brez upoštevanja kotnega radija. Posebna pravila varjenja (kot naprimer: hladno valjani profili...) niso upoštevana v programu.

Vhodne podatke in rezultate je potrebno preveriti glede skladnosti z obstoječimi pogoji in verodostojnosti!
PROFIS Engineering ( c ) 2003-2025 Hilti AG, FL-9494 Schaan Hilti je registrirana blagovna znamka Hilti AG, Schaan

| | | | |
|---|---|---|---|
| Podjetje: | RAZPON d.o.o. | Stran: | 13 |
| Naslov: | Tehnološki park 20, 1000 Ljubljana | Projektant: | Igor Gorup |
| Telefon I Faks: | +38616203366 \| | E-mail: | igor.gorup@razpon.si |
| Projektiranje: | Beton - 13. Juni 2025 (1) | Datum: | 25.06.2025 |
| Točka pritrjevanja: | Sidranje S5 | | |

### 2.5.1 Ležiščna pločevina na profil

Merodajna obtežna kombinacija: 1 - Kombination 1

Izračun zvarov, EN1993-1-8 točka 4.5.3.2

Minimalna debelina zvara na stojini ($a_{min}$): 5,0 mm

Minimalna debelina zvara na pasnici ($a_{min}$): 5,0 mm

**Enačbe**

$$\sigma_{w,Ed} = (\sigma_{\perp}^2 + 3\,(\tau_{\perp}^2 + \tau_{||}^2))^{0.5}$$

$$\sigma_{w,Rd} = \frac{f_u}{\beta_w\,\gamma_{M2}}$$

$$\sigma_{\perp,Rd} = 0.9\frac{f_u}{\gamma_{M2}}$$

$$\text{Izkoriščenost} = \max\left(\frac{\sigma_{w,Ed}}{\sigma_{w,Rd}};\frac{|\sigma_{\perp}|}{\sigma_{\perp,Rd}}\right)$$

**Spremenljivke**

| Zvar | $\beta_w$ | $f_u$ [N/mm²] | $\gamma_{M2}$ |
|---|---|---|---|
| Stojina | 0,90 | 490,00 | 1,25 |
| Pasnica | 0,90 | 490,00 | 1,25 |

| Rob | a [mm] | L [mm] | $\varepsilon_{Pl}$ [%] | $\sigma_{\perp}$ [N/mm²] | $\tau_{||}$ [N/mm²] | $\tau_{\perp}$ [N/mm²] |
|---|---|---|---|---|---|---|
| Member 1-bfl 1 | ◢10,0◣ | 200,0 | 0,00 | 111,75 | −142,47 | 72,97 |
| Member 1-bfl | ◢10,0◣ | 200,0 | 0,00 | 71,61 | 81,09 | −110,40 |
| Member 1-tfl 1 | ◢10,0◣ | 200,0 | 0,00 | 71,76 | 81,46 | 110,31 |
| Member 1-tfl | ◢10,0◣ | 200,0 | 0,00 | 111,67 | 142,46 | −73,01 |
| Member 1-w 1 | ◢8,0◣ | 180,0 | 0,00 | 68,91 | −19,64 | 68,91 |
| Member 1-w | ◢8,0◣ | 180,0 | 0,00 | 68,92 | 19,61 | −68,92 |

**Rezultati**

| Rob | $\sigma_{w,Ed}$ [N/mm²] | $\sigma_{w,Rd}$ [N/mm²] | $\sigma_{\perp,Rd}$ [N/mm²] | Izkoriščenost [%] | Izkoriščenost$_c$ [%] | Status |
|---|---|---|---|---|---|---|
| Member 1-bfl 1 | 298,92 | 435,56 | 352,80 | 69 | 28 | OK |
| Member 1-bfl | 247,83 | 435,56 | 352,80 | 57 | 26 | OK |
| Member 1-tfl 1 | 248,12 | 435,56 | 352,80 | 57 | 26 | OK |
| Member 1-tfl | 298,91 | 435,56 | 352,80 | 69 | 28 | OK |
| Member 1-w 1 | 141,95 | 435,56 | 352,80 | 33 | 23 | OK |
| Member 1-w | 141,97 | 435,56 | 352,80 | 33 | 23 | OK |

### 2.6 Beton

Merodajna obtežna kombinacija: 1 - Kombination 1

V skladu s standardom EN1992-1-1 točka 6.7(4), mora biti beton dovolj armiran za prevzem nateznih sil, ki jih povzroči pritrjeni element. Programska oprema PROFIS Engineering ne zajema določitve potrebne armature v betonu.

Vhodne podatke in rezultate je potrebno preveriti glede skladnosti z obstoječimi pogoji in verodostojnosti!
PROFIS Engineering ( c ) 2003-2025 Hilti AG, FL-9494 Schaan Hilti je registrirana blagovna znamka Hilti AG, Schaan

| | | | |
|---|---|---|---|
| Podjetje: | RAZPON d.o.o. | Stran: | 14 |
| Naslov: | Tehnološki park 20, 1000 Ljubljana | Projektant: | Igor Gorup |
| Telefon I Faks: | +38616203366 \| | E-mail: | igor.gorup@razpon.si |
| Projektiranje: | Beton - 13. Juni 2025 (1) | Datum: | 25.06.2025 |
| Točka pritrjevanja: | Sidranje S5 | | |

### 2.6.1 Pritisk na beton pod ležiščno pločevino

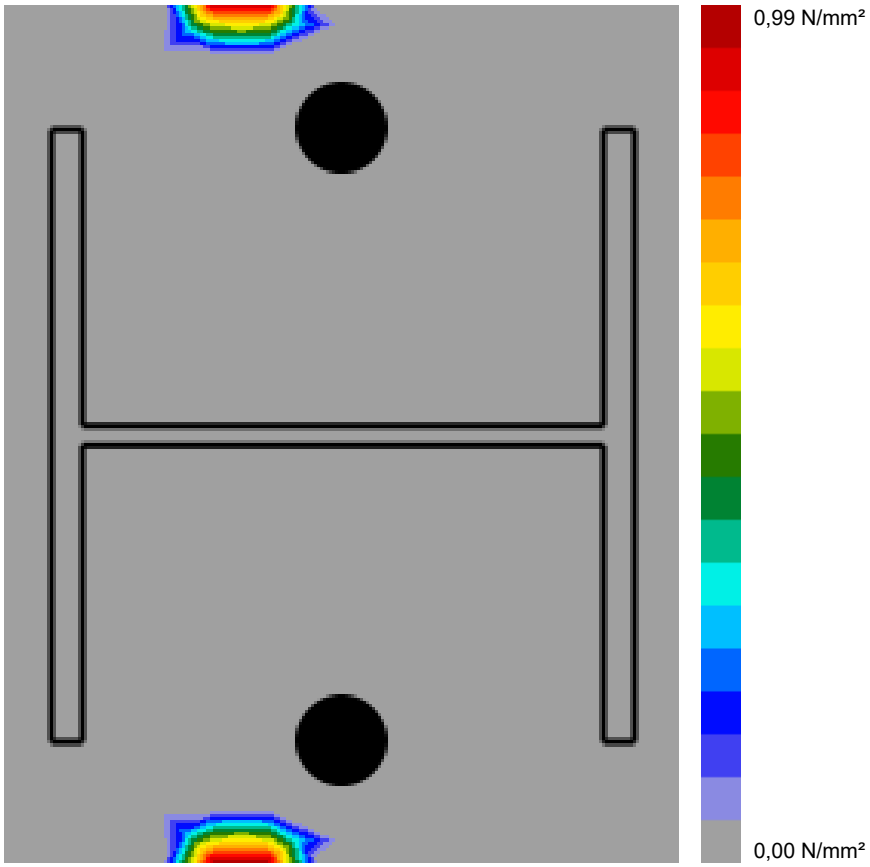


**2.6.2 Opomba: Kontrola tlačnih napetosti pod ležiščno pločevino po EN1993-1-8 točka 6.7 in EN1992-1 se ne izvaja v primeru, če ni tlačnih obremenitev apliciranih na ležiščno pločevino.**

Vhodne podatke in rezultate je potrebno preveriti glede skladnosti z obstoječimi pogoji in verodostojnosti!
PROFIS Engineering ( c ) 2003-2025 Hilti AG, FL-9494 Schaan Hilti je registrirana blagovna znamka Hilti AG, Schaan

| | | | |
|---|---|---|---|
| Podjetje: | RAZPON d.o.o. | Stran: | 15 |
| Naslov: | Tehnološki park 20, 1000 Ljubljana | Projektant: | Igor Gorup |
| Telefon I Faks: | +38616203366 \| | E-mail: | igor.gorup@razpon.si |
| Projektiranje: | Beton - 13. Juni 2025 (1) | Datum: | 25.06.2025 |
| Točka pritrjevanja: | Sidranje S5 | | |

### 2.7 Pomen simbolov

| | |
|---|---|
| a | Debelina zvara |
| $a_b$ | Faktor |
| $a_{min}$ | Minimalna debelina zvara |
| $\beta_w$ | Korelacijski faktor EN 1993-1-8 tab. 4.1 |
| d | Nominalni premer vijaka |
| $\varepsilon_{lim}$ | Mejna plastična deformacija |
| $\varepsilon_{Pl}$ | Plastična deformacija po CBFEM |
| $F_{b,Rd}$ | Odpornost ležiščne pločevine EN 1993-1-8 tab. 3.4 |
| $f_u$ | Mejna odpornost |
| $f_y$ | Meja tečenja |
| $\gamma_{M0}$ | Varnostni faktor jekla gamma M0 |
| $\gamma_{M2}$ | Varnostni faktor jekla gamma M2 |
| $k_1$ | Faktor oddaljenosti od roba in razmak med vijaki pravokotno na smer prenosa obremenitve - EN 1993-1-8 - Tabela 3.4 |
| L | Dolžina zvara |
| $\sigma_\perp$ | Pravokotne napetosti |
| $\sigma_{\perp,Rd}$ | Odpornost na pravokotne napetosti |
| $\sigma_{Ed}$ | Nadomestna napetost |
| $\sigma_{w,Ed}$ | Nadomestna napetost |
| $\sigma_{w,Rd}$ | Odpornost nadomestne napetosti |
| t | Debelina ležiščne pločevine |
| $\tau_\perp$ | Strižna napetost pravokotno na os zvara |
| $\tau_\parallel$ | Strižna napetost pravokotno na os zvara |
| $Izkoriščenost_c$ | Izkoriščenost zvarov |
| $V_{Ed}$ | Strižna sila na sidro |

### 2.8 Opozorila

- Z uporabo funkcionalnosti podajne ležiščne pločevine programa PROFIS Engineering ste mogoče izven okvirov standarda in vaša specificirana ležiščna pločevina se ne bo obnašala togo. Prosimo vas, da preverite rezultate s kompetentnim odgovornim projektantom za zagotovitev primernosti in ustreznosti za vaše specifične pristojnosti in projektne zahteve.
- Sidro je modelirano z upoštevanjem togosti določene iz grafov obremenitev-deformacija, na podlagi testov v neodvisnih laboratorijih. Upoštevajte, da enostavna zamenjava sidra ni mogoča, saj togost sidra močno vpliva na rezultate porazdelitve obtežbe.

Vhodne podatke in rezultate je potrebno preveriti glede skladnosti z obstoječimi pogoji in verodostojnosti!
PROFIS Engineering ( c ) 2003-2025 Hilti AG, FL-9494 Schaan Hilti je registrirana blagovna znamka Hilti AG, Schaan

| | | | |
|---|---|---|---|
| Podjetje: | RAZPON d.o.o. | Stran: | 16 |
| Naslov: | Tehnološki park 20, 1000 Ljubljana | Projektant: | Igor Gorup |
| Telefon I Faks: | +38616203366 \| | E-mail: | igor.gorup@razpon.si |
| Projektiranje: | Beton - 13. Juni 2025 (1) | Datum: | 25.06.2025 |
| Točka pritrjevanja: | Sidranje S5 | | |

## 3 Povzetek rezultatov

Izračun ležiščne pločevine, sider, zvarov in ostalih elementov je zasnovan po metodi CBFEM (metoda končnih elementov z upoštevanjem posameznih komponent) in regulativ iz Evrokoda.

| | Obtežna kombinacija | Maks. izkoriščenost | Status |
|---|---|---|---|
| Sidra | Kombination 1 | 91% | OK |
| Ležiščna pločevina | Kombination 1 | 100% | OK |
| Zvari | Kombination 1 | 69% | OK |
| Profil | Kombination 1 | 79% | OK |

**Izbrano pritrjevanje ustreza projektnim pogojem!**

Vhodne podatke in rezultate je potrebno preveriti glede skladnosti z obstoječimi pogoji in verodostojnosti!
PROFIS Engineering ( c ) 2003-2025 Hilti AG, FL-9494 Schaan Hilti je registrirana blagovna znamka Hilti AG, Schaan

| | | | |
|---|---|---|---|
| Podjetje: | RAZPON d.o.o. | Stran: | 17 |
| Naslov: | Tehnološki park 20, 1000 Ljubljana | Projektant: | Igor Gorup |
| Telefon I Faks: | +38616203366 \| | E-mail: | igor.gorup@razpon.si |
| Projektiranje: | Beton - 13. Juni 2025 (1) | Datum: | 25.06.2025 |
| Točka pritrjevanja: | Sidranje S5 | | |

## 4 Opombe; Vaše dolžnosti sodelovanja

- Vse informacije in podatki, ki jih vsebuje programska oprema, se nanašajo izključno na uporabo izdelkov Hilti in temeljijo na načelih, formulah in varnostnih predpisih v skladu s tehničnimi navodili podjetja Hilti ter navodili za uporabo, montažo in montažo itd. ki jih mora uporabnik dosledno upoštevati. Vse vsebovane vrednosti so povprečne številke, zato je treba pred uporabo ustreznega izdelka Hilti opraviti preskuse, specifične za uporabo. Rezultati izračunov s programsko opremo v osnovi temeljijo na podatkih, ki jih vnesete. Zato prevzemate vso odgovornost za odsotnost napak, popolnost in ustreznost podatkov, ki jih morate vnesti. Poleg tega prevzemate vso odgovornost za to, da rezultate izračunov pregleda in popravi strokovnjak, zlasti glede skladnosti z veljavnimi normativi in dovoljenji, preden jih uporabite za svoj specifični objekt. Programska oprema služi le kot pomoč pri razlagi norm in dovoljenj brez kakršnega koli jamstva o odsotnosti napak, pravilnosti in ustreznosti rezultatov ali primernosti za določeno aplikacijo.
- Za preprečevanje ali omejitev škode, ki jo povzroča programska oprema, morate sprejeti vse potrebne in razumne ukrepe. Zlasti morate poskrbeti za redno varnostno kopiranje izračunov in podatkov ter po potrebi redno posodabljati programsko opremo, ki jo ponuja Hilti. Če ne uporabljate funkcije AutoUpdate programske opreme, morate z uporabo ročnih posodobitev prek spletnega mesta Hilti zagotoviti, da uporabljate trenutno in posodobljeno različico programske opreme. Hilti ne bo odgovoren za posledice, kot so obnovitev izgubljenih ali poškodovanih podatkov ali programov, ki so posledica krivdne kršitve dolžnosti.

Vhodne podatke in rezultate je potrebno preveriti glede skladnosti z obstoječimi pogoji in verodostojnosti!
PROFIS Engineering ( c ) 2003-2025 Hilti AG, FL-9494 Schaan Hilti je registrirana blagovna znamka Hilti AG, Schaan

| | | | |
|---|---|---|---|
| Podjetje: | RAZPON d.o.o. | Stran: | 1 |
| Naslov: | Tehnološki park 20, 1000 Ljubljana | Projektant: | Igor Gorup |
| Telefon I Faks: | +38616203366 \| | E-mail: | igor.gorup@razpon.si |
| Projektiranje: | Beton - 13. Juni 2025 | Datum: | 13.06.2025 |
| Točka pritrjevanja: | Sidranje S6 | | |

**Komentar projektanta:**

# 1 Izračun detajla sidranja

## 1.1 Vhodni podatki

| | |
|---|---|
| **Tip in velikost sidra:** | **HUS4-H 14 h_nom1** |
| Povratna doba (življenjska doba v letih): | 50 |
| Številka artikla: | 2293569 HUS4-H 14x75 10/-/- |
| Specification text: | Hilti HUS Schraubanker with 65 mm embedment, 14 hnom1, Stahl galvanisiert, installation per ETA-20/0867, |
| Efektivna sidrna globina: | $h_{ef}$ = 49,3 mm ($h_{ef,ETA}$ = 49,3 mm), $h_{nom}$ = 65,0 mm |
| Material: | Carbon Steel |
| Tehnična ocena artikla: | ETA-20/0867 |
| Izdano I Veljavno: | 11.02.2025 \| - |
| Kontrola: | Projektna metoda EN 1992-4, Mehansko sidro |
| Vgradnja z nadvišanjem: | $e_b$ = 0,0 mm (brez nadvišanja); t = 10,0 mm |
| Ležišča pločevina[CBFEM]: | $l_x$ x $l_y$ x t = 94,3 mm x 180,0 mm x 10,0 mm; |
| Profil: | Square hollow, 80 x 80 x 4,0; (D x Š x V) = 80,0 mm x 80,0 mm x 4,0 mm |
| Osnovni material: | razpokan beton, C25/30, $f_{c,cyl}$ = 25,00 N/mm$^2$; h =150,0 mm, delni varnostni faktor materiala $\gamma_c$ = 1,500 |
| **Vgradnja:** | **Hammer drilled hole, Pogoji vgradnje: Suho** |
| Ojačitev: | brez armature ali razmak med armaturo >= 150 mm (any Ø) or >= 100 mm (Ø <= 10 mm)<br>brez vzdolžne armature po robu betona<br>Prisotna je armatura za kontrolo cepitve betona v skladu s standardom EN 1992-4, 7.2.1.7 (2) b) 2) |

[CBFEM] - Izračun sider temelji na metodi končnih elementov z upoštevanjem posameznih komponent (CBFEM)

**Geometrija [mm] & Obtežba [kN, kNm]**

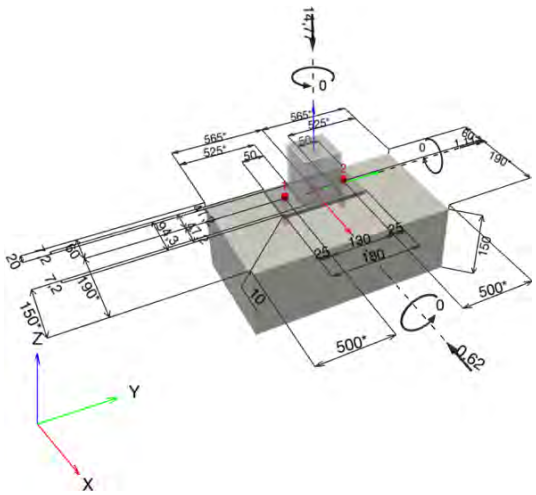



PROFIS Engineering ( c ) 2003-2025 Hilti AG, FL-9494 Schaan Hilti je registrirana blagovna znamka Hilti AG, Schaan

| | | | |
|---|---|---|---|
| Podjetje: | RAZPON d.o.o. | Stran: | 2 |
| Naslov: | Tehnološki park 20, 1000 Ljubljana | Projektant: | Igor Gorup |
| Telefon I Faks: | +38616203366 \| | E-mail: | igor.gorup@razpon.si |
| Projektiranje: | Beton - 13. Juni 2025 | Datum: | 13.06.2025 |
| Točka pritrjevanja: | Sidranje S6 | | |

### 1.1.1 Obtežna kombinacija

| Primer | Opis | Sile [kN] / Momenti [kNm] | Potresno | požar | Izkoriščenost [%] |
|---|---|---|---|---|---|
| 1 | Kombination 1 | N = −14,770; $V_x$ = −0,620; $V_y$ = 1,110; $M_x$ = 0,000; $M_y$ = 0,000; $M_z$ = 0,000; | ne | ne | 19 |

### 1.2 Obtežni primer/Rezultante sil v sidru

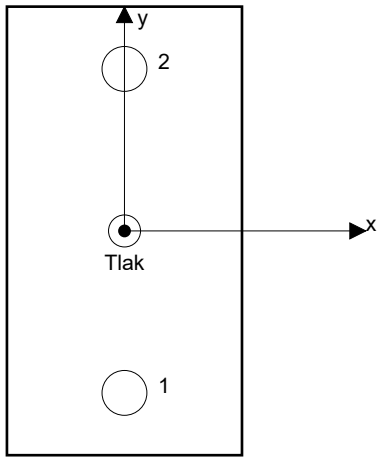


**Reakcije v sidru [kN]**
Natezna sila: (+Nateg, -Tlak)

| Sidro | Natezna sila | Strižna sila | Strižna sila x | Strižna sila y |
|---|---|---|---|---|
| 1 | 0,000 | 0,627 | −0,310 | 0,545 |
| 2 | 0,000 | 0,645 | −0,310 | 0,565 |

Resulting tension force in (x/y)=(-/-): 0,000 [kN]
Resulting compression force in (x/y)=(0,0/−0,0): 14,854 [kN]

Sile v sidru so izračunane po metodi končnih elementov z upoštevanjem posameznih komponent (CBFEM)

Vhodne podatke in rezultate je potrebno preveriti glede skladnosti z obstoječimi pogoji in verodostojnosti!
PROFIS Engineering ( c ) 2003-2025 Hilti AG, FL-9494 Schaan Hilti je registrirana blagovna znamka Hilti AG, Schaan

| | | | |
|---|---|---|---|
| Podjetje: | RAZPON d.o.o. | Stran: | 3 |
| Naslov: | Tehnološki park 20, 1000 Ljubljana | Projektant: | Igor Gorup |
| Telefon I Faks: | +38616203366 \| | E-mail: | igor.gorup@razpon.si |
| Projektiranje: | Beton - 13. Juni 2025 | Datum: | 13.06.2025 |
| Točka pritrjevanja: | Sidranje S6 | | |

### 1.3 Natezna obremenitev (EN 1992-4, Točka 7.2.1)

| | Obtežba [kN] | Kapaciteta [kN] | Izkoriščenost $\beta_N$ [%] | Status |
|---|---|---|---|---|
| Nosilnost jekla* | N/A | N/A | N/A | N/A |
| Porušitev po konusu betona** | N/A | N/A | N/A | N/A |
| Cepitev betona** | N/A | N/A | N/A | N/A |

*najbolj obremenjeno sidro **skupina sider (natezno obremenjena sidra)

Vhodne podatke in rezultate je potrebno preveriti glede skladnosti z obstoječimi pogoji in verodostojnosti!
PROFIS Engineering ( c ) 2003-2025 Hilti AG, FL-9494 Schaan Hilti je registrirana blagovna znamka Hilti AG, Schaan

| | | | |
|---|---|---|---|
| Podjetje: | RAZPON d.o.o. | Stran: | 4 |
| Naslov: | Tehnološki park 20, 1000 Ljubljana | Projektant: | Igor Gorup |
| Telefon I Faks: | +38616203366 \| | E-mail: | igor.gorup@razpon.si |
| Projektiranje: | Beton - 13. Juni 2025 | Datum: | 13.06.2025 |
| Točka pritrjevanja: | Sidranje S6 | | |

### 1.4 Strižna obremenitev (EN 1992-4, Točka 7.2.2)

| | Obtežba [kN] | Kapaciteta [kN] | Izkoriščenost $\beta_V$ [%] | Status |
|---|---|---|---|---|
| Nosilnost jekla (brez nadvišanja)* | 0,645 | 35,200 | 2 | OK |
| Porušitev po jeklu (z nadvišanjem)* | N/A | N/A | N/A | N/A |
| Nosilnost na iztrga betona** | 1,271 | 28,528 | 5 | OK |
| Porušitev po robu betona v smeri y+** | 1,152 | 6,099 | 19 | OK |

*najbolj obremenjeno sidro **skupina sider (relevantna sidra)

#### 1.4.1 Nosilnost jekla (brez nadvišanja)

$V_{Ed} \leq V_{Rd,s} = \frac{V_{Rk,s}}{\gamma_{Ms}}$ EN 1992-4, Tabela 7.2

$V_{Rk,s} = k_7 \cdot V^0_{Rk,s}$ EN 1992-4, Enačba (7.35)

| $V^0_{Rk,s}$ [kN] | $k_7$ | $V_{Rk,s}$ [kN] | $\gamma_{Ms}$ | $V_{Rd,s}$ [kN] | $V_{Ed}$ [kN] |
|---|---|---|---|---|---|
| 55,000 | 0,800 | 44,000 | 1,250 | 35,200 | 0,645 |

#### 1.4.2 Nosilnost na iztrga betona

$V_{Ed} \leq V_{Rd,cp} = \frac{V_{Rk,cp}}{\gamma_{Mc,p}}$ EN 1992-4, Tabela 7.2

$V_{Rk,cp} = k_8 \cdot N_{Rk,c}$ EN 1992-4, Enačba (7.39a)

$N_{Rk,c} = N^0_{Rk,c} \cdot \frac{A_{c,N}}{A^0_{c,N}} \cdot \psi_{s,N} \cdot \psi_{re,N} \cdot \psi_{ec1,N} \cdot \psi_{ec2,N} \cdot \psi_{M,N}$ EN 1992-4, Enačba (7.1)

$N^0_{Rk,c} = k_1 \cdot \sqrt{f_{ck}} \cdot h_{ef}^{1,5}$ EN 1992-4, Enačba (7.2)

$A^0_{c,N} = s_{cr,N} \cdot s_{cr,N}$ EN 1992-4, Enačba (7.3)

$\psi_{s,N} = 0,7 + 0,3 \cdot \frac{c}{c_{cr,N}} \leq 1,00$ EN 1992-4, Enačba (7.4)

$\psi_{ec1,N} = \frac{1}{1 + \left(\frac{2 \cdot e_{V,1}}{s_{cr,N}}\right)} \leq 1,00$ EN 1992-4, Enačba (7.6)

$\psi_{ec2,N} = \frac{1}{1 + \left(\frac{2 \cdot e_{V,2}}{s_{cr,N}}\right)} \leq 1,00$ EN 1992-4, Enačba (7.6)

$\psi_{M,N} = 1$ EN 1992-4, Enačba (7.7)

| $A_{c,N}$ [mm²] | $A^0_{c,N}$ [mm²] | $c_{cr,N}$ [mm] | $s_{cr,N}$ [mm] | $k_8$ | $f_{c,cyl}$ [N/mm²] |
|---|---|---|---|---|---|
| 37.225 | 21.874 | 73,9 | 147,9 | 2,000 | 25,00 |

| $e_{c1,V}$ [mm] | $\psi_{ec1,N}$ | $e_{c2,V}$ [mm] | $\psi_{ec2,N}$ | $\psi_{s,N}$ | $\psi_{re,N}$ | $\psi_{M,N}$ |
|---|---|---|---|---|---|---|
| 0,0 | 1,000 | 0,0 | 1,000 | 0,943 | 1,000 | 1,000 |

| $k_1$ | $N^0_{Rk,c}$ [kN] | $\gamma_{Mc,p}$ | $V_{Rd,cp}$ [kN] | $V_{Ed}$ [kN] |
|---|---|---|---|---|
| 7,700 | 13,327 | 1,500 | 28,528 | 1,271 |

| ID skupine sider |
|---|
| 1, 2 |

Vhodne podatke in rezultate je potrebno preveriti glede skladnosti z obstoječimi pogoji in verodostojnosti!
PROFIS Engineering ( c ) 2003-2025 Hilti AG, FL-9494 Schaan Hilti je registrirana blagovna znamka Hilti AG, Schaan

| | | | |
|---|---|---|---|
| Podjetje: | RAZPON d.o.o. | Stran: | 5 |
| Naslov: | Tehnološki park 20, 1000 Ljubljana | Projektant: | Igor Gorup |
| Telefon I Faks: | +38616203366 \| | E-mail: | igor.gorup@razpon.si |
| Projektiranje: | Beton - 13. Juni 2025 | Datum: | 13.06.2025 |
| Točka pritrjevanja: | Sidranje S6 | | |

### 1.4.3 Porušitev po robu betona v smeri y+

$$V_{Ed} \le V_{Rd,c} = \frac{V_{Rk,c}}{\gamma_{Mc}}$$ EN 1992-4, Tabela 7.2

$$V_{Rk,c} = k_T \cdot V^0_{Rk,c} \cdot \frac{A_{c,V}}{A^0_{c,V}} \cdot \psi_{s,V} \cdot \psi_{h,V} \cdot \psi_{\alpha,V} \cdot \psi_{ec,V} \cdot \psi_{re,V}$$ EN 1992-4, Enačba (7.40)

$$V^0_{Rk,c} = k_9 \cdot d_{nom}^{\alpha} \cdot l_f^{\beta} \cdot \sqrt{f_{ck}} \cdot c_1^{1,5}$$ EN 1992-4, Enačba (7.41)

$$\alpha = 0,1 \cdot \left(\frac{l_f}{c_1}\right)^{0,5}$$ EN 1992-4, Enačba (7.42)

$$\beta = 0,1 \cdot \left(\frac{d_{nom}}{c_1}\right)^{0,2}$$ EN 1992-4, Enačba (7.43)

$$A^0_{c,V} = 4,5 \cdot c_1^2$$ EN 1992-4, Enačba (7.44)

$$\psi_{s,V} = 0,7 + 0,3 \cdot \frac{c_2}{1,5 \cdot c_1} \le 1,00$$ EN 1992-4, Enačba (7.45)

$$\psi_{h,V} = \left(\frac{1,5 \cdot c_1}{h}\right)^{0,5} \ge 1,00$$ EN 1992-4, Enačba (7.46)

$$\psi_{ec,V} = \frac{1}{1 + \left(\frac{2 \cdot e_V}{3 \cdot c_1}\right)} \le 1,00$$ EN 1992-4, Enačba (7.47)

$$\psi_{\alpha,V} = \sqrt{\frac{1}{(\cos \alpha_V)^2 + (0,5 \cdot \sin \alpha_V)^2}} \ge 1,00$$ EN 1992-4, Enačba (7.48)

$$c_1' = \max\left(\frac{c_{2,max}}{1,5}; \frac{h}{1,5}; \frac{s_{2,max}}{3}\right)$$ EN 1992-4, Enačba (7.50))

| $l_f$ [mm] | $d_{nom}$ [mm] | $k_9$ | $\alpha$ | $\beta$ | $f_{c,cyl}$ [N/mm$^2$] | $c_1$ [mm] |
|---|---|---|---|---|---|---|
| 65,0 | 14,00 | 1,700 | 0,072 | 0,064 | 25,00 | 500,0 |

| $c_1'$ [mm] | $A_{c,V}$ [mm$^2$] | $A^0_{c,V}$ [mm$^2$] | $\psi_{s,V}$ | $\psi_{h,V}$ | $e_{c,V}$ [mm] | $\psi_{ec,V}$ |
|---|---|---|---|---|---|---|
| 126,7 | 37.500 | 72.200 | 0,795 | 1,125 | 0,0 | 1,000 |

| $\alpha_V$ [°] | $\psi_{\alpha,V}$ | $\psi_{re,V}$ |
|---|---|---|
| 15,60 | 1,028 | 1,000 |

| $V^0_{Rk,c}$ [kN] | $k_T$ | $\gamma_{Mc}$ | $V_{Rd,c}$ [kN] | $V_{Ed}$ [kN] |
|---|---|---|---|---|
| 19,152 | 1,0 | 1,500 | 6,099 | 1,152 |

| ID skupine sider |
|---|
| 2 |

Vhodne podatke in rezultate je potrebno preveriti glede skladnosti z obstoječimi pogoji in verodostojnosti!
PROFIS Engineering ( c ) 2003-2025 Hilti AG, FL-9494 Schaan Hilti je registrirana blagovna znamka Hilti AG, Schaan

| | | | |
|---|---|---|---|
| Podjetje: | RAZPON d.o.o. | Stran: | 6 |
| Naslov: | Tehnološki park 20, 1000 Ljubljana | Projektant: | Igor Gorup |
| Telefon I Faks: | +38616203366 \| | E-mail: | igor.gorup@razpon.si |
| Projektiranje: | Beton - 13. Juni 2025 | Datum: | 13.06.2025 |
| Točka pritrjevanja: | Sidranje S6 | | |

### 1.5 Opozorila

- Projektne metode v programski opremi PROFIS Engineering zahtevajo uporabo absolutno toge ležiščne pločevine v skladu z regulativami (ETAG 001/Annex C, EOTA TR029, itd.). To pomeni, da se porazdelitev obremenitve na sidra zaradi elastičnih deformacij sidrne plošče ne upošteva - predpostavlja se, da je ležiščna pločevina toga, da se ne deformira, v primeru delovanja projektne obtežbe. PROFIS Engineering izračuna najmanjšo potrebno debelino ležiščne pločevine s CBFEM metodo za omejitev napetosti v ležiščni pločevini na podlagi zgornjih predpostavk. PROFIS Engineering ne dokazuje, da je predpostavka o togi ležiščni pločevini pravilna. Vhodne podatke in rezultate je potrebno preveriti, da so v skladu z obstoječimi pogoji in verodostojnosti!
- The equations presented in this report are based on metric units. When inputs are displayed in imperial units, the user should be aware that the equations remain in their metric format.
- Na splošno pogoji iz točke 4.2.2.1 in 4.2.2.3 b) ETAG 00 Dodatek C niso izpolnjeni, ker je premer luknje v ležiščni pločevini v skladu z Dodatkom 3 Tabela 3 večja od vrednosti, ki jih za ustrezen premer sidra določa Tabela 4.1 Dodatek C. Zato je projektna odpornost za skupine sider omejna na dvakratno vrednost strižne odpornosti jekla (enojnega sidra) v skladu s soglasjem.
- Potrebno je opraviti kontrolo prenosa obtežbe v osnovni material po EN 1992-4, Dodatek A!
- Izračun je veljaven samo v primeru, če luknja v ležiščni pločevini ni večja od vrednosti podane v Tabeli 6.1 of EN 1992-4!! Za večje premere izvrtin glej točko 6.2.2 of EN 1992-4!
- Seznam dodatne opreme v tem poročilu je samo za informacije uporabnika. V vsakem primeru je potrebno upoštevati navodila za uporabo, ki so priložena izdelku, da zagotovite pravilno vgradnjo.
- For the determination of the $\psi_{re,v}$ (concrete edge failure) the minimum concrete cover defined in the design settings is used as the concrete cover of the edge reinforcement.
- Load transfer from supplementary reinforcement to the structural member shall be verified by the responsible structural engineer.
- With supplementary reinforcement and post-installed anchors, please ensure that in the jobsite the rebars are not drilled through.
- Metode projektiranja v programu PROFIS Engineering zahtevajo upoštevanje toge ležiščne pločevine, skladno z veljavnimi predpisi (ETAG 001/Dodatek C, EOTA TR029, itd.). To pomeni, da je ležiščna pločevina absolutno toga in prepreči prerazporeditev obtežbe na sidra zaradi elastičnih/plastičnih pomikov. Uporabnik sprejme, da se ležiščna pločevina po inženirski presoji upošteva kot skoraj toga.
- Karakteristična sprijemna trdnost je odvisna od povratne dobe (servisna doba v letih): 50


PROFIS Engineering ( c ) 2003-2025 Hilti AG, FL-9494 Schaan Hilti je registrirana blagovna znamka Hilti AG, Schaan

| | | | |
|---|---|---|---|
| Podjetje: | RAZPON d.o.o. | Stran: | 7 |
| Naslov: | Tehnološki park 20, 1000 Ljubljana | Projektant: | Igor Gorup |
| Telefon I Faks: | +38616203366 \| | E-mail: | igor.gorup@razpon.si |
| Projektiranje: | Beton - 13. Juni 2025 | Datum: | 13.06.2025 |
| Točka pritrjevanja: | Sidranje S6 | | |

### 1.6 Podatki za vgradnjo

Ležiščna pločevina, jeklo: S 235; E = 210.000,00 N/mm$^2$; $f_{yk}$ = 235,00 N/mm$^2$
Profil: Square hollow, 80 x 80 x 4,0; (D x Š x V) = 80,0 mm x 80,0 mm x 4,0 mm

Premer luknje v ležiščni plošči: $d_f$ = 18,0 mm

Debelina ležiščne pločevine (vnos): 10,0 mm

Metoda vrtanja: Udarno vrtanje
Čiščenje: Clean the drill hole. Under the conditions - according to fastener size and drilling direction - given in the Assessment document and MPII (IFU), the cleaning of the drill hole may be omitted.

Tip in velikost sidra: HUS4-H 14 h_nom1
Številka artikla: 2293569 HUS4-H 14x75 10/-/-

Maximum installation torque: Hilti SIW 22T-A
Globina izvrtine v osnovnem materialu: 14,0 mm
Globina izvrtine v osnovnem materialu: 75,0 mm
Minimalna debelina osnovnega materiala: 120,0 mm

Hilti HUS screw anchor with 65 mm embedment, 14 hnom1, Steel galvanized, installation per ETA-20/0867

#### 1.6.1 Priporočeni dodatki

| Vrtanje | Čiščenje | Vgradnja |
|---|---|---|
| • Primerno vrtalno udarno kladivo<br>• Ustrezen sveder | • Ročni izpihovalnik | • Hilti SIW 22T-A impulzni vijačnik |

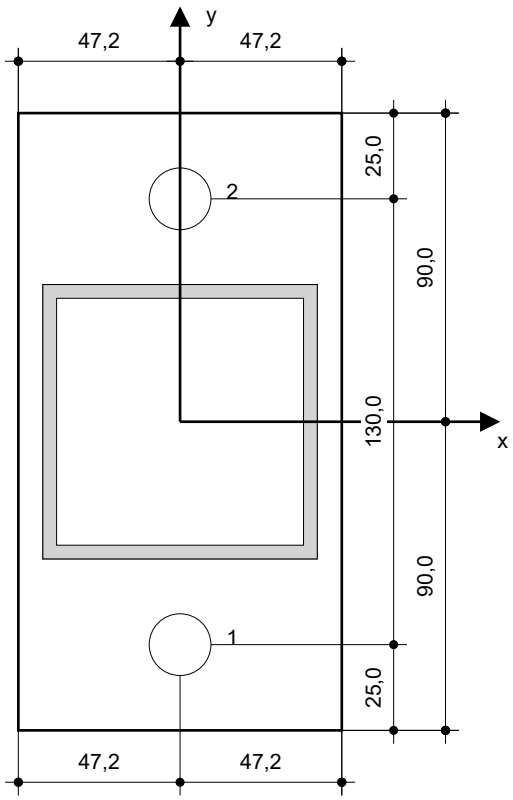


**Koordinate sidra [mm]**

| Sidro | x | y | $c_{-x}$ | $c_{+x}$ | $c_{-y}$ | $c_{+y}$ |
|---|---|---|---|---|---|---|
| 1 | −0,0 | −65,0 | 60,0 | 190,0 | 500,0 | 630,0 |
| 2 | −0,0 | 65,0 | 60,0 | 190,0 | 630,0 | 500,0 |

Vhodne podatke in rezultate je potrebno preveriti glede skladnosti z obstoječimi pogoji in verodostojnosti!
PROFIS Engineering ( c ) 2003-2025 Hilti AG, FL-9494 Schaan Hilti je registrirana blagovna znamka Hilti AG, Schaan

| | | | |
|---|---|---|---|
| Podjetje: | RAZPON d.o.o. | Stran: | 8 |
| Naslov: | Tehnološki park 20, 1000 Ljubljana | Projektant: | Igor Gorup |
| Telefon I Faks: | +38616203366 \| | E-mail: | igor.gorup@razpon.si |
| Projektiranje: | Beton - 13. Juni 2025 | Datum: | 13.06.2025 |
| Točka pritrjevanja: | Sidranje S6 | | |

# 2 Izračun ležiščne pločevine

### 2.1 Vhodni podatki

| | |
|---|---|
| Ležiščna pločevina: | Oblika: Pravokotna<br>$l_x$ x $l_y$ x t = 94,3 mm x 180,0 mm x 10,0 mm<br>Izračun: FEM<br>Material: S 235; $F_y$ = 235,00 N/mm²; $\varepsilon_{lim}$ = 5,00% |
| Tip in velikost sidra: | HUS4-H 14 h_nom1, $h_{ef}$ = 49,3 mm |
| Togost sidra: | Sidro je modelirano z upoštevanjem togosti določene iz grafov obremenitev-deformacija, na podlagi testov v neodvisnih laboratorijih. Upoštevajte, da enostavna zamenjava sidra ni mogoča, saj togost sidra močno vpliva na rezultate porazdelitve obtežbe. |
| Projektna metoda: | EN-based design uporaba MKE z upoštevanjem posameznih komponent |
| Vgradnja z nadvišanjem: | $e_b$ = 0,0 mm (No stand-off); t = 10,0 mm |
| Profil: | 80 x 80 x 4,0; (L x W x T x FT) = 80,0 mm x 80,0 mm x 4,0 mm x -<br>Material: S 235; $F_y$ = 235,00 N/mm²; $\varepsilon_{lim}$ = 5,00%<br>Ekscentričnost x: 0,0 mm<br>Ekscentričnost y: 0,0 mm |
| Osnovni material: | Cracked concrete; C25/30; $f_{c,cyl}$ = 25,00 N/mm²; h = 150,0 mm; E = 31.000,00 N/mm²; G = 12.916,67 N/mm²; v = 0,20 |
| Zvari (profil na ležiščno pločevino): | Tip razporeditve: Plastičen<br>Material: S 235 |
| Velikost mreže: | Število elementov na robu: 8<br>Min. velikost elementa: 10,0 mm<br>Maks. velikost elementa: 50,0 mm |

### 2.2 Povzetek

| | Opis | Profil | | Ležiščna pločevina | | | Zvari [%] | Beton [%] |
|---|---|---|---|---|---|---|---|---|
| | | $\sigma_{Ed}$ [N/mm²] | $\varepsilon_{Pl}$ [%] | $\sigma_{Ed}$ [N/mm²] | $\varepsilon_{Pl}$ [%] | Nosilnost pločevine na bočni pritisk v območju luknje [%] | | |
| 1 | Kombination 1 | 18,35 | 0,00 | 12,07 | 0,00 | 2 | 7 | 11 |

### 2.3 Klasifikacija ležiščne pločevine

Spodnji rezultati so prikazani za merodajno obtežno kombinacijo: Kombination 1

| Natezne sile v sidru | Ekvivalentno toga ležiščna pločevina (FEM) | Projektiranje z upoštevanjem podajne ležiščne pločevine (FEM) |
|---|---|---|
| Sidro 1 | 0,000 kN | 0,000 kN |
| Sidro 2 | 0,000 kN | 0,000 kN |

Uporabnik je sprejel, da je obnašanje ležiščne pločevine 100 % togo, po svoji inženirski presoji.To pomeni, da so lahko uporabljene smernice za dimenzioniranje sider.

### 2.4 Profil/Toge ojačitve/Ležiščna pločevina

Profil in jeklene toge ojačitve so preverjene na ravni povezave jekla z betonom. Projektiranje detajla ne nadomesti projektiranja kritičnega jeklenega prereza, tovrstni izračun mora biti preverjen z drugim programom in ne PROFIS Engineering-om.

#### 2.4.1 Nadomestna napetost in plastična deformacija

Kriterij mejnega stanja po EN1993-1-5 Dodatek C.8, (1) 2.

**Rezultati**

| Del | Obtežna kombinacija | Material | $\sigma_{Ed}$ [N/mm²] | $\varepsilon_{Pl}$ [%] | $f_y$ [N/mm²] | $\gamma_{M0}$ | $f_y/\gamma_{M0}$ [N/mm²] | $\varepsilon_{lim}$ [%] | Status |
|---|---|---|---|---|---|---|---|---|---|
| Ležiščna pločevina | Kombination 1 | S 235 | 12,07 | 0,00 | 235,00 | 1,00 | 235,00 | 5,00 | OK |

Vhodne podatke in rezultate je potrebno preveriti glede skladnosti z obstoječimi pogoji in verodostojnosti!
PROFIS Engineering ( c ) 2003-2025 Hilti AG, FL-9494 Schaan Hilti je registrirana blagovna znamka Hilti AG, Schaan

| | | | |
|---|---|---|---|
| Podjetje: | RAZPON d.o.o. | Stran: | 9 |
| Naslov: | Tehnološki park 20, 1000 Ljubljana | Projektant: | Igor Gorup |
| Telefon I Faks: | +38616203366 \| | E-mail: | igor.gorup@razpon.si |
| Projektiranje: | Beton - 13. Juni 2025 | Datum: | 13.06.2025 |
| Točka pritrjevanja: | Sidranje S6 | | |

| Del | Obtežna kombinacija | Material | $\sigma_{Ed}$ [N/mm²] | $\varepsilon_{Pl}$ [%] | $f_y$ [N/mm²] | $\gamma_{M0}$ | $f_y/\gamma_{M0}$ [N/mm²] | $\varepsilon_{lim}$ [%] | Status |
|---|---|---|---|---|---|---|---|---|---|
| Profil | Kombination 1 | S 235 | 14,80 | 0,00 | 235,00 | 1,00 | 235,00 | 5,00 | OK |
| Profil | Kombination 1 | S 235 | 18,29 | 0,00 | 235,00 | 1,00 | 235,00 | 5,00 | OK |
| Profil | Kombination 1 | S 235 | 18,35 | 0,00 | 235,00 | 1,00 | 235,00 | 5,00 | OK |
| Profil | Kombination 1 | S 235 | 16,46 | 0,00 | 235,00 | 1,00 | 235,00 | 5,00 | OK |

#### 2.4.1.1 Nadomestna napetost

Spodnji rezultati so prikazani za merodajno obtežno kombinacijo: 1 - Kombination 1

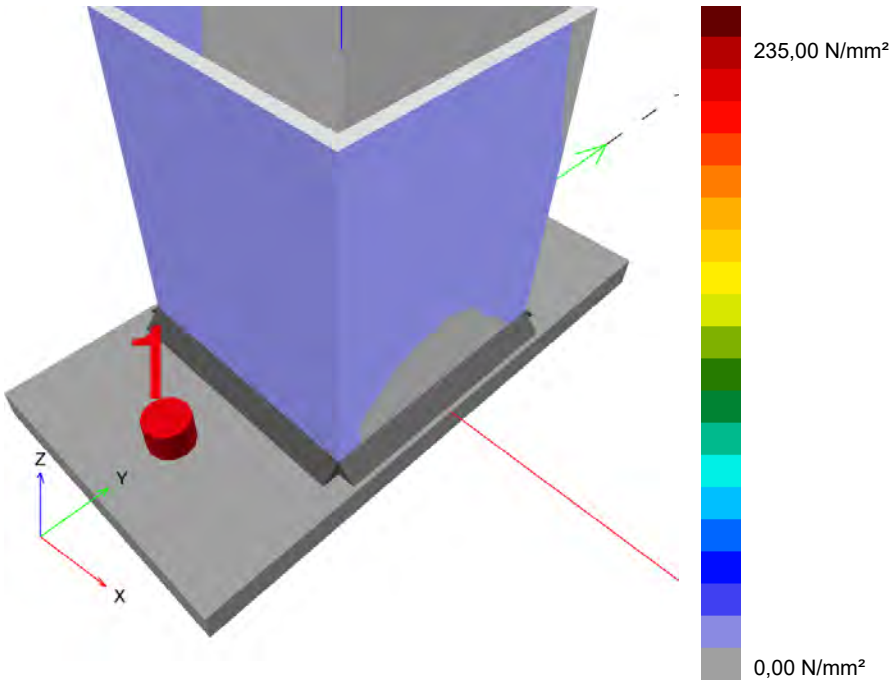



PROFIS Engineering ( c ) 2003-2025 Hilti AG, FL-9494 Schaan Hilti je registrirana blagovna znamka Hilti AG, Schaan

| | | | |
|---|---|---|---|
| Podjetje: | RAZPON d.o.o. | Stran: | 10 |
| Naslov: | Tehnološki park 20, 1000 Ljubljana | Projektant: | Igor Gorup |
| Telefon I Faks: | +38616203366 \| | E-mail: | igor.gorup@razpon.si |
| Projektiranje: | Beton - 13. Juni 2025 | Datum: | 13.06.2025 |
| Točka pritrjevanja: | Sidranje S6 | | |

#### 2.4.1.2 Napetost na meji plastičnosti

Spodnji rezultati so prikazani za merodajno obtežno kombinacijo: 1 - Kombination 1

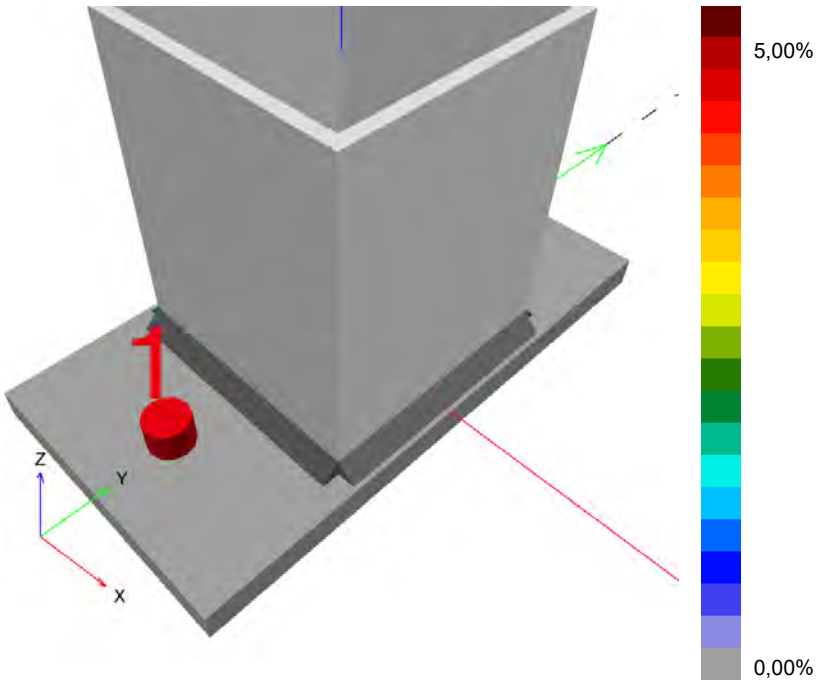


#### 2.4.2 Nosilnost pločevine na bočni pritisk v območju luknje

Merodajna obtežna kombinacija: 1 - Kombination 1

Nosilnost pločevine na bočni pritisk, EN1993-1 - 8 točka 3.6.1:

**Enačbe**

$$F_{b,Rd} = \frac{k_1 \, a_b \, f_u \, d \, t}{\gamma_{M2}}$$

$$\text{Izkoriščenost} = \frac{V_{Ed}}{F_{b,Rd}}$$

**Spremenljivke**

| | $k_1$ | $a_b$ | $f_u$ [N/mm²] | d [mm] | t [mm] | $\gamma_{M2}$ |
|---|---|---|---|---|---|---|
| Sidro 1 | 2,50 | 0,53 | 360,00 | 14,0 | 10,0 | 1.25 |
| Sidro 2 | 2,50 | 1,00 | 360,00 | 14,0 | 10,0 | 1.25 |

**Rezultati**

| | $V_{Ed}$ [kN] | $F_{b,Rd}$ [kN] | Izkoriščenost [%] | Status |
|---|---|---|---|---|
| Sidro 1 | 0,627 | 53,697 | 2 | OK |
| Sidro 2 | 0,644 | 100,800 | 1 | OK |

### 2.5 Zvari

Profili so modelirani brez upoštevanja kotnega radija. Posebna pravila varjenja (kot naprimer: hladno valjani profili...) niso upoštevana v programu.

Vhodne podatke in rezultate je potrebno preveriti glede skladnosti z obstoječimi pogoji in verodostojnosti!
PROFIS Engineering ( c ) 2003-2025 Hilti AG, FL-9494 Schaan Hilti je registrirana blagovna znamka Hilti AG, Schaan

| | | | |
|---|---|---|---|
| Podjetje: | RAZPON d.o.o. | Stran: | 11 |
| Naslov: | Tehnološki park 20, 1000 Ljubljana | Projektant: | Igor Gorup |
| Telefon I Faks: | +38616203366 \| | E-mail: | igor.gorup@razpon.si |
| Projektiranje: | Beton - 13. Juni 2025 | Datum: | 13.06.2025 |
| Točka pritrjevanja: | Sidranje S6 | | |


### 2.5.1 Ležiščna pločevina na profil

Merodajna obtežna kombinacija: 1 - Kombination 1

Izračun zvarov, EN1993-1-8 točka 4.5.3.2

Minimalna debelina zvara ležiščna pločevina na stojino profila ($a_{min}$): 3,0 mm

Minimalna debelina zvara med ležiščno pločevino in pasnico profila ($a_{min}$): 3,0 mm

**Enačbe**

$$\sigma_{w,Ed} = (\sigma_{\perp}^2 + 3\,(\tau_{\perp}^2 + \tau_{||}^2))^{0.5}$$

$$\sigma_{w,Rd} = \frac{f_u}{\beta_w\,\gamma_{M2}}$$

$$\sigma_{\perp,Rd} = 0.9\frac{f_u}{\gamma_{M2}}$$

$$\text{Izkoriščenost} = \max\left(\frac{\sigma_{w,Ed}}{\sigma_{w,Rd}};\frac{|\sigma_{\perp}|}{\sigma_{\perp,Rd}}\right)$$

**Spremenljivke**

| Zvar | $\beta_w$ | $f_u$ [N/mm²] | $\gamma_{M2}$ |
|---|---|---|---|
| Stojina | 0,80 | 360,00 | 1,25 |
| Pasnica | 0,80 | 360,00 | 1,25 |

| Rob | a [mm] | L [mm] | $\varepsilon_{Pl}$ [%] | $\sigma_{\perp}$ [N/mm²] | $\tau_{||}$ [N/mm²] | $\tau_{\perp}$ [N/mm²] |
|---|---|---|---|---|---|---|
| Member 1-tfl 1 | ◢4,0 | 80,0 | 0,00 | −5,41 | −6,98 | −5,26 |
| Member 1-bfl 1 | 4,0◣ | 80,0 | 0,00 | −4,83 | 7,98 | 5,61 |
| Member 1-w 1 | ◢4,0 | 72,0 | 0,00 | −11,81 | −1,12 | −12,70 |
| Member 1-w 2 | 4,0◣ | 72,0 | 0,00 | −17,06 | 0,99 | 9,74 |

**Rezultati**

| Rob | $\sigma_{w,Ed}$ [N/mm²] | $\sigma_{w,Rd}$ [N/mm²] | $\sigma_{\perp,Rd}$ [N/mm²] | Izkoriščenost [%] | Izkoriščenost$_c$ [%] | Status |
|---|---|---|---|---|---|---|
| Member 1-tfl 1 | 16,09 | 360,00 | 259,20 | 5 | 4 | OK |
| Member 1-bfl 1 | 17,57 | 360,00 | 259,20 | 5 | 4 | OK |
| Member 1-w 1 | 25,05 | 360,00 | 259,20 | 7 | 7 | OK |
| Member 1-w 2 | 24,05 | 360,00 | 259,20 | 7 | 6 | OK |

### 2.6 Beton

Merodajna obtežna kombinacija: 1 - Kombination 1

V skladu s standardom EN1992-1-1 točka 6.7(4), mora biti beton dovolj armiran za prevzem nateznih sil, ki jih povzroči pritrjeni element. Programska oprema PROFIS Engineering ne zajema določitve potrebne armature v betonu.

Vhodne podatke in rezultate je potrebno preveriti glede skladnosti z obstoječimi pogoji in verodostojnosti!
PROFIS Engineering ( c ) 2003-2025 Hilti AG, FL-9494 Schaan Hilti je registrirana blagovna znamka Hilti AG, Schaan

| | | | |
|---|---|---|---|
| Podjetje: | RAZPON d.o.o. | Stran: | 12 |
| Naslov: | Tehnološki park 20, 1000 Ljubljana | Projektant: | Igor Gorup |
| Telefon I Faks: | +38616203366 \| | E-mail: | igor.gorup@razpon.si |
| Projektiranje: | Beton - 13. Juni 2025 | Datum: | 13.06.2025 |
| Točka pritrjevanja: | Sidranje S6 | | |

### 2.6.1 Pritisk na beton pod ležiščno pločevino

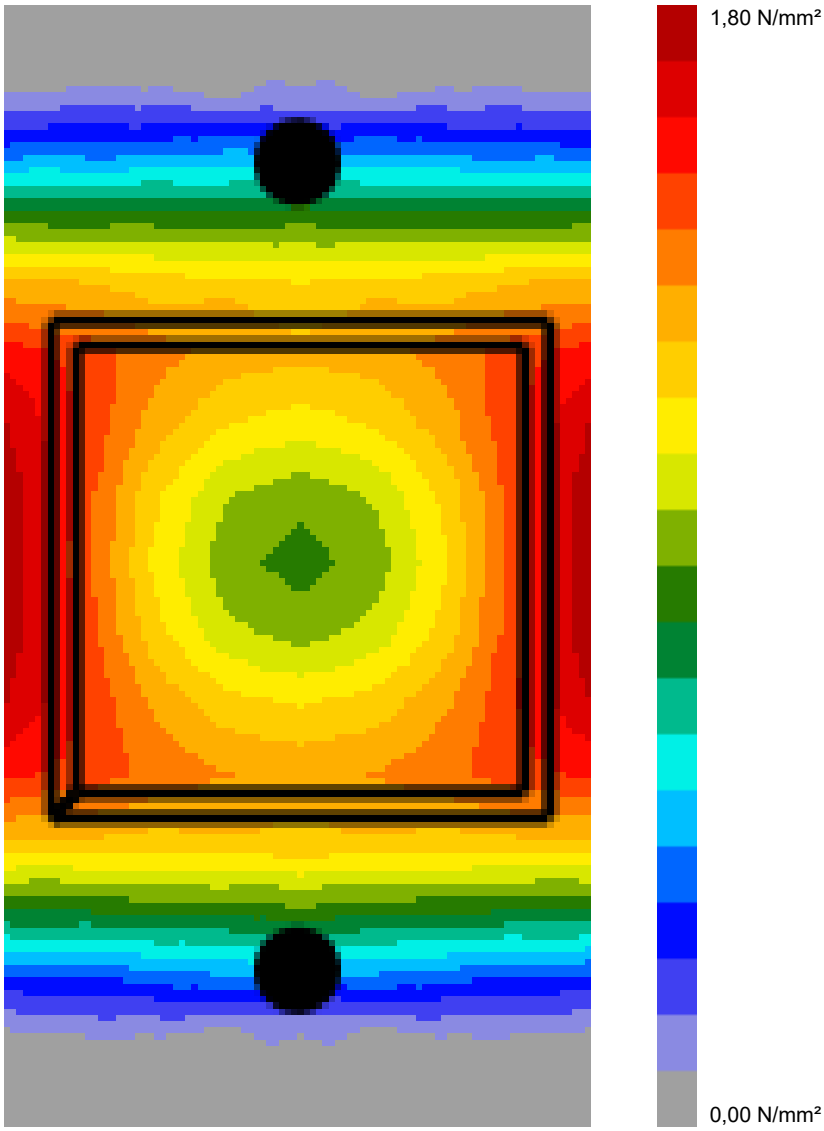


### 2.6.2 Kontrola tlačnih napetosti v betonu pod ležiščno pločevino okoli profila po EN1992-1 točka 6.7 in EN1993-1-8, točka 6.2.5

**Enačbe**

$$f_{jd} = \frac{\beta_j \, k_j \, \alpha_{cc} \, f_{ck}}{\gamma_c}$$

$$\sigma = \frac{N}{A_{eff}}$$

$$\text{Izkoriščenost} = \frac{\sigma}{f_{jd}}$$

Vhodne podatke in rezultate je potrebno preveriti glede skladnosti z obstoječimi pogoji in verodostojnosti!
PROFIS Engineering ( c ) 2003-2025 Hilti AG, FL-9494 Schaan Hilti je registrirana blagovna znamka Hilti AG, Schaan

| | | | |
|---|---|---|---|
| Podjetje: | RAZPON d.o.o. | Stran: | 13 |
| Naslov: | Tehnološki park 20, 1000 Ljubljana | Projektant: | Igor Gorup |
| Telefon I Faks: | +38616203366 \| | E-mail: | igor.gorup@razpon.si |
| Projektiranje: | Beton - 13. Juni 2025 | Datum: | 13.06.2025 |
| Točka pritrjevanja: | Sidranje S6 | | |

**Spremenljivke**

| N [kN] | $A_{eff}$ [mm²] | $\beta_j$ | $k_j$ | $\alpha_{cc}$ | $f_{ck}$ [N/mm²] | $\gamma_c$ |
|---|---|---|---|---|---|---|
| 14,854 | 11.737 | 0,67 | 1,26 | 0,85 | 25,00 | 1,50 |

**Rezultati**

| σ [N/mm²] | $f_{jd}$ [N/mm²] | Izkoriščenost [%] | Status |
|---|---|---|---|
| 1,27 | 12,00 | 11 | OK |

### 2.7 Pomen simbolov

| | |
|---|---|
| a | Debelina zvara |
| $a_b$ | Faktor |
| $\alpha_{cc}$ | Dolgotrajne posledice na maksimalno trdnost betona |
| $A_{eff}$ | Efektivna površina |
| $a_{min}$ | Minimalna debelina zvara |
| $\beta_j$ | Koeficient spoja $\beta_j$ |
| $\beta_w$ | Korelacijski faktor EN 1993-1-8 tab. 4.1 |
| d | Nominalni premer vijaka |
| $\varepsilon_{lim}$ | Mejna plastična deformacija |
| $\varepsilon_{Pl}$ | Plastična deformacija po CBFEM |
| $F_{b,Rd}$ | Odpornost ležiščne pločevine EN 1993-1-8 tab. 3.4 |
| $f_{ck}$ | Karakteristična tlačna trdnost betona |
| $f_{jd}$ | Mejna odpornost betonske kocke |
| $f_u$ | Mejna odpornost |
| $f_y$ | Meja tečenja |
| $\gamma_c$ | Faktor uporabe - SP 16, Tabela 41 |
| $\gamma_{M0}$ | Varnostni faktor jekla gamma M0 |
| $\gamma_{M2}$ | Varnostni faktor jekla gamma M2 |
| $k_1$ | Faktor oddaljenosti od roba in razmak med vijaki pravokotno na smer prenosa obremenitve - EN 1993-1-8 - Tabela 3.4 |
| $k_j$ | Faktor koncentracije |
| L | Dolžina zvara |
| N | Rezultanta tlačne sile |
| σ | Povprečna napetost v betonu |
| $\sigma_\perp$ | Pravokotne napetosti |
| $\sigma_{\perp,Rd}$ | Odpornost na pravokotne napetosti |
| $\sigma_{Ed}$ | Nadomestna napetost |
| $\sigma_{w,Ed}$ | Nadomestna napetost |
| $\sigma_{w,Rd}$ | Odpornost nadomestne napetosti |
| t | Debelina ležiščne pločevine |
| $\tau_\perp$ | Strižna napetost pravokotno na os zvara |
| $\tau_{\parallel}$ | Strižna napetost pravokotno na os zvara |
| $Izkoriščenost_c$ | Izkoriščenost zvarov |
| $V_{Ed}$ | Strižna sila na sidro |

### 2.8 Opozorila

- Z uporabo funkcionalnosti podajne ležiščne pločevine programa PROFIS Engineering ste mogoče izven okvirov standarda in vaša specificirana ležiščna pločevina se ne bo obnašala togo. Prosimo vas, da preverite rezultate s kompetentnim odgovornim projektantom za zagotovitev primernosti in ustreznosti za vaše specifične pristojnosti in projektne zahteve.
- Sidro je modelirano z upoštevanjem togosti določene iz grafov obremenitev-deformacija, na podlagi testov v neodvisnih laboratorijih. Upoštevajte, da enostavna zamenjava sidra ni mogoča, saj togost sidra močno vpliva na rezultate porazdelitve obtežbe.

Vhodne podatke in rezultate je potrebno preveriti glede skladnosti z obstoječimi pogoji in verodostojnosti!
PROFIS Engineering ( c ) 2003-2025 Hilti AG, FL-9494 Schaan Hilti je registrirana blagovna znamka Hilti AG, Schaan

| | | | |
|---|---|---|---|
| Podjetje: | RAZPON d.o.o. | Stran: | 14 |
| Naslov: | Tehnološki park 20, 1000 Ljubljana | Projektant: | Igor Gorup |
| Telefon I Faks: | +38616203366 \| | E-mail: | igor.gorup@razpon.si |
| Projektiranje: | Beton - 13. Juni 2025 | Datum: | 13.06.2025 |
| Točka pritrjevanja: | Sidranje S6 | | |

## 3 Povzetek rezultatov

Izračun ležiščne pločevine, sider, zvarov in ostalih elementov je zasnovan po metodi CBFEM (metoda končnih elementov z upoštevanjem posameznih komponent) in regulativ iz Evrokoda.

| | Obtežna kombinacija | Maks. izkoriščenost | Status |
|---|---|---|---|
| Sidra | Kombination 1 | 19% | OK |
| Ležiščna pločevina | Kombination 1 | 6% | OK |
| Zvari | Kombination 1 | 7% | OK |
| Beton | Kombination 1 | 11% | OK |
| Profil | Kombination 1 | 8% | OK |

**Izbrano pritrjevanje ustreza projektnim pogojem!**

Vhodne podatke in rezultate je potrebno preveriti glede skladnosti z obstoječimi pogoji in verodostojnosti!
PROFIS Engineering ( c ) 2003-2025 Hilti AG, FL-9494 Schaan Hilti je registrirana blagovna znamka Hilti AG, Schaan

| | | | |
|---|---|---|---|
| Podjetje: | RAZPON d.o.o. | Stran: | 15 |
| Naslov: | Tehnološki park 20, 1000 Ljubljana | Projektant: | Igor Gorup |
| Telefon I Faks: | +38616203366 \| | E-mail: | igor.gorup@razpon.si |
| Projektiranje: | Beton - 13. Juni 2025 | Datum: | 13.06.2025 |
| Točka pritrjevanja: | Sidranje S6 | | |

## 4 Opombe; Vaše dolžnosti sodelovanja

- Vse informacije in podatki, ki jih vsebuje programska oprema, se nanašajo izključno na uporabo izdelkov Hilti in temeljijo na načelih, formulah in varnostnih predpisih v skladu s tehničnimi navodili podjetja Hilti ter navodili za uporabo, montažo in montažo itd. ki jih mora uporabnik dosledno upoštevati. Vse vsebovane vrednosti so povprečne številke, zato je treba pred uporabo ustreznega izdelka Hilti opraviti preskuse, specifične za uporabo. Rezultati izračunov s programsko opremo v osnovi temeljijo na podatkih, ki jih vnesete. Zato prevzemate vso odgovornost za odsotnost napak, popolnost in ustreznost podatkov, ki jih morate vnesti. Poleg tega prevzemate vso odgovornost za to, da rezultate izračunov pregleda in popravi strokovnjak, zlasti glede skladnosti z veljavnimi normativi in dovoljenji, preden jih uporabite za svoj specifični objekt. Programska oprema služi le kot pomoč pri razlagi norm in dovoljenj brez kakršnega koli jamstva o odsotnosti napak, pravilnosti in ustreznosti rezultatov ali primernosti za določeno aplikacijo.
- Za preprečevanje ali omejitev škode, ki jo povzroča programska oprema, morate sprejeti vse potrebne in razumne ukrepe. Zlasti morate poskrbeti za redno varnostno kopiranje izračunov in podatkov ter po potrebi redno posodabljati programsko opremo, ki jo ponuja Hilti. Če ne uporabljate funkcije AutoUpdate programske opreme, morate z uporabo ročnih posodobitev prek spletnega mesta Hilti zagotoviti, da uporabljate trenutno in posodobljeno različico programske opreme. Hilti ne bo odgovoren za posledice, kot so obnovitev izgubljenih ali poškodovanih podatkov ali programov, ki so posledica krivdne kršitve dolžnosti.

Vhodne podatke in rezultate je potrebno preveriti glede skladnosti z obstoječimi pogoji in verodostojnosti!
PROFIS Engineering ( c ) 2003-2025 Hilti AG, FL-9494 Schaan Hilti je registrirana blagovna znamka Hilti AG, Schaan

# ERECTION DRAWING LIST



RAZPON d.o.o.
Tehnološki park 20,
1000 Ljubljana

www.razpon.si

| | | | |
|---|---|---|---|
| List contents: | Jeklena Konstrukcija | Author: | Jan Krstič |
| Project name: | SEVEROZAHODNA POKRITA TRI | Date: | 27.06.2025 |
| Project address: | POMOZNIMI PROSTORI NA OBM | Revision: | |
| | STADIONA FAZANARIJA | Revision date: | |
| Project number: | P02/2025 | Revision by: | |
| Document number: | | | |

| Drawing Number | Rev | Drawing Name | | Drawing date | Revision date |
|---|---|---|---|---|---|
| | | | | | |
| D1 | | 3D Pogled | | 27.06.2025 | |
| D2 | | 3D Pogled 1 | | 27.06.2026 | |
| D3 | | Tloris Sidranja | | 27.06.2027 | |
| D4 | | Tloris Sidranja Detajli | | 27.06.2028 | |
| D5 | | Tloris Etaže | | 27.06.2029 | |
| D6 | | Tloris Strehe | | 27.06.2030 | |
| D7 | | Tloris Strehe - Detajli | | 27.06.2031 | |
| D8 | | Prerez v osi Gj-0 | Prerez v osi Gj-1 | 27.06.2032 | |
| D9 | | Prerez v osi Gj-3 | Prerez v osi Gj-7 | 27.06.2033 | |
| D10 | | Prerez v osi Gj-A | | 27.06.2034 | |
| D11 | | Prerez v osi Gj-B | | 27.06.2035 | |
| D12 | | Prerez v osi Gj-C | | 27.06.2036 | |
| D13 | | Etazna plosca - Plocevina | | 27.06.2037 | |
| D14 | | Etazna plosca - Armatura | | 27.06.2038 | |
| D15 | | Tloris Stresne plocevine | | 27.06.2039 | |

3d

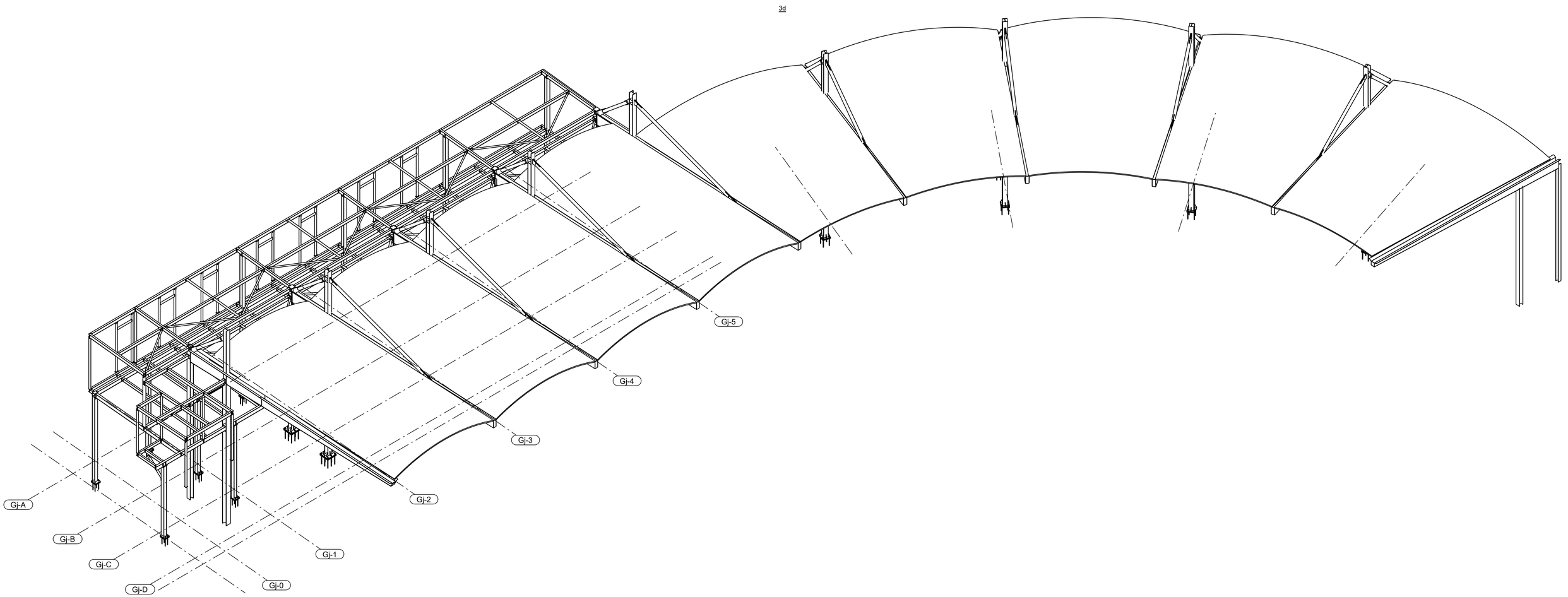


SPLOSNE OPOMBE:
- nacrt glej skupaj z nacrtom arhitekture ter drugimi nacrti ki sestavljajo projekt.
- vse mere je potrebno preveriti na gradbiscu samem ter skupaj z ostalimi nacrti.
- izbrani izdelovalec konstrukcije mora izdelati delavniske nacrte skupaj z vsemi detajli ter jih poslati projektantu v pregled.
- v primeru kakrsnih koli odstopanj ali nejasnosti je potrebno o tem obvestiti projektanta, ki bo podal nadalnja navodila
- jekelena konstrukcija spada v razred EXC2 skladno s SIST EN 1090-2
- material jeklene konstrukcije S355J2 (profili in plocevine)

| Mark | Revision | Creat. | Date | Check. | Appr. |
|---|---|---|---|---|---|
| | | | | | |

| | |
|---|---|
| District/village / Block/estate / Building lot | Building permit code |
| Building action | Drawing category / Running number |
| Construction site and address: SEVEROZAHODNA POKRITA TRIBUNA S POMOZNIMI PROSTORI NA OBMOCJU STADIONA FAZANARIJA | Content of drawing: 3D Pogled; Scale: 1:100 |
| RAZPON d.o.o.<br>Tehnološki park 20,<br>1000 Ljubljana<br>tel. | |
| Drawn by: Jan Krstic; Designed by: mag. Igor Gorup | Drawing type: PZI; Project number: P02/2025 |
| Date: Junij 2025; Approved by: Andrej Kalamar | Drawing number: D1; Revision: |

Tekla Structures

3d

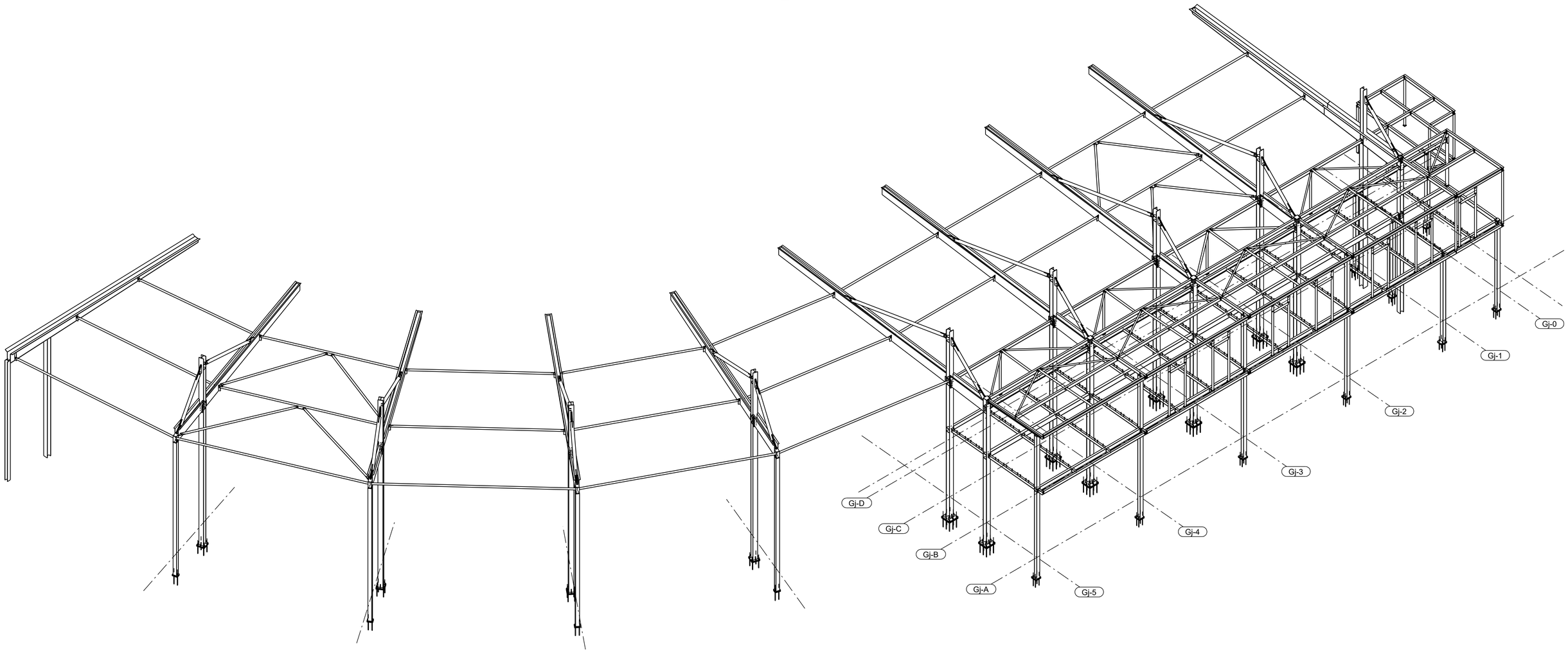


SPLOSNE OPOMBE:
- nacrt glej skupaj z nacrtom arhitekture ter drugimi nacrti ki sestavljajo projekt.
- vse mere je potrebno preveriti na gradbiscu samem ter skupaj z ostalimi nacrti.
- izbrani izdelovalec konstrukcije mora izdelati delavniske nacrte skupaj z vsemi detajli ter jih poslati projektantu v pregled.
- v primeru kakrsnih koli odstopanj ali nejasnosti je potrebno o tem obvestiti projektanta, ki bo podal nadalnja navodila
- jekelena konstrukcija spada v razred EXC2 skladno s SIST EN 1090-2
- material jeklene konstrukcije S355J2 (profili in plocevine)

| Mark | Revision | Creat. | Date | Check. | Appr. |
|---|---|---|---|---|---|

District/village | Block/estate | Building lot

Building permit code

Building action

Drawing category | Running number

Construction site and address
SEVEROZAHODNA POKRITA TRIBUNA S POMOZNIMI PROSTORI NA OBMOCJU STADIONA FAZANARIJA

Content of drawing
3D Pogled 1

Scale
1:100

RAZPON d.o.o.
Tehnološki park 20,
1000 Ljubljana
tel.

| Drawn by | Designed by | Drawing type | Project number |
|---|---|---|---|
| Jan Krstic | mag. Igor Gorup | PZI | P02/2025 |
| Date | Approved by | Drawing number | Revision |
| Junij 2025 | Andrej Kalamar | D2 | |

Tekla Structures

PLAN -1390
1:100

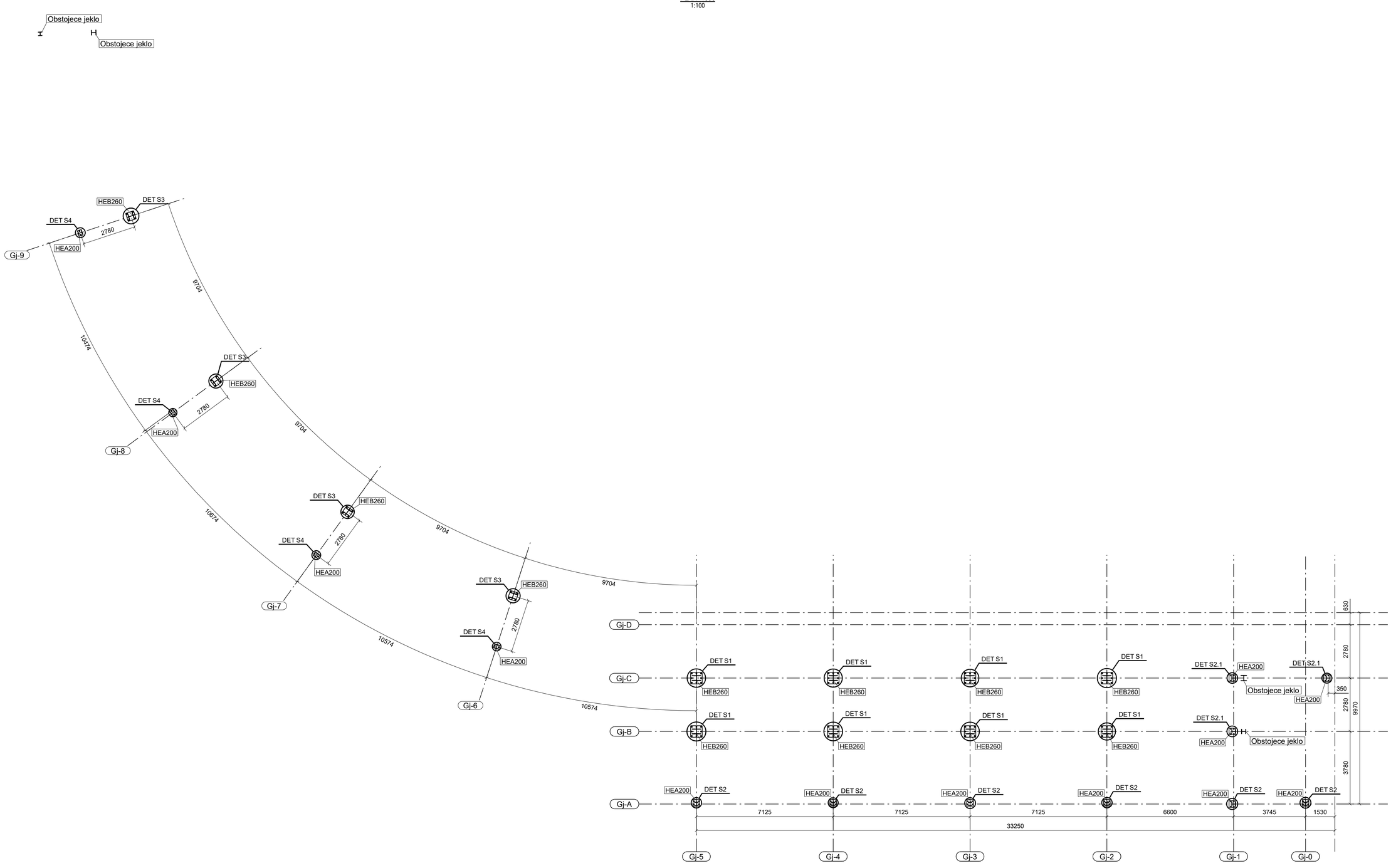


SPLOSNE OPOMBE:
- nacrt glej skupaj z nacrtom arhitekture ter drugimi nacrti ki sestavljajo projekt.
- vse mere je potrebno preveriti na gradbiscu samem ter skupaj z ostalimi nacrti.
- izbrani izdelovalec konstrukcije mora izdelati delavniske nacrte skupaj z vsemi detajli ter jih poslati projektantu v pregled.
- v primeru kakrsnih koli odstopanj ali nejasnosti je potrebno o tem obvestiti projektanta, ki bo podal nadalnja navodila
- jekelena konstrukcija spada v razred EXC2 skladno s SIST EN 1090-2
- material jeklene konstrukcije S355J2 (profili in plocevine)

| Mark | Revision | Creat. | Date | Check. | Appr. |
|---|---|---|---|---|---|

| | | |
|---|---|---|
| District/village / Block/estate / Building lot | | Building permit code |
| Building action | | Drawing category / Running number |
| Construction site and address: SEVEROZAHODNA POKRITA TRIBUNA S POMOZNIMI PROSTORI NA OBMOCJU STADIONA FAZANARIJA | Content of drawing: Tloris Sidranja | Scale: 1:10, 1:15, 1:100 |
| RAZPON d.o.o., Tehnološki park 20, 1000 Ljubljana, tel. | | |
| Drawn by: Jan Krstic | Designed by: mag. Igor Gorup | Drawing type: PZI / Project number: P02/2025 |
| Date: Junij 2025 | Approved by: Andrej Kalamar | Drawing number: D3 / Revision |

Tekla Structures

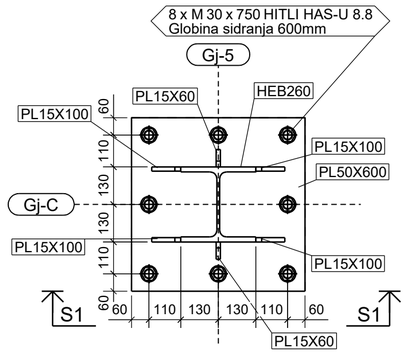


DETAIL S1
1:15

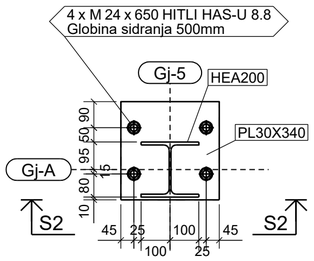


DETAIL S2
1:15

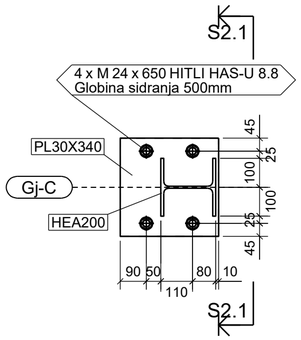


DETAIL S2.1
1:15

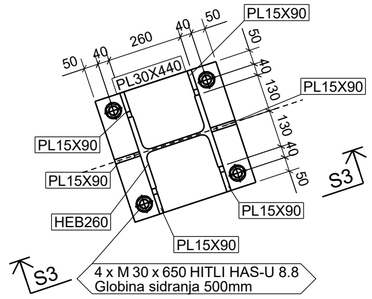


DETAIL S3
1:15

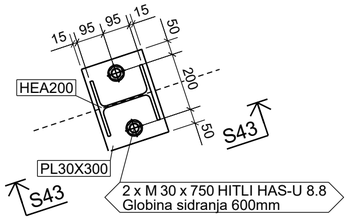


DETAIL S4
1:15

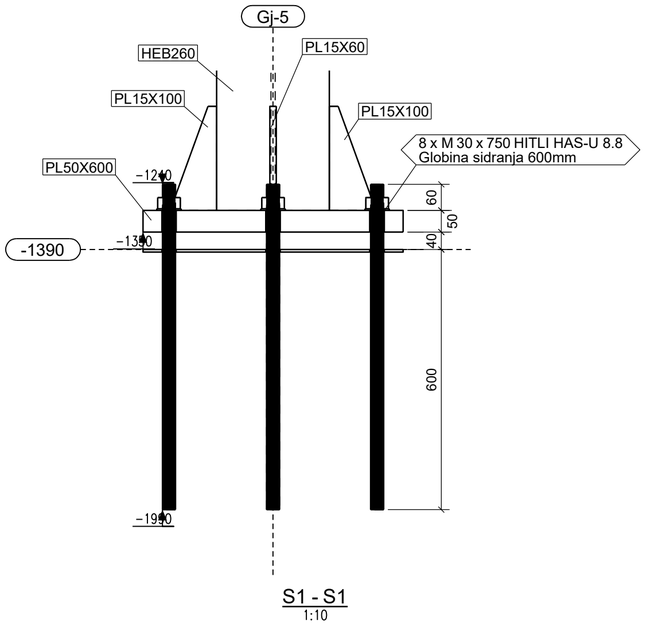


S1 - S1
1:10

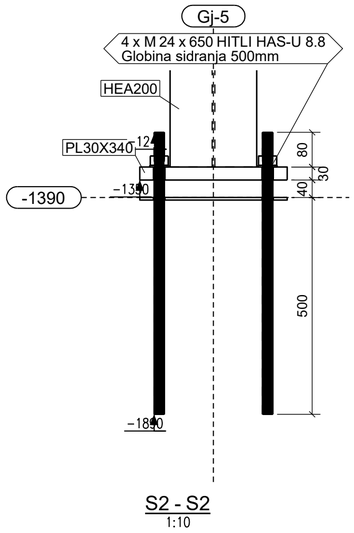


S2 - S2
1:10

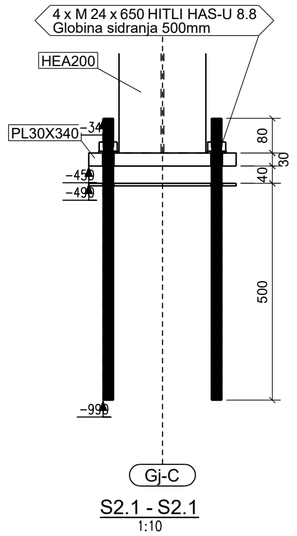


S2.1 - S2.1
1:10

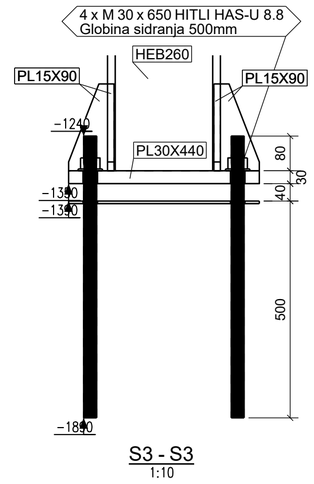


S3 - S3
1:10

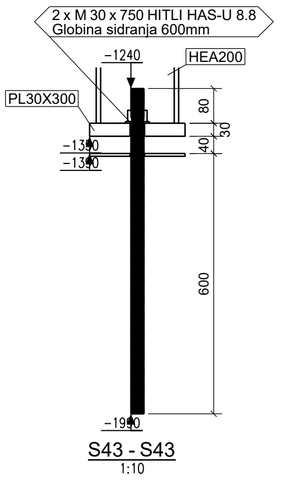


S43 - S43
1:10

| Mark | Revision | Creat. | Date | Check. | Appr. |
|---|---|---|---|---|---|

| | | |
|---|---|---|
| District/village / Block/estate / Building lot | | Building permit code |
| Building action | | Drawing category / Running number |
| Construction site and address: SEVEROZAHODNA POKRITA TRIBUNA S POMOZNIMI PROSTORI NA OBMOCJU STADIONA FAZANARIJA | Content of drawing: Tloris Sidranja Detajli | Scale: 1:10, 1:15, 1:100 |
| RAZPON d.o.o. Tehnološki park 20, 1000 Ljubljana tel. | | |
| Drawn by: Jan Krstic | Designed by: mag. Igor Gorup | Drawing type: PZI / Project number: P02/2025 |
| Date: Junij 2025 | Approved by: Andrej Kalamar | Drawing number: D4 / Revision |

Tekla Structures

PLAN +4780
1:100

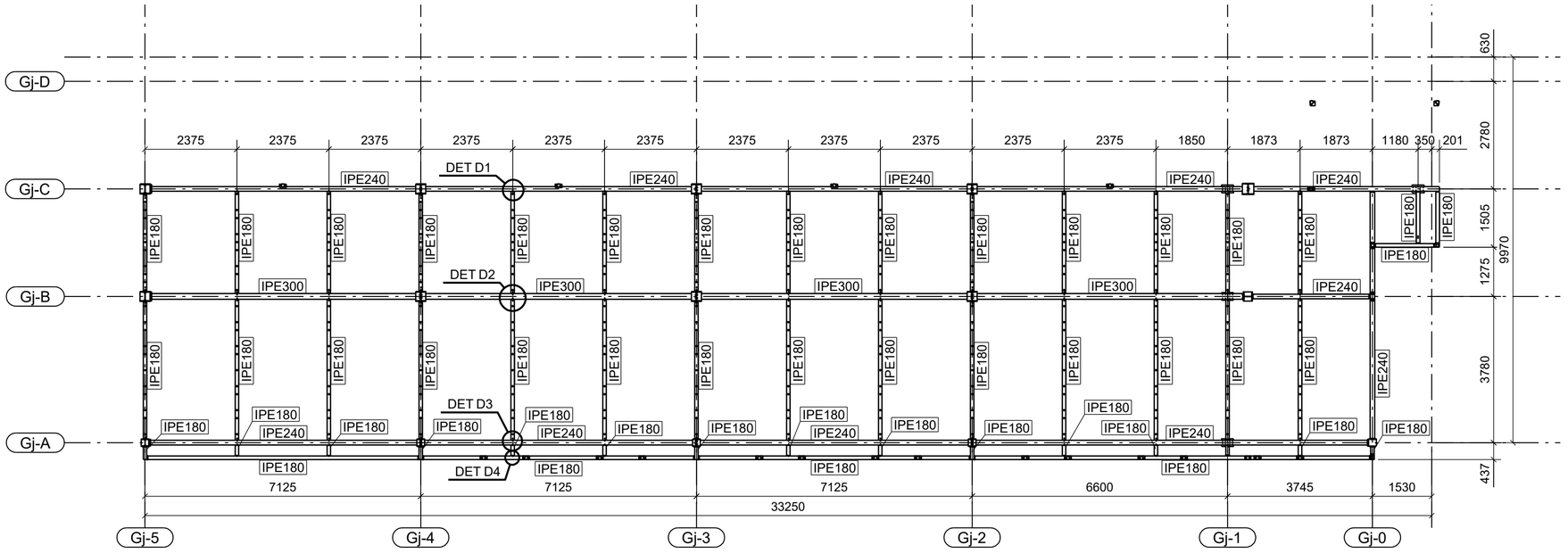


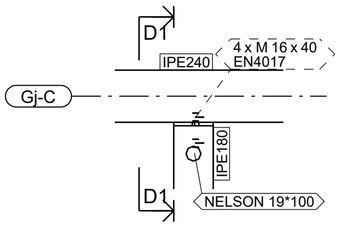


DETAIL D1
1:10

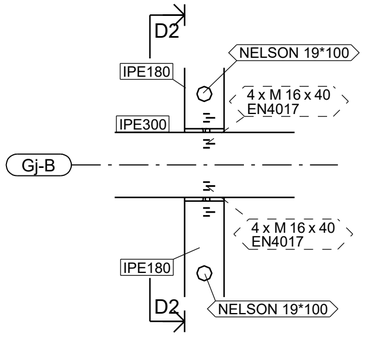


DETAIL D2
1:10

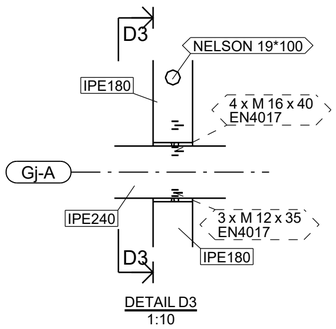


DETAIL D3
1:10

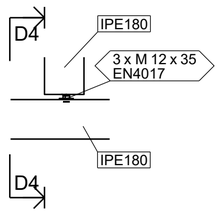


DETAIL D4
1:10

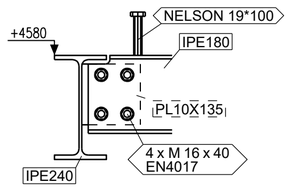


D1 - D1
1:10

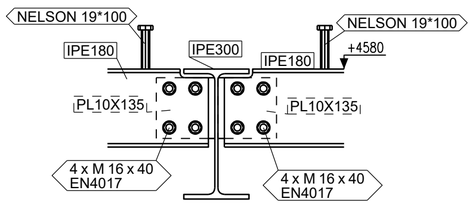


D2 - D2
1:10

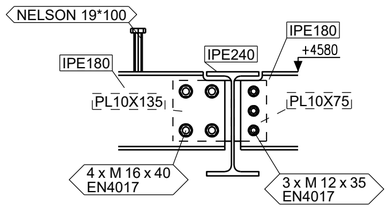


D3 - D3
1:10

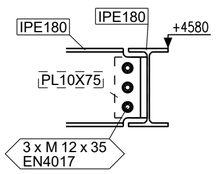


D4 - D4
1:10

SPLOSNE OPOMBE:
- nacrt glej skupaj z nacrtom arhitekture ter drugimi nacrti ki sestavljajo projekt.
- vse mere je potrebno preveriti na gradbiscu samem ter skupaj z ostalimi nacrti.
- izbrani izdelovalec konstrukcije mora izdelati delavniske nacrte skupaj z vsemi detajli ter jih poslati projektantu v pregled.
- v primeru kakrsnih koli odstopanj ali nejasnosti je potrebno o tem obvestiti projektanta, ki bo podal nadalnja navodila
- jekelena konstrukcija spada v razred EXC2 skladno s SIST EN 1090-2
- material jeklene konstrukcije S355J2 (profili in plocevine)

| Mark | Revision | Creat. | Date | Check. | Appr. |
|---|---|---|---|---|---|
| | | | | | |

| | |
|---|---|
| District/village / Block/estate / Building lot | Building permit code |
| Building action | Drawing category / Running number |
| Construction site and address: SEVEROZAHODNA POKRITA TRIBUNA S POMOZNIMI PROSTORI NA OBMOCJU STADIONA FAZANARIJA | Content of drawing: Tloris Etaže; Scale: 1:10, 1:100 |
| RAZPON d.o.o., Tehnološki park 20, 1000 Ljubljana, tel. | |
| Drawn by: Jan Krstic; Designed by: mag. Igor Gorup | Drawing type: PZI; Project number: P02/2025 |
| Date: Junij 2025; Approved by: Andrej Kalamar | Drawing number: D5; Revision |

Tekla Structures

PLAN +10098
1:100

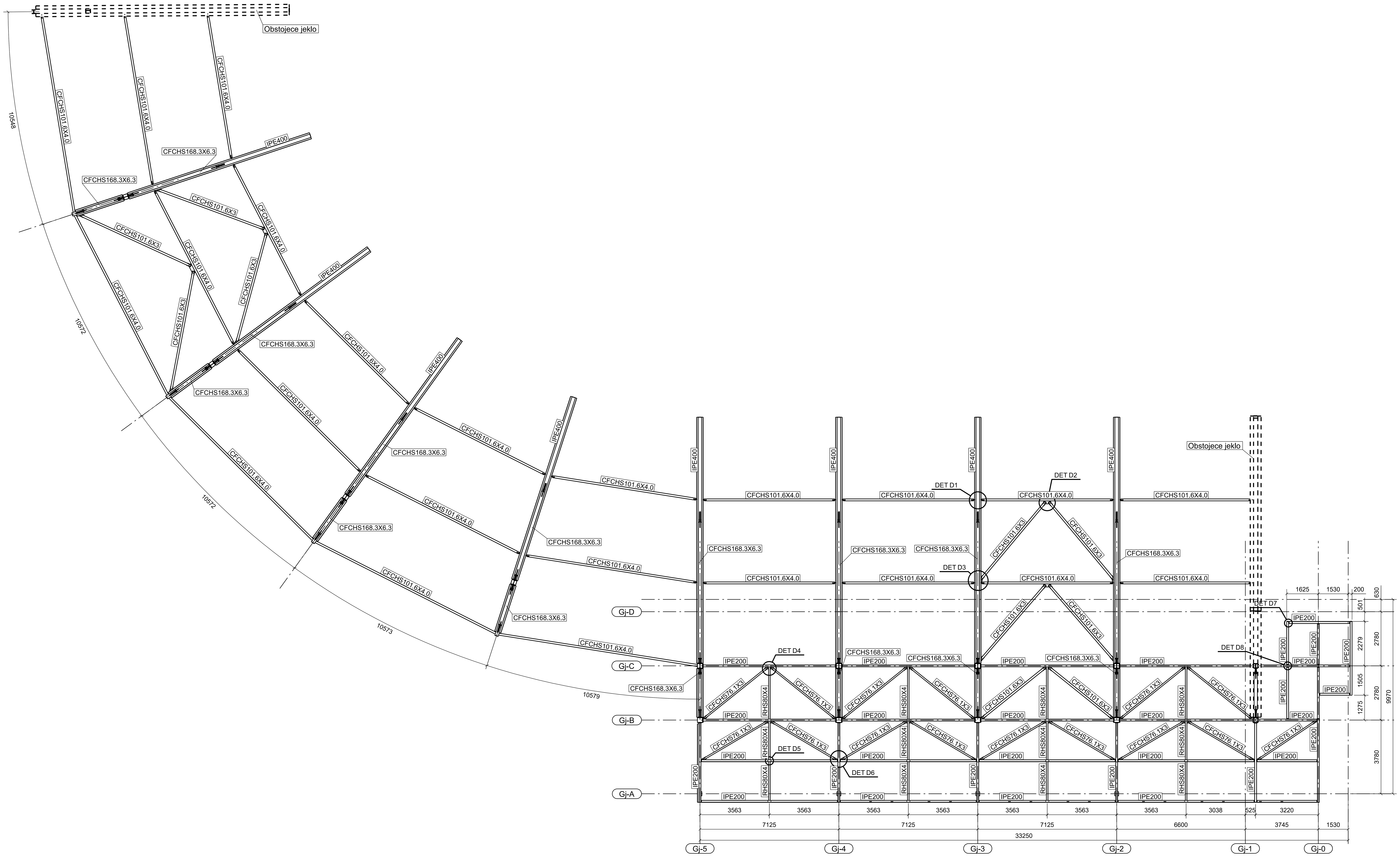


SPLOSNE OPOMBE:
- nacrt glej skupaj z nacrtom arhitekture ter drugimi nacrti ki sestavljajo projekt.
- vse mere je potrebno preveriti na gradbiscu samem ter skupaj z ostalimi nacrti.
- izbrani izdelovalec konstrukcije mora izdelati delavniske nacrte skupaj z vsemi detajli ter jih poslati projektantu v pregled.
- v primeru kakrsnih koli odstopanj ali nejasnosti je potrebno o tem obvestiti projektanta, ki bo podal nadalnja navodila
- jekelena konstrukcija spada v razred EXC2 skladno s SIST EN 1090-2
- material jeklene konstrukcije S355J2 (profili in plocevine)

| Mark | Revision | Creat. | Date | Check. | Appr. |
|---|---|---|---|---|---|

| | | | |
|---|---|---|---|
| District/village | Block/estate | Building lot | Building permit code |
| Building action | | | Drawing category / Running number |
| Construction site and address: SEVEROZAHODNA POKRITA TRIBUNA S POMOZNIMI PROSTORI NA OBMOCJU STADIONA FAZANARIJA | | Content of drawing: Tloris Strehe | Scale: 1:10 1:100 |
| RAZPON d.o.o. Tehnološki park 20, 1000 Ljubljana tel. | | | |
| Drawn by: Jan Krstic | Designed by: mag. Igor Gorup | Drawing type: PZI | Project number: P02/2025 |
| Date: Junij 2025 | Approved by: Andrej Kalamar | Drawing number: D6 | Revision |

Tekla Structures

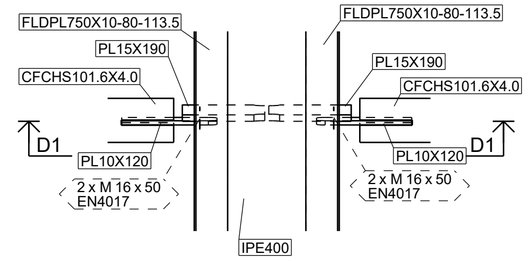


DETAIL D1
1:10

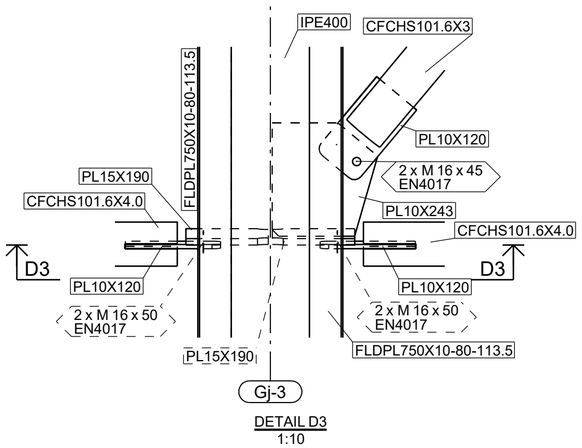


DETAIL D3
1:10

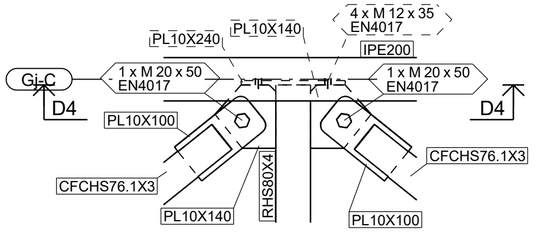


DETAIL D4
1:10

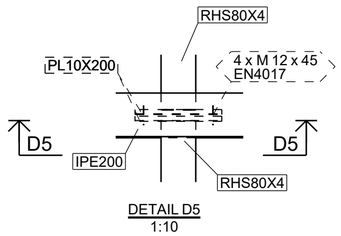


DETAIL D5
1:10

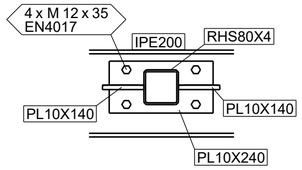


D4 - D4
1:10

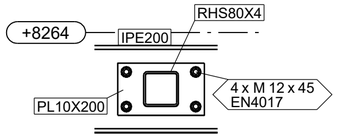


D5 - D5
1:10

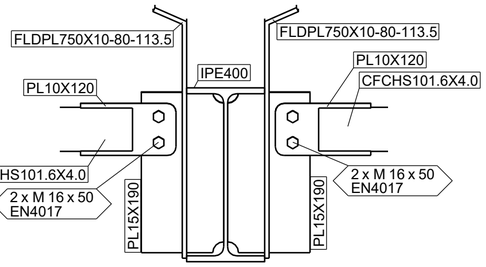


D1 - D1
1:10

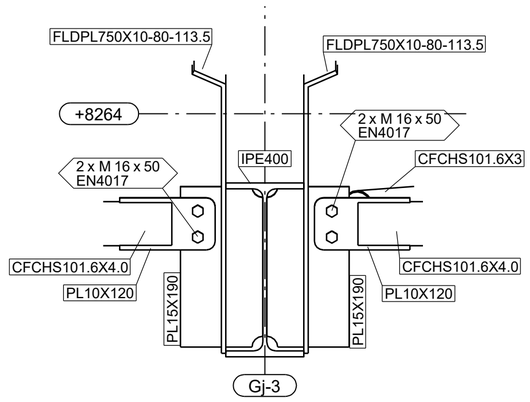


D3 - D3
1:10

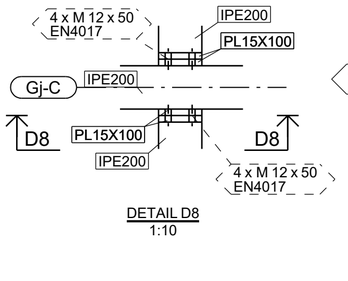


DETAIL D8
1:10

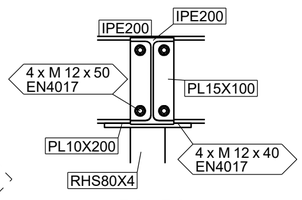


D8 - D8
1:10

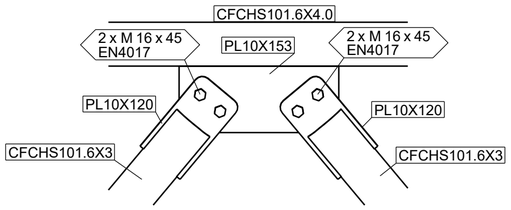


DETAIL D2
1:10

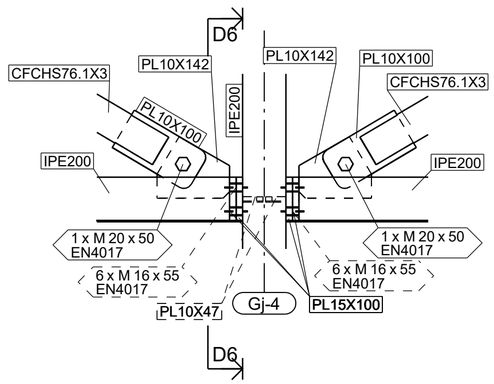


DETAIL D6
1:10

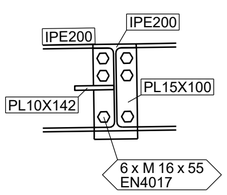


D6 - D6
1:10

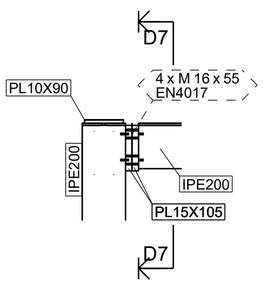


DETAIL D7
1:10

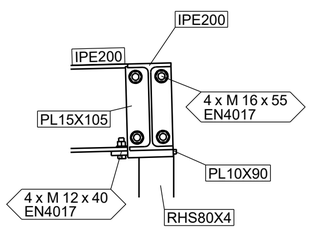


D7 - D7
1:10

| Mark | Revision | Creat. | Date | Check. | Appr. |
|---|---|---|---|---|---|
| | | | | | |

| | |
|---|---|
| District/village / Block/estate / Building lot | Building permit code |
| Building action | Drawing category / Running number |
| Construction site and address<br>SEVEROZAHODNA POKRITA TRIBUNA S POMOZNIMI PROSTORI NA OBMOCJU STADIONA FAZANARIJA | Content of drawing<br>Tloris Strehe - Detajli<br>Scale 1:10 1:100 |
| RAZPON d.o.o.<br>Tehnološki park 20,<br>1000 Ljubljana<br>tel. | |
| Drawn by: Jan Krstic / Designed by: mag. Igor Gorup / Drawing type: PZI / Project number: P02/2025 | |
| Date: Junij 2025 / Approved by: Andrej Kalamar / Drawing number: D7 / Revision | |

Tekla Structures

GRID Gj-0
1:50

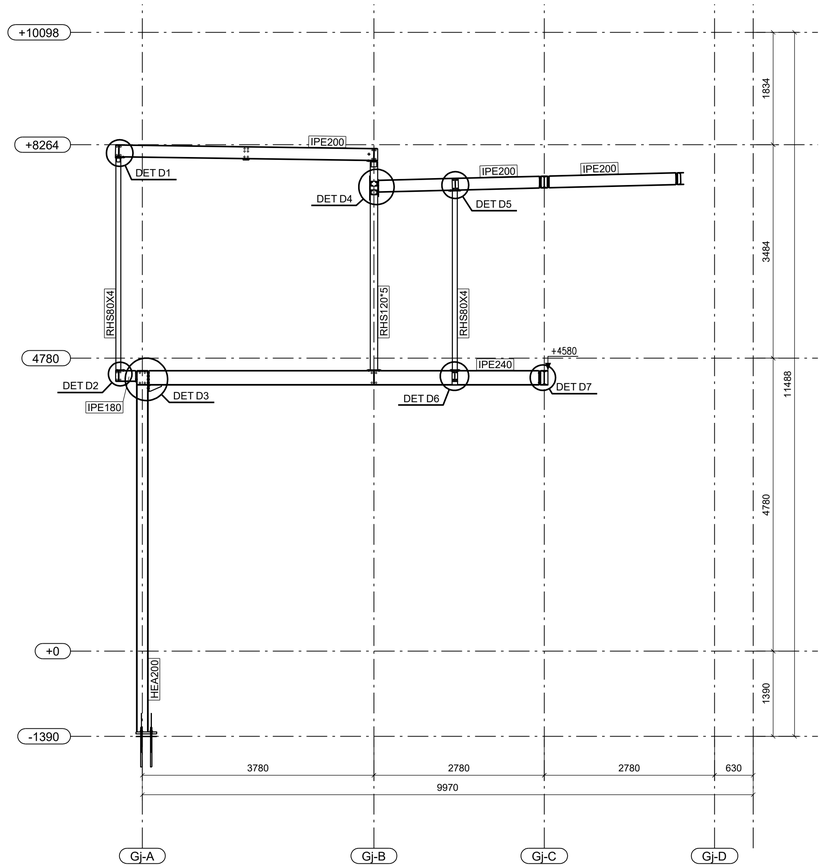


GRID Gj-1
1:50

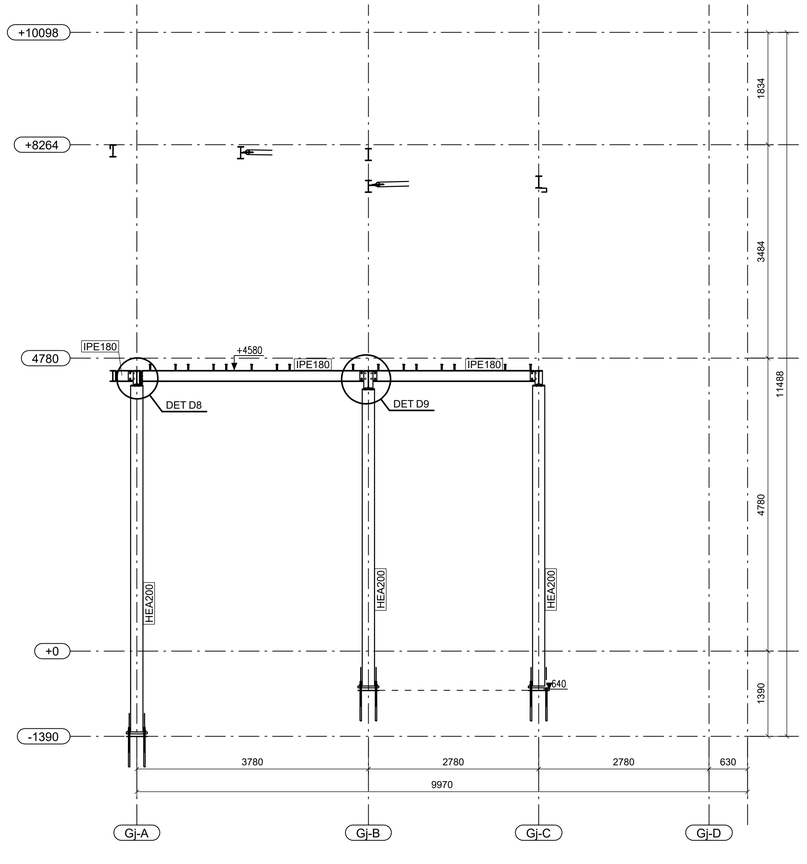


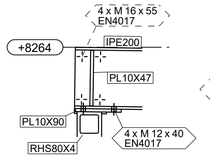


DETAIL D1
1:10

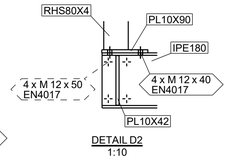


DETAIL D2
1:10

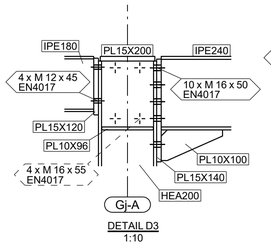


DETAIL D3
1:10

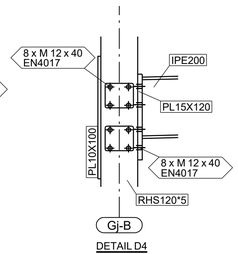


DETAIL D4
1:10

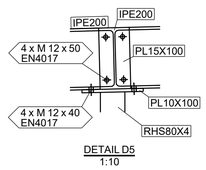


DETAIL D5
1:10

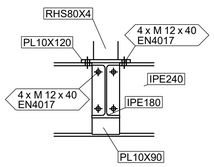


DETAIL D6
1:10

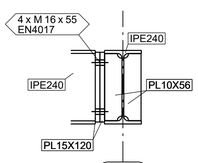


DETAIL D7
1:10

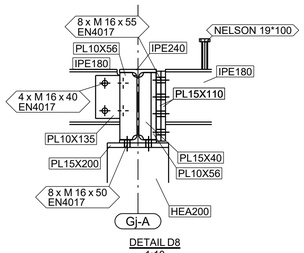


DETAIL D8
1:10

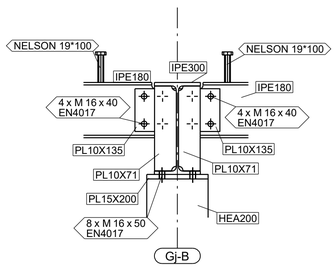


DETAIL D9
1:10

SPLOSNE OPOMBE:
- nacrt glej skupaj z nacrtom arhitekture ter drugimi nacrti ki sestavljajo projekt.
- vse mere je potrebno preveriti na gradbiscu samem ter skupaj z ostalimi nacrti.
- izbrani izdelovalec konstrukcije mora izdelati delavniske nacrte skupaj z vsemi detajli ter jih poslati projektantu v pregled.
- v primeru kakrsnih koli odstopanj ali nejasnosti je potrebno o tem obvestiti projektanta, ki bo podal nadalnja navodila
- jekelena konstrukcija spada v razred EXC2 skladno s SIST EN 1090-2
- material jeklene konstrukcije S355J2 (profili in plocevine)

| Mark | Revision | Creat. | Date | Check. | Appr. |
|---|---|---|---|---|---|
| | | | | | |

| | | | |
|---|---|---|---|
| District/village | Block/estate | Building lot | Building permit code |
| Building action | | | Drawing category / Running number |
| Construction site and address: SEVEROZAHODNA POKRITA TRIBUNA S POMOZNIMI PROSTORI NA OBMOCJU STADIONA FAZANARIJA | | | Content of drawing: Prerez v osi Gj-0; Prerez v osi Gj-1 / Scale: 1:10; 1:50 |
| RAZPON d.o.o. Tehnološki park 20, 1000 Ljubljana tel.: | | | |
| Drawn by: Jan Krstic | Designed by: mag. Igor Gorup | Drawing type: PZI | Project number: P02/2025 |
| Date: Junij 2025 | Approved by: Andrej Kalamar | Drawing number: D8 | Revision |

Tekla Structures

GRID Gj-3
1:50

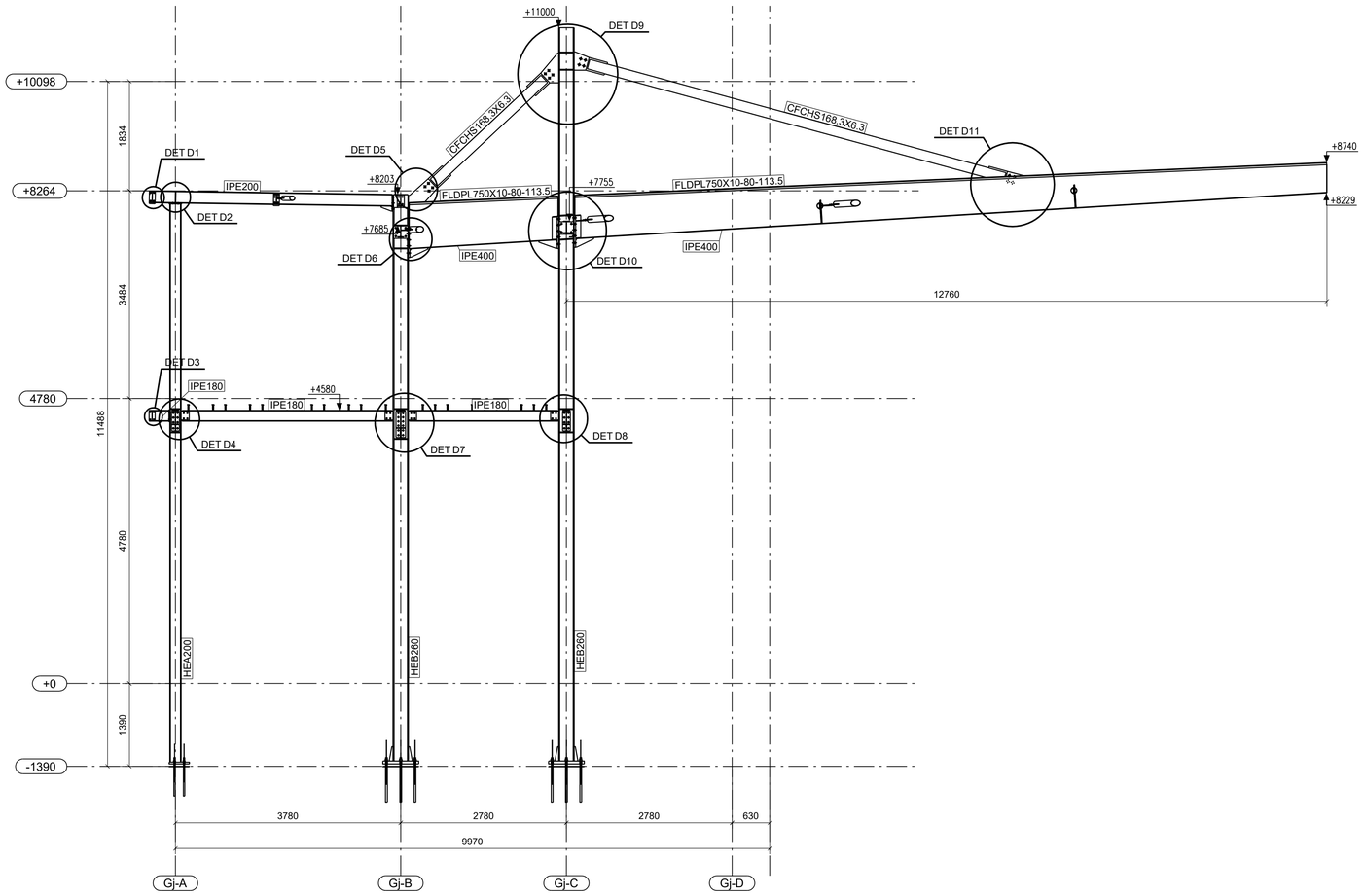


GRID Gj-7
1:50

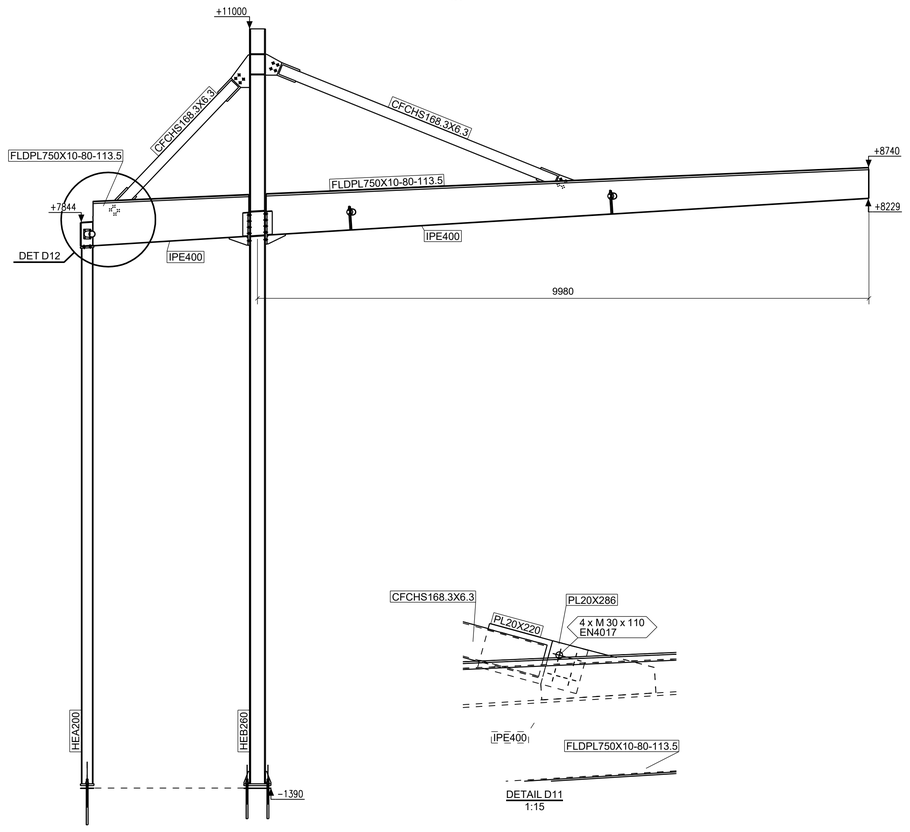





DETAIL D11
1:15

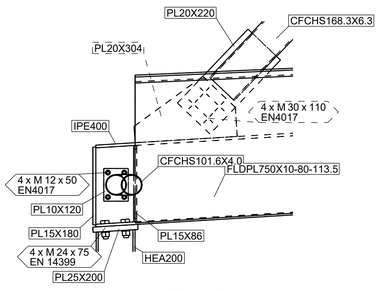


DETAIL D12
1:15

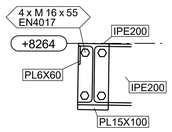


DETAIL D1
1:10

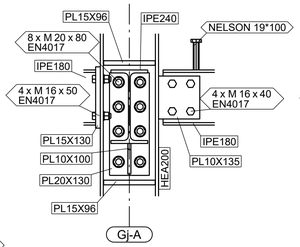


DETAIL D4
1:10

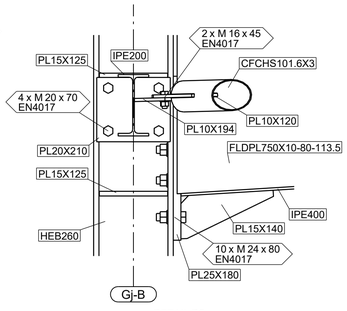


DETAIL D6
1:10

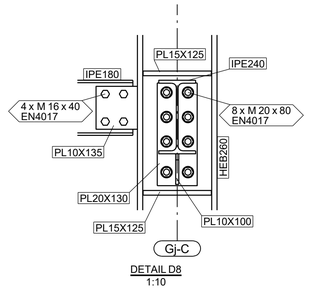


DETAIL D8
1:10

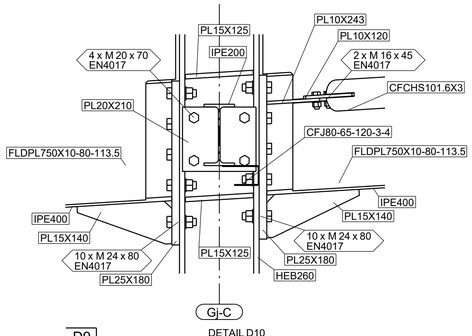


DETAIL D10
1:10

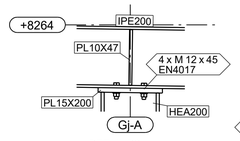


DETAIL D2
1:10

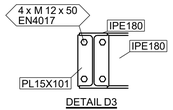


DETAIL D3
1:10

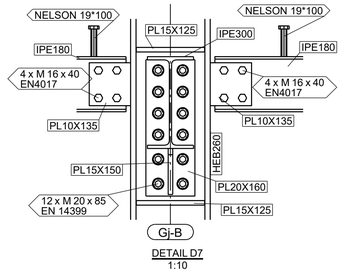


DETAIL D7
1:10

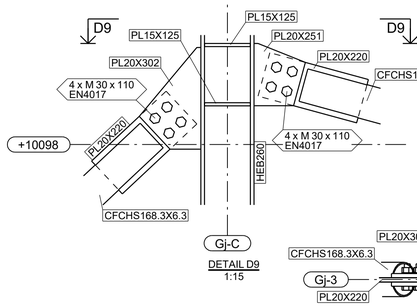


DETAIL D9
1:15

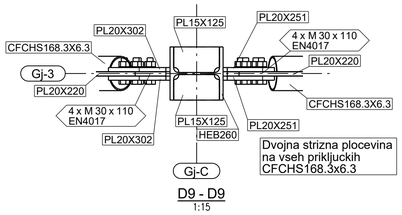


D9 - D9
1:15

Dvojna strizna plocevina na vseh prikljuckih CFCHS168.3x6.3

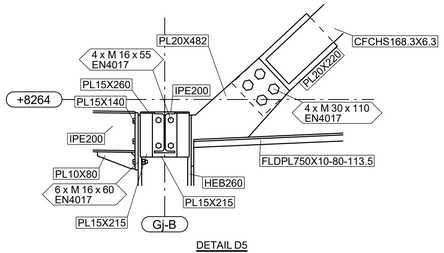


DETAIL D5
1:15

SPLOSNE OPOMBE:
- nacrt glej skupaj z nacrtom arhitekture ter drugimi nacrti ki sestavljajo projekt.
- vse mere je potrebno preveriti na gradbiscu samem ter skupaj z ostalimi nacrti.
- izbrani izdelovalec konstrukcije mora izdelati delavniske nacrte skupaj z vsemi detajli ter jih poslati projektantu v pregled.
- v primeru kakrsnih koli odstopanj ali nejasnosti je potrebno o tem obvestiti projektanta, ki bo podal nadalnja navodila
- jekelena konstrukcija spada v razred EXC2 skladno s SIST EN 1090-2
- material jeklene konstrukcije S355J2 (profili in plocevine)

| Mark | Revision | Creat. | Date | Check. | Appr. |
|---|---|---|---|---|---|

| | | |
|---|---|---|
| District/village / Block/estate / Building lot | | Building permit code |
| Building action | | Drawing category / Running number |
| Construction site and address: SEVEROZAHODNA POKRITA TRIBUNA S POMOZNIMI PROSTORI NA OBMOCJU STADIONA FAZANARIJA | Content of drawing: Prerez v osi Gj-3; Prerez v osi Gj-7 | Scale: 1:10; 1:15; 1:50 |
| RAZPON d.o.o. Tehnološki park 20, 1000 Ljubljana tel. | | |
| Drawn by: Jan Krstic | Designed by: mag. Igor Gorup | Drawing type: PZI; Project number: P02/2025 |
| Date: Junij 2025 | Approved by: Andrej Kalamar | Drawing number: D9; Revision |

Tekla Structures

GRID Gj-A
1:50

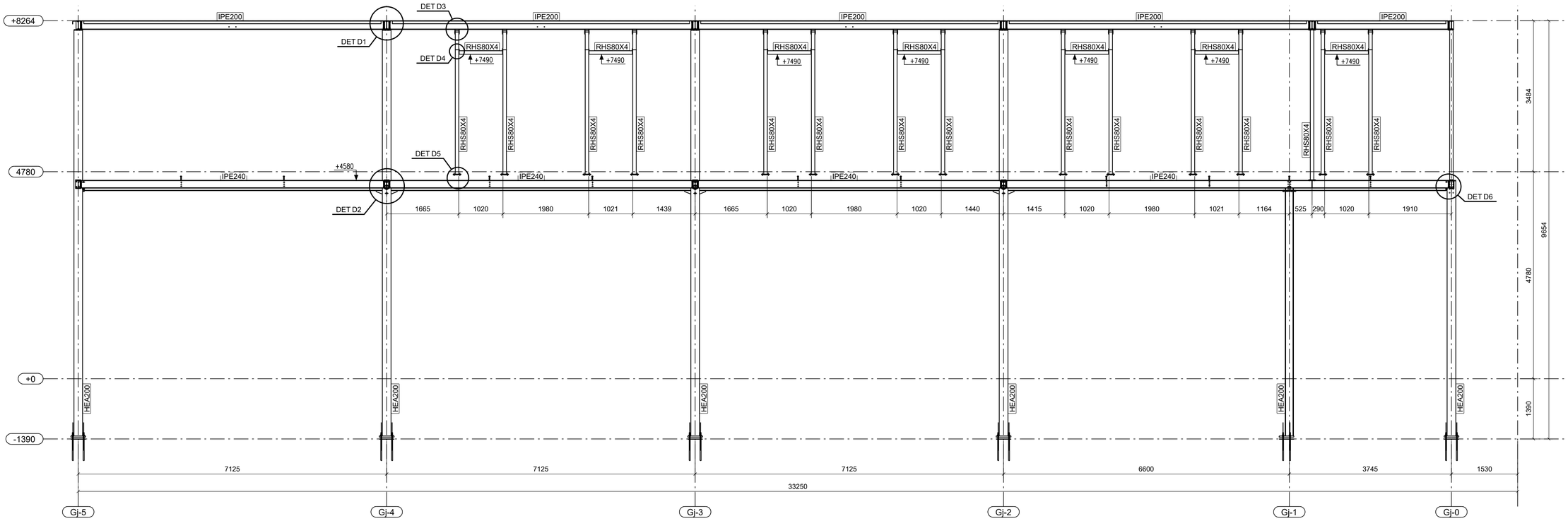


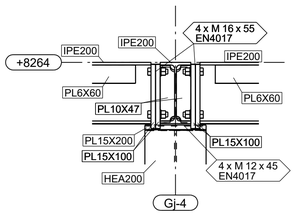


DETAIL D1
1:10

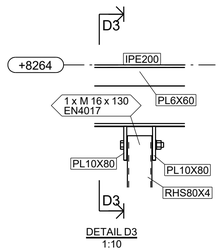


DETAIL D3
1:10

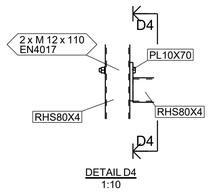


DETAIL D4
1:10

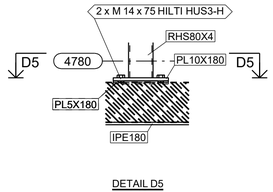


DETAIL D5
1:10

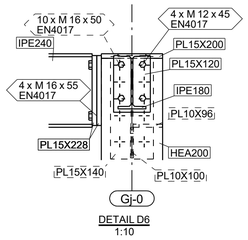


DETAIL D6
1:10

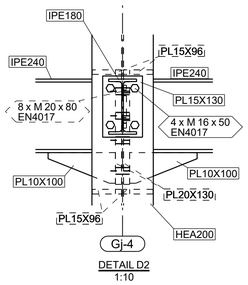


DETAIL D2
1:10

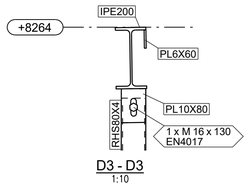


D3 - D3
1:10

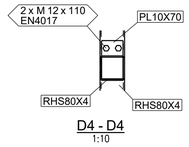


D4 - D4
1:10

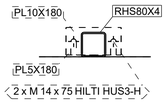


D5 - D5
1:10

SPLOSNE OPOMBE:
- nacrt glej skupaj z nacrtom arhitekture ter drugimi nacrti ki sestavljajo projekt.
- vse mere je potrebno preveriti na gradbiscu samem ter skupaj z ostalimi nacrti.
- izbrani izdelovalec konstrukcije mora izdelati delavniske nacrte skupaj z vsemi detajli ter jih poslati projektantu v pregled.
- v primeru kakrsnih koli odstopanj ali nejasnosti je potrebno o tem obvestiti projektanta, ki bo podal nadalnja navodila
- jekelena konstrukcija spada v razred EXC2 skladno s SIST EN 1090-2
- material jeklene konstrukcije S355J2 (profili in plocevine)

| Mark | Revision | Creat. | Date | Check. | Appr. |
|---|---|---|---|---|---|

| | | |
|---|---|---|
| District/village / Block/estate / Building lot | | Building permit code |
| Building action | | Drawing category / Running number |
| Construction site and address: SEVEROZAHODNA POKRITA TRIBUNA S POMOZNIMI PROSTORI NA OBMOCJU STADIONA FAZANARIJA | Content of drawing: Prerez v osi Gj-A | Scale: 1:10, 1:50 |
| RAZPON d.o.o., Tehnološki park 20, 1000 Ljubljana, tel. | | |
| Drawn by: Jan Krstic | Designed by: mag. Igor Gorup | Drawing type: PZI / Project number: P02/2025 |
| Date: Junij 2025 | Approved by: Andrej Kalamar | Drawing number: D10 / Revision |

Tekla Structures

GRID Gj-B
1:50

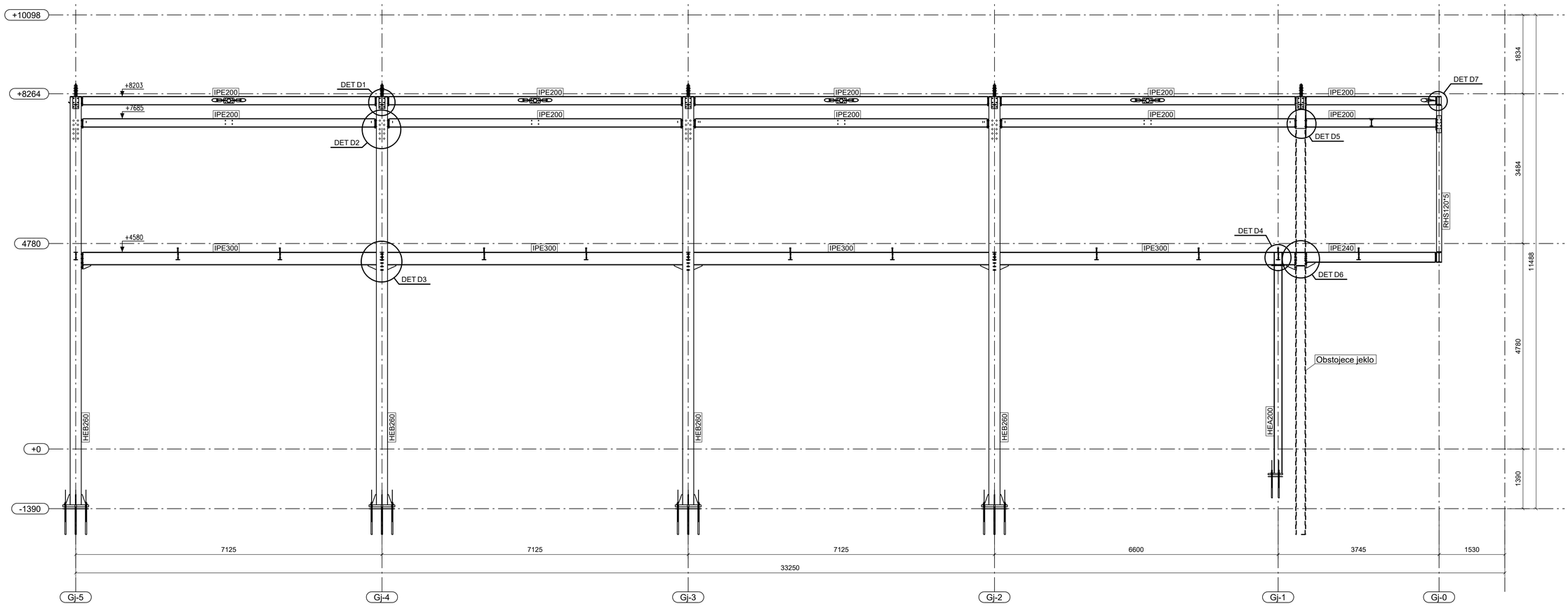


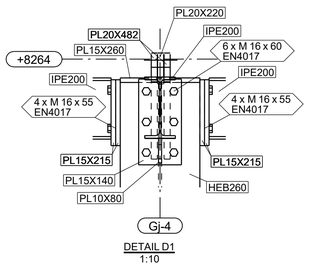


DETAIL D1
1:10

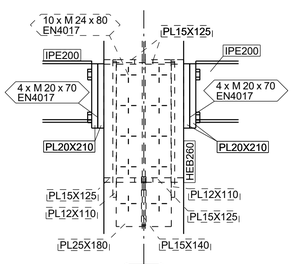


DETAIL D2
1:10

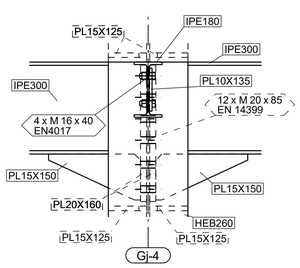


DETAIL D3
1:10

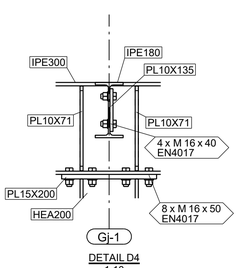


DETAIL D4
1:10

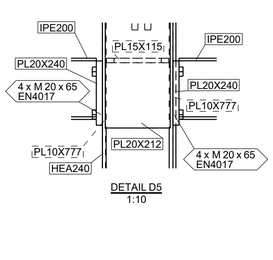


DETAIL D5
1:10

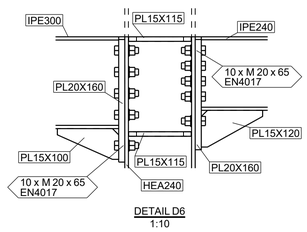


DETAIL D6
1:10

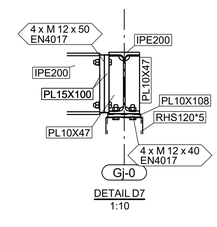


DETAIL D7
1:10

SPLOSNE OPOMBE:
- nacrt glej skupaj z nacrtom arhitekture ter drugimi nacrti ki sestavljajo projekt.
- vse mere je potrebno preveriti na gradbiscu samem ter skupaj z ostalimi nacrti.
- izbrani izdelovalec konstrukcije mora izdelati delavniske nacrte skupaj z vsemi detajli ter jih poslati projektantu v pregled.
- v primeru kakrsnih koli odstopanj ali nejasnosti je potrebno o tem obvestiti projektanta, ki bo podal nadalnja navodila
- jekelena konstrukcija spada v razred EXC2 skladno s SIST EN 1090-2
- material jeklene konstrukcije S355J2 (profili in plocevine)

| Mark | Revision | Creat. | Date | Check. | Appr. |
|---|---|---|---|---|---|

| | | | |
|---|---|---|---|
| District/village / Block/estate / Building lot | | Building permit code | |
| Building action | | Drawing category | Running number |
| Construction site and address | SEVEROZAHODNA POKRITA TRIBUNA S POMOZNIMI PROSTORI NA OBMOCJU STADIONA FAZANARIJA | Content of drawing | Prerez v osi Gj-B |
| | | Scale | 1:10<br>1:50 |
| RAZPON d.o.o. | RAZPON d.o.o.<br>Tehnološki park 20,<br>1000 Ljubljana<br>tel. | | |
| Drawn by | Jan Krstic | Designed by | mag. Igor Gorup |
| Drawing type | PZI | Project number | P02/2025 |
| Date | Junij 2025 | Approved by | Andrej Kalamar |
| Drawing number | D11 | Revision | |

Tekla Structures

GRID Gj-C
1:50

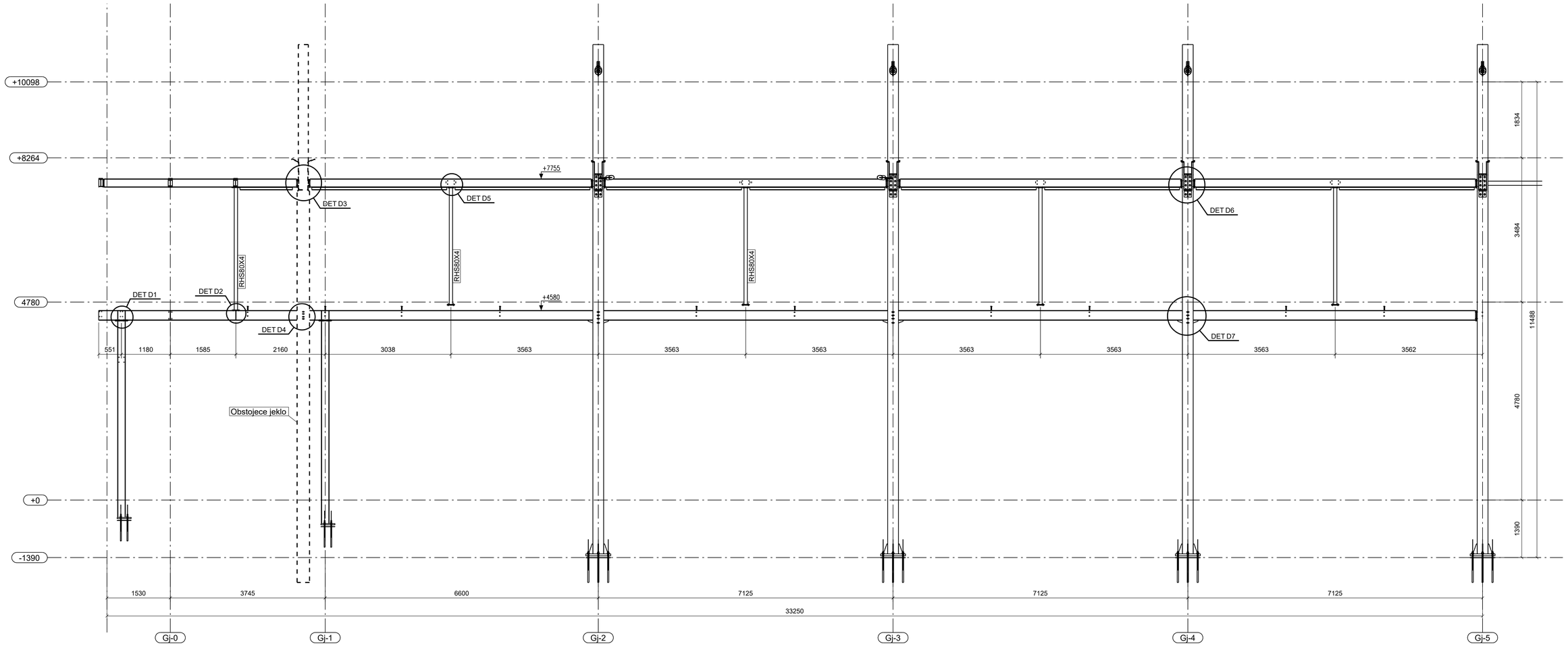


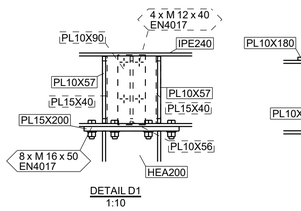


DETAIL D1
1:10

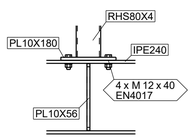


DETAIL D2
1:10

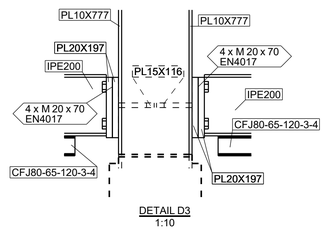


DETAIL D3
1:10

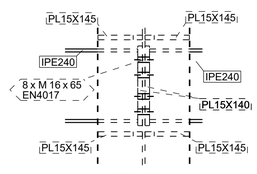


DETAIL D4
1:10

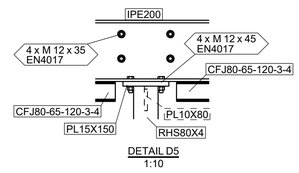


DETAIL D5
1:10

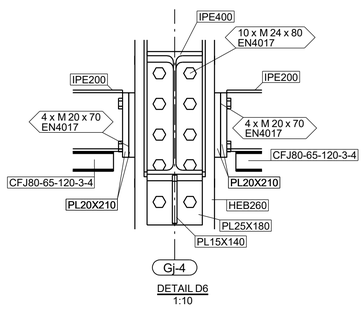


DETAIL D6
1:10

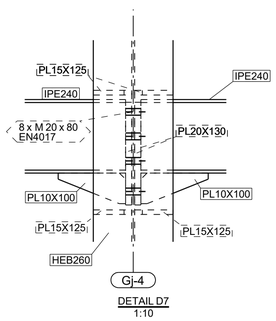


DETAIL D7
1:10

SPLOSNE OPOMBE:
- nacrt glej skupaj z nacrtom arhitekture ter drugimi nacrti ki sestavljajo projekt.
- vse mere je potrebno preveriti na gradbiscu samem ter skupaj z ostalimi nacrti.
- izbrani izdelovalec konstrukcije mora izdelati delavniske nacrte skupaj z vsemi detajli ter jih poslati projektantu v pregled.
- v primeru kakrsnih koli odstopanj ali nejasnosti je potrebno o tem obvestiti projektanta, ki bo podal nadalnja navodila
- jekelena konstrukcija spada v razred EXC2 skladno s SIST EN 1090-2
- material jeklene konstrukcije S355J2 (profili in plocevine)

| Mark | Revision | Creat. | Date | Check. | Appr. |
|---|---|---|---|---|---|
| | | | | | |

| | | | |
|---|---|---|---|
| District/village | Block/estate | Building lot | Building permit code |
| Building action | | | Drawing category / Running number |
| Construction site and address: SEVEROZAHODNA POKRITA TRIBUNA S POMOZNIMI PROSTORI NA OBMOCJU STADIONA FAZANARIJA | | | Content of drawing: Prerez v osi Gj-C; Scale: 1:10, 1:50 |
| RAZPON d.o.o. Tehnološki park 20, 1000 Ljubljana tel.: | | | |
| Drawn by: Jan Krstic | Designed by: mag. Igor Gorup | Drawing type: PZI | Project number: P02/2025 |
| Date: Junij 2025 | Approved by: Andrej Kalamar | Drawing number: D12 | Revision |

Tekla Structures

PLAN +4780
1:50

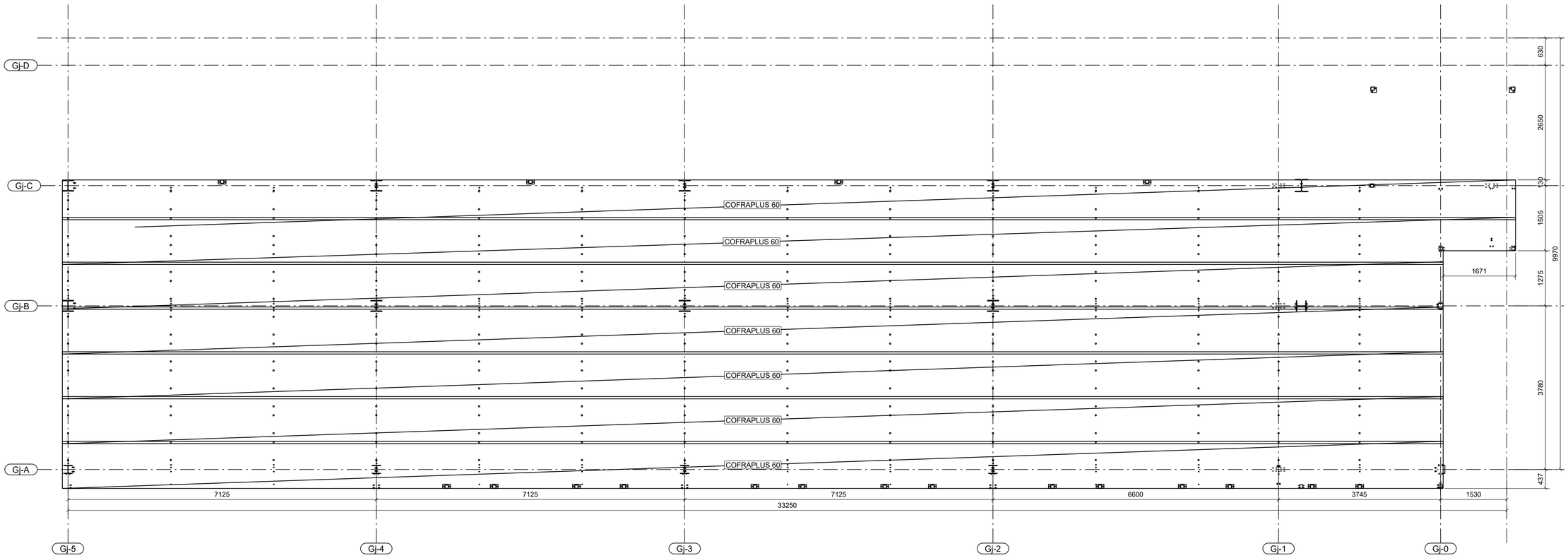


SPLOSNE OPOMBE:
- nacrt glej skupaj z nacrtom arhitekture ter drugimi nacrti ki sestavljajo projekt.
- vse mere je potrebno preveriti na gradbiscu samem ter skupaj z ostalimi nacrti.
- izbrani izdelovalec konstrukcije mora izdelati delavniske nacrte skupaj z vsemi detajli ter jih poslati projektantu v pregled.
- v primeru kakrsnih koli odstopanj ali nejasnosti je potrebno o tem obvestiti projektanta, ki bo podal nadalnja navodila
- jekelena konstrukcija spada v razred EXC2 skladno s SIST EN 1090-2
- material jeklene konstrukcije S355J2 (profili in plocevine)

| Mark | Revision | Creat. | Date | Check. | Appr. |
|---|---|---|---|---|---|

| | |
|---|---|
| District/village / Block/estate / Building lot | Building permit code |
| Building action | Drawing category / Running number |
| Construction site and address: SEVEROZAHODNA POKRITA TRIBUNA S POMOZNIMI PROSTORI NA OBMOCJU STADIONA FAZANARIJA | Content of drawing: Etazna plosca - Plocevina; Scale: 1:50 |
| RAZPON d.o.o. Tehnološki park 20, 1000 Ljubljana tel. | |
| Drawn by: Jan Krstic; Designed by: mag. Igor Gorup | Drawing type: PZI; Project number: P02/2025 |
| Date: Junij 2025; Approved by: Andrej Kalamar | Drawing number: D13; Revision |

Tekla Structures

Etazna plosca -Zgornja armatura
1:50

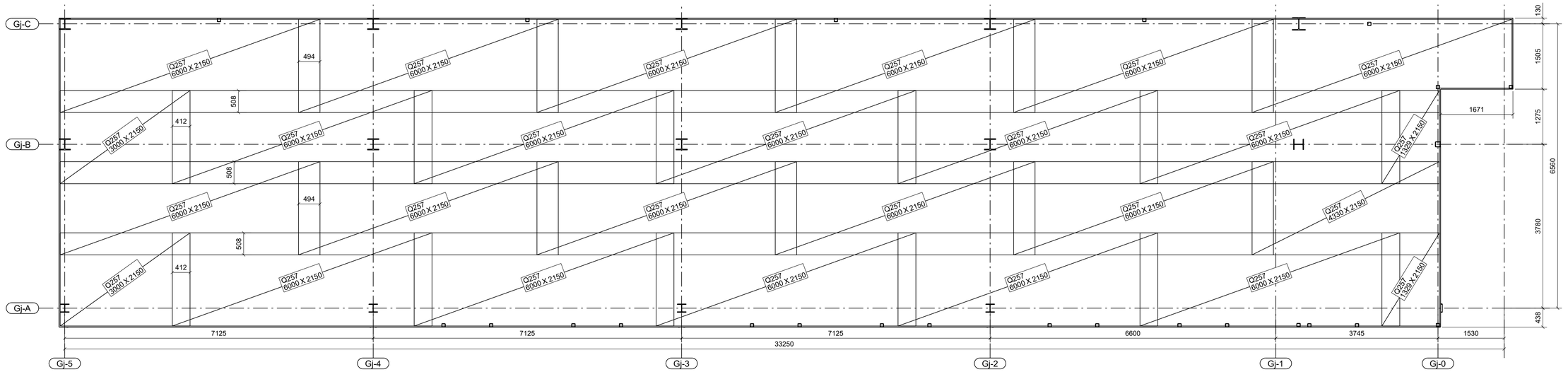


Etazna plosca Spodnja armatura
1:50

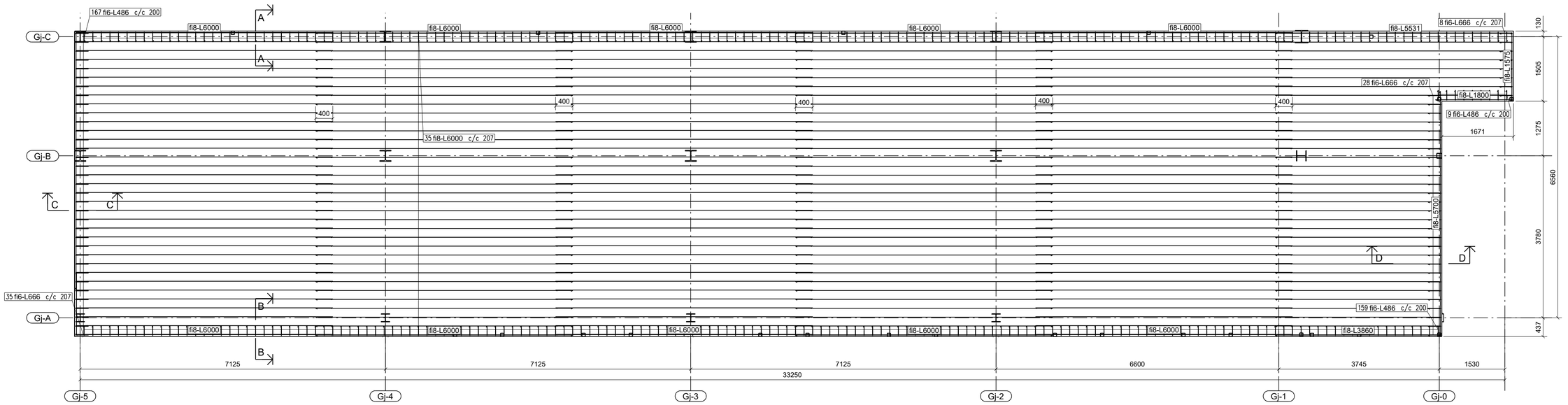


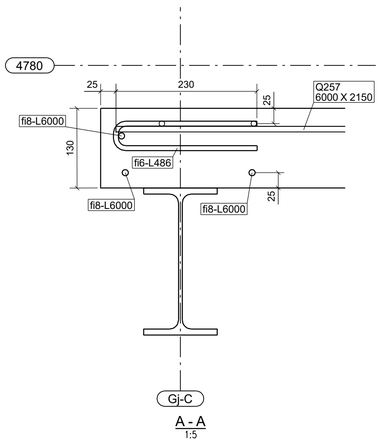


A - A
1:5

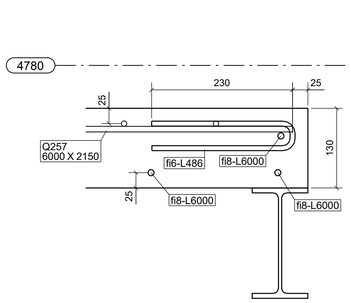


B - B
1:5

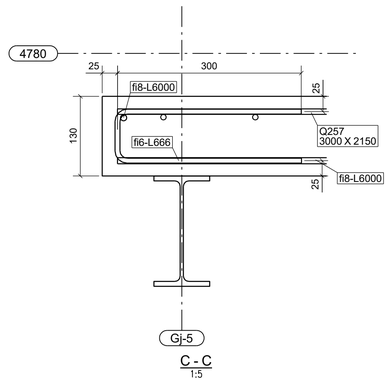


C - C
1:5

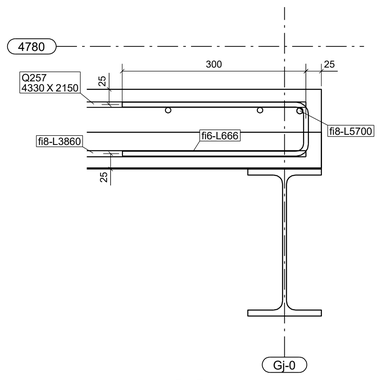


D - D
1:5

SPLOSNE OPOMBE:
- nacrt glej skupaj z nacrtom arhitekture ter drugimi nacrti ki sestavljajo projekt.
- vse mere je potrebno preveriti na gradbiscu samem ter skupaj z ostalimi nacrti.
- izbrani izdelovalec konstrukcije mora izdelati delavniske nacrte skupaj z vsemi detajli ter jih poslati projektantu v pregled.
- v primeru kakrsnih koli odstopanj ali nejasnosti je potrebno o tem obvestiti projektanta, ki bo podal nadalnja navodila
- jekelena konstrukcija spada v razred EXC2 skladno s SIST EN 1090-2
- material jeklene konstrukcije S355J2 (profili in plocevine)

| Mark | Revision | Creat. | Date | Check. | Appr. |
|---|---|---|---|---|---|
| | | | | | |

| | | | |
|---|---|---|---|
| District/village | Block/estate / Building lot | Building permit code | |
| Building action | | Drawing category | Running number |
| Construction site and address: SEVEROZAHODNA POKRITA TRIBUNA S POMOZNIMI PROSTORI NA OBMOCJU STADIONA FAZANARIJA | | Content of drawing: Etazna plosca - Armatura | Scale: 1:5, 1:50 |
| RAZPON d.o.o. Tehnološki park 20, 1000 Ljubljana tel.: | | | |
| Drawn by: Jan Krstic | Designed by: mag. Igor Gorup | Drawing type: PZI | Project number: P02/2025 |
| Date: Junij 2025 | Approved by: Andrej Kalamar | Drawing number: D14 | Revision |

Tekla Structures

PLAN +10098
1:50

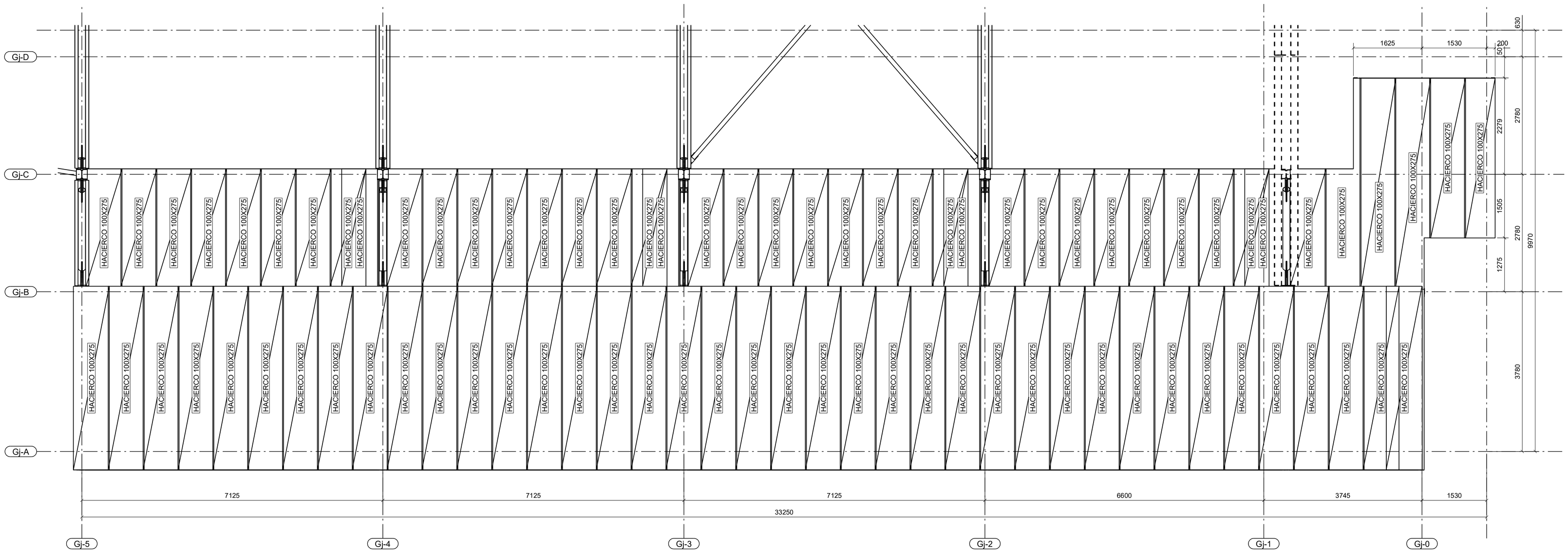


SPLOSNE OPOMBE:
- nacrt glej skupaj z nacrtom arhitekture ter drugimi nacrti ki sestavljajo projekt.
- vse mere je potrebno preveriti na gradbiscu samem ter skupaj z ostalimi nacrti.
- izbrani izdelovalec konstrukcije mora izdelati delavniske nacrte skupaj z vsemi detajli ter jih poslati projektantu v pregled.
- v primeru kakrsnih koli odstopanj ali nejasnosti je potrebno o tem obvestiti projektanta, ki bo podal nadalnja navodila
- jekelena konstrukcija spada v razred EXC2 skladno s SIST EN 1090-2
- material jeklene konstrukcije S355J2 (profili in plocevine)

| Mark | Revision | Creat. | Date | Check. | Appr. |
|---|---|---|---|---|---|
| | | | | | |

| | |
|---|---|
| District/village / Block/estate / Building lot | Building permit code |
| Building action | Drawing category / Running number |
| Construction site and address: SEVEROZAHODNA POKRITA TRIBUNA S POMOZNIMI PROSTORI NA OBMOCJU STADIONA FAZANARIJA | Content of drawing: Tloris Stresne plocevine; Scale: 1:50 |
| RAZPON d.o.o., Tehnološki park 20, 1000 Ljubljana, tel.: | |
| Drawn by: Jan Krstic | Designed by: mag. Igor Gorup |
| Date: Junij 2025 | Approved by: Andrej Kalamar |
| Drawing type: PZI; Project number: P02/2025 | Drawing number: D15; Revision |

Tekla Structures

RAZPON d.o.o.
Tehnološki park 20,
1000 Ljubljana

www.razpon.si

List contents: Jeklena Konstrukcija
Project name: SEVEROZAHODNA POKI
Project address: POMOZNIMI PROSTORI
STADIONA FAZANARIJA
Project number: P02/2025
Document number:

Author: Jan Krstič
Date: 27.06.2025
Revision:
Revision date:
Revision by:

| Profile | Material | Number | Length | Area | Weight |
|---|---|---|---|---|---|
| CFCHS76.1X3 | S235J2 | 1 | 3331 | 0,80 | 18,0 |
| CFCHS76.1X3 | S235J2 | 8 | 3643 | 0,87 | 19,7 |
| CFCHS76.1X3 | S235J2 | 6 | 3983 | 0,95 | 21,5 |
| **Sub total, CFCHS76.1X3** | | | **56377** | **13,5** | **305** |
| CFCHS101.6X3 | S235J2 | 2 | 3963 | 1,26 | 28,9 |
| CFCHS101.6X3 | S235J2 | 2 | 4885 | 1,56 | 35,6 |
| CFCHS101.6X3 | S235J2 | 2 | 4989 | 1,59 | 36,4 |
| CFCHS101.6X3 | S235J2 | 1 | 5622 | 1,79 | 41,0 |
| CFCHS101.6X3 | S235J2 | 1 | 5641 | 1,80 | 41,1 |
| CFCHS101.6X3 | S235J2 | 1 | 6054 | 1,93 | 44,2 |
| CFCHS101.6X3 | S235J2 | 1 | 6056 | 1,93 | 44,2 |
| **Sub total, CFCHS101.6X3** | | | **51045** | **16,3** | **372** |
| CFCHS101.6X4.0 | S355J2 | 2 | 6681 | 2,13 | 64,3 |
| CFCHS101.6X4.0 | S355J2 | 6 | 6696 | 2,14 | 64,4 |
| CFCHS101.6X4.0 | S355J2 | 1 | 7406 | 2,36 | 71,3 |
| CFCHS101.6X4.0 | S355J2 | 4 | 7443 | 2,37 | 71,6 |
| CFCHS101.6X4.0 | S355J2 | 1 | 8733 | 2,79 | 84,0 |
| CFCHS101.6X4.0 | S355J2 | 4 | 8770 | 2,80 | 84,4 |
| CFCHS101.6X4.0 | S355J2 | 1 | 10272 | 3,28 | 98,9 |
| CFCHS101.6X4.0 | S355J2 | 1 | 10517 | 3,35 | 101,2 |
| CFCHS101.6X4.0 | S355J2 | 3 | 10518 | 3,36 | 101,2 |
| **Sub total, CFCHS101.6X4.0** | | | **186872** | **59,6** | **1799** |
| CFCHS168.3X6.3 | S235J2 | 4 | 2547 | 1,35 | 64,1 |
| CFCHS168.3X6.3 | S235J2 | 1 | 2554 | 1,35 | 64,3 |
| CFCHS168.3X6.3 | S235J2 | 4 | 2742 | 1,45 | 69,0 |
| CFCHS168.3X6.3 | S235J2 | 4 | 4843 | 2,56 | 121,9 |
| CFCHS168.3X6.3 | S235J2 | 4 | 7235 | 3,83 | 182,1 |
| **Sub total, CFCHS168.3X6.3** | | | **72019** | **38,1** | **1813** |
| CFJ80-65-120-3-4 | S235J2 | 1 | 1268 | 0,65 | 7,6 |
| CFJ80-65-120-3-4 | S235J2 | 8 | 3263 | 1,68 | 19,5 |
| **Sub total, CFJ80-65-120-3-4** | | | **27368** | **14,1** | **164** |
| CFL60-100-4-4 | S235J2 | 1 | 4023 | 1,27 | 19,3 |
| **Sub total, CFL60-100-4-4** | | | **4023** | **1,3** | **19** |
| FLDPL750X10-80-113.5 | S355J2 | 8 | 2531 | 3,94 | 152,0 |
| FLDPL750X10-80-113.5 | S355J2 | 8 | 2576 | 3,77 | 145,3 |
| FLDPL750X10-80-113.5 | S355J2 | 8 | 9854 | 12,50 | 481,6 |
| FLDPL750X10-80-113.5 | S355J2 | 8 | 12639 | 16,68 | 643,5 |
| **Sub total, FLDPL750X10-80-113.5** | | | **220800** | **295,1** | **11379** |
| HEA200 | S355J2 | 1 | 4745 | 5,39 | 200,5 |
| HEA200 | S355J2 | 1 | 4835 | 5,49 | 204,3 |
| HEA200 | S355J2 | 1 | 4895 | 5,56 | 206,8 |
| HEA200 | S355J2 | 1 | 5645 | 6,41 | 238,5 |
| HEA200 | S355J2 | 1 | 5885 | 6,69 | 248,7 |
| HEA200 | S355J2 | 4 | 8750 | 9,94 | 369,8 |

RAZPON d.o.o.
Tehnološki park 20,
1000 Ljubljana

www.razpon.si

List contents: Jeklena Konstrukcija
Project name: SEVEROZAHODNA POKI
Project address: POMOZNIMI PROSTORI
STADIONA FAZANARIJA
Project number: P02/2025
Document number:

Author: Jan Krstič
Date: 27.06.2025
Revision:
Revision date:
Revision by:

| Profile | Material | Number | Length | Area | Weight |
|---|---|---|---|---|---|
| HEA200 | S355J2 | 4 | 9364 | 10,64 | 395,7 |
| **Sub total, HEA200** | | | **98462** | **111,9** | **4161** |
| HEB260 | S355J2 | 4 | 9488 | 14,22 | 881,9 |
| HEB260 | S355J2 | 4 | 12300 | 18,44 | 1143,2 |
| HEB260 | S355J2 | 4 | 12320 | 18,47 | 1145,1 |
| **Sub total, HEB260** | | | **136432** | **204,5** | **12681** |
| IPE180 | S355J2 | 1 | 298 | 0,21 | 5,6 |
| IPE180 | S355J2 | 5 | 327 | 0,23 | 6,1 |
| IPE180 | S355J2 | 9 | 356 | 0,25 | 6,7 |
| IPE180 | S355J2 | 2 | 1314 | 0,92 | 24,7 |
| IPE180 | S355J2 | 1 | 1651 | 1,15 | 31,0 |
| IPE180 | S355J2 | 4 | 2490 | 1,74 | 46,7 |
| IPE180 | S355J2 | 9 | 2743 | 1,91 | 51,5 |
| IPE180 | S355J2 | 1 | 2744 | 1,92 | 51,5 |
| IPE180 | S355J2 | 4 | 3525 | 2,46 | 66,1 |
| IPE180 | S355J2 | 1 | 3671 | 2,56 | 68,9 |
| IPE180 | S355J2 | 8 | 3743 | 2,61 | 70,2 |
| IPE180 | S355J2 | 1 | 3744 | 2,61 | 70,2 |
| IPE180 | S355J2 | 3 | 6974 | 4,87 | 130,8 |
| IPE180 | S355J2 | 1 | 10194 | 7,12 | 191,3 |
| **Sub total, IPE180** | | | **129385** | **90,3** | **2428** |
| IPE200 | S355J2 | 1 | 1520 | 1,17 | 34,0 |
| IPE200 | S355J2 | 1 | 2069 | 1,59 | 46,3 |
| IPE200 | S355J2 | 1 | 2199 | 1,69 | 49,2 |
| IPE200 | S355J2 | 1 | 2626 | 2,02 | 58,7 |
| IPE200 | S355J2 | 1 | 2631 | 2,02 | 58,9 |
| IPE200 | S355J2 | 2 | 3010 | 2,31 | 67,3 |
| IPE200 | S355J2 | 2 | 3060 | 2,35 | 68,5 |
| IPE200 | S355J2 | 1 | 3095 | 2,38 | 69,2 |
| IPE200 | S355J2 | 1 | 3780 | 2,90 | 84,6 |
| IPE200 | S355J2 | 1 | 4065 | 3,12 | 91,0 |
| IPE200 | S355J2 | 4 | 4075 | 3,13 | 91,2 |
| IPE200 | S355J2 | 1 | 4280 | 3,29 | 95,8 |
| IPE200 | S355J2 | 1 | 4655 | 3,58 | 104,1 |
| IPE200 | S355J2 | 6 | 6785 | 5,21 | 151,8 |
| IPE200 | S355J2 | 1 | 6800 | 5,22 | 152,1 |
| IPE200 | S355J2 | 3 | 6805 | 5,23 | 152,2 |
| IPE200 | S355J2 | 1 | 6820 | 5,24 | 152,6 |
| IPE200 | S355J2 | 1 | 6835 | 5,25 | 152,9 |
| IPE200 | S355J2 | 8 | 6965 | 5,35 | 155,8 |
| **Sub total, IPE200** | | | **196662** | **151,0** | **4400** |
| IPE240 | S355J2 | 1 | 2995 | 2,76 | 91,9 |
| IPE240 | S355J2 | 1 | 4926 | 4,54 | 151,2 |
| IPE240 | S355J2 | 1 | 6360 | 5,86 | 195,2 |
| IPE240 | S355J2 | 1 | 6930 | 6,39 | 212,7 |
| IPE240 | S355J2 | 1 | 6962 | 6,42 | 213,6 |
| IPE240 | S355J2 | 2 | 7075 | 6,52 | 217,1 |
| IPE240 | S355J2 | 2 | 7079 | 6,53 | 217,2 |
| IPE240 | S355J2 | 1 | 7086 | 6,53 | 217,4 |

RAZPON d.o.o.
Tehnološki park 20,
1000 Ljubljana

www.razpon.si

List contents: Jeklena Konstrukcija
Project name: SEVEROZAHODNA POKI
Project address: POMOZNIMI PROSTORI
STADIONA FAZANARIJA
Project number: P02/2025
Document number:

Author: Jan Krstič
Date: 27.06.2025
Revision:
Revision date:
Revision by:

| Profile | Material | Number | Length | Area | Weight |
|---|---|---|---|---|---|
| IPE240 | S355J2 | 1 | 10192 | 9,40 | 312,7 |
| **Sub total, IPE240** | | | **73758** | **68,0** | **2263** |
| IPE300 | S355J2 | 1 | 6930 | 8,03 | 292,7 |
| IPE300 | S355J2 | 1 | 6965 | 8,07 | 294,2 |
| IPE300 | S355J2 | 2 | 7075 | 8,20 | 298,8 |
| **Sub total, IPE300** | | | **28045** | **32,5** | **1184** |
| IPE400 | S355J2 | 4 | 2499 | 3,67 | 165,8 |
| IPE400 | S355J2 | 4 | 2751 | 4,04 | 182,5 |
| IPE400 | S355J2 | 4 | 9858 | 14,46 | 653,9 |
| IPE400 | S355J2 | 4 | 12643 | 18,55 | 838,6 |
| **Sub total, IPE400** | | | **111003** | **162,8** | **7363** |
| PL5X125 | S355J2 | 4 | 125 | 0,03 | 0,5 |
| **Sub total, PL5X125** | | | **500** | **0,1** | **2** |
| PL5X180 | S355J2 | 36 | 90 | 0,03 | 0,6 |
| **Sub total, PL5X180** | | | **3240** | **1,2** | **20** |
| PL6X60 | S355J2 | 1 | 2960 | 0,39 | 8,4 |
| PL6X60 | S355J2 | 4 | 6865 | 0,91 | 19,4 |
| **Sub total, PL6X60** | | | **30419** | **4,0** | **86** |
| PL10X42 | S355J2 | 16 | 162 | 0,02 | 0,5 |
| **Sub total, PL10X42** | | | **2592** | **0,3** | **8** |
| PL10X47 | S355J2 | 47 | 181 | 0,02 | 0,6 |
| **Sub total, PL10X47** | | | **8507** | **1,0** | **30** |
| PL10X56 | S355J2 | 12 | 218 | 0,03 | 0,9 |
| **Sub total, PL10X56** | | | **2621** | **0,4** | **11** |
| PL10X57 | S355J2 | 6 | 218 | 0,03 | 1,0 |
| **Sub total, PL10X57** | | | **1310** | **0,2** | **6** |
| PL10X70 | S355J2 | 14 | 125 | 0,02 | 0,7 |
| **Sub total, PL10X70** | | | **1750** | **0,3** | **10** |
| PL10X71 | S355J2 | 4 | 277 | 0,05 | 1,5 |
| **Sub total, PL10X71** | | | **1106** | **0,2** | **6** |
| PL10X75 | S355J2 | 18 | 140 | 0,03 | 0,8 |
| **Sub total, PL10X75** | | | **2520** | **0,5** | **15** |
| PL10X80 | S355J2 | 4 | 100 | 0,01 | 0,4 |
| PL10X80 | S355J2 | 28 | 112 | 0,02 | 0,7 |
| PL10X80 | S355J2 | 5 | 185 | 0,02 | 0,8 |
| **Sub total, PL10X80** | | | **4454** | **0,8** | **25** |
| PL10X90 | S355J2 | 6 | 150 | 0,03 | 1,1 |
| PL10X90 | S355J2 | 1 | 160 | 0,03 | 1,1 |
| PL10X90 | S355J2 | 6 | 228 | 0,05 | 1,6 |

RAZPON d.o.o.
Tehnološki park 20,
1000 Ljubljana

www.razpon.si

List contents: Jeklena Konstrukcija
Project name: SEVEROZAHODNA POKI
Project address: POMOZNIMI PROSTORI
STADIONA FAZANARIJA
Project number: P02/2025
Document number:

Author: Jan Krstič
Date: 27.06.2025
Revision:
Revision date:
Revision by:

| Profile | Material | Number | Length | Area | Weight |
|---|---|---|---|---|---|
| **Sub total, PL10X90** | | | **2428** | **0,5** | **17** |
| PL10X96 | S355J2 | 2 | 168 | 0,04 | 1,2 |
| PL10X96 | S355J2 | 1 | 255 | 0,06 | 1,9 |
| **Sub total, PL10X96** | | | **591** | **0,1** | **4** |
| PL10X100 | S355J2 | 32 | 200 | 0,05 | 1,6 |
| PL10X100 | S355J2 | 12 | 220 | 0,03 | 1,1 |
| PL10X100 | S355J2 | 1 | 400 | 0,09 | 3,1 |
| **Sub total, PL10X100** | | | **9440** | **1,9** | **66** |
| PL10X101 | S355J2 | 4 | 168 | 0,04 | 1,3 |
| **Sub total, PL10X101** | | | **672** | **0,2** | **5** |
| PL10X108 | S355J2 | 1 | 170 | 0,04 | 1,4 |
| PL10X108 | S355J2 | 1 | 230 | 0,06 | 1,9 |
| **Sub total, PL10X108** | | | **400** | **0,1** | **3** |
| PL10X120 | S355J2 | 9 | 160 | 0,04 | 1,5 |
| PL10X120 | S355J2 | 58 | 220 | 0,06 | 2,1 |
| **Sub total, PL10X120** | | | **14200** | **3,8** | **133** |
| PL10X125 | S355J2 | 2 | 125 | 0,04 | 1,2 |
| **Sub total, PL10X125** | | | **250** | **0,1** | **3** |
| PL10X135 | S355J2 | 56 | 140 | 0,04 | 1,5 |
| **Sub total, PL10X135** | | | **7840** | **2,4** | **83** |
| PL10X140 | S355J2 | 6 | 146 | 0,04 | 1,2 |
| PL10X140 | S355J2 | 1 | 185 | 0,06 | 2,0 |
| **Sub total, PL10X140** | | | **1060** | **0,3** | **10** |
| PL10X142 | S355J2 | 8 | 167 | 0,04 | 1,4 |
| **Sub total, PL10X142** | | | **1338** | **0,3** | **11** |
| PL10X143 | S355J2 | 2 | 158 | 0,04 | 1,3 |
| **Sub total, PL10X143** | | | **316** | **0,1** | **3** |
| PL10X150 | S355J2 | 1 | 90 | 0,03 | 1,1 |
| **Sub total, PL10X150** | | | **90** | **0,0** | **1** |
| PL10X153 | S355J2 | 2 | 159 | 0,04 | 1,4 |
| PL10X153 | S355J2 | 1 | 369 | 0,11 | 3,9 |
| **Sub total, PL10X153** | | | **686** | **0,2** | **7** |
| PL10X154 | S355J2 | 1 | 377 | 0,11 | 4,0 |
| **Sub total, PL10X154** | | | **377** | **0,1** | **4** |
| PL10X155 | S355J2 | 8 | 140 | 0,04 | 1,4 |
| **Sub total, PL10X155** | | | **1122** | **0,3** | **11** |
| PL10X158 | S355J2 | 1 | 218 | 0,05 | 1,8 |
| PL10X158 | S355J2 | 1 | 447 | 0,14 | 5,0 |

RAZPON d.o.o.
Tehnološki park 20,
1000 Ljubljana

www.razpon.si

List contents: Jeklena Konstrukcija
Project name: SEVEROZAHODNA POKI
Project address: POMOZNIMI PROSTORI
STADIONA FAZANARIJA
Project number: P02/2025
Document number:

Author: Jan Krstič
Date: 27.06.2025
Revision:
Revision date:
Revision by:

| Profile | Material | Number | Length | Area | Weight |
|---|---|---|---|---|---|
| **Sub total, PL10X158** | | | **665** | **0,2** | **7** |
| PL10X159 | S355J2 | 1 | 498 | 0,16 | 5,7 |
| **Sub total, PL10X159** | | | **498** | **0,2** | **6** |
| PL10X170 | S355J2 | 2 | 178 | 0,07 | 2,4 |
| **Sub total, PL10X170** | | | **356** | **0,1** | **5** |
| PL10X178 | S355J2 | 5 | 138 | 0,05 | 1,6 |
| PL10X178 | S355J2 | 1 | 173 | 0,06 | 2,0 |
| **Sub total, PL10X178** | | | **866** | **0,3** | **10** |
| PL10X180 | S355J2 | 18 | 90 | 0,04 | 1,3 |
| PL10X180 | S355J2 | 1 | 120 | 0,05 | 1,7 |
| PL10X180 | S355J2 | 8 | 474 | 0,18 | 6,7 |
| **Sub total, PL10X180** | | | **5530** | **2,2** | **78** |
| PL10X194 | S355J2 | 2 | 154 | 0,05 | 1,9 |
| **Sub total, PL10X194** | | | **309** | **0,1** | **4** |
| PL10X200 | S355J2 | 1 | 100 | 0,05 | 1,6 |
| PL10X200 | S355J2 | 16 | 120 | 0,05 | 1,9 |
| **Sub total, PL10X200** | | | **2020** | **0,9** | **32** |
| PL10X240 | S355J2 | 8 | 120 | 0,06 | 2,3 |
| **Sub total, PL10X240** | | | **960** | **0,5** | **18** |
| PL10X242 | S355J2 | 1 | 261 | 0,10 | 3,6 |
| PL10X242 | S355J2 | 1 | 272 | 0,10 | 3,7 |
| **Sub total, PL10X242** | | | **533** | **0,2** | **7** |
| PL10X243 | S355J2 | 2 | 251 | 0,10 | 3,5 |
| PL10X243 | S355J2 | 2 | 261 | 0,12 | 4,3 |
| **Sub total, PL10X243** | | | **1026** | **0,4** | **16** |
| PL10X244 | S355J2 | 1 | 265 | 0,11 | 4,1 |
| PL10X244 | S355J2 | 1 | 278 | 0,12 | 4,3 |
| **Sub total, PL10X244** | | | **543** | **0,2** | **9** |
| PL12X110 | S355J2 | 2 | 449 | 0,11 | 4,6 |
| **Sub total, PL12X110** | | | **899** | **0,2** | **9** |
| PL15X40 | S355J2 | 4 | 218 | 0,02 | 1,0 |
| **Sub total, PL15X40** | | | **874** | **0,1** | **4** |
| PL15X60 | S355J2 | 16 | 240 | 0,03 | 1,2 |
| **Sub total, PL15X60** | | | **3840** | **0,5** | **19** |
| PL15X86 | S355J2 | 8 | 370 | 0,08 | 3,7 |
| **Sub total, PL15X86** | | | **2961** | **0,6** | **30** |
| PL15X90 | S355J2 | 1 | 180 | 0,03 | 1,2 |
| PL15X90 | S355J2 | 24 | 200 | 0,03 | 1,4 |

RAZPON d.o.o.
Tehnološki park 20,
1000 Ljubljana

www.razpon.si

List contents: Jeklena Konstrukcija
Project name: SEVEROZAHODNA POKI
Project address: POMOZNIMI PROSTORI
STADIONA FAZANARIJA
Project number: P02/2025
Document number:

Author: Jan Krstič
Date: 27.06.2025
Revision:
Revision date:
Revision by:

| Profile | Material | Number | Length | Area | Weight |
|---|---|---|---|---|---|
| **Sub total, PL15X90** | | | **4980** | **0,8** | **34** |
| PL15X95 | S355J2 | 1 | 370 | 0,08 | 4,1 |
| PL15X95 | S355J2 | 1 | 490 | 0,11 | 5,5 |
| **Sub total, PL15X95** | | | **861** | **0,2** | **10** |
| PL15X96 | S355J2 | 15 | 168 | 0,04 | 1,8 |
| **Sub total, PL15X96** | | | **2520** | **0,6** | **27** |
| PL15X100 | S355J2 | 18 | 188 | 0,05 | 2,2 |
| PL15X100 | S355J2 | 1 | 200 | 0,03 | 1,5 |
| PL15X100 | S355J2 | 34 | 210 | 0,05 | 2,5 |
| PL15X100 | S355J2 | 32 | 240 | 0,04 | 1,8 |
| **Sub total, PL15X100** | | | **18404** | **3,9** | **183** |
| PL15X101 | S355J2 | 18 | 168 | 0,04 | 2,0 |
| **Sub total, PL15X101** | | | **3024** | **0,8** | **36** |
| PL15X105 | S355J2 | 12 | 210 | 0,05 | 2,6 |
| **Sub total, PL15X105** | | | **2520** | **0,6** | **31** |
| PL15X108 | S355J2 | 1 | 420 | 0,11 | 5,3 |
| **Sub total, PL15X108** | | | **420** | **0,1** | **5** |
| PL15X109 | S355J2 | 1 | 342 | 0,09 | 4,3 |
| PL15X109 | S355J2 | 1 | 531 | 0,13 | 6,7 |
| **Sub total, PL15X109** | | | **873** | **0,2** | **11** |
| PL15X110 | S355J2 | 2 | 228 | 0,06 | 3,0 |
| **Sub total, PL15X110** | | | **456** | **0,1** | **6** |
| PL15X115 | S355J2 | 6 | 204 | 0,06 | 2,7 |
| **Sub total, PL15X115** | | | **1224** | **0,3** | **16** |
| PL15X116 | S355J2 | 2 | 204 | 0,05 | 2,7 |
| **Sub total, PL15X116** | | | **408** | **0,1** | **5** |
| PL15X120 | S355J2 | 1 | 185 | 0,05 | 2,6 |
| PL15X120 | S355J2 | 1 | 200 | 0,04 | 1,7 |
| PL15X120 | S355J2 | 4 | 228 | 0,07 | 3,2 |
| PL15X120 | S355J2 | 2 | 280 | 0,08 | 4,0 |
| **Sub total, PL15X120** | | | **1857** | **0,5** | **25** |
| PL15X125 | S355J2 | 32 | 222 | 0,06 | 3,2 |
| PL15X125 | S355J2 | 78 | 223 | 0,06 | 3,2 |
| **Sub total, PL15X125** | | | **24495** | **7,0** | **348** |
| PL15X130 | S355J2 | 4 | 200 | 0,06 | 3,1 |
| **Sub total, PL15X130** | | | **800** | **0,3** | **12** |
| PL15X140 | S355J2 | 2 | 210 | 0,07 | 3,5 |
| PL15X140 | S355J2 | 2 | 260 | 0,08 | 4,3 |
| PL15X140 | S355J2 | 5 | 280 | 0,09 | 4,6 |

RAZPON d.o.o.
Tehnološki park 20,
1000 Ljubljana

www.razpon.si

List contents: Jeklena Konstrukcija
Project name: SEVEROZAHODNA POKI
Project address: POMOZNIMI PROSTORI
STADIONA FAZANARIJA
Project number: P02/2025
Document number:

Author: Jan Krstič
Date: 27.06.2025
Revision:
Revision date:
Revision by:

| Profile | Material | Number | Length | Area | Weight |
|---|---|---|---|---|---|
| PL15X140 | S355J2 | 8 | 308 | 0,06 | 3,0 |
| PL15X140 | S355J2 | 12 | 310 | 0,06 | 2,9 |
| PL15X140 | S355J2 | 1 | 335 | 0,11 | 5,5 |
| **Sub total, PL15X140** | | | **8863** | **2,1** | **104** |
| PL15X145 | S355J2 | 4 | 260 | 0,09 | 4,4 |
| **Sub total, PL15X145** | | | **1040** | **0,4** | **18** |
| PL15X150 | S355J2 | 4 | 174 | 0,06 | 3,1 |
| PL15X150 | S355J2 | 6 | 300 | 0,07 | 3,2 |
| **Sub total, PL15X150** | | | **2496** | **0,6** | **31** |
| PL15X180 | S355J2 | 4 | 381 | 0,15 | 8,1 |
| **Sub total, PL15X180** | | | **1523** | **0,6** | **32** |
| PL15X190 | S355J2 | 16 | 370 | 0,16 | 8,2 |
| PL15X190 | S355J2 | 16 | 371 | 0,16 | 8,2 |
| **Sub total, PL15X190** | | | **11862** | **5,0** | **262** |
| PL15X200 | S355J2 | 1 | 178 | 0,08 | 4,2 |
| PL15X200 | S355J2 | 4 | 210 | 0,10 | 4,9 |
| PL15X200 | S355J2 | 4 | 310 | 0,14 | 7,3 |
| **Sub total, PL15X200** | | | **2258** | **1,0** | **53** |
| PL15X215 | S355J2 | 7 | 120 | 0,06 | 3,0 |
| PL15X215 | S355J2 | 7 | 240 | 0,12 | 6,1 |
| **Sub total, PL15X215** | | | **2520** | **1,3** | **64** |
| PL15X228 | S355J2 | 2 | 178 | 0,09 | 4,8 |
| **Sub total, PL15X228** | | | **356** | **0,2** | **10** |
| PL15X240 | S355J2 | 1 | 218 | 0,09 | 3,9 |
| **Sub total, PL15X240** | | | **218** | **0,1** | **4** |
| PL15X260 | S355J2 | 4 | 240 | 0,14 | 7,3 |
| **Sub total, PL15X260** | | | **960** | **0,6** | **29** |
| PL20X130 | S355J2 | 12 | 335 | 0,11 | 6,8 |
| **Sub total, PL20X130** | | | **4020** | **1,3** | **82** |
| PL20X160 | S355J2 | 1 | 360 | 0,14 | 9,0 |
| PL20X160 | S355J2 | 1 | 400 | 0,15 | 10,0 |
| PL20X160 | S355J2 | 6 | 445 | 0,17 | 11,2 |
| **Sub total, PL20X160** | | | **3430** | **1,3** | **86** |
| PL20X172 | S355J2 | 1 | 250 | 0,10 | 6,8 |
| **Sub total, PL20X172** | | | **250** | **0,1** | **7** |
| PL20X197 | S355J2 | 4 | 210 | 0,10 | 6,5 |
| **Sub total, PL20X197** | | | **840** | **0,4** | **26** |
| PL20X210 | S355J2 | 28 | 240 | 0,12 | 7,9 |
| **Sub total, PL20X210** | | | **6720** | **3,3** | **222** |

RAZPON d.o.o.
Tehnološki park 20,
1000 Ljubljana

www.razpon.si

List contents: Jeklena Konstrukcija
Project name: SEVEROZAHODNA POKI
Project address: POMOZNIMI PROSTORI
STADIONA FAZANARIJA
Project number: P02/2025
Document number:

Author: Jan Krstič
Date: 27.06.2025
Revision:
Revision date:
Revision by:

| Profile | Material | Number | Length | Area | Weight |
|---|---|---|---|---|---|
| PL20X212 | S355J2 | 2 | 740 | 0,35 | 24,6 |
| **Sub total, PL20X212** | | | **1480** | **0,7** | **49** |
| PL20X220 | S355J2 | 34 | 500 | 0,25 | 17,3 |
| **Sub total, PL20X220** | | | **17000** | **8,5** | **587** |
| PL20X240 | S355J2 | 2 | 210 | 0,12 | 7,9 |
| **Sub total, PL20X240** | | | **420** | **0,2** | **16** |
| PL20X245 | S355J2 | 2 | 240 | 0,14 | 9,2 |
| **Sub total, PL20X245** | | | **480** | **0,3** | **19** |
| PL20X250 | S355J2 | 1 | 172 | 0,10 | 6,8 |
| **Sub total, PL20X250** | | | **172** | **0,1** | **7** |
| PL20X251 | S355J2 | 8 | 305 | 0,14 | 9,4 |
| **Sub total, PL20X251** | | | **2439** | **1,1** | **75** |
| PL20X269 | S355J2 | 4 | 313 | 0,13 | 8,9 |
| PL20X269 | S355J2 | 4 | 341 | 0,15 | 10,4 |
| **Sub total, PL20X269** | | | **2616** | **1,2** | **77** |
| PL20X286 | S355J2 | 8 | 560 | 0,26 | 17,8 |
| **Sub total, PL20X286** | | | **4480** | **2,1** | **143** |
| PL20X296 | S355J2 | 8 | 486 | 0,23 | 15,9 |
| **Sub total, PL20X296** | | | **3891** | **1,8** | **127** |
| PL20X302 | S355J2 | 10 | 498 | 0,21 | 14,2 |
| **Sub total, PL20X302** | | | **4975** | **2,1** | **142** |
| PL20X303 | S355J2 | 8 | 532 | 0,22 | 15,0 |
| **Sub total, PL20X303** | | | **4253** | **1,8** | **120** |
| PL20X304 | S355J2 | 8 | 501 | 0,23 | 15,8 |
| **Sub total, PL20X304** | | | **4005** | **1,8** | **127** |
| PL20X380 | S355J2 | 2 | 240 | 0,21 | 14,3 |
| **Sub total, PL20X380** | | | **480** | **0,4** | **29** |
| PL20X482 | S355J2 | 8 | 528 | 0,30 | 20,9 |
| PL20X482 | S355J2 | 2 | 699 | 0,33 | 22,9 |
| **Sub total, PL20X482** | | | **5624** | **3,0** | **213** |
| PL25X180 | S355J2 | 20 | 535 | 0,23 | 18,9 |
| **Sub total, PL25X180** | | | **10700** | **4,6** | **378** |
| PL25X200 | S355J2 | 4 | 220 | 0,11 | 8,6 |
| **Sub total, PL25X200** | | | **880** | **0,4** | **35** |
| PL30X300 | S355J2 | 4 | 220 | 0,16 | 15,5 |
| **Sub total, PL30X300** | | | **880** | **0,7** | **62** |

RAZPON d.o.o.
Tehnološki park 20,
1000 Ljubljana

www.razpon.si

List contents: Jeklena Konstrukcija
Project name: SEVEROZAHODNA POKI
Project address: POMOZNIMI PROSTORI
STADIONA FAZANARIJA
Project number: P02/2025
Document number:

Author: Jan Krstič
Date: 27.06.2025
Revision:
Revision date:
Revision by:

| Profile | Material | Number | Length | Area | Weight |
|---|---|---|---|---|---|
| PL30X340 | S355J2 | 9 | 340 | 0,27 | 27,2 |
| **Sub total, PL30X340** | | | **3060** | **2,5** | **245** |
| PL30X440 | S355J2 | 4 | 440 | 0,44 | 45,6 |
| **Sub total, PL30X440** | | | **1760** | **1,8** | **182** |
| PL50X600 | S355J2 | 8 | 600 | 0,84 | 141,3 |
| **Sub total, PL50X600** | | | **4800** | **6,7** | **1130** |
| RHS80X4 | S235J2 | 7 | 1000 | 0,31 | 9,2 |
| RHS80X4 | S235J2 | 1 | 1429 | 0,43 | 12,7 |
| RHS80X4 | S235J2 | 4 | 2058 | 0,64 | 18,9 |
| RHS80X4 | S235J2 | 4 | 2060 | 0,64 | 18,9 |
| RHS80X4 | S235J2 | 4 | 2757 | 0,85 | 25,3 |
| RHS80X4 | S235J2 | 4 | 2815 | 0,87 | 25,9 |
| RHS80X4 | S235J2 | 2 | 2919 | 0,90 | 26,8 |
| RHS80X4 | S235J2 | 1 | 2955 | 0,91 | 27,2 |
| RHS80X4 | S235J2 | 1 | 3052 | 0,94 | 27,9 |
| RHS80X4 | S235J2 | 1 | 3057 | 0,94 | 28,0 |
| RHS80X4 | S235J2 | 14 | 3308 | 1,02 | 30,4 |
| RHS80X4 | S355J2 | 2 | 3464 | 1,07 | 31,7 |
| **Sub total, RHS80X4** | | | **115331** | **35,7** | **1059** |
| RHS120*5 | S235J2 | 1 | 3404 | 1,60 | 61,2 |
| **Sub total, RHS120*5** | | | **3404** | **1,6** | **61** |
| **Total:** | | | | **1397,5** | **57821** |